AUTHENTICATED
U.S. GOVERNMENT
INFORMATION
GPO

Federal Register

5–12–00 Friday
Vol. 65 No. 93 May 12, 2000
Pages 30521–30828

Editorial Note: In the issue of Tuesday, May 9, 2000 page 26931 should read 26931-29931.

The **FEDERAL REGISTER** is published daily, Monday through Friday, except official holidays, by the Office of the Federal Register, National Archives and Records Administration, Washington, DC 20408, under the Federal Register Act (44 U.S.C. Ch. 15) and the regulations of the Administrative Committee of the Federal Register (1 CFR Ch. I). The Superintendent of Documents, U.S. Government Printing Office, Washington, DC 20402 is the exclusive distributor of the official edition.

The **Federal Register** provides a uniform system for making available to the public regulations and legal notices issued by Federal agencies. These include Presidential proclamations and Executive Orders, Federal agency documents having general applicability and legal effect, documents required to be published by act of Congress, and other Federal agency documents of public interest.

Documents are on file for public inspection in the Office of the Federal Register the day before they are published, unless the issuing agency requests earlier filing. For a list of documents currently on file for public inspection, see http://www.nara.gov/fedreg.

The seal of the National Archives and Records Administration authenticates the Federal Register as the official serial publication established under the Federal Register Act. Under 44 U.S.C. 1507, the contents of the **Federal Register** shall be judicially noticed.

The **Federal Register** is published in paper and on 24x microfiche. It is also available online at no charge as one of the databases on GPO Access, a service of the U.S. Government Printing Office.

The online edition of the **Federal Register** is issued under the authority of the Administrative Committee of the Federal Register as the official legal equivalent of the paper and microfiche editions (44 U.S.C. 4101 and 1 CFR 5.10). It is updated by 6 a.m. each day the **Federal Register** is published and it includes both text and graphics from Volume 59, Number 1 (January 2, 1994) forward.

GPO Access users can choose to retrieve online **Federal Register** documents as TEXT (ASCII text, graphics omitted), PDF (Adobe Portable Document Format, including full text and all graphics), or SUMMARY (abbreviated text) files. Users should carefully check retrieved material to ensure that documents were properly downloaded.

On the World Wide Web, connect to the **Federal Register** at http://www.access.gpo.gov/nara. Those without World Wide Web access can also connect with a local WAIS client, by Telnet to swais.access.gpo.gov, or by dialing (202) 512-1661 with a computer and modem. When using Telnet or modem, type swais, then log in as guest with no password.

For more information about GPO Access, contact the GPO Access User Support Team by E-mail at gpoaccess@gpo.gov; by fax at (202) 512–1262; or call (202) 512–1530 or 1–888–293–6498 (toll free) between 7 a.m. and 5 p.m. Eastern time, Monday–Friday, except Federal holidays.

The annual subscription price for the **Federal Register** paper edition is $638, or $697 for a combined **Federal Register,** Federal Register Index and List of CFR Sections Affected (LSA) subscription; the microfiche edition of the **Federal Register** including the Federal Register Index and LSA is $253. Six month subscriptions are available for one-half the annual rate. The charge for individual copies in paper form is $9.00 for each issue, or $9.00 for each group of pages as actually bound; or $2.00 for each issue in microfiche form. All prices include regular domestic postage and handling. International customers please add 25% for foreign handling. Remit check or money order, made payable to the Superintendent of Documents, or charge to your GPO Deposit Account, VISA, MasterCard or Discover. Mail to: New Orders, Superintendent of Documents, P.O. Box 371954, Pittsburgh, PA 15250–7954.

There are no restrictions on the republication of material appearing in the **Federal Register.**

How To Cite This Publication: Use the volume number and the page number. Example: 65 FR 12345.

Printed on recycled paper.

SUBSCRIPTIONS AND COPIES

PUBLIC	
Subscriptions:	
Paper or fiche	**202–512–1800**
Assistance with public subscriptions	**512–1806**
General online information	**202–512–1530; 1–888–293–6498**
Single copies/back copies:	
Paper or fiche	**512–1800**
Assistance with public single copies	**512–1803**
FEDERAL AGENCIES	
Subscriptions:	
Paper or fiche	**523–5243**
Assistance with Federal agency subscriptions	**523–5243**

FEDERAL REGISTER WORKSHOP

THE FEDERAL REGISTER: WHAT IT IS AND HOW TO USE IT

FOR: Any person who uses the Federal Register and Code of Federal Regulations.

WHO: Sponsored by the Office of the Federal Register.

WHAT: Free public briefings (approximately 3 hours) to present:

1. The regulatory process, with a focus on the Federal Register system and the public's role in the development regulations.
2. The relationship between the Federal Register and Code of Federal Regulations.
3. The important elements of typical Federal Register documents.
4. An introduction to the finding aids of the FR/CFR system.

WHY: To provide the public with access to information necessary to research Federal agency regulations which directly affect them. There will be no discussion of specific agency regulations.

WASHINGTON, DC

WHEN: May 23, 2000 at 9:00 am.

WHERE: Office of the Federal Register
Conference Room, Suite 700
800 North Capitol Street, NW.
Washington, DC
(3 blocks north of Union Station Metro)

RESERVATIONS: 202–523–4538

Contents

Federal Register

Vol. 65, No. 93

Friday, May 12, 2000

Agricultural Marketing Service
RULES
Raisins produced from grapes grown in—
California, 30525–30527

Agriculture Department
See Agricultural Marketing Service
See Forest Service
NOTICES
Agency information collection activities:
Submission for OMB review; comment request, 30560–30562

Alcohol, Tobacco and Firearms Bureau
NOTICES
Agency information collection activities:
Proposed collection; comment request, 30668–30673

Antitrust Division
NOTICES
National cooperative research notifications:
Application Service Provider Industry Consortium, Inc., 30609–30610
Center for Waste Reduction Technologies, 30610
IAP Research, Inc., 30610
Management of Accelerated Technology Insertion II, 30610–30611
Multiservice Switching Forum, 30611
Petroleum Environmental Research Forum, 30611
Petrotechnical Open Software Corp., 30612
Rotorcraft Technology Association, Inc., 30612
Secure Digital Music Initiative, 30612
United Technologies Research Center, 30612–30613
Water Heater Industry Joint Research and Development Consortium, 30613

Army Department
See Engineers Corps

Blind or Severely Disabled, Committee for Purchase From People Who Are
See Committee for Purchase From People Who Are Blind or Severely Disabled

Commerce Department
See International Trade Administration
See National Oceanic and Atmospheric Administration
NOTICES
Agency information collection activities:
Submission for OMB review; comment request, 30563–30564

Committee for Purchase From People Who Are Blind or Severely Disabled
NOTICES
Procurement list; additions and deletions, 30562–30563

Committee for the Implementation of Textile Agreements
NOTICES
Cotton, wool, and man-made textiles:
Belarus, 30572
Cambodia, 30571
Nepal, 30570–30571
Romania, 30572

Corporation for National and Community Service
NOTICES
Grants and cooperative agreements; availability, etc.:
AmeriCorps* programs—
AmeriCorps State Competitive and National programs, and Learn and Serve America K-12 School-based programs, 30572–30573

Customs Service
PROPOSED RULES
Educational and scientific institutions; instruments and apparatus:
Florence Agreement Program; procedures changes, 30555–30558

Defense Department
See Engineers Corps
NOTICES
Reciprocal procurement memoranda of understanding; implementation reviews, 30573

Drug Enforcement Administration
RULES
Schedules of controlled substances:
Gamma-hydroxybutyric acid; placement into Schedule I, 30541–30542
NOTICES
Applications, hearings, determinations, etc.:
Abud-Sanchez, Danilo, M.D., 30613
Doughton, Robert P., M.D., 30614
Dupont Pharmaceuticals, 30614
Johnson Matthey, Inc., 30614–30615
Lifepoint, Inc., 30615
Lipomed, Inc., 30615–30616
Mallinckrodt, Inc., 30616
Redard, Edson W., M.D., 30616–30619

Education Department
NOTICES
Grants and cooperative agreements; availability, etc.:
Career Resource Network State Grants, 30797–30820
Indian education programs—
Even Start Family Literacy Program, 30574–30575
Special education and rehabilitative services:
Blind vending facilities under Randolph-Sheppard Act—Arbitration panel decisions, 30575–30577

Employment and Training Administration
NOTICES
Grants and cooperative agreements; availability, etc.:
Quality Child Care Initiative, 30623–30630
Workforce Investment Act; implementation:
Lower living standard income level determination, 30630–30636

Employment Standards Administration
NOTICES
Minimum wages for Federal and federally-assisted construction; general wage determination decisions, 30637–30638

Energy Department
See Federal Energy Regulatory Commission
NOTICES
Meetings:
Secretary of Energy Advisory Board, 30577–30578

Engineers Corps
NOTICES
Environmental statements; notice of intent:
Marshall and Livingston Counties, KY; Kentucky Lock Addition Project, 30573–30574

Environmental Protection Agency
RULES
Pesticides; tolerances in food, animal feeds, and raw agricultural commodities:
Dicamba, 30543–30545
Water pollution control:
Ocean dumping; disposal sites management criteria; CFR correction, 30545
NOTICES
Agency information collection activities:
Proposed collection; comment request, 30585
Committees; establishment, renewal, termination, etc.:
EPA-USDA Committee to Advise on Reassessment and Transition, 30585–30586
Confidential business information and data transfer, 30586–30587
Environmental statements; availability, etc.:
Agency statements—
Comment availability, 30587
Weekly receipts, 30587
Environmental statements; notice of intent:
Meramec River and Wetlands Protection Project, MO, 30587–30588
Grants and cooperative agreements; availability, etc.:
Chesapeake Bay Program, 30588
Meetings:
National Strategy to Develop Regional Nutrient Criteria; stakeholders, 30588–30589
Science Advisory Board, 30589–30591
Pesticide, food, and feed additive petitions:
Zeneca Ag Products, 30591–30596

Executive Office of the President
See Presidential Commission on Assignment of Women in the Armed Forces
See Presidential Documents

Federal Aviation Administration
RULES
Airworthiness directives:
Airbus, 30536–30537
Boeing, 30532–30534
Empresa Brasileira de Aeronautica S.A. (EMBRAER), 30539–30541
Fokker, 30529–30531
McDonnell Douglas, 30534–30536
Raytheon, 30538–30539
Rolls-Royce plc, 30527–30529
Class E airspace; correction, 30541
PROPOSED RULES
Airworthiness directives:
Boeing, 30553–30555
Class D and Class E airspace; correction, 30678
Class E airspace; correction, 30678

Federal Communications Commission
RULES
Radio stations; table of assignments:
Wyoming and Colorado, 30547
PROPOSED RULES
Radio stations; table of assignments:
Michigan, 30558–30559
NOTICES
Agency information collection activities:
Proposed collection; comment request, 30596–30597
Reporting and recordkeeping requirements, 30597
Submission for OMB review; comment request, 30597–30598
Common carrier services:
Wireless telecommunications services—
700 MHz guard bands; licenses auction postponed, 30598
Fixed, mobile, and broadcasting services in 747-762 and 777-792 MHz bands; licenses auction postponed, 30598
Digital television stations; table of assignments:
Illinois, 30599

Federal Emergency Management Agency
RULES
Flood insurance; communities eligible for sale:
Various States, 30545–30547
NOTICES
Disaster and emergency areas:
Maine, 30599
Maryland, 30599–30600
Reports and guidance documents; availability, etc.:
Flood insurance program; call for issues, 30600

Federal Energy Regulatory Commission
NOTICES
Hydroelectric applications, 30583–30585
Applications, hearings, determinations, etc.:
Amoco Energy Trading Corp. et al., 30578
ANP Bellingham Energy Co., 30578–30579
ANP Blackstone Energy Co., 30579
CinCap VII, LLC, et al., 30579
Duke Energy Trenton, LLC, 30579–30580
Duke Energy Vermillion, LLC, et al., 30580
Indeck Colorado, LLC, 30580–30581
Indeck-Rockford, L.L.C., 30581
Iroquois Gas Transmission System, L.P., 30581–30582
Panda Gila River, L.P., et al., 30582
Rainy River Energy Corp., 30582–30583
Western New York Wind Corp., 30583

Federal Maritime Commission
NOTICES
Ocean transportation intermediary licenses:
Pactrans Marine, Inc., 30600

Federal Procurement Policy Office
NOTICES
Government contracts; maximum benchmark compensation determination, 30640

Fish and Wildlife Service
RULES
National Wildlife Refuge System:
Hunting and fishing—
Refuge-specific regulations, 30771–30795

NOTICES
Comprehensive conservation plans; availability, etc.:
Cedar Island and Pea Island National Wildlife Refuges, NC, 30603
Pelican Island National Wildlife Refuge et al., FL, 30603–30604
St. Marks National Wildlife Refuge, FL; correction, 30678
Endangered and threatened species:
Recovery plans—
California red-legged frog, 30604–30605
Endangered and threatened species permit applications, 30604

Forest Service
NOTICES
Appealable decisions; legal notice:
Northern Region, 30562

Health and Human Services Department
NOTICES
Organization, functions, and authority delegations:
Public Health and Science Office, 30600–30601

Housing and Urban Development Department
RULES
Community facilities:
Supportive Housing Program; operating cost percentage increase, 30821–30823
NOTICES
Agency information collection activities:
Proposed collection; comment request, 30601–30602
Grants and cooperative agreements; availability, etc.:
Facilities to assist homeless—
Excess and surplus Federal property, 30603

Indian Affairs Bureau
NOTICES
Environmental statements; availability, etc.:
Navajo Nation, AZ and NV; Navajo Ten-Year Forest Management Plan
Correction, 30605
Tribal-State Compacts approval; Class III (casino) gambling:
Choctaw Nation, OK, 30605
Confederated Salish and Kootenai Tribes, MT, 30605–30606
Tunica-Biloxi Tribe, LA, 30606

Interior Department
See Fish and Wildlife Service
See Indian Affairs Bureau
See Land Management Bureau
See National Park Service

Internal Revenue Service
NOTICES
Agency information collection activities:
Proposed collection; comment request, 30673–30677

International Trade Administration
PROPOSED RULES
Educational and scientific institutions; instruments and apparatus:
Florence Agreement Program; procedures changes, 30555–30558
NOTICES
Export trade certificates of review, 30564
Overseas trade missions:
2000 trade missions—
Business development trade mission to Egypt, Kenya, and South Africa, 30564–30565

Justice Department
See Antitrust Division
See Drug Enforcement Administration
See National Institute of Corrections
See Prisons Bureau
NOTICES
Pollution control; consent judgments:
Atkemix Thirty-Seven, Inc., et al., 30609

Labor Department
See Employment and Training Administration
See Employment Standards Administration
See Occupational Safety and Health Administration

Land Management Bureau
NOTICES
Committees; establishment, renewal, termination, etc.:
Central California Resource Advisory Council, 30606
Public land orders:
Oregon, 30606–30607
Survey plat filings:
Florida, 30607
New Mexico, 30607

Management and Budget Office
See Federal Procurement Policy Office

National Aeronautics and Space Administration
NOTICES
Patent licenses; non-exclusive, exclusive, or partially exclusive:
Access, LLC, 30640
Cognitive Technologies, LLC, 30640–30641
CyberLearning Technologies, Inc., 30641
East3.com, LLC, 30641
Meridian Holdings, Inc., 30641

National Highway Traffic Safety Administration
RULES
Motor vehicle safety standards:
Occupant crash protection—
Future air bags designed to create less risk of serious injuries for small women and young children and provide improved frontal crash protection, 30679–30770

National Institute of Corrections
NOTICES
Grants and cooperative agreements; availability, etc.:
Institutional culture assessment, 30619–30621
Transition from prison to community, 30621–30622

National Oceanic and Atmospheric Administration
RULES
Fishery conservation and management:
Alaska; fisheries of Excluive Economic Zone—
License Limitation Program; correction, 30549
Caribbean, Gulf, and South Atlantic fisheries—
Gulf of Mexico shrimp, 30547–30548
Northeastern United States fisheries—
Northeast multispecies; correction, 30548–30549

PROPOSED RULES
Fishery conservation and management:
Alaska; fisheries of Exclusive Economic Zone—Gulf of Alaska groundfish, 30559
NOTICES
Environmental statements; availability, etc.:
Point Comfort, TX; Alcoa Point Comfort/Lavaca Bay NPL Site recreational fishing service losses; damage assessment and restoration plan, 30565–30566
Grants and cooperative agreements; availability, etc.:
Southeast Bering Sea Carrying Capacity Research Project, 30566–30570

National Park Service
NOTICES
Environmental statements; availability, etc.:
Death Valley National Park, CA; Timbisha Shoshone Homeland, 30607–30608
Reports and guidance documents; availability, etc.:
Yosemite National Park, El Portal Administrative Site, CA; leasing regulations/guidelines, 30608–30609

National Science Foundation
NOTICES
Antarctic Conservation Act of 1978; permit applications, etc., 30641–30642

National Transportation Safety Board
NOTICES
Meetings; Sunshine Act, 30642

Nuclear Regulatory Commission
PROPOSED RULES
Rulemaking petitions:
Epstein, Eric Joesph, 30550–30553
NOTICES
Applications, hearings, determinations, etc.:
Portland General Electric Co. et al., 30642–30643

Occupational Safety and Health Administration
NOTICES
Nationally recognized testing laboratories, etc.:
SGS U.S. Testing Company, Inc., 30638–30640

Personnel Management Office
NOTICES
Privacy Act:
Systems of records, 30643–30644

Presidential Commission on Assignment of Women in the Armed Forces
RULES
CFR Chapter removed, 30542–30543

Presidential Documents
PROCLAMATIONS
Special observances:
Mother's Day (Proc. 7305), 30827–30828
EXECUTIVE ORDERS
Africa, sub-Saharan; granting access to HIV/AIDS pharmaceuticals and medical technologies (EO 13155), 30521–30523

Prisons Bureau
NOTICES
Environmental statements; notice of intent:
Criminal alien population in non-Federal low-security correctional facilities; cancellation, 30622
Northumberland County, PA; medium-security Federal correctional institution development, 30622–30623

Securities and Exchange Commission
NOTICES
Agency information collection activities:
Proposed collection; comment request, 30644–30646
Self-regulatory organizations; proposed rule changes:
Pacific Exchange, Inc., 30654–30666
Philadelphia Stock Exchange, Inc., 30666–30667
Applications, hearings, determinations, etc.:
Allianz Life Insurance Co. of North America et al., 30646–30650
Public utility holding company filings, 30650–30651
Valley Forge Life Insurance Co. et al., 30651–30654

Surface Transportation Board
NOTICES
Railroad services abandonment:
Burlington Northern & Santa Fe Railway Co., 30668

Tennessee Valley Authority
NOTICES
Agency information collection activities:
Submission for OMB review; comment request, 30667–30668

Textile Agreements Implementation Committee
See Committee for the Implementation of Textile Agreements

Thrift Supervision Office
RULES
Operations:
Government securities transfer and repurchase Effective date, 30527

Transportation Department
See Federal Aviation Administration
See National Highway Traffic Safety Administration
See Surface Transportation Board

Treasury Department
See Alcohol, Tobacco and Firearms Bureau
See Customs Service
See Internal Revenue Service
See Thrift Supervision Office

Separate Parts In This Issue

Part II
Department of Transportation, National Highway Transportation Safety Administration, 30679–30770

Part III
Department of Interior, Fish and Wildlife Service, 30771–30795

Part IV
Department of Education, 30797–30820

Part V
Department of Housing and Urban Development, 30821–30823

Part VI
The President, 30825–30828

Reader Aids

Consult the Reader Aids section at the end of this issue for phone numbers, online resources, finding aids, reminders, and notice of recently enacted public laws.

CFR PARTS AFFECTED IN THIS ISSUE

A cumulative list of the parts affected this month can be found in the Reader Aids section at the end of this issue.

3 CFR

Proclamations:

7305 30827

Executive Orders:

13155 30521

7 CFR

989 30525

10 CFR

Proposed Rules:

50 30550

12 CFR

563 30527
563c 30527
563g 30527

14 CFR

39 (7 documents) 30527, 30529, 30532, 30534, 30536, 30538, 30539
71 30541

Proposed Rules:

39 30553
71 (2 documents) 30678

15 CFR

Proposed Rules:

301 30555

21 CFR

1301 30541

24 CFR

583 30822

32 CFR

Ch. XXIX 30542

40 CFR

180 30543
228 30545

44 CFR

64 30545

47 CFR

73 30547

Proposed Rules:

73 30558

49 CFR

552 30680
571 30680
585 30680
595 30680

50 CFR

32 30772
622 30547
648 30548
679 30549

Proposed Rules:

679 30559

Federal Register
Vol. 65, No. 93
Friday, May 12, 2000

Presidential Documents

Title 3—

The President

Executive Order 13155 of May 10, 2000

Access to HIV/AIDS Pharmaceuticals and Medical Technologies

By the authority vested in me as President by the Constitution and the laws of the United States of America, including sections 141 and chapter 1 of title III of the Trade Act of 1974, as amended (19 U.S.C. 2171, 2411–2420), section 307 of the Public Health Service Act (42 U.S.C. 2421), and section 104 of the Foreign Assistance Act of 1961, as amended (22 U.S.C. 2151b), and in accordance with executive branch policy on health-related intellectual property matters to promote access to essential medicines, it is hereby ordered as follows:

Section 1. *Policy.* (a) In administering sections 301–310 of the Trade Act of 1974, the United States shall not seek, through negotiation or otherwise, the revocation or revision of any intellectual property law or policy of a beneficiary sub-Saharan African country, as determined by the President, that regulates HIV/AIDS pharmaceuticals or medical technologies if the law or policy of the country:

(1) promotes access to HIV/AIDS pharmaceuticals or medical technologies for affected populations in that country; and

(2) provides adequate and effective intellectual property protection consistent with the Agreement on Trade-Related Aspects of Intellectual Property Rights (TRIPS Agreement) referred to in section 101(d)(15) of the Uruguay Round Agreements Act (19 U.S.C. 3511(d)(15)).

(b) The United States shall encourage all beneficiary sub-Saharan African countries to implement policies designed to address the underlying causes of the HIV/AIDS crisis by, among other things, making efforts to encourage practices that will prevent further transmission and infection and to stimulate development of the infrastructure necessary to deliver adequate health services, and by encouraging policies that provide an incentive for public and private research on, and development of, vaccines and other medical innovations that will combat the HIV/AIDS epidemic in Africa.

Sec. 2. *Rationale:* (a) This order finds that:

(1) since the onset of the worldwide HIV/AIDS epidemic, approximately 34 million people living in sub-Saharan Africa have been infected with the disease;

(2) of those infected, approximately 11.5 million have died;

(3) the deaths represent 83 percent of the total HIV/AIDS-related deaths worldwide; and

(4) access to effective therapeutics for HIV/AIDS is determined by issues of price, health system infrastructure for delivery, and sustainable financing.

(b) In light of these findings, this order recognizes that:

(1) it is in the interest of the United States to take all reasonable steps to prevent further spread of infectious disease, particularly HIV/AIDS;

(2) there is critical need for effective incentives to develop new pharmaceuticals, vaccines, and therapies to combat the HIV/AIDS crisis, including effective global intellectual property standards designed to foster pharmaceutical and medical innovation;

(3) the overriding priority for responding to the crisis of HIV/AIDS in sub-Saharan Africa should be to improve public education and to encourage

practices that will prevent further transmission and infection, and to stimulate development of the infrastructure necessary to deliver adequate health care services;

(4) the United States should work with individual countries in sub-Saharan Africa to assist them in development of effective public education campaigns aimed at the prevention of HIV/AIDS transmission and infection, and to improve their health care infrastructure to promote improved access to quality health care for their citizens in general, and particularly with respect to the HIV/AIDS epidemic;

(5) an effective United States response to the crisis in sub-Saharan Africa must focus in the short term on preventive programs designed to reduce the frequency of new infections and remove the stigma of the disease, and should place a priority on basic health services that can be used to treat opportunistic infections, sexually transmitted infections, and complications associated with HIV/AIDS so as to prolong the duration and improve the quality of life of those with the disease;

(6) an effective United States response to the crisis must also focus on the development of HIV/AIDS vaccines to prevent the spread of the disease;

(7) the innovative capacity of the United States in the commercial and public pharmaceutical research sectors is unmatched in the world, and the participation of both these sectors will be a critical element in any successful program to respond to the HIV/AIDS crisis in sub-Saharan Africa;

(8) the TRIPS Agreement recognizes the importance of promoting effective and adequate protection of intellectual property rights and the right of countries to adopt measures necessary to protect public health;

(9) individual countries should have the ability to take measures to address the HIV/AIDS epidemic, provided that such measures are consistent with their international obligations; and

(10) successful initiatives will require effective partnerships and cooperation among governments, international organizations, nongovernmental organizations, and the private sector, and greater consideration should be given to financial, legal, and other incentives that will promote improved prevention and treatment actions.

Sec. 3. *Scope.* (a) This order prohibits the United States Government from taking action pursuant to section 301(b) of the Trade Act of 1974 with respect to any law or policy in beneficiary sub-Saharan African countries that promotes access to HIV/AIDS pharmaceuticals or medical technologies and that provides adequate and effective intellectual property protection consistent with the TRIPS Agreement. However, this order does not prohibit United States Government officials from evaluating, determining, or expressing concern about whether such a law or policy promotes access to HIV/AIDS pharmaceuticals or medical technologies or provides adequate and effective intellectual property protection consistent with the TRIPS Agreement. In addition, this order does not prohibit United States Government officials from consulting with or otherwise discussing with sub-Saharan African governments whether such law or policy meets the conditions set forth in section 1(a) of this order. Moreover, this order does not prohibit the United States Government from invoking the dispute settlement procedures of the World Trade Organization to examine whether any such law or policy is consistent with the Uruguay Round Agreements, referred to in section 101(d) of the Uruguay Round Agreements Act.

(b) This order is intended only to improve the internal management of the executive branch and is not intended to, and does not create, any right or benefit, substantive or procedural, enforceable at law or equity by a party against the United States, its agencies or instrumentalities, its officers or employees, or any other person.

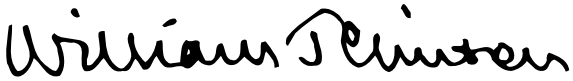

THE WHITE HOUSE,
May 10, 2000.

[FR Doc. 00–12177
Filed 5–11–00; 8:45 am]
Billing code 3195–01–P

Rules and Regulations

Federal Register
Vol. 65, No. 93
Friday, May 12, 2000

This section of the FEDERAL REGISTER contains regulatory documents having general applicability and legal effect, most of which are keyed to and codified in the Code of Federal Regulations, which is published under 50 titles pursuant to 44 U.S.C. 1510.

The Code of Federal Regulations is sold by the Superintendent of Documents. Prices of new books are listed in the first FEDERAL REGISTER issue of each week.

DEPARTMENT OF AGRICULTURE

Agricultural Marketing Service

7 CFR Part 989

[Docket No. FV00–989–2 FR]

Raisins Produced From Grapes Grown in California; Increase in Compensation Rate for Handlers' Services Performed Regarding Reserve Raisins

AGENCY: Agricultural Marketing Service, USDA.

ACTION: Final rule.

SUMMARY: This rule increases, by approximately 15 percent, the compensation rate for handlers' services performed in connection with reserve raisins covered under the Federal marketing order for California raisins (order). The order regulates the handling of raisins produced from grapes grown in California and is administered locally by the Raisin Administrative Committee (Committee). These changes are necessary to reflect current industry costs.

EFFECTIVE DATE: August 1, 2000.

FOR FURTHER INFORMATION CONTACT: Maureen T. Pello, Marketing Specialist, California Marketing Field Office, Marketing Order Administration Branch, Fruit and Vegetable Programs, AMS, USDA, 2202 Monterey Street, suite 102B, Fresno, California 93721; telephone: (559) 487–5901, Fax: (559) 487–5906; or George Kelhart, Technical Advisor, Marketing Order Administration Branch, Fruit and Vegetable Programs, AMS, USDA, room 2525–S, P.O. Box 96456, Washington, DC 20090–6456; telephone: (202) 720–2491, or Fax: (202) 720–5698.

Small businesses may request information on complying with this regulation by contacting Jay Guerber, Marketing Order Administration Branch, Fruit and Vegetable Programs, AMS, USDA, P.O. Box 96456, room 2525–S, Washington, DC 20090–6456; telephone (202) 720–2491, Fax: (202) 720–5698; or E-mail: Jay.Guerber@usda.gov.

SUPPLEMENTARY INFORMATION: This final rule is issued under Marketing Agreement and Order No. 989 (7 CFR part 989), both as amended, regulating the handling of raisins produced from grapes grown in California, hereinafter referred to as the ''order.'' The order is effective under the Agricultural Marketing Agreement Act of 1937, as amended (7 U.S.C. 601–674), hereinafter referred to as the ''Act.''

The Department of Agriculture (Department) is issuing this rule in conformance with Executive Order 12866.

This final rule has been reviewed under Executive Order 12988, Civil Justice Reform. This rule is not intended to have retroactive effect. This rule will not preempt any State or local laws, regulations, or policies, unless they present an irreconcilable conflict with this rule.

The Act provides that administrative proceedings must be exhausted before parties may file suit in court. Under section 608c(15)(A) of the Act, any handler subject to an order may file with the Secretary a petition stating that the order, any provision of the order, or any obligation imposed in connection with the order is not in accordance with law and request a modification of the order or to be exempted therefrom. A handler is afforded the opportunity for a hearing on the petition. After the hearing, the Secretary would rule on the petition. The Act provides that the district court of the United States in any district in which the handler is an inhabitant, or has his or her principal place of business, has jurisdiction in equity to review the Secretary's ruling on the petition, provided an action is filed not later than 20 days after the date of the entry of the ruling.

This final rule increases the compensation rate for handlers' services performed in connection with reserve raisins covered under the order. Under the order, handlers are compensated for receiving, storing, fumigating, and handling reserve tonnage raisins acquired during a crop year. This rule increases this rate from $40 to $46 per ton to reflect current industry costs. This action was unanimously recommended by the Committee on November 10, 1999. Additional payment for reserve raisins held beyond the crop year of acquisition will be increased from $2.00 to $2.30 per ton for the first 3 months, and from $1.03 to $1.18 per ton per month for the remaining 9 months. This action was unanimously recommended by the Committee on January 13, 2000.

The order provides authority for volume regulation designed to promote orderly marketing conditions, stabilize prices and supplies, and improve producer returns. When volume regulation is in effect, a certain percentage of the California raisin crop may be sold by handlers to any market (free tonnage) while the remaining percentage must be held by handlers in a reserve pool (or reserve) for the account of the Committee. Reserve raisins are disposed of through certain programs authorized under the order. For instance, reserve raisins may be sold by the Committee to handlers for free use; used in diversion programs; carried over as a hedge against a short crop the following year; or disposed of in other outlets not competitive with those for free tonnage raisins, such as government purchase, distilleries, or animal feed. Proceeds generated from sales of reserve raisins are also used to support handler sales to export markets, which are generally lower-priced than the domestic market. Net proceeds from sales of reserve raisins are distributed to the reserve pool's equity holders, primarily producers.

Section 989.66(f) of the order specifies that handlers be compensated for receiving, storing, fumigating, and handling that tonnage of reserve raisins determined by the reserve percentage of a crop year and held by them for the account of the Committee, in accordance with a schedule of payments established by the Committee and approved by the Secretary. Such compensation is paid by the Committee to handlers as soon as practicable after the end of the second quarter of the crop year (January) and quarterly thereafter. The crop year runs from August 1 through July 31. The order also requires that the Committee review this rate annually.

Section 989.401(a) of the order's rules and regulations specifies that handlers be compensated at a rate of $40 per ton

(natural condition weight at the time of acquisition) for receiving, storing, fumigating, and handling reserve raisins acquired during a particular crop year. The Committee conducted a survey among handlers to obtain data on the current costs of receiving, storing, fumigating, and handling raisins. The survey showed that such costs ranged from about $40 to $71.50 per ton. After analyzing the survey, the Committee recommended that the compensation rate provided for such services performed in connection with reserve raisins be increased from $40 to $46 per ton to reflect current industry costs. Paragraph (a)(1) of § 989.401 is modified accordingly.

In addition, the Committee recommended that payment to handlers for reserve raisins held beyond the end of a crop year be increased by the same percentage (15 percent). Additional payment for reserve raisins held beyond the crop year of acquisition is thus increased from $2.00 to $2.30 per ton for the first 3 months (August through October), and from $1.03 to $1.18 per ton per month for the remaining 9 months (November through July). Paragraph (b) of § 989.401 is modified accordingly.

This final rule also makes a minor correction to paragraph (b) of § 989.401. That paragraph, which, as indicated above, specifies the additional payment for reserve raisins held beyond the crop year of acquisition, states such additional payment for months reflecting a crop year from September 1 through August 31. However, the order was amended in 1976 to change the crop year from August 1 through July 31. Thus, the first 3 months of the crop year are August through October, rather than September through November, and the remaining 9 months of the crop year are the period November through July. Paragraph (b) of § 989.401 is modified accordingly.

Finally, this final rule makes a conforming change to paragraph (c) of § 989.401 regarding rental payment on boxes and bins containing raisins held beyond the crop year of acquisition. Persons who furnish boxes or bins used for storing reserve raisins are compensated for the use of such containers. Section 989.401(c) currently reflects a crop year from September 1 through August 31 and is modified to reflect the current August 1 through July 31 crop year.

Pursuant to requirements set forth in the Regulatory Flexibility Act (RFA), the Agricultural Marketing Service (AMS) has considered the economic impact of this action on small entities. Accordingly, AMS has prepared this final regulatory flexibility analysis.

The purpose of the RFA is to fit regulatory actions to the scale of business subject to such actions in order that small businesses will not be unduly or disproportionately burdened. Marketing orders issued pursuant to the Act, and rules issued thereunder, are unique in that they are brought about through group action of essentially small entities acting on their own behalf. Thus, both statutes have small entity orientation and compatibility.

There are approximately 20 handlers of California raisins who are subject to regulation under the order and approximately 4,500 raisin producers in the regulated area. Small agricultural service firms have been defined by the Small Business Administration (13 CFR 121.201) as those having annual receipts of less than $5,000,000, and small agricultural producers are defined as those having annual receipts of less than $500,000. Thirteen of the 20 handlers have annual sales estimated to be at least $5,000,000, and the remaining 7 handlers have sales less than $5,000,000, excluding receipts from any other sources. No more than 7 handlers and a majority of producers of California raisins may be classified as small entities.

Pursuant to § 989.66(f) of the order, this rule increases the compensation rate for handlers' services performed in connection with reserve raisins covered under the order. This rule revises paragraphs (a)(1) and (b) of § 989.401, respectively, to increase the handlers' compensation for receiving, storing, fumigating, and handling reserve raisins acquired during a particular crop year from $40 to $46 per ton, and increases such additional payment for reserve raisins held beyond the crop year of acquisition from $2.00 to $2.30 per ton for the first 3 months (August through October), and from $1.03 to $1.18 per ton per month for the remaining 9 months (November through July). These changes are necessary to reflect current industry costs. Conforming changes are also made to paragraphs (b) and (c) of § 989.401 to reflect the current August 1 through July 31 crop year.

Regarding the impact of this rule on affected entities, handlers and producers, the order provides that handlers store reserve raisins for the account of the Committee. Net proceeds from sales of such reserve raisins are distributed back to the reserve pool's equity holders, primarily producers. Handlers are compensated from reserve pool funds for their costs in receiving, storing, fumigating, and handling reserve raisins. Currently, handlers are compensated at a rate of $40 per ton for reserve raisins acquired during a particular crop year. For example, for the 1997–98 crop year, about 130,000 tons of raisins were held in reserve, and handlers were compensated a total of about $5.7 million from the 1997–98 reserve pool. A Committee survey showed that handler costs regarding reserve raisins has increased in recent years and that handlers have been absorbing these costs. Increasing the $40 per ton fee to $46 per ton for reserve raisins acquired during a particular crop year more appropriately reflects the costs incurred by handlers and thereby reduces net proceeds to equity holders. There should be no disproportionate impact of this action on small entities. Costs are allocated to equity holders based on their proportionate share of raisins in the reserve pool. In addition, this cost is incorporated into the price of reserve raisins that are sold to handlers for free use. Thus, the reserve pool is ultimately reimbursed for some of this cost.

Other alternatives to the rates adopted herein were considered by the raisin industry prior to the Committee's recommendations. The Committee's Administrative Issues Subcommittee met on November 9, 1999, and considered rates of $44 and $50 per ton for services performed in connection with reserve raisins acquired during a crop year. Ultimately, the Committee concluded that the $46 per ton rate for services performed during the year of acquisition, and comparable rates for the succeeding crop year, were appropriate.

This final rule increases the compensation rate for handlers' services regarding reserve tonnage raisins. Accordingly, this action imposes no additional reporting or recordkeeping requirements on either small or large raisin handlers. As with all Federal marketing order programs, reports and forms are periodically reviewed to reduce information requirements and duplication by industry and public sector agencies. Finally, the Department has not identified any relevant Federal rules that duplicate, overlap or conflict with this rule.

In addition, the Committee's Administrative Issues Subcommittee meeting on November 9, 1999, and the Committee meetings on November 10, 1999, and on January 13, 2000, where this action was deliberated were all public meetings widely publicized throughout the raisin industry. All interested persons were invited to attend the meetings and participate in the industry's deliberations.

A proposed rule concerning this action was published in the **Federal Register** on February 9, 2000 (65 FR 6341). Copies of the rule were mailed by the Committee staff to all Committee members and alternates, the Raisin Bargaining Association, handlers, and dehydrators. In addition, the rule was made available through the Internet by the Office of the Federal Register. That rule provided for a 60-day comment period which ended April 10, 2000. No comments were received.

A small business guide on complying with fruit, vegetable, and specialty crop marketing agreements and orders may be viewed at the following web site: http://www.ams.usda.gov/fv/moab/html. Any questions about the compliance guide should be sent to Jay Guerber at the previously mentioned address in the **FOR FURTHER INFORMATION CONTACT** section.

After consideration of all relevant matter presented, including the information and recommendation submitted by the Committee and other available information, it is hereby found that this rule, as hereinafter set forth, will tend to effectuate the declared policy of the Act.

List of Subjects in 7 CFR Part 989

Grapes, Marketing agreements, Raisins, Reporting and recordkeeping requirements.

For the reasons set forth in the preamble, 7 CFR part 989 is amended as follows:

PART 989—RAISINS PRODUCED FROM GRAPES GROWN IN CALIFORNIA

1. The authority citation for 7 CFR part 989 continues to read as follows:

Authority: 7 U.S.C. 601–674.

2. In § 989.401, paragraphs (a)(1), (b), and (c) are revised to read as follows:

§ 989.401 Payments for services performed with respect to reserve tonnage raisins.

(a) *Payment for crop year of acquisition.* (1) *Receiving, storing, fumigating, and handling.* Each handler shall be compensated at a rate of $46 per ton (natural condition weight at the time of acquisition) for receiving, storing, fumigating, and handling the reserve tonnage raisins, as determined by the final reserve tonnage percentage, acquired during a particular crop year and held by the handler for the account of the Committee during all or any part of the same crop year.

* * * * *

(b) *Additional payment for reserve tonnage raisins held beyond the crop year of acquisition.* Additional payment for reserve tonnage raisins held beyond the crop year of acquisition shall be made in accordance with this paragraph. Each handler holding such raisins for the account of the Committee on August 1 shall be compensated for storing, handling, and fumigating such raisins at the rate of $2.30 per ton per month, or any part thereof, between August 1 and October 31, and at the rate of $1.18 per ton per month, or any part thereof, between November 1 and July 31. Such services shall be completed so that the Committee is assured that the raisins are maintained in good condition.

(c) *Payment of rental on boxes and bins containing raisins held beyond the crop year of acquisition.* Payment of rental on boxes and bins containing reserve tonnage raisins held beyond the crop year of acquisition shall be made in accordance with this paragraph. Each handler, producer, dehydrator, and other person who furnishes boxes or bins in which such raisins are held for the account of the Committee on August 1 shall be compensated for the use of such boxes and bins. The rate of compensation shall be: For boxes, two and one-half cents per day, not to exceed a total payment of $1 per box per year, per average net weight of raisins in a sweatbox, with equivalent rates for raisins in boxes other than sweatboxes; and for bins 20 cents per day per bin, not to exceed a total of $10 per bin per year. For purposes of this paragraph, *box* means any container with a capacity of less than 1,000 pounds, and *bin* means any container with a capacity of 1,000 pounds or more. The average net weight of raisins in each type of box shall be the industry average as computed by the Committee for the box in which the raisins are so held. No further compensation shall be paid unless the raisins are so held in the boxes on the succeeding August 1.

Dated: May 8, 2000.

Robert C. Keeney,

Deputy Administrator, Fruit and Vegetable Programs.

[FR Doc. 00–11922 Filed 5–11–00; 8:45 am]

BILLING CODE 3410–02–P

DEPARTMENT OF THE TREASURY

Office of Thrift Supervision

12 CFR Parts 563, 563c, and 563g

[No. 2000–43]

RIN 1550–AB38

Transfer and Repurchase of Government Securities

AGENCY: Office of Thrift Supervision, Treasury.

ACTION: Direct Final Rule: confirmation of effective date.

SUMMARY: This document confirms the effective date of the direct final rule removing the Office of Thrift Supervision's regulation on the transfer and repurchase of government securities. We did not receive any written adverse comments in response to the direct final rule.

EFFECTIVE DATE: The direct final rule, published on March 28, 2000 (65 FR 16302–305), is effective May 30, 2000.

FOR FURTHER INFORMATION CONTACT: Ed O'Connell, (202) 906–5694, Project Manager, Supervision Policy: or Teresa Scott (202) 906–6478, Counsel (Banking and Finance), Regulations and Legislation Division, Chief Counsel's Office, Office of Thrift Supervision, 1700 G Street, NW., Washington DC 20552.

Authority: 12 U.S.C. 375b, 1462, 1462a, 1463, 1464, 1467a, 1468, 1817, 1820, 1828, 1831i, 3806; 15 U.S.C. 78c(b), 78l, 78m, 78n, 78p, 78w; 42 U.S.C. 4106.

Dated: May 8, 2000.≤

By the Office of Thrift Supervision.

Ellen Seidman,

Director.

[FR Doc. 00–11910 Filed 5–11–00; 8:45 am]

BILLING CODE 6720–01–P

DEPARTMENT OF TRANSPORTATION

Federal Aviation Administration

14 CFR Part 39

[Docket No. 2000–NE–04–AD; Amendment 39–11723; AD 2000–09–14]

RIN 2120–AA64

Airworthiness Directives; Rolls-Royce plc RB211–535 Series Turbofan Engines

AGENCY: Federal Aviation Administration, DOT.

ACTION: Final rule.

SUMMARY: This amendment adopts a new airworthiness directive (AD) that is

applicable to Rolls-Royce plc RB211–535 series turbofan engines. This AD will require removal from service of suspect radial drive steady bearings with certain serial number prefixes and replacement with serviceable parts. This amendment was prompted by reports of a number of radial drive steady bearing failures from distinct batches of parts. The actions specified by this AD are intended to prevent radial drive steady bearing failure, which could result in an in-flight engine shutdown and smoke and fumes in the cabin.

DATES: Effective date July 11, 2000.

ADDRESSES: The service information referenced in this AD may be obtained from Rolls-Royce plc, P.O. Box 31, Derby, DE24 8BJ, UK; telephone 011–44–1332–242424. This information may be examined at the Federal Aviation Administration (FAA), New England Region, Office of the Regional Counsel, 12 New England Executive Park, Burlington, MA, or at the Office of the Federal Register, 800 North Capitol Street, NW, suite 700, Washington, DC.

FOR FURTHER INFORMATION CONTACT: Jason Yang, Aerospace Engineer, Engine Certification Office, FAA, Engine and Propeller Directorate, 12 New England Executive Park, Burlington, MA 01803–5299; telephone 781–238–7747, fax 781–238–7199.

SUPPLEMENTARY INFORMATION: A proposal to amend part 39 of the Federal Aviation Regulations (14 CFR part 39) to include an airworthiness directive (AD) that is applicable to Rolls-Royce plc (R–R) RB211–535 series turbofan engines was published in the **Federal Register** on March 23, 2000 (65 FR 15584). That action proposed to require removal from service of defective radial drive steady bearings manufactured during certain dates and replacement with serviceable parts.

Comments

Interested persons have been afforded an opportunity to participate in the making of this amendment. Due consideration has been given to the comments received.

Requests to Change Compliance Thresholds

Four commenters request that the FAA change the threshold from xxx hours ''time-in-service'' to xxx hours ''since the effective date of this AD.'' The commenters state that, based on the fleet utilization rate, in certain cases engines installed with the suspect bearings would be out of compliance on the effective date of this AD.

The FAA agrees. The FAA will revise paragraphs (a)(1) and (a)(2) to read ''time-in-service after the effective date of this AD,'' instead of ''time-in-service-since-new.''

Three commenters request that the FAA increase the thresholds of paragraphs (a)(1) and (a)(2). One commenter requests an increase from 1,500 and 2,400 hours time-in-service (TIS) to 2,100 and 3,300 hours TIS, respectively. A second commenter requests an increase from 1,500 and 2,400 hours TIS to 2,000 and 3,200 hours TIS, respectively. These commenters state that, for the specific operators that will be affected by this AD, at least seven have higher utilization rates. Additionally, operator utilization historically increases during the summer months when the AD will be effective. Therefore, the commenters recommend the respective increases in compliance time in order to avoid a potential disruption to operators. A third commenter requests an increase from 1,500 and 2,400 hours TIS to 1,700 and 2,720 hours TIS, respectively. The commenter states that the proposed limits impose a significant burden as several affected engines will exceed their respective hour limits before reaching their respective calendar days.

The FAA partially agrees with these requests. The FAA will increase the threshold limits in paragraph (a)(1) from 1,500 hours to 1,700 hours TIS after the effective date of this AD. The compliance end date will remain September 30, 2000. The FAA will increase the threshold limits in paragraph (a)(2) from 2,400 hours to 2,720 hours TIS after the effective date of this AD. The compliance end date will remain December 31, 2000.

Request to Use Manufacturer's Calendar Time Limit

One commenter requests that the FAA use the manufacturer's calendar time limit only. The commenter states that the additional 1,500 hour limit placed on the suspect bearings, which is to be calculated from time-since-new, would make certain engines out of compliance from the effective date of the AD. The commenter states that by using only the manufacturer's calendar time limit, the operators would be allowed to source and properly schedule the replacement of these bearings.

The FAA does not agree. The calendar compliance date in the AD was determined by a risk analysis with a normal utilization rate of the engine. To prevent unsafe conditions for certain high usage engines, the AD proposes a calendar compliance date in conjunction with operating hours limits. Additionally, based on other comments received, the ''time-in-service-since-new'' threshold will be revised in the final rule to ''time-in-service after the effective date of this AD.'' This change should enable the operators to source and schedule replacement of these bearings.

Revise Economic Analysis

One commenter states that the number of engines installed on aircraft of U.S. registry should be revised. Since only engines that were built new or required a new radial drive steady bearing during the period of July 26, 1998, and September 30, 1999, are affected, the number installed on aircraft of U.S. registry is 102 engines.

The FAA agrees. Based on the revised estimate of 102 affected engines installed on aircraft of U.S. registry, the total cost impact of the AD on U.S. operators is reduced from $160,000 to $40,800. The economic analysis section of the final rule will be revised accordingly.

Clarification of Paragraph (b)(2)

One commenter requests clarification of paragraph (b)(2). The commenter believes that the FAA's intent is that two engines with suspect bearings must not be installed on the same aircraft, until all the suspect bearings are removed per paragraphs (a)(1) and (a)(2). The commenter states that this paragraph, as written, seems redundant and looks like a similar requirement to that of deleted service bulletin RB.211–72–C810.

The FAA does not agree that paragraph (b)(2) is redundant. The intent of paragraph (b)(2) is to prevent the installation of two engines with suspect bearings on the same airplane. This additional requirement ensures that engines with the suspect bearings that have not yet reached the compliance thresholds of paragraphs (a)(1) and (a)(2) will not be installed on the same airplane, thereby reducing the potential for an unsafe condition.

Explanation of Change to Compliance Section

The FAA has revised the compliance section to insert a note on service information. This note references Rolls-Royce Service Bulletin No. RB.211–72–C930, dated December 22, 1999, which provides additional information on identifying and replacing the suspect bearings. This note has been numbered Note 2; the proposed Note 2 has been renumbered Note 3.

Conclusion

After careful review of the available data, including the comments noted above, the FAA has determined that air

safety and the public interest require the adoption of the rule with the changes described previously. The FAA has determined that these changes will neither increase the economic burden on any operator nor increase the scope of the AD.

Economic Analysis

There are approximately 1,000 engines of the affected design in the worldwide fleet. The FAA estimates that 102 engines installed on aircraft of US registry will be affected by this AD. It will take approximately 4 work hours per engine to accomplish the required actions. The average labor rate is $60 per work hour. Required parts will cost approximately $160 per engine. Based on these figures, the total cost impact of the AD on US operators is estimated to be $40,800.

Regulatory Impact

This rule does not have federalism implications, as defined in Executive Order 13132, because it does not have a substantial direct effect on the States, on the relationship between the national government and the States, or on the distribution of power and responsibilities among the various levels of government. Accordingly, the FAA has not consulted with state authorities prior to publication of this rule.

For the reasons discussed above, I certify that this action (1) is not a ''significant regulatory action'' under Executive Order 12866; (2) is not a ''significant rule'' under DOT Regulatory Policies and Procedures (44 FR 11034, February 26, 1979); and (3) will not have a significant economic impact, positive or negative, on a substantial number of small entities under the criteria of the Regulatory Flexibility Act. A final evaluation has been prepared for this action and is contained in the Rules Docket. A copy of it may be obtained from the Rules Docket at the location provided under the caption **ADDRESSES**.

List of Subjects in 14 CFR Part 39

Air transportation, Aircraft, Aviation safety, Safety.

Adoption of the Amendment

Accordingly, pursuant to the authority delegated to me by the Administrator, the Federal Aviation Administration amends part 39 of the Federal Aviation Regulations (14 CFR part 39) as follows:

PART 39—AIRWORTHINESS DIRECTIVES

1. The authority citation for part 39 continues to read as follows:

Authority: 49 U.S.C. 106(g), 40113, 44701.

§ 39.13 [Amended]

2. Section 39.13 is amended by adding the following new airworthiness directive:

2000–09–14 Rolls-Royce plc: Amendment 39–11723. Docket No. 2000–NE–04–AD.

Applicability: Rolls-Royce plc RB211–535 series turbofan engines, with radial drive steady bearings with outer race serial number (S/N) prefixes: DLJO, DLJP, DLOQ, DLSK, and DMBA, installed. Affected engines are those that have had a new bearing fitted at overhaul, were new production engines, or had a bearing changed in service between July 26, 1998, and September 30, 1999. These engines are installed on but not limited to Boeing 757 series aircraft and Tupolev Tu204 series aircraft.

Note 1: This airworthiness directive (AD) applies to each engine identified in the preceding applicability provision, regardless of whether it has been modified, altered, or repaired in the area subject to the requirements of this AD. For engines that have been modified, altered, or repaired so that the performance of the requirements of this AD is affected, the owner/operator must request approval for an alternative method of compliance in accordance with paragraph (c) of this AD. The request should include an assessment of the effect of the modification, alteration, or repair on the unsafe condition addressed by this AD; if the unsafe condition has not been eliminated, the request should include specific proposed actions to address it.

Compliance: Required as indicated, unless accomplished previously.

To prevent radial drive steady bearing failure, which could result in an in-flight engine shutdown and smoke and fumes in the cabin, accomplish the following:

Remove Suspect Bearings

(a) Remove from service radial drive steady bearings identified in the applicability paragraph of this AD and replace with serviceable parts as follows:

(1) For engines that had the suspect radial drive steady bearings installed during a shop visit or on-wing, remove from service before accumulating 1,700 hours time-in-service (TIS) after the effective date of this AD, but no later than September 30, 2000.

(2) For engines that had the suspect radial drive steady bearings installed in factory production, remove from service before accumulating 2,720 hours TIS after the effective date of this AD, but no later than December 31, 2000.

Note 2: Rolls-Royce plc Mandatory Service Bulletin No. RB.211–72–C930, dated December 22, 1999, provides additional information on identifying and replacing the suspect bearings.

Do Not Install Suspect Bearings

(b) As of the effective date of this AD, accomplish the following:

(1) Do not install radial drive steady bearings from the five affected batches listed in the applicability paragraph of this AD at overhaul, in service, or at new production.

(2) If performing an engine change, do not allow two engines that have bearings from any of the five affected batches listed in the applicability paragraph of this AD to be installed on the same airplane.

Serviceable Parts

(3) For the purpose of this AD, serviceable bearings are those which are not listed in the applicability paragraph of this AD. Current outer race S/N prefix DPSF or alphabetically subsequent prefix is considered serviceable.

Alternative Methods of Compliance

(c) An alternative method of compliance or adjustment of the compliance time that provides an acceptable level of safety may be used if approved by the Manager, Engine Certification Office (ECO). Operators shall submit their request through an appropriate FAA Principal Maintenance Inspector, who may add comments and then send it to the Manager, ECO.

Note 3: Information concerning the existence of approved alternative methods of compliance with this airworthiness directive, if any, may be obtained from the ECO.

Ferry Flights

(d) Special flight permits may be issued in accordance with §§ 21.197 and 21.199 of the Federal Aviation Regulations (14 CFR 21.197 and 21.199) to operate the aircraft to a location where the requirements of this AD can be accomplished.

Effective Date

(e) This amendment becomes effective on July 11, 2000.

Issued in Burlington, Massachusetts, on May 5, 2000.

David A. Downey,

Assistant Manager, Engine and Propeller Directorate, Aircraft Certification Service.

[FR Doc. 00–11862 Filed 5–11–00; 8:45 am]

BILLING CODE 4910–13–P

DEPARTMENT OF TRANSPORTATION

Federal Aviation Administration

14 CFR Part 39

[Docket No. 99–NM–253–AD; Amendment 39–11720; AD 2000–09–11]

RIN 2120–AA64

Airworthiness Directives; Fokker Model F.28 Mark 0070 Series Airplanes

AGENCY: Federal Aviation Administration, DOT.

ACTION: Final rule; request for comments.

SUMMARY: This amendment adopts a new airworthiness directive (AD), applicable to certain Fokker Model F.28

Mark 0070 series airplanes. This action requires a one-time inspection to detect loose bolts attaching the gustlock counter-bracket to the pulley on the elevator tension regulator assembly, and corrective action, if necessary. This amendment is prompted by issuance of mandatory continuing airworthiness information by a foreign civil airworthiness authority. The actions specified in this AD are intended to prevent restricted elevator movement and consequent reduced controllability of the airplane.

DATES: Effective May 30, 2000.

The incorporation by reference of certain publications listed in the regulations is approved by the Director of the Federal Register as of May 30, 2000.

Comments for inclusion in the Rules Docket must be received on or before June 12, 2000.

ADDRESSES: Submit comments in triplicate to the Federal Aviation Administration (FAA), Transport Airplane Directorate, ANM–114, Attention: Rules Docket No. 99–NM–253–AD, 1601 Lind Avenue, SW., Renton, Washington 98055–4056.

The service information referenced in this AD may be obtained from Fokker Services B.V., P.O. Box 231, 2150 AE Nieuw-Vennep, the Netherlands. This information may be examined at the FAA, Transport Airplane Directorate, 1601 Lind Avenue, SW., Renton, Washington; or at the Office of the Federal Register, 800 North Capitol Street, NW., suite 700, Washington, DC.

FOR FURTHER INFORMATION CONTACT: Norman B. Martenson, Manager, International Branch, ANM–116, FAA, Transport Airplane Directorate, 1601 Lind Avenue, SW., Renton, Washington 98055–4056; telephone (425) 227–2110; fax (425) 227–1149.

SUPPLEMENTARY INFORMATION: The Rijksluchtvaartdienst (RLD), which is the airworthiness authority for the Netherlands, notified the FAA that an unsafe condition may exist on certain Fokker Model F.28 Mark 0070 series airplanes. The RLD advises that, during a routine landing of a Model F.28 Mark 0070 series airplane, the flight crew could not move the control column to its fully aft position. A subsequent inspection revealed that one of the three bolts attaching the gustlock counter-bracket to a pulley on the elevator tension regulator assembly became loose. The bolt had moved outwards slightly, obstructing the driving lever of the elevator and thus restricting the elevator deflection to 21 degrees (airplane nose up) instead of the normal 25 degrees. This condition, if not corrected, could result in reduced controllability of the airplane.

Explanation of Relevant Service Information

Fokker has issued Service Bulletin SBF100–27–076, dated July 1, 1999, which describes procedures for a one-time general visual inspection to detect discrepancies, and corrective action, if necessary. Discrepancies include improper installation, loose bolts, sealant damage or an insufficient amount of sealant, and incorrect torque values of the bolts or nuts. Corrective actions include removing the sealant (if present) from the bolt head and nut and checking the torque value of the bolt and nut; replacing any discrepant bolt, washer, or nut with a new component; ensuring specified torque values; and applying sealant to the bolt head and nut to prevent corrosion.

Accomplishment of the inspections and corrective actions specified in the service bulletin is intended to adequately address the identified unsafe condition. The RLD classified this service bulletin as mandatory and issued Dutch airworthiness directive 1999–094, dated July 30, 1999, in order to assure the continued airworthiness of these airplanes in the Netherlands.

FAA's Conclusions

This airplane model is manufactured in the Netherlands and is type certificated for operation in the United States under the provisions of section 21.29 of the Federal Aviation Regulations (14 CFR 21.29) and the applicable bilateral airworthiness agreement. Pursuant to this bilateral airworthiness agreement, the RLD has kept the FAA informed of the situation described above. The FAA has examined the findings of the RLD, reviewed all available information, and determined that AD action is necessary for products of this type design that are certificated for operation in the United States.

Explanation of Requirements of the Rule

Since an unsafe condition has been identified that is likely to exist or develop on other airplanes of the same type design registered in the United States, this AD is being issued to prevent restricted elevator movement and consequent reduced controllability of the airplane. This AD requires accomplishment of the actions specified in the service bulletin described previously, except as described below.

Differences Between the Proposed AD and the Service Bulletin

Operators should note that, although the effectivity listing in the Planning Information of the service bulletin specifies ''Model F.28 Mark 0070/0100'' series airplanes, the applicability statement of this proposed AD specifies only ''Model F.28 Mark 0070 series airplanes.'' The FAA has determined that none of the affected Model F.28 Mark 0100 series airplanes are currently eligible for import into the United States; therefore, no action is required for those airplanes by this AD. In addition, the FAA points out that only two of the airplanes listed in the service bulletin are included in this proposed AD because only serial numbers 11565 and 11569 are eligible for import into the United States; the other serial numbers listed in the service bulletin are not eligible for import into the United States.

Cost Impact

None of the Model F.28 Mark 0070 series airplanes affected by this action are on the U.S. Register. All airplanes included in the applicability of this rule currently are operated by non-U.S. operators under foreign registry; therefore, they are not directly affected by this AD action. However, the FAA considers that this rule is necessary to ensure that the unsafe condition is addressed in the event that any of these subject airplanes are imported and placed on the U.S. Register in the future.

Should an affected airplane be imported and placed on the U.S. Register in the future, it would require approximately 1 work hour to accomplish the required actions, at an average labor rate of $60 per work hour. Based on these figures, the cost impact of this AD on U.S. operators is estimated to be $60 per airplane.

Determination of Rule's Effective Date

Since this AD action does not affect any airplane that is currently on the U.S. register, it has no adverse economic impact and imposes no additional burden on any person. Therefore, prior notice and public procedures hereon are unnecessary and the amendment may be made effective in less than 30 days after publication in the **Federal Register**.

Comments Invited

Although this action is in the form of a final rule and was not preceded by notice and opportunity for public comment, comments are invited on this rule. Interested persons are invited to comment on this rule by submitting such written data, views, or arguments as they may desire. Communications

shall identify the Rules Docket number and be submitted in triplicate to the address specified under the caption **ADDRESSES.** All communications received on or before the closing date for comments will be considered, and this rule may be amended in light of the comments received. Factual information that supports the commenter's ideas and suggestions is extremely helpful in evaluating the effectiveness of the AD action and determining whether additional rulemaking action would be needed.

Comments are specifically invited on the overall regulatory, economic, environmental, and energy aspects of the rule that might suggest a need to modify the rule. All comments submitted will be available, both before and after the closing date for comments, in the Rules Docket for examination by interested persons. A report that summarizes each FAA-public contact concerned with the substance of this AD will be filed in the Rules Docket.

Commenters wishing the FAA to acknowledge receipt of their comments submitted in response to this rule must submit a self-addressed, stamped postcard on which the following statement is made: ''Comments to Docket Number 99–NM–253–AD.'' The postcard will be date stamped and returned to the commenter.

Regulatory Impact

The regulations adopted herein will not have a substantial direct effect on the States, on the relationship between the national Government and the States, or on the distribution of power and responsibilities among the various levels of government. Therefore, it is determined that this final rule does not have federalism implications under Executive Order 13132.

For the reasons discussed above, I certify that this action (1) Is not a ''significant regulatory action'' under Executive Order 12866; (2) is not a ''significant rule'' under DOT Regulatory Policies and Procedures (44 FR 11034, February 26, 1979); and (3) will not have a significant economic impact, positive or negative, on a substantial number of small entities under the criteria of the Regulatory Flexibility Act. A final evaluation has been prepared for this action and it is contained in the Rules Docket. A copy of it may be obtained from the Rules Docket at the location provided under the caption **ADDRESSES.**

List of Subjects in 14 CFR Part 39

Air transportation, Aircraft, Aviation safety, Incorporation by reference, Safety.

Adoption of the Amendment

Accordingly, pursuant to the authority delegated to me by the Administrator, the Federal Aviation Administration amends part 39 of the Federal Aviation Regulations (14 CFR part 39) as follows:

PART 39—AIRWORTHINESS DIRECTIVES

1. The authority citation for part 39 continues to read as follows:

Authority: 49 U.S.C. 106(g), 40113, 44701.

§ 39.13 [Amended]

2. Section 39.13 is amended by adding the following new airworthiness directive:

2000–09–11 Fokker Services B.V.: Amendment 39–11720. Docket 99–NM–253–AD.

Applicability: Model F.28 Mark 0070 airplanes, serial numbers 11565 and 11569; certificated in any category.

Note 1: This AD applies to each airplane identified in the preceding applicability provision, regardless of whether it has been modified, altered, or repaired in the area subject to the requirements of this AD. For airplanes that have been modified, altered, or repaired so that the performance of the requirements of this AD is affected, the owner/operator must request approval for an alternative method of compliance in accordance with paragraph (b) of this AD. The request should include an assessment of the effect of the modification, alteration, or repair on the unsafe condition addressed by this AD; and, if the unsafe condition has not been eliminated, the request should include specific proposed actions to address it.

Compliance: Required as indicated, unless accomplished previously.

To prevent restricted elevator movement and consequent reduced controllability of the airplane, accomplish the following:

Inspection

(a) Within 2 months after the effective date of this AD, perform a one-time general visual inspection of the elevator gustlock counter-bracket of the elevator tension regulator assembly to detect any discrepancy (including improper installation, loose bolts, sealant damage or an insufficient amount of sealant, and incorrect torque values of the bolts or nuts), in accordance with the Accomplishment Instructions of Fokker Service Bulletin SBF100–27–076, dated July 1, 1999.

(1) If no discrepancy is detected, no further action is required by this AD.

(2) If any discrepancy is detected, prior to further flight, accomplish the applicable corrective actions [removing the sealant (if present) from the bolt head and nut and checking the torque value of the bolt and nut; replacing any discrepant bolt, washer, or nut with a new component; ensuring specified torque values; and applying sealant to the bolt head and nut to prevent corrosion], in accordance with the service bulletin.

Note 2: For the purposes of this AD, a general visual inspection is defined as: ''A visual examination of an interior or exterior area, installation, or assembly to detect obvious damage, failure, or irregularity. This level of inspection is made under normally available lighting conditions such as daylight, hangar lighting, flashlight, or drop-light, and may require removal or opening of access panels or doors. Stands, ladders, or platforms may be required to gain proximity to the area being checked.''

Alternative Methods of Compliance

(b) An alternative method of compliance or adjustment of the compliance time that provides an acceptable level of safety may be used if approved by the Manager, International Branch, ANM–116, FAA, Transport Airplane Directorate. Operators shall submit their requests through an appropriate FAA Principal Maintenance Inspector, who may add comments and then send it to the Manager, International Branch, ANM–116.

Note 3: Information concerning the existence of approved alternative methods of compliance with this AD, if any, may be obtained from the International Branch, ANM–116.

Special Flight Permits

(c) Special flight permits may be issued in accordance with sections 21.197 and 21.199 of the Federal Aviation Regulations (14 CFR 21.197 and 21.199) to operate the airplane to a location where the requirements of this AD can be accomplished.

Incorporation by Reference

(d) The actions shall be done in accordance with Fokker Service Bulletin SBF100–27–076, dated July 1, 1999. This incorporation by reference was approved by the Director of the Federal Register in accordance with 5 U.S.C. 552(a) and 1 CFR part 51. Copies may be obtained from Fokker Services B.V., P.O. Box 231, 2150 AE Nieuw-Vennep, the Netherlands. Copies may be inspected at the FAA, Transport Airplane Directorate, 1601 Lind Avenue, SW., Renton, Washington; or at the Office of the Federal Register, 800 North Capitol Street, NW., suite 700, Washington, DC.

Note 4: The subject of this AD is addressed in Dutch airworthiness directive 1999–094, dated July 30, 1999.

(e) This amendment becomes effective on May 30, 2000.

Issued in Renton, Washington, on May 3, 2000.

Vi L. Lipski,

Acting Manager, Transport Airplane Directorate, Aircraft Certification Service.

[FR Doc. 00–11546 Filed 5–11–00; 8:45 am]

BILLING CODE 4910–13–U

DEPARTMENT OF TRANSPORTATION

Federal Aviation Administration

14 CFR Part 39

[Docket No. 99–NM–242–AD; Amendment 39–11717; AD 2000–09–08]

RIN 2120–AA64

Airworthiness Directives; Boeing Model 747–100, –200, 747SP, and 747SR Series Airplanes Equipped With Pratt & Whitney JT9D–7, –7A, –7F, and –7J Series Engines

AGENCY: Federal Aviation Administration, DOT.

ACTION: Final rule.

SUMMARY: This amendment adopts a new airworthiness directive (AD), applicable to certain Boeing Model 747–100, –200, 747SP, and 747SR series airplanes, that requires one-time detailed visual and eddy current inspections to detect cracking of the nose cowl mounting flange; rework of the nose cowl mounting flange; eddy current inspection to detect cracking of the reworked nose cowl mounting flange; and corrective action, if necessary. This amendment is prompted by reports of the nose cowl separating from the engine and departing the airplane following severe engine vibration. The actions specified by this AD are intended to prevent separation of the nose cowl from the engine, which could cause collateral damage to the airplane, and, possibly, reduced controllability of the airplane.

DATES: Effective June 16, 2000.

The incorporation by reference of certain publications listed in the regulations is approved by the Director of the **Federal Register** as of June 16, 2000.

ADDRESSES: The service information referenced in this AD may be obtained from Boeing Commercial Airplane Group, P.O. Box 3707, Seattle, Washington 98124–2207.

This information may be examined at the Federal Aviation Administration (FAA), Transport Airplane Directorate, Rules Docket, 1601 Lind Avenue, SW., Renton, Washington; or at the Office of the **Federal Register**, 800 North Capitol Street, NW., suite 700, Washington, DC.

FOR FURTHER INFORMATION CONTACT: Dionne Krebs, Aerospace Engineer, Propulsion Branch, ANM–140S, FAA, Transport Airplane Directorate, Seattle Aircraft Certification Office, 1601 Lind Avenue, SW., Renton, Washington 98055–4056; telephone (425) 227–2250; fax (425) 227–1181.

SUPPLEMENTARY INFORMATION: A proposal to amend part 39 of the Federal Aviation Regulations (14 CFR part 39) to include an airworthiness directive (AD) that is applicable to certain Boeing Model 747–100, –200, 747SP, and 747SR series airplanes was published in the **Federal Register** on October 6, 1999 (64 FR 54240). That action proposed to require one-time detailed visual and eddy current inspections to detect cracking of the nose cowl mounting flange; rework of the nose cowl mounting flange; eddy current inspection to detect cracking of the reworked nose cowl mounting flange; and corrective action, if necessary.

Comments

Interested persons have been afforded an opportunity to participate in the making of this amendment. Due consideration has been given to the comments received.

Support for the Proposed Rule

One commenter supports the proposed rule.

Request to Remove Paragraph (c)

Two commenters (who otherwise support the proposal) request that paragraph (c) of the proposed rule be eliminated. That paragraph reads, ''As of the effective date of this AD, no person shall install a nose cowl on any airplane, unless it has been inspected and modified in accordance with paragraph (a) of this AD.'' One commenter states that this paragraph would effectively require modification of nose cowls well before the 24-month compliance time, which could result in an airplane being out of service for an extended period if an unexpected engine change is necessary. The other commenter states that, if paragraph (c) is included in the final rule, the commenter would have to purchase at least one additional spare nose cowl, because approximately 50 percent of its engine changes occur at locations that do not have a spare nose cowl. The commenter states that if an engine change occurs at a location that does not have a spare modified nose cowl, the time necessary to return the airplane to service will increase by at least six hours, which would result in lengthy flight delays or cancellations that would be costly and would cause disruptions for the traveling public. The commenter states that purchasing a new spare nose cowl would be expensive and would require a lead time of 300 days.

The FAA concurs with the commenters' request to eliminate paragraph (c) of the proposed rule. The FAA's intent is to allow operators to accomplish the necessary inspections and rework during a regularly scheduled maintenance interval. Therefore, paragraph (c) of the proposed rule has not been included in this final rule. The FAA finds that eliminating paragraph (c) of the proposed rule will not adversely impact the safety of the affected airplane fleet and will allow more flexibility for operators in complying with the requirements within the specified compliance time.

Request to Extend Compliance Time

One commenter requests that paragraph (a) of the proposed rule be revised to extend the compliance time from 24 months, as proposed, to 36 months. The commenter states that the ''very aggressive incorporation rate requirements'' are not justified, given that there have been few incidents of nose cowl separations. The commenter states that extending the compliance time would allow the required actions to be accomplished during scheduled maintenance opportunities.

The FAA does not concur with the commenter's request. In developing an appropriate compliance time for this action, the FAA considered the safety implications, parts availability, and normal maintenance schedules for timely accomplishment of the requirements of this AD. In consideration of these items, as well as the reports of six in-service nose cowl separations, the FAA has determined that 24 months represents an appropriate interval of time allowable wherein the modifications can be accomplished during scheduled maintenance intervals for the majority of affected operators and an acceptable level of safety can be maintained. No change to the final rule is necessary in this regard.

Challenge to Justification for Proposed Requirements

One commenter, an operator, states that, while it has no technical objection to the rework of the nose cowl mounting flange described in the proposed rule, it cannot recall any incident on its fleet of affected airplanes, in which ingestion of a foreign object into the engine resulted in separation of the nose cowl. The commenter questions the conditions that existed and the events that occurred during the incidents of nose cowl separation referenced in the proposed rule. The commenter challenges the justification for the proposed requirements if the FAA determines that unique conditions or circumstances led to the incidents in question. The commenter makes no specific request for a change to the proposed rule.

The FAA infers that the commenter is requesting that the FAA consider withdrawing the proposed rule. The FAA does not concur. The information that the FAA has received regarding incidents of nose cowl separation does not suggest that there were any conditions common to all incidents besides the configuration of the nose cowl mounting flange. The information has led the FAA to determine that the 37-bolt mounting flange configuration is not adequate to retain the nose cowl on Pratt & Whitney JT9D series engines, and that the modification of the nose cowl mounting flange described in the proposed rule is necessary. No change to the final rule is necessary in this regard.

Request to Remove References to ''Reduced Controllability of the Airplane''

One commenter states that, ''To date, no evidence of reduced airplane controllability during or after separation [of the nose cowl] has been reported.'' The commenter makes no specific request and provides no further information related to its comment.

The FAA infers that the commenter is requesting that references to ''reduced controllability of the airplane'' be removed from the proposed rule. The FAA concurs with the commenter's statement that there have been no reported instances of reduced airplane controllability during or after the separation of a nose cowl. However, the potential exists for reduced controllability during or after the separation of a nose cowl, if the separated nose cowl comes into contact with the airplane. This possibility is the basis for determining that the separation of a nose cowl is an unsafe condition. Therefore, the FAA finds that no change to the final rule is necessary in this regard.

Request to Revise ''Explanation of Relevant Service Information'' Section

One commenter, the manufacturer, states that the service bulletin referenced in the proposed rule was issued not as an inspection bulletin to detect cracking in the mounting flange, but, instead, to provide instructions for strengthening the attachment capability of the nose cowl by increasing the number of attachment fasteners. The commenter also states that it has not received reports of cracking in the nose cowl flange, nor has cracking been identified as the cause of the nose cowl separation. The commenter further states that the eddy current and detailed visual inspections described in the service bulletin are a common maintenance/rework practice after machining operations such as drilling holes, to ensure that no damage was done during the operation.

The commenter makes no specific request for a change to the proposed rule. However, the FAA infers that the commenter is requesting that the ''Explanation of Relevant Service Information'' section of the proposed rule be revised to eliminate references to cracking and to clarify the purpose of the eddy current and detailed visual inspections. The FAA concurs with the commenter's description of the intent of the service bulletin; however, because the referenced section is not restated in the final rule, no change to this section is necessary. In response to this comment, the FAA has also reviewed the explanation of the unsafe condition in the ''Discussion'' section of the proposed rule, and finds that the section accurately describes the intent and background of the proposed rule. No change to the final rule is necessary in this regard.

Request to Revise Cost Impact Estimate

One commenter requests an increase in the cost estimate of the proposed rule. The commenter points out that the proposed rule estimates that it will take approximately 19 work hours per airplane to accomplish the proposed actions, while the service bulletin estimates approximately 34 work hours per airplane for the actions described in the service bulletin. Also, the commenter points out that the cost figures in the proposed rule do not account for the cost of accomplishing the proposed actions on spare nose cowls, which the commenter estimates will take approximately 5.5 work hours per nose cowl.

The FAA infers that the commenter is requesting that the cost impact information in the final rule be revised to reflect the service bulletin estimates and to incorporate the estimated cost for inspecting and reworking spares. The FAA does not concur with the commenter's request. The cost impact information in AD rulemaking actions describes only the ''direct'' costs of the specific actions required by this AD. The number of work hours necessary to accomplish the required actions (specified as 19 in the cost impact information in the proposed rule and restated below) was provided to the FAA by the manufacturer based on the best data available to date. This number represents the time necessary to perform only the actions actually required by this AD. The FAA recognizes that, in accomplishing the requirements of any AD, operators may incur ''incidental'' costs in addition to the ''direct'' costs. The cost analysis in AD rulemaking actions, however, typically does not include incidental costs, such as the time required to gain access and close up, planning time, or time necessitated by other administrative actions. Because incidental costs may vary significantly from operator to operator, they are almost impossible to calculate. In addition, the estimated cost to modify ''spare'' parts is not typically included in AD rulemaking actions. No change to the final rule is necessary in this regard.

Conclusion

After careful review of the available data, including the comments noted above, the FAA has determined that air safety and the public interest require the adoption of the rule with the change previously described. The FAA has determined that this change will neither increase the economic burden on any operator nor increase the scope of the AD.

Cost Impact

There are approximately 257 airplanes of the affected design in the worldwide fleet. The FAA estimates that 106 airplanes of U.S. registry will be affected by this AD, that it will take approximately 19 work hours per airplane to accomplish the required actions, and that the average labor rate is $60 per work hour. Required parts will cost approximately $500 per airplane. Based on these figures, the cost impact of the AD on U.S. operators is estimated to be $173,840, or $1,640 per airplane.

The cost impact figure discussed above is based on assumptions that no operator has yet accomplished any of the requirements of this AD action, and that no operator would accomplish those actions in the future if this AD were not adopted.

Regulatory Impact

The regulations adopted herein will not have a substantial direct effect on the States, on the relationship between the national Government and the States, or on the distribution of power and responsibilities among the various levels of government.

Therefore, it is determined that this final rule does not have federalism implications under Executive Order 13132.

For the reasons discussed above, I certify that this action (1) Is not a ''significant regulatory action'' under Executive Order 12866; (2) is not a ''significant rule'' under DOT Regulatory Policies and Procedures (44 FR 11034, February 26, 1979); and (3)

will not have a significant economic impact, positive or negative, on a substantial number of small entities under the criteria of the Regulatory Flexibility Act. A final evaluation has been prepared for this action and it is contained in the Rules Docket. A copy of it may be obtained from the Rules Docket at the location provided under the caption **ADDRESSES**.

List of Subjects in 14 CFR Part 39

Air transportation, Aircraft, Aviation safety, Incorporation by reference, Safety.

Adoption of the Amendment

Accordingly, pursuant to the authority delegated to me by the Administrator, the Federal Aviation Administration amends part 39 of the Federal Aviation Regulations (14 CFR part 39) as follows:

PART 39—AIRWORTHINESS DIRECTIVES

1. The authority citation for part 39 continues to read as follows:

Authority: 49 U.S.C. 106(g), 40113, 44701.

§ 39.13 [Amended]

2. Section 39.13 is amended by adding the following new airworthiness directive:

2000–09–08 Boeing: Amendment 39–11717. Docket 99–NM–242–AD.

Applicability: Model 747–100, –200, 747SP, and 747SR series airplanes; certificated in any category; equipped with Pratt & Whitney JT9D–7, –7A, –7F, and –7J series engines.

Note 1: This AD applies to each airplane identified in the preceding applicability provision, regardless of whether it has been modified, altered, or repaired in the area subject to the requirements of this AD. For airplanes that have been modified, altered, or repaired so that the performance of the requirements of this AD is affected, the owner/operator must request approval for an alternative method of compliance in accordance with paragraph (c) of this AD. The request should include an assessment of the effect of the modification, alteration, or repair on the unsafe condition addressed by this AD; and, if the unsafe condition has not been eliminated, the request should include specific proposed actions to address it.

Compliance: Required as indicated, unless accomplished previously.

To prevent separation of the nose cowl from the engine, which could cause collateral damage to the airplane, and, possibly, reduced controllability of the airplane, accomplish the following:

One-Time Inspections and Rework

(a) Within 24 months after the effective date of this AD, perform one-time detailed visual and eddy current inspections to detect cracking of the existing nose cowl mounting flange, rework the nose cowl mounting flange to increase the number of attachment fastener holes from 37 to 67, and perform a one-time eddy current inspection to detect cracking of the new fastener holes in the reworked nose cowl mounting flange, in accordance with the Accomplishment Instructions of Boeing Service Bulletin 747–71–2290, dated March 18, 1999.

Note 2: For the purposes of this AD, a detailed visual inspection is defined as ''An intensive visual examination of a specific structural area, system, installation, or assembly to detect damage, failure, or irregularity. Available lighting is normally supplemented with a direct source of good lighting at intensity deemed appropriate by the inspector. Inspection aides such as mirror, magnifying lenses, etc., may be used. Surface cleaning and elaborate access procedures may be required.''

Corrective Action

(b) If any crack is found during any inspection required by paragraph (a) of this AD: Prior to further flight, repair in accordance with a method approved by the Manager, Seattle Aircraft Certification Office (ACO), FAA, Transport Airplane Directorate.

Alternative Methods of Compliance

(c) An alternative method of compliance or adjustment of the compliance time that provides an acceptable level of safety may be used if approved by the Manager, Seattle ACO. Operators shall submit their requests through an appropriate FAA Principal Maintenance Inspector, who may add comments and then send it to the Manager, Seattle ACO.

Note 3: Information concerning the existence of approved alternative methods of compliance with this AD, if any, may be obtained from the Seattle ACO.

Special Flight Permits

(d) Special flight permits may be issued in accordance with sections 21.197 and 21.199 of the Federal Aviation Regulations (14 CFR 21.197 and 21.199) to operate the airplane to a location where the requirements of this AD can be accomplished.

Incorporation by Reference

(e) Except as provided by paragraph (b) of this AD, the actions shall be done in accordance with Boeing Service Bulletin 747–71–2290, dated March 18, 1999. This incorporation by reference was approved by the Director of the Federal Register in accordance with 5 U.S.C. 552(a) and 1 CFR part 51. Copies may be obtained from Boeing Commercial Airplane Group, P.O. Box 3707, Seattle, Washington 98124–2207. Copies may be inspected at the FAA, Transport Airplane Directorate, 1601 Lind Avenue, SW., Renton, Washington; or at the Office of the Federal Register, 800 North Capitol Street, NW., suite 700, Washington, DC.

Effective Date

(f) This amendment becomes effective on June 16, 2000.

Issued in Renton, Washington, on May 3, 2000.

Vi L. Lipski,

Acting Manager, Transport Airplane Directorate, Aircraft Certification Service.

[FR Doc. 00–11545 Filed 5–11–00; 8:45 am]

BILLING CODE 4910–13–U

DEPARTMENT OF TRANSPORTATION

Federal Aviation Administration

14 CFR Part 39

[Docket No. 99–NM–212–AD; Amendment 39–11716; AD 2000–09–07]

RIN 2120–AA64

Airworthiness Directives; McDonnell Douglas Model DC–10–10, –15, –30, –30F, and –40 Series Airplanes, and KC–10A (Military) Airplanes

AGENCY: Federal Aviation Administration, DOT.

ACTION: Final rule.

SUMMARY: This amendment adopts a new airworthiness directive (AD), applicable to certain McDonnell Douglas Model DC–10–10, –15, –30, –30F, and –40 series airplanes, and KC–10A (military) airplanes, that requires a one-time general visual inspection of circuit breakers to determine the manufacturer of the circuit breakers, and corrective action, if necessary. This amendment is prompted by incidents of smoke and electrical odor in the flight compartment and cabin area as a result of failure of circuit breakers. The actions specified by this AD are intended to prevent internal overheating and arcing of circuit breakers and airplane wiring due to long-term use and breakdown of internal components of the circuit breakers, which could result in smoke and fire in the flight compartment and main cabin.

DATES: Effective June 16, 2000.

The incorporation by reference of certain publications listed in the regulations is approved by the Director of the Federal Register as of June 16, 2000.

ADDRESSES: The service information referenced in this AD may be obtained from Boeing Commercial Aircraft Group, Long Beach Division, 3855 Lakewood Boulevard, Long Beach, California 90846, Attention: Technical Publications Business Administration, Dept. C1–L51 (2–60). This information may be examined at the Federal Aviation Administration (FAA), Transport Airplane Directorate, Rules Docket, 1601 Lind Avenue, SW., Renton, Washington; or at the FAA,

Transport Airplane Directorate, Los Angeles Aircraft Certification Office, 3960 Paramount Boulevard, Lakewood, California; or at the Office of the Federal Register, 800 North Capitol Street, NW., suite 700, Washington, DC.

FOR FURTHER INFORMATION CONTACT: Natalie Phan-Tran, Aerospace Engineer, Systems and Equipment Branch, ANM–130L, FAA, Transport Airplane Directorate, Los Angeles Aircraft Certification Office, 3960 Paramount Boulevard, Lakewood, California 90712–4137; telephone (562) 627–5343; fax (562) 627–5210.

SUPPLEMENTARY INFORMATION: A proposal to amend part 39 of the Federal Aviation Regulations (14 CFR part 39) to include an airworthiness directive (AD) that is applicable to certain McDonnell Douglas Model DC–10–10, –15, –30, –30F, and –40 series airplanes, and KC–10A (military) airplanes was published in the **Federal Register** on January 26, 2000 (65 FR 4188). That action proposed to require a one-time general visual inspection of circuit breakers to determine the manufacturer of the circuit breakers, and corrective action, if necessary.

Comments

Interested persons have been afforded an opportunity to participate in the making of this amendment. Due consideration has been given to the comments received.

Support for the Proposed Rule

Two commenters support the proposed rule.

Requests to Revise Compliance Times

One commenter requests that the compliance time for accomplishing the one-time general visual inspection be extended from the proposed 18 months to 26 months. The commenter states that such an extension will allow the inspection to be accomplished at a regularly scheduled maintenance visit. The commenter also states that the proposed 18-month compliance time would cause it to remove nine airplanes from service, which would cost $42,775 per airplane, per day.

The FAA partially concurs. The FAA finds that the compliance times can be extended somewhat. Extending the compliance time by 6 additional months will not adversely affect safety, and will allow the inspection to be performed at a base during regularly scheduled maintenance where special equipment and trained maintenance personnel will be available if necessary. Paragraph (a) of the final rule has been revised to specify a compliance time of 24 months.

Two commenters request that the compliance time for accomplishing the replacement of the circuit breaker be extended from the proposed ''prior to further flight'' to ''at the next scheduled maintenance visit, but not later than 18 months after the effective date of this AD.'' One commenter states that if there is a large number of suspect circuit breakers found during the inspection, there may not be sufficient spares available to return the airplane to service. The commenter also states that the requested extension will give operators and maintenance organizations time to order and replace the circuit breakers. Another commenter states that, because the number of circuit breakers cannot be determined on each airplane without accomplishing the proposed inspection, it would be difficult for operators to pre-order replacement units. As a result, airplanes could be grounded while waiting for parts.

The FAA has confirmed the parts availability problem and, therefore, concurs with the commenters' request. The FAA has determined that replacement of the circuit breaker at the next scheduled maintenance visit, but not later than 24 months after the effective date of this AD will not adversely affect safety. The final rule has been revised accordingly.

Conclusion

After careful review of the available data, including the comments noted above, the FAA has determined that air safety and the public interest require the adoption of the rule with the changes previously described. The FAA has determined that these changes will neither increase the economic burden on any operator nor increase the scope of the AD.

Cost Impact

There are approximately 412 airplanes of the affected design in the worldwide fleet. The FAA estimates that 300 airplanes of U.S. registry will be affected by this AD, it will take approximately 80 work hours per airplane to accomplish the required inspection of the circuit breakers (over 700 installed on each airplane), and that the average labor rate is $60 per work hour. Based on these figures, the cost impact of the AD on U.S. operators is estimated to be $1,440,000, or $4,800 per airplane.

The cost impact figure discussed above is based on assumptions that no operator has yet accomplished any of the requirements of this AD action, and that no operator would accomplish those actions in the future if this AD were not adopted.

Regulatory Impact

The regulations adopted herein will not have a substantial direct effect on the States, on the relationship between the national Government and the States, or on the distribution of power and responsibilities among the various levels of government. Therefore, it is determined that this final rule does not have federalism implications under Executive Order 13132.

For the reasons discussed above, I certify that this action (1) is not a ''significant regulatory action'' under Executive Order 12866; (2) is not a ''significant rule'' under DOT Regulatory Policies and Procedures (44 FR 11034, February 26, 1979); and (3) will not have a significant economic impact, positive or negative, on a substantial number of small entities under the criteria of the Regulatory Flexibility Act. A final evaluation has been prepared for this action and it is contained in the Rules Docket. A copy of it may be obtained from the Rules Docket at the location provided under the caption **ADDRESSES**.

List of Subjects in 14 CFR Part 39

Air transportation, Aircraft, Aviation safety, Incorporation by reference, Safety.

Adoption of the Amendment

Accordingly, pursuant to the authority delegated to me by the Administrator, the Federal Aviation Administration amends part 39 of the Federal Aviation Regulations (14 CFR part 39) as follows:

PART 39—AIRWORTHINESS DIRECTIVES

1. The authority citation for part 39 continues to read as follows:

Authority: 49 U.S.C. 106(g), 40113, 44701.

§ 39.13 [Amended]

2. Section 39.13 is amended by adding the following new airworthiness directive:

2000–09–07 McDonnell Douglas: Amendment 39–11716. Docket 99–NM–212–AD.

Applicability: Model DC–10–10, –15, –30, –30F, and –40 series airplanes, and KC–10A (military) airplanes, as listed in McDonnell Douglas Alert Service Bulletin DC10–24A161, dated October 29, 1999; certificated in any category.

Note 1: This AD applies to each airplane identified in the preceding applicability provision, regardless of whether it has been modified, altered, or repaired in the area subject to the requirements of this AD. For

airplanes that have been modified, altered, or repaired so that the performance of the requirements of this AD is affected, the owner/operator must request approval for an alternative method of compliance in accordance with paragraph (c) of this AD. The request should include an assessment of the effect of the modification, alteration, or repair on the unsafe condition addressed by this AD; and, if the unsafe condition has not been eliminated, the request should include specific proposed actions to address it.

Compliance: Required as indicated, unless accomplished previously.

To prevent internal overheating and arcing of circuit breakers and airplane wiring due to long-term use and breakdown of internal components of the circuit breakers, which could result in smoke and fire in the flight compartment and main cabin, accomplish the following:

Inspection and Replacement, if Necessary

(a) Within 24 months after effective date of this AD: Perform a one-time general visual inspection of circuit breakers to determine the manufacturer of the circuit breaker in accordance with McDonnell Douglas Alert Service Bulletin DC10–24A161, dated October 29, 1999.

Note 2: For the purposes of this AD, a general visual inspection is defined as: ''A visual examination of an interior or exterior area, installation, or assembly to detect obvious damage, failure, or irregularity. This level of inspection is made under normally available lighting conditions such as daylight, hangar lighting, flashlight, or drop-light, and may require removal or opening of access panels or doors. Stands, ladders, or platforms may be required to gain proximity to the area being checked.''

(1) If no Wood Electric Corporation or Wood Electric Division of Potter Brumfield Corporation circuit breaker is found, no further action is required by this paragraph.

(2) If any Wood Electric Corporation or Wood Electric Division of Potter Brumfield Corporation circuit breaker is found, at the next scheduled maintenance visit, but not later than 24 months after the effective date of this AD, replace the circuit breaker with a new circuit breaker in accordance with the service bulletin.

Spares

(b) As of the effective date of this AD, no person shall install, on any airplane, a circuit breaker, part number 104–205–104, 104–210–104, 104–215–104, 104–220–104, 104–225–104, 104–230–104, 104–235–104, 104–250–104, 447–205–102, 448–205–102, 505–205–102, 506–205–102, 447–507–102, 448–507–102, 505–507–102, 506–507–102, 447–210–102, 448–210–102, 505–210–102, 506–210–102, 447–215–102, 448–215–102, 505–215–102, 506–215–102, 447–220–102, 448–220–102, 505–220–102, 506–220–102, 447–225–102, 448–225–102, 505–225–102, 506–225–102, 448–235–102, 505–235–102, 506–235–102.

Alternative Methods of Compliance

(c) An alternative method of compliance or adjustment of the compliance time that provides an acceptable level of safety may be used if approved by the Manager, Los Angeles Aircraft Certification Office (ACO), FAA, Transport Airplane Directorate. Operators shall submit their requests through an appropriate FAA Principal Maintenance Inspector, who may add comments and then send it to the Manager, Los Angeles ACO.

Note 3: Information concerning the existence of approved alternative methods of compliance with this AD, if any, may be obtained from the Los Angeles ACO.

Special Flight Permits

(d) Special flight permits may be issued in accordance with sections 21.197 and 21.199 of the Federal Aviation Regulations (14 CFR 21.197 and 21.199) to operate the airplane to a location where the requirements of this AD can be accomplished.

Incorporation by Reference

(e) The actions shall be done in accordance with McDonnell Douglas Alert Service Bulletin DC10–24A161, dated October 29, 1999. This incorporation by reference was approved by the Director of the Federal Register in accordance with 5 U.S.C. 552(a) and 1 CFR part 51. Copies may be obtained from Boeing Commercial Aircraft Group, Long Beach Division, 3855 Lakewood Boulevard, Long Beach, California 90846, Attention: Technical Publications Business Administration, Dept. C1–L51 (2–60). Copies may be inspected at the FAA, Transport Airplane Directorate, 1601 Lind Avenue, SW., Renton, Washington; or at the FAA, Transport Airplane Directorate, Los Angeles Aircraft Certification Office, 3960 Paramount Boulevard, Lakewood, California; or at the Office of the Federal Register, 800 North Capitol Street, NW., suite 700, Washington, DC.

(f) This amendment becomes effective on June 16, 2000.

Issued in Renton, Washington, on May 3, 2000.

Vi L. Lipski,

Acting Manager, Transport Airplane Directorate, Aircraft Certification Service.

[FR Doc. 00–11544 Filed 5–11–00; 8:45 am]

BILLING CODE 4910–13–P

DEPARTMENT OF TRANSPORTATION

Federal Aviation Administration

14 CFR Part 39

[Docket No. 99–NM–362–AD; Amendment 39–11719; AD 2000–09–10]

RIN 2120–AA64

Airworthiness Directives; Airbus Model A300–600 Series Airplanes

AGENCY: Federal Aviation Administration, DOT.

ACTION: Final rule.

SUMMARY: This amendment adopts a new airworthiness directive (AD), applicable to certain Airbus Model A300–600 series airplanes, that requires modification of certain electrical looms of the nose and main landing gear and modification of the rotor shaft attachment of the nose and main landing gear tachometers. This amendment is prompted by issuance of mandatory continuing airworthiness information by a foreign civil airworthiness authority. The actions specified by this AD are intended to prevent erratic operation of the wheel tachometers, which could result in degradation of the braking performance, and possible increased landing roll.

DATES: Effective June 16, 2000.

The incorporation by reference of certain publications listed in the regulations is approved by the Director of the Federal Register as of June 16, 2000.

ADDRESSES: The service information referenced in this AD may be obtained from Airbus Industrie, 1 Rond Point Maurice Bellonte, 31707 Blagnac Cedex, France. This information may be examined at the Federal Aviation Administration (FAA), Transport Airplane Directorate, Rules Docket, 1601 Lind Avenue, SW., Renton, Washington; or at the Office of the Federal Register, 800 North Capitol Street, NW., suite 700, Washington, DC.

FOR FURTHER INFORMATION CONTACT: Norman B. Martenson, Manager, International Branch, ANM–116, FAA, Transport Airplane Directorate, 1601 Lind Avenue, SW., Renton, Washington 98055–4056; telephone (425) 227–2110; fax (425) 227–1149.

SUPPLEMENTARY INFORMATION: A proposal to amend part 39 of the Federal Aviation Regulations (14 CFR part 39) to include an airworthiness directive (AD) that is applicable to certain Airbus Model A300–600 series airplanes was published in the **Federal Register** on February 24, 2000 (65 FR 9223). That action proposed to require modification of certain electrical looms of the nose and main landing gear and modification of the rotor shaft attachment of the nose and main landing gear tachometers.

Comments

Interested persons have been afforded an opportunity to participate in the making of this amendment. No comments were submitted in response to the proposal or the FAA's determination of the cost to the public.

Conclusion

The FAA has determined that air safety and the public interest require the adoption of the rule as proposed.

Cost Impact

The FAA estimates that 79 airplanes of U.S. registry will be affected by this AD.

It will take approximately 7 work hours per airplane to accomplish the required modification of the electrical looms, at an average labor rate of $60 per work hour. Required parts will cost approximately $687 per airplane. Based on these figures, the cost impact of the modification of the electrical looms required by this AD on U.S. operators is estimated to be $87,453, or $1,107 per airplane.

It will take approximately 13 work hours per airplane to accomplish the required modification of the rotor shaft attachment, at an average labor rate of $60 per work hour. Required parts will cost approximately $169 per airplane. Based on these figures, the cost impact of the modification of the rotor shaft attachment required by this AD on U.S. operators is estimated to be $74,971, or $949 per airplane.

The cost impact figures discussed above are based on assumptions that no operator has yet accomplished any of the proposed requirements of this AD action, and that no operator would accomplish those actions in the future if this AD were not adopted.

Regulatory Impact

The regulations adopted herein will not have a substantial direct effect on the States, on the relationship between the national Government and the States, or on the distribution of power and responsibilities among the various levels of government. Therefore, it is determined that this final rule does not have federalism implications under Executive Order 13132.

For the reasons discussed above, I certify that this action (1) is not a ''significant regulatory action'' under Executive Order 12866; (2) is not a ''significant rule'' under DOT Regulatory Policies and Procedures (44 FR 11034, February 26, 1979); and (3) will not have a significant economic impact, positive or negative, on a substantial number of small entities under the criteria of the Regulatory Flexibility Act. A final evaluation has been prepared for this action and it is contained in the Rules Docket. A copy of it may be obtained from the Rules Docket at the location provided under the caption **ADDRESSES**.

List of Subjects in 14 CFR Part 39

Air transportation, Aircraft, Aviation safety, Incorporation by reference, Safety.

Adoption of the Amendment

Accordingly, pursuant to the authority delegated to me by the Administrator, the Federal Aviation Administration amends part 39 of the Federal Aviation Regulations (14 CFR part 39) as follows:

PART 39—AIRWORTHINESS DIRECTIVES

1. The authority citation for part 39 continues to read as follows:

Authority: 49 U.S.C. 106(g), 40113, 44701.

§ 39.13 [Amended]

2. Section 39.13 is amended by adding the following new airworthiness directive:

2000–09–10 Airbus Industrie: Amendment 39–11719. Docket 99–NM–362–AD.

Applicability: Model A300–600 series airplanes, certificated in any category, except those airplanes on which Airbus Modifications 11661 and 11676 (Airbus Service Bulletin A300–32–6069) and 12095 (Airbus Service Bulletin A300–32–6077) have been installed.

Note 1: This AD applies to each airplane identified in the preceding applicability provision, regardless of whether it has been otherwise modified, altered, or repaired in the area subject to the requirements of this AD. For airplanes that have been modified, altered, or repaired so that the performance of the requirements of this AD is affected, the owner/operator must request approval for an alternative method of compliance in accordance with paragraph (b) of this AD. The request should include an assessment of the effect of the modification, alteration, or repair on the unsafe condition addressed by this AD; and, if the unsafe condition has not been eliminated, the request should include specific proposed actions to address it.

Compliance: Required as indicated, unless accomplished previously.

To prevent erratic operation of the wheel tachometers, which could result in degradation of the braking performance, and possible increased landing roll, accomplish the following:

Modifications

(a) Within 18 months after the effective date of this AD, accomplish the requirements of paragraphs (a)(1) and (a)(2) of this AD.

(1) Modify the electrical looms of the nose and main landing gear, in accordance with Airbus Service Bulletin A300–32–6069, Revision 01, dated December 29, 1999; and

(2) Modify the rotor shaft attachment of the nose and main landing gear tachometers, in accordance with Airbus Service Bulletin A300–32–6077, Revision 01, dated September 25, 1999.

Note 2: Messier-Dowty Service Bulletins 470–32–779, dated April 14, 1997, and 470–32–777, dated July 1, 1997, are referenced in Airbus Service Bulletin A300–32–6069. Messier-Bugatti Service Bulletin C20105–32–782, dated October 17, 1996, is referenced in Airbus Service Bulletin A300–32–6077. The Messier-Dowty and Messier-Bugatti service bulletins are additional sources of service information for accomplishing the applicable actions required by this AD.

Note 3: Accomplishment of the modifications required by paragraph (a) of this AD, prior to the effective date of this AD, in accordance with Airbus Service Bulletin A300–32–6069, dated June 13, 1997, or A300–32–6077, dated May 28, 1999, is considered acceptable for compliance with the applicable requirements specified by this AD.

Alternative Methods of Compliance

(b) An alternative method of compliance or adjustment of the compliance time that provides an acceptable level of safety may be used if approved by the Manager, International Branch, ANM–116, FAA, Transport Airplane Directorate. Operators shall submit their requests through an appropriate FAA Principal Maintenance Inspector, who may add comments and then send it to the Manager, International Branch, ANM–116.

Note 4: Information concerning the existence of approved alternative methods of compliance with this AD, if any, may be obtained from the International Branch, ANM–116.

Special Flight Permits

(c) Special flight permits may be issued in accordance with sections 21.197 and 21.199 of the Federal Aviation Regulations (14 CFR 21.197 and 21.199) to operate the airplane to a location where the requirements of this AD can be accomplished.

Incorporation by Reference

(d) The modifications shall be done in accordance with Airbus Service Bulletin A300–32–6069, Revision 01, dated December 29, 1999; and Airbus Service Bulletin A300–32–6077, Revision 01, dated September 25, 1999. This incorporation by reference was approved by the Director of the Federal Register in accordance with 5 U.S.C. 552(a) and 1 CFR part 51. Copies may be obtained from Airbus Industrie, 1 Rond Point Maurice Bellonte, 31707 Blagnac Cedex, France. Copies may be inspected at the FAA, Transport Airplane Directorate, 1601 Lind Avenue, SW., Renton, Washington; or at the Office of the Federal Register, 800 North Capitol Street, NW., suite 700, Washington, DC.

Note 5: The subject of this AD is addressed in French airworthiness directive 1999–428–295(B), dated November 3, 1999.

(e) This amendment becomes effective on June 16, 2000.

Issued in Renton, Washington, on May 3, 2000.

Vi L. Lipski,

Acting Manager, Transport Airplane Directorate, Aircraft Certification Service.

[FR Doc. 00–11548 Filed 5–11–00; 8:45 am]

BILLING CODE 4910–13–P

DEPARTMENT OF TRANSPORTATION

Federal Aviation Administration

14 CFR Part 39

[Docket No. 99–NM–372–AD; Amendment 39–11721; AD 2000–09–12]

RIN 2120–AA64

Airworthiness Directives; Raytheon (Beech) Model 400A and 400T Series Airplanes

AGENCY: Federal Aviation Administration, DOT.

ACTION: Final rule.

SUMMARY: This amendment adopts a new airworthiness directive (AD), applicable to certain Raytheon (Beech) Model 400A and 400T series airplanes, that requires replacement of temperature switch assemblies of the wing ice protection system with new, improved parts. This amendment is prompted by reports of electrical continuity problems with solder joints on the temperature switches of the wing ice protection system. The actions specified by this AD are intended to prevent detachment or breakage of wires in the temperature switch assemblies of the wing ice protection system. Such detachment or breakage of wires could result in the flightcrew not being advised of an over-temperature situation on the leading edge of the wing, which could result in structural damage to the wing.

DATES: Effective June 16, 2000.

The incorporation by reference of certain publications listed in the regulations is approved by the Director of the Federal Register as of June 16, 2000.

ADDRESSES: The service information referenced in this AD may be obtained from Raytheon Aircraft Company, Manager Service Engineering, Beechjet/Premier Technical Support Department, P.O. Box 85, Wichita, Kansas 67201–0085. This information may be examined at the Federal Aviation Administration (FAA), Transport Airplane Directorate, Rules Docket, 1601 Lind Avenue, SW., Renton, Washington; or at the FAA, Small Airplane Directorate, Wichita Aircraft Certification Office, 1801 Airport Road, Room 100, Mid-Continent Airport, Wichita, Kansas; or at the Office of the Federal Register, 800 North Capitol Street, NW., suite 700, Washington, DC.

FOR FURTHER INFORMATION CONTACT: Philip Petty, Aerospace Engineer, Systems and Propulsion Branch, ACE–116W, FAA, Small Airplane Directorate, Wichita Aircraft Certification Office, 1801 Airport Road, Room 100, Mid-Continent Airport, Wichita, Kansas 67209; telephone (316) 946–4139; fax (316) 946–4407.

SUPPLEMENTARY INFORMATION: A proposal to amend part 39 of the Federal Aviation Regulations (14 CFR part 39) to include an airworthiness directive (AD) that is applicable to certain Raytheon (Beech) Model 400A and 400T series airplanes was published in the **Federal Register** on January 12, 2000 (65 FR 1836). That action proposed to require replacement of temperature switch assemblies of the wing ice protection system with new, improved parts.

Comments

Interested persons have been afforded an opportunity to participate in the making of this amendment. No comments were submitted in response to the proposal or the FAA's determination of the cost to the public.

Conclusion

The FAA has determined that air safety and the public interest require the adoption of the rule as proposed.

Cost Impact

There are approximately 404 airplanes of the affected design in the worldwide fleet. The FAA estimates that 366 airplanes of U.S. registry will be affected by this AD, that it will take approximately 30 work hours per airplane to accomplish the required replacement, and that the average labor rate is $60 per work hour. Required parts will be provided by the manufacturer at no cost to the operators. Based on these figures, the cost impact of the AD on U.S. operators is estimated to be $658,800, or $1,800 per airplane.

The cost impact figure discussed above is based on assumptions that no operator has yet accomplished any of the requirements of this AD action, and that no operator would accomplish those actions in the future if this AD were not adopted.

Regulatory Impact

The regulations adopted herein will not have a substantial direct effect on the States, on the relationship between the national Government and the States, or on the distribution of power and responsibilities among the various levels of government. Therefore, it is determined that this final rule does not have federalism implications under Executive Order 13132.

For the reasons discussed above, I certify that this action (1) is not a ''significant regulatory action'' under Executive Order 12866; (2) is not a ''significant rule'' under DOT Regulatory Policies and Procedures (44 FR 11034, February 26, 1979); and (3) will not have a significant economic impact, positive or negative, on a substantial number of small entities under the criteria of the Regulatory Flexibility Act. A final evaluation has been prepared for this action and it is contained in the Rules Docket. A copy of it may be obtained from the Rules Docket at the location provided under the caption **ADDRESSES**.

List of Subjects in 14 CFR Part 39

Air transportation, Aircraft, Aviation safety, Incorporation by reference, Safety.

Adoption of the Amendment

Accordingly, pursuant to the authority delegated to me by the Administrator, the Federal Aviation Administration amends part 39 of the Federal Aviation Regulations (14 CFR part 39) as follows:

PART 39—AIRWORTHINESS DIRECTIVES

1. The authority citation for part 39 continues to read as follows:

Authority: 49 U.S.C. 106(g), 40113, 44701.

§ 39.13 [Amended]

2. Section 39.13 is amended by adding the following new airworthiness directive:

2000–09–12 Raytheon Aircraft Company (Formerly Beech): Amendment 39–11721. Docket 99–NM–372–AD.

Applicability: Model 400A series airplanes, having serial numbers RK–01 through RK–188 inclusive; Model 400T (T–1A) series airplanes, having serial numbers TT–01 through TT–180 inclusive; and Model 400T (TX) series airplanes, having serial numbers TX–01 through TX–09 inclusive; certificated in any category.

Note 1: This AD applies to each airplane identified in the preceding applicability provision, regardless of whether it has been modified, altered, or repaired in the area subject to the requirements of this AD. For airplanes that have been modified, altered, or repaired so that the performance of the requirements of this AD is affected, the owner/operator must request approval for an alternative method of compliance in accordance with paragraph (c) of this AD. The request should include an assessment of the effect of the modification, alteration, or repair on the unsafe condition addressed by this AD; and, if the unsafe condition has not been eliminated, the request should include specific proposed actions to address it.

Compliance: Required as indicated, unless accomplished previously.

To prevent detachment or breakage of wires in the temperature switch assemblies of the wing ice protection system, which could result in the flightcrew not being advised of an over-temperature situation on the leading edge of the wing, and consequent structural damage to the wing, accomplish the following:

Replacement

(a) At the next scheduled inspection, but no later than 200 flight hours after the effective date of this AD, replace temperature switch assemblies of the wing ice protection system with new, improved temperature switch assemblies, in accordance with Raytheon Service Bulletin 30–3008, Revision 1, dated August 1999.

Note 2: Replacements accomplished prior to the effective date of this AD in accordance with Raytheon Service Bulletin 30–3008, dated March 1999, are considered acceptable for compliance with the applicable action specified in this AD.

Spares

(b) As of the effective date of this AD, no person shall install, on any airplane, a temperature switch assembly having a part number listed in the ''Old Part Number'' column of the table in 2.D. of Raytheon Service Bulletin 30–3008, Revision 1, dated August 1999.

Alternative Methods of Compliance

(c) An alternative method of compliance or adjustment of the compliance time that provides an acceptable level of safety may be used if approved by the Manager, Wichita Aircraft Certification Office (ACO), FAA, Small Airplane Directorate. Operators shall submit their requests through an appropriate FAA Principal Maintenance Inspector, who may add comments and then send it to the Manager, Wichita ACO.

Note 3: Information concerning the existence of approved alternative methods of compliance with this AD, if any, may be obtained from the Wichita ACO.

Special Flight Permits

(d) Special flight permits may be issued in accordance with sections 21.197 and 21.199 of the Federal Aviation Regulations (14 CFR 21.197 and 21.199) to operate the airplane to a location where the requirements of this AD can be accomplished.

Incorporation by Reference

(e) The replacement shall be done in accordance with Raytheon Service Bulletin 30–3008, Revision 1, dated August 1999. This incorporation by reference was approved by the Director of the Federal Register in accordance with 5 U.S.C. 552(a) and 1 CFR part 51. Copies may be obtained from Raytheon Aircraft Company, Manager Service Engineering, Beechjet/Premier Technical Support Department, P.O. Box 85, Wichita, Kansas 67201–0085. Copies may be inspected at the FAA, Transport Airplane Directorate, 1601 Lind Avenue, SW., Renton, Washington; or at the FAA, Small Airplane Directorate, Wichita Aircraft Certification Office, 1801 Airport Road, Room 100, Mid-Continent Airport, Wichita, Kansas; or at the Office of the Federal Register, 800 North Capitol Street, NW., suite 700, Washington, DC.

(f) This amendment becomes effective on June 16, 2000.

Issued in Renton, Washington, on May 3, 2000.

Vi L. Lipski,

Acting Manager, Transport Airplane Directorate, Aircraft Certification Service.

[FR Doc. 00–11549 Filed 5–11–00; 8:45 am]

BILLING CODE 4910–13–P

DEPARTMENT OF TRANSPORTATION

Federal Aviation Administration

14 CFR Part 39

[Docket No. 99–NM–305–AD; Amendment 39–11718; AD 2000–09–09]

RIN 2120–AA64

Airworthiness Directives; EMBRAER Model EMB–145 Series Airplanes

AGENCY: Federal Aviation Administration, DOT.

ACTION: Final rule.

SUMMARY: This amendment supersedes an existing airworthiness directive (AD), applicable to certain EMBRAER Model EMB–145 series airplanes, that currently requires revisions to the Airplane Flight Manual (AFM) to provide the flight crew with updated procedures for prohibiting use of the autopilot below 1,500 feet above ground level, emergency procedures for pitch trim runaway, and abnormal procedures for autopilot trim failure and stabilizer out of trim. That AD also requires installation of certain warning placards. This amendment requires replacement of a certain integrated computer with a new integrated computer; installation of an upgraded integrated computers checklist; and removal of certain placards and certain limitations in the AFM. This amendment is prompted by issuance of mandatory continuing airworthiness information by a foreign civil airworthiness authority. The actions specified by this AD are intended to prevent failure of the pitch trim system, which could cause undetected autopilot trim runaway, and consequent reduced controllability of the airplane, uncommanded autopilot disconnect, and excessive altitude loss.

DATES: Effective June 16, 2000.

The incorporation by reference of EMBRAER Service Bulletin S.B. 145–31–0010, dated March 18, 1999, as listed in the regulations, is approved by the Director of the Federal Register as of June 16, 2000.

The incorporation by reference of EMBRAER Alert Service Bulletin, S.B. 145–31–A010, dated December 15, 1998, as listed in the regulations, was previously approved by the Director of the Federal Register as of February 2, 1999 (64 FR 4521, January 29, 1999).

ADDRESSES: The service information referenced in this AD may be obtained from Empresa Brasileira de Aeronautica S.A. (EMBRAER), P.O. Box 343—CEP 12.225, Sao Jose dos Campos—SP, Brazil. This information may be examined at the Federal Aviation Administration (FAA), Transport Airplane Directorate, Rules Docket, 1601 Lind Avenue, SW., Renton, Washington; or at the FAA, Small Airplane Directorate, Atlanta Aircraft Certification Office, One Crown Center, 1895 Phoenix Boulevard, suite 450, Atlanta, Georgia; or at the Office of the **Federal Register**, 800 North Capitol Street, NW., suite 700, Washington, DC.

FOR FURTHER INFORMATION CONTACT: Rob Capezzuto, Aerospace Engineer, Systems and Flight Test Branch, ACE–116A, FAA, Small Airplane Directorate, Atlanta Aircraft Certification Office, One Crown Center, 1895 Phoenix Boulevard, suite 450, Atlanta, Georgia 30349; telephone (770) 703–6071; fax (770) 703–6097.

SUPPLEMENTARY INFORMATION: A proposal to amend part 39 of the Federal Aviation Regulations (14 CFR part 39) by superseding AD 99–01–12, amendment 39–11015 (64 FR 4521, January 29, 1999), which is applicable to certain EMBRAER Model EMB–145 series airplanes, was published in the **Federal Register** on December 29, 1999 (64 FR 72964). The action proposed to require revisions to the Airplane Flight Manual to provide the flight crew with updated procedures for prohibiting use of the autopilot below 1,500 feet above ground level, emergency procedures for pitch trim runaway, and abnormal procedures for autopilot trim failure and stabilizer out of trim. That AD also requires installation of certain warning placards. This amendment requires replacement of a certain integrated

computer with a new integrated computer; installation of an upgraded integrated computers checklist; and removal of certain placards and certain limitations in the AFM.

Comments

Interested persons have been afforded an opportunity to participate in the making of this amendment. No comments were submitted in response to the proposal or the FAA's determination of the cost to the public.

Conclusion

The FAA has determined that air safety and the public interest require the adoption of the rule as proposed.

Cost Impact

There are approximately 46 airplanes of U.S. registry that will be affected by this AD.

The actions that are currently required by AD 99–01–12, and retained in this AD, take approximately 1 work hour per airplane to accomplish, at an average labor rate of $60 per work hour. Based on these figures, the cost impact of the currently required actions on U.S. operators is estimated to be $2,760, or $60 per airplane.

The new integrated computer replacement, checklist installation and placard removals that are required by this AD action take approximately 1 work hour per airplane to accomplish, at an average labor rate of $60 per work hour. Required parts will cost approximately $675 per airplane. Based on these figures, the cost impact of the requirements of this AD on U.S. operators is estimated to be $33,810, or $735 per airplane.

The removal of AFM limitations that is required by this AD action takes approximately 1 work hour per airplane to accomplish. Based on these figures, the cost impact of the requirements of this AD on U.S. operators is estimated to be $2,760, or $60 per airplane.

The cost impact figures discussed above are based on assumptions that no operator has yet accomplished any of the requirements of this AD action, and that no operator would accomplish those actions in the future if this AD were not adopted.

Regulatory Impact

The regulations adopted herein will not have a substantial direct effect on the States, on the relationship between the national Government and the States, or on the distribution of power and responsibilities among the various levels of government. Therefore, it is determined that this final rule does not have federalism implications under Executive Order 13132.

For the reasons discussed above, I certify that this action (1) is not a ''significant regulatory action'' under Executive Order 12866; (2) is not a ''significant rule'' under DOT Regulatory Policies and Procedures (44 FR 11034, February 26, 1979); and (3) will not have a significant economic impact, positive or negative, on a substantial number of small entities under the criteria of the Regulatory Flexibility Act. A final evaluation has been prepared for this action and it is contained in the Rules Docket. A copy of it may be obtained from the Rules Docket at the location provided under the caption **ADDRESSES**.

List of Subjects in 14 CFR Part 39

Air transportation, Aircraft, Aviation safety, Incorporation by reference, Safety.

Adoption of the Amendment

Accordingly, pursuant to the authority delegated to me by the Administrator, the Federal Aviation Administration amends part 39 of the Federal Aviation Regulations (14 CFR part 39) as follows:

PART 39—AIRWORTHINESS DIRECTIVES

1. The authority citation for part 39 continues to read as follows:

Authority: 49 U.S.C. 106(g), 40113, 44701.

§ 39.13 [Amended]

2. Section 39.13 is amended by removing amendment 39–11015 (64 FR 4521, January 29, 1999), and by adding a new airworthiness directive (AD), amendment 39–11718, to read as follows:

2000–09–09 Empresa Brasileira De Aeronautica S.A. (EMBRAER): Amendment 39–11718. Docket 99–NM–305–AD. Supersedes AD 99–01–12, Amendment 39–11015.

Applicability: Model EMB–145 series airplanes, serial numbers 145004 through 145047 inclusive and 145049 through 145051 inclusive; certificated in any category; equipped with IC–600 #1 having part number (P/N) 7017000–82402; excluding those airplanes on which the modification specified in any of the following EMBRAER service bulletins has been accomplished: EMBRAER Service Bulletin S.B. 145–22–0001, dated May 7, 1998; EMBRAER Service Bulletin S.B. 145–22–0004, Revision 01, dated July 30, 1998; EMBRAER Service Bulletin S.B. 145–31–0007, Revision 02, dated June 30, 1998.

Note 1: This AD applies to each airplane identified in the preceding applicability provision, regardless of whether it has been otherwise modified, altered, or repaired in the area subject to the requirements of this AD. For airplanes that have been modified, altered, or repaired so that the performance of the requirements of this AD is affected, the owner/operator must request approval for an alternative method of compliance in accordance with paragraph (c) of this AD. The request should include an assessment of the effect of the modification, alteration, or repair on the unsafe condition addressed by this AD; and, if the unsafe condition has not been eliminated, the request should include specific proposed actions to address it.

Compliance: Required as indicated, unless accomplished previously.

To prevent failure of the pitch trim system, which could cause undetected autopilot trim runaway, and result in reduced controllability of the airplane, uncommanded autopilot disconnect, and excessive altitude loss; accomplish the following:

Restatement of Requirements of AD 99–01–12

Placard Installation and AFM Revision

(a) Within 20 flight hours after February 2, 1999 (the effective date of AD 99–01–12, amendment 39–11015), accomplish paragraphs (a)(1), (a)(2), (a)(3), and (a)(4) of this AD.

(1) Install warning placards, P/N 145–39641–001, on the left and right sides of the cockpit glare shield panel, using double-face tape (or similar), in accordance with EMBRAER Alert Service Bulletin S.B. 145–31–A010, dated December 15, 1998, which states:

''DO NOT OPERATE AUTOPILOT BELOW 1,500 FT A.G.L.''

(2) Revise the Limitations Section of the FAA-approved Airplane Flight Manual (AFM) (in the ''AUTOPILOT'' section) to include the information contained in this paragraph of the AD. This may be accomplished by inserting a copy of this AD in the AFM.

''Autopilot

THE USE OF AUTOPILOT BELOW 1,500 FEET IS PROHIBITED.''

(3) Revise the Emergency Procedures Section of the FAA-approved AFM (in the ''PITCH TRIM RUNAWAY'' section) to include the following statement. This may be accomplished by inserting a copy of this AD in the AFM.

''Pitch Trim Runaway

Immediately and simultaneously:
Control Column—HOLD FIRMLY
Quick Disconnect Button—PRESS AND HOLD
Pitch Trim Main System—OFF
Pitch Trim Back Up System—OFF
Quick Disconnect Button—RELEASE
If control column forces are excessive, try to recover airplane control by turning one system on and trimming the airplane as necessary. Initiate with the backup system. Leave the failed system off.
If neither system is operative:
PITCH TRIM INOPERATIVE Procedure—COMPLETE
Autopilot—OFF

Do not use the autopilot for the remainder of the flight.''

(4) Revise the Abnormal Procedures Section of the FAA-approved AFM (in the ''AUTOPILOT'' section) to include the following statement. This may be accomplished by inserting a copy of this AD in the AFM.

''Autopilot Trim Failed

PITCH TRIM RUNAWAY Procedure—PERFORM

Stabilizer Out of Trim

PITCH TRIM RUNAWAY Procedure—PERFORM''

New Requirements of this Ad

Terminating Action

(b) Within 500 flight hours after the effective date of this AD, accomplish paragraphs (b)(1) and (b)(2) of this AD. Accomplishment of paragraph (b) of this AD constitutes terminating action for the requirements of paragraph (a) of this AD.

(1) Replace the integrated computer IC–600 #1, P/N 7017000–82402, with a new integrated computer, P/N 7017000–82422; install an upgraded integrated computers checklist; and remove warning placards, P/N 145–39641–001, on the left and right sides of the cockpit glare shield panel required by paragraph (a)(1) of this AD; in accordance with EMBRAER Service Bulletin S.B. 145–31–0010, dated March 18, 1999.

Note 2: Installation of an upgraded integrated computers checklist is required only if an integrated computers checklist is currently installed on the airplane.

(2) Remove the limitations required by paragraphs (a)(2), (a)(3), and (a)(4) of this AD from the AFM.

Alternative Methods of Compliance

(c) An alternative method of compliance or adjustment of the compliance time that provides an acceptable level of safety may be used if approved by the Manager, Atlanta Aircraft Certification Office (ACO), FAA, Small Airplane Directorate. Operators shall submit their requests through an appropriate FAA Principal Maintenance/Operations Inspector, who may add comments and then send it to the Manager, Atlanta ACO.

Note 3: Information concerning the existence of approved alternative methods of compliance with this AD, if any, may be obtained from the Atlanta ACO.

Special Flight Permits

(d) Special flight permits may be issued in accordance with sections 21.197 and 21.199 of the Federal Aviation Regulations (14 CFR 21.197 and 21.199) to operate the airplane to a location where the requirements of this AD can be accomplished.

Incorporation by Reference

(e) Except as provided by paragraph (a)(2) of this AD: The actions shall be done in accordance with EMBRAER Alert Service Bulletin S.B. 145–31-A010, dated December 15, 1998, and EMBRAER Service Bulletin S.B. 145–31–0010, dated March 18, 1999.

(1) The incorporation by reference of EMBRAER Service Bulletin S.B. 145–31–0010, dated March 18, 1999, is approved by the Director of the Federal Register in accordance with 5 U.S.C. 552(a) and 1 CFR part 51.

(2) The incorporation by reference of EMBRAER Alert Service Bulletin S.B. 145–31-A010, dated December 15, 1998, was previously approved by the Director of the Federal Register as of February 2, 1999 (64 FR 4521, January 29, 1999).

(3) Copies may be obtained from Empresa Brasileira de Aeronautica S.A. (EMBRAER), P.O. Box 343—CEP 12.225, Sao Jose dos Campos—SP, Brazil. Copies may be inspected at the FAA, Transport Airplane Directorate, 1601 Lind Avenue, SW., Renton, Washington; or at the FAA, Small Airplane Directorate, Atlanta Aircraft Certification Office, One Crown Center, 1895 Phoenix Boulevard, suite 450, Atlanta, Georgia; or at the Office of the Federal Register, 800 North Capitol Street, NW., suite 700, Washington, DC.

Note 4: The subject of this AD is addressed in Brazilian airworthiness directive 98–12–01R1, dated May 26, 1999.

(f) This amendment becomes effective on June 16, 2000.

Issued in Renton, Washington, on May 3, 2000.

Vi L. Lipski,

Acting Manager, Transport Airplane Directorate, Aircraft Certification Service.

[FR Doc. 00–11547 Filed 5–11–00; 8:45 am]

BILLING CODE 4910–13–U

DEPARTMENT OF TRANSPORTATION

Federal Aviation Administration

14 CFR Part 71

[Airspace Docket No. 00–ASO–4]

Establishment of Class E Airspace; Andrews—Murphy, NC; Correction

AGENCY: Federal Aviation Administration (FAA), DOT.

ACTION: Final rule; correction.

SUMMARY: This action corrects an error in the airspace description of a final rule that was published in the **Federal Register** on March 31, 2000 (65 FR 17133), Airspace Docket No. 00–ASO–4. The final rule establishes Class E airspace at Andrews—Murphy, NC.

EFFECTIVE DATE: Effective 0901 UTC, June 15, 2000.

FOR FURTHER INFORMATION CONTACT: Nancy B. Shelton, Manager, Airspace Branch, Air Traffic Division, Federal Aviation Administration, P.O. Box 20636, Atlanta, Georgia 30320; telephone (404) 305–5627.

SUPPLEMENTARY INFORMATION:

History

Federal Register Document 00–7959, Airspace Docket No. 00–AS0–4, published on March 31, 2000 (65 FR 17133), established Class E airspace at Andrews—Murphy, NC. The airspace description inadvertently omitted language excluding the Class E airspace area at Knoxville, TN. This action corrects the error.

Correction to Final Rule

Accordingly, pursuant to the authority delegated to me, the airspace description for the Class E airspace area at Andrews—Murphy, NC, incorporated by reference at § 71–1 and published in the **Federal Register** on March 31, 2000 (65 FR 17133), is corrected as follows:

§ 71.1 [Corrected]

ASO NC E5 Andrews—Murphy, NC [Corrected]

1. On page 17134, column 1, line 2, correct the airspace description by adding ''; excluding that airspace within the Knoxville, TN, Class E airspace'' after ''NC''.

Issued in College Park, Georgia, on April 20, 2000.

Nancy B. Shelton,

Acting Manager, Air Traffic Division, Southern Region.

[FR Doc. 00–10714 Filed 5–11–00; 8:45 am]

BILLING CODE 4910–13–M

DEPARTMENT OF JUSTICE

Drug Enforcement Administration

21 CFR Part 1301

[DEA–200S]

Schedules of Controlled Substances: Addition of Gamma-Hydroxybutyric Acid to Schedule I; Extension of Application of Order Form Requirement for Certain Persons

AGENCY: Drug Enforcement Administration (DEA), Justice.

ACTION: Supplementary statement to final rule.

SUMMARY: On March 13, 2000, DEA published a final rule (65 FR 13235) implementing the provisions of Pub. L. 106–172 ''The Samantha Reid and Hillory J. Farias Date-Rape Prevention Act of 1999'', placing gamma-hydroxybutyric acid (GHB) and its salts, isomers, and salts of isomers into Schedule I of the Controlled Substances Act (CSA). The final rule placed Food and Drug Administration (FDA) approved products containing GHB in Schedule III, if or when these products are approved. The final rule required that any person who manufactures, distributes, dispenses, imports or

exports GHB or who engages in research or conducts instructional activities with GHB, or who proposes to engage in such activities, submit an application for Schedule I registration in accordance with Title 21, Code of Federal Regulations (CFR), Part 1301 by May 12, 2000. Persons wishing to handle GHB for any of the above listed purposes must conduct all transactions using DEA Form 222, U.S. Official Order Forms for Schedule I and II Controlled Substances. Since these forms are provided only to registrants, this notice is providing an extension in the application of the order form requirement for GHB for persons submitting a registration application by May 12, 2000.

FOR FURTHER INFORMATION CONTACT: Patricia M. Good, Chief, Liaison and Policy Section, Office of Diversion Control, Drug Enforcement Administration, Washington, D.C. 20537, Telephone (202) 307–7297.

SUPPLEMENTARY INFORMATION:

What Did DEA's Final Rule Accomplish?

On March 13, 2000, DEA published a final rule (65 FR 13235) implementing the provisions of Pub. L. 106–172 ''The Samantha Reid and Hillory J. Farias Date-Rape Prevention Act of 1999'', placing gamma-hydroxybutyric acid (GHB) and its salts, isomers, and salts of isomers into Schedule I of the Controlled Substances Act (CSA).

The final rule noted that, pursuant to 21 CFR Part 1301, any person who manufactures, distributes, dispenses, imports or exports GHB or who engages in research or conducts instructional activities with GHB, or who proposes to engage in such activities, must submit an application for Schedule I registration by May 12, 2000. This was the first scheduling action involving GHB, and DEA recognized that persons distributing GHB for legitimate purposes would need time to comply with the new regulations.

Why Is DEA Providing an Extension of the Application of the Order Form Requirement and to Whom Does This Extension Apply?

At the same time, DEA required that persons wishing to distribute GHB for any of the above listed purposes must conduct all transactions using DEA Form 222, U.S. Official Order Forms for Schedule I and II Controlled Substances, as required by 21 CFR 1305.03. Given the DEA does not provide order forms until registration is approved, it would not be possible for applicants to comply with the order form requirements of the final rule while their application for registration is pending. Therefore, DEA is providing and extension in the application of the order form requirement for GHB for persons submitting a registration application by May 12, 2000. Persons who have submitted a registration application by May 12, 2000 may continue to handle and conduct transactions involving GHB. These persons must keep records regarding each transaction containing information required on the order form. Distributions of GHB may occur without the order form while applications for registration are pending. However, once registration is approved, and order forms have been received, these registrants must complete order forms for the transactions which have been conducted and must distribute the order forms according to the requirements of the regulations.

To Whom Does This Extension Not Apply?

The extension of the application of the order form requirement for GHB does not apply to persons submitting an application for registration after May 12, 2000. Persons submitting an application for registration after May 12, 2000 may not handle or conduct transactions involving GHB until registration has been granted by the Administration.

Regulatory Certifications

Regulatory Flexibility Act

The Deputy Assistant Administrator hereby certifies that this rulemaking has been drafted in a manner consistent with the principles of the Regulatory Flexibility Act (5 U.S.C. 601 *et seq.*). It will not have a significant financial impact on a substantial number of small business entities. This supplementary statement to the final rule provides an extension of the application of the order form requirement for GHB, permitting persons to distribute GHB without using an official order form until those persons have been registered by the Administration.

Executive Order 12866

The Deputy Assistant Administrator further certifies that this rulemaking has been drafted in accordance with the principles in Executive Order 12866 Section 1(b). DEA has determined that this is not a significant rulemaking action. This supplementary statement to the final rule permits distributions of GHB to occur without the use of order forms until persons are registered with the Administration. Therefore, this action has not been reviewed by the Office of Management and Budget.

Executive Order 13132

This action has been analyzed in accordance with the principles and criteria in Executive Order 13132, and it has been determined that this rule does not have sufficient federalism implications to warrant the preparation of a Federalism Assessment.

Unfunded Mandates Reform Act of 1995

This rule will not result in the expenditure by State, local, and tribal governments, in the aggregate, or by the private sector, of $100,000,000 or more in any one year, and will not significantly or uniquely affect small governments. Therefore, no actions were deemed necessary under the provision of the Unfunded Mandates Reform Act of 1995. Small Business Regulatory Enforcement Fairness Act of 1996.

This rule is not a major rule as defined by Section 804 of the Small Business Regulatory Enforcement Fairness Act of 1996. This rule will not result in an annual effect on the economy of $100,000,000 or more; a major increase in costs or prices; or significant adverse effects on competition, employment, investment, productivity, innovation, or on the ability of United States-based companies to compete with foreign-based companies in domestic and export markets.

Plain Language Instructions

The Drug Enforcement Administration makes every effort to write clearly. If you have suggestions as to how to improve the clarity of this regulation, call or write Patricia M. Good, Chief, Liaison and Policy Section, Office of Diversion Control, Drug Enforcement Administration, Washington, DC 20537, telephone (202) 307–7297.

Dated: May 5, 2000.

John H. King,

Deputy Assistant Administrator, Office of Diversion Control.

[FR Doc. 00–11884 Filed 5–11–00; 8:45 am]

BILLING CODE 4410–09–M

PRESIDENTIAL COMMISSION ON THE ASSIGNMENT OF WOMEN IN THE ARMED FORCES

32 CFR Chapter XXIX

Removal of CFR Chapter

Since the Presidential Commission on the Assignment of Women in the Armed Forces is legally terminated and its regulations are no longer in force and effect, the Office of the Federal Register is removing 32 CFR Chapter XXIX from

the Code of Federal Regulations, in compliance with the provisions in 1 CFR 8.2.

Accordingly, 32 CFR is amended by removing part 2900 and vacating chapter XXIX.

[FR Doc. 00–55506 Filed 5–11–00; 8:45 am]

BILLING CODE 1505–01–D

ENVIRONMENTAL PROTECTION AGENCY

40 CFR Part 180

[OPP–300767A; FRL–6558–5]

Rin 2070–Ab78

Dicamba, Pesticide Tolerances; Technical Amendment

AGENCY: Environmental Protection Agency (EPA).

ACTION: Final rule; technical amendment.

SUMMARY: EPA published in the **Federal Register** of January 6, 1999, a document establishing tolerances for residues of dicamba in/on various raw agricultural commodities. BASF Corporation requested the tolerances under the Federal Food, Drug and Cosmetic Act (FFDCA), as amended by the Food Quality Protection Act of 1996 (FQPA) (Public Law 104–170). The regulation was amended to include a new metabolite and new commodities, as described in the Final Rule. Tolerances for soybean, forage, and hay were inadvertently omitted from § 180.227(a)(3). This technical amendment corrects this error by listing these commodities in the existing regulation.

DATES: This technical amendment is effective May 12, 2000. Objections and requests for hearings, identified by docket control number OPP–300767A, must be received by EPA on or before July 11, 2000.

ADDRESSES: Written objections and hearing requests may be submitted by mail, in person, or by courier. Please follow the detailed instructions for each method as provided in Unit III. of the **SUPPLEMENTARY INFORMATION.** To ensure proper receipt by EPA, your objections and hearing requests must identify docket control number OPP–300767A in the subject line on the first page of your response.

FOR FURTHER INFORMATION CONTACT: By mail: Joanne Miller, Registration Division (7505C), Office of Pesticide Programs, Environmental Protection Agency, 401 M St., SW., Washington, DC 20460. Office location, telephone number, and e-mail address: Crystal Mall #2, 1921 Jefferson Davis Hwy., Arlington, VA, (703) 308–9356; e-mail: miller.joanne@epamail.epa.gov.

SUPPLEMENTARY INFORMATION:

I. General Information

A. Does this Action Apply to Me?

You may be affected by this action if you are an agricultural producer, food manufacturer, or pesticide manufacturer. Potentially affected categories and entities may include, but are not limited to:

Categories	NAICS	Examples of potentially affected entities
Industry	111 112 311 32532	Crop production. Animal production. Food manufacturing. Pesticide manufacturing.

This listing is not intended to be exhaustive, but rather provides a guide for readers regarding entities likely to be affected by this action. Other types of entities not listed in the table could also be affected. The North American Industrial Classification System (NAICS) codes have been provided to assist you and others in determining whether or not this action might apply to certain entities. If you have questions regarding the applicability of this action to a particular entity, consult the person listed under **FOR FURTHER INFORMATION CONTACT.**

B. How Can I Get Additional Information, Including Copies of this Document and Other Related Documents?

1. *Electronically.*You may obtain electronic copies of this document, and certain other related documents that might be available electronically, from the EPA Internet Home Page at http://www.epa.gov/. To access this document, on the Home Page select ''Laws and Regulations'' and then look up the entry for this document under the ''Federal Register—Environmental Documents.'' You can also go directly to the Federal Register listings at http://www.epa.gov/fedrgstr/.

2. *In person.* The Agency has established an official record for this action under docket control number OPP–300767A. The official record consists of the documents specifically referenced in this action, and other information related to this action, including any information claimed as Confidential Business Information (CBI). This official record includes the documents that are physically located in the docket, as well as the documents that are referenced in those documents. The public version of the official record does not include any information claimed as CBI. The public version of the official record, which includes printed, paper versions of any electronic comments submitted during an applicable comment period is available for inspection in the Public Information and Records Integrity Branch (PIRIB), Rm. 119, Crystal Mall #2, 1921 Jefferson Davis Hwy., Arlington, VA, from 8:30 a.m. to 4 p.m., Monday through Friday, excluding legal holidays. The PIRIB telephone number is (703) 305–5805.

II. Background

EPA published a document on January 6, 1999 (64 FR 759) (FRL–6049–2), establishing, revising, and revoking tolerances for residues of dicamba in/on various raw agricultural commodities. This regulation established maximum permissible levels for residues of dicamba in/on food commodities pursuant to section 408(b)(2)(D) of the Federal Food, Drug, and Cosmetic Act, as amended by the Food Quality Protection Act of 1996. Specifically, EPA amended § 180.227 by redesignating then existing paragraphs (b) and (c) as paragraphs (a)(2) and (a)(3), respectively. EPA further amended § 180.227 by revising newly designated paragraph (a)(2). In the revision of § 180.227(a)(2), EPA left out the tolerances for soybean, forage and soybean, hay with the intention of including those tolerances in newly designated paragraph (a)(3). However, entries for soybean, forage and soybean, hay were inadvertently omitted from the table in paragraph (a)(3). This technical amendment corrects that oversight. The tolerance levels for soybean, forage and soybean, hay were listed correctly throughout the document. The correct tolerance levels, 0.01 ppm in/on soybean forage and hay, will be restored by this technical amendment. The tolerances were not revoked and have been enforceable during the lapse of time they did not appear in the regulation.

III. Objections and Hearing Requests

Under section 408(g) of the FFDCA, as amended by the FQPA, any person may file an objection to any aspect of this regulation and may also request a hearing on those objections. The EPA procedural regulations which govern the submission of objections and requests for hearings appear in 40 CFR part 178. Although the procedures in those regulations require some modification to reflect the amendments made to the FFDCA by the FQPA of 1996, EPA will

continue to use those procedures, with appropriate adjustments, until the necessary modifications can be made. The new section 408(g) provides essentially the same process for persons to ''object'' to a regulation for an exemption from the requirement of a tolerance issued by EPA under new section 408(d), as was provided in the old FFDCA sections 408 and 409. However, the period for filing objections is now 60 days, rather than 30 days.

A. What Do I Need to Do to File an Objection or Request a Hearing?

You must file your objection or request a hearing on this regulation in accordance with the instructions provided in this unit and in 40 CFR part 178. To ensure proper receipt by EPA, you must identify docket control number OPP–300767A in the subject line on the first page of your submission. All requests must be in writing, and must be mailed or delivered to the Hearing Clerk on or before July 11, 2000.

1. *Filing the request.* Your objection must specify the specific provisions in the regulation that you object to, and the grounds for the objections (40 CFR 178.25). If a hearing is requested, the objections must include a statement of the factual issues(s) on which a hearing is requested, the requestor's contentions on such issues, and a summary of any evidence relied upon by the objector (40 CFR 178.27). Information submitted in connection with an objection or hearing request may be claimed confidential by marking any part or all of that information as CBI. Information so marked will not be disclosed except in accordance with procedures set forth in 40 CFR part 2. A copy of the information that does not contain CBI must be submitted for inclusion in the public record. Information not marked confidential may be disclosed publicly by EPA without prior notice.

Mail your written request to: Office of the Hearing Clerk (1900), Environmental Protection Agency, Ariel Rios Bldg., 1200 Pennsylvania Ave., NW., Washington, DC 20460. You may also deliver your request to the Office of the Hearing Clerk in Rm. C400, Waterside Mall, 401 M St., SW., Washington, DC 20460. The Office of the Hearing Clerk is open from 8 a.m. to 4 p.m., Monday through Friday, excluding legal holidays. The telephone number for the Office of the Hearing Clerk is (202) 260–4865.

2. *Tolerance fee payment.* If you file an objection or request a hearing, you must also pay the fee prescribed by 40 CFR 180.33(i) or request a waiver of that fee pursuant to 40 CFR 180.33(m). You must mail the fee to: EPA Headquarters Accounting Operations Branch, Office of Pesticide Programs, P.O. Box 360277M, Pittsburgh, PA 15251. Please identify the fee submission by labeling it ''Tolerance Petition Fees.''

EPA is authorized to waive any fee requirement ''when in the judgement of the Administrator such a waiver or refund is equitable and not contrary to the purpose of this subsection.'' For additional information regarding the waiver of these fees, you may contact James Tompkins by phone at (703) 305–5697, by e-mail at tompkins.jim@epa.gov, or by mailing a request for information to Mr. Tompkins at Registration Division (7505C), Office of Pesticide Programs, Environmental Protection Agency, Ariel Rios Bldg., 1200 Pennsylvania Ave., NW., Washington, DC 20460.

If you would like to request a waiver of the tolerance objection fees, you must mail your request for such a waiver to: James Hollins, Information Resources and Services Division (7502C), Office of Pesticide Programs, Environmental Protection Agency, Ariel Rios Bldg., 1200 Pennsylvania Ave., NW., Washington, DC 20460.

3. *Copies for the Docket.* In addition to filing an objection or hearing request with the Hearing Clerk as described in Unit III.A., you should also send a copy of your request to the PIRIB for its inclusion in the official record that is described in Unit I.B.2. Mail your copies, identified by docket control number OPP–300767A, to: Public Information and Records Integrity Branch, Information Resources and Services Division (7502C), Office of Pesticide Programs, Environmental Protection Agency, Ariel Rios Bldg., 1200 Pennsylvania Ave., NW., Washington, DC 20460. In person or by courier, bring a copy to the location of the PIRIB described in Unit I.B.2. You may also send an electronic copy of your request via e-mail to: opp-docket@epa.gov. Please use an ASCII file format and avoid the use of special characters and any form of encryption. Copies of electronic objections and hearing requests will also be accepted on disks in WordPerfect 6.1/8.0 file format or ASCII file format. Do not include any CBI in your electronic copy. You may also submit an electronic copy of your request at many Federal Depository Libraries.

B. When Will the Agency Grant a Request for a Hearing?

A request for a hearing will be granted if the Administrator determines that the material submitted shows the following: There is a genuine and substantial issue of fact; there is a reasonable possibility that available evidence identified by the requestor would, if established resolve one or more of such issues in favor of the requestor, taking into account uncontested claims or facts to the contrary; and resolution of the factual issues(s) in the manner sought by the requestor would be adequate to justify the action requested (40 CFR 178.32).

IV. Regulatory Assessment Requirements

This final rule does not impose any new requirements. It only implements a technical amendment to the Code of Federal Regulations (CFR). As such, this action does not require review by the Office of Management and Budget (OMB) under Executive Order 12866, entitled *Regulatory Planning and Review* (58 FR 51735, October 4, 1993), the Paperwork Reduction Act (PRA), 44 U.S.C. 3501 et seq., or Executive Order 13045, entitled *Protection of Children from Environmental Health Risks and Safety Risks* (62 FR 19885, April 23, 1997). This action does not impose any enforceable duty, contain any unfunded mandate, or impose any significant or unique impact on small governments as described in the Unfunded Mandates Reform Act of 1995 (UMRA) (Public Law 104–4). Nor does it require prior consultation with State, local, and tribal government officials as specified by Executive Order 12875, entitled ''Federal Register Enhancing the Intergovernmental Partnership'' (58 FR 58093, October 28, 1993) and Executive Order 13084, entitled ''Consultation and Coordination with Indian Tribal Governments'' 63 FR 27655, May 19, 1998), or special consideration of environmental justice related issues under Executive Order 12898, entitled *Federal Actions to Address Environmental Justice in Minority Populations and Low-Income Populations* (59 FR 7629, February 16, 1994). This action does not involve any technical standards that would require Agency consideration of voluntary consensus standards pursuant to section 12(d) of the National Technology Transfer and Advancement Act of 1995 (NTTAA), Public Law 104–113, section 12(d) (15 U.S.C. 272 note). In addition, since this action is not subject to notice and comment requirements under the Administrative Procedure Act (APA) or any other statute, it is not subject to the regulatory flexibility provisions of the Regulatory Flexibility Act (RFA) (5 U.S.C. 601 et seq.).

V. Submission to Congress and the Comptroller General

The Congressional Review Act, 5 U.S.C. 801 *et seq.,* as added by the Small Business Regulatory Enforcement Fairness Act of 1996, generally provides that before a rule may take effect, the Agency promulgating the rule must submit a rule report, which includes a copy of the rule, to each House of the Congress and to the Comptroller General of the United States. EPA will submit a report containing this rule and other required information to the U.S. Senate, the U.S. House of Representatives, and the Comptroller General of the United States prior to publication of this rule in the **Federal Register**. This is a technical correction to the **Federal Register** and is not a ''major rule'' as defined by 5 U.S.C. 804(2).

List of Subjects in 40 CFR Part 180

Environmental protection, Administrative practice and procedure, Agricultural commodities, Pesticides and pests, Reporting and recordkeeping requirements.

Dated: May 4, 2000.

James Jones,

Director, Registration Division, Office of Pesticide Programs.

Therefore, 40 CFR part 180 is amended as follows:

1. The authority citation for part 180 continues to read as follows:

Authority: 21 U.S.C. 321(q), 346(a), and 374.

2. In § 180.227, the table to paragraph (a)(3) is amended by adding alphabetically entries for the commodities ''soybean, forage'' and ''soybean, hay'', to read as follows:

§ 180.227 Dicamba; tolerances for residues.

(a) * * *

(3) * * *

Commodity	Parts per million
* * * *	*
Soybean, forage	0.01
Soybean, hay	0.01
* * * *	*

* * * * *

[FR Doc. 00–11872 Filed 5–11–00; 8:45 am]

BILLING CODE 6560–50–F

ENVIRONMENTAL PROTECTION AGENCY

40 CFR Part 228

Criteria for the Management of Disposal Sites for Ocean Dumping

CFR Correction

In Title 40 of the Code of Federal Regulations, parts 190–259, revised as of July 1, 1999, page 229, § 228.15 is corrected in paragraph (j)(11)(i) by removing ''93°′dprime;W.'' and adding in its place ''93°49′23″W.''.

[FR Doc. 00–55507 Filed 5–11–00; 8:45 am]

BILLING CODE 1505–01–D

FEDERAL EMERGENCY MANAGEMENT AGENCY

44 CFR Part 64

[Docket No. FEMA–7735]

Suspension of Community Eligibility

AGENCY: Federal Emergency Management Agency, FEMA.

ACTION: Final rule.

SUMMARY: This rule identifies communities, where the sale of flood insurance has been authorized under the National Flood Insurance Program (NFIP), that are suspended on the effective dates listed within this rule because of noncompliance with the floodplain management requirements of the program. If the Federal Emergency Management Agency (FEMA) receives documentation that the community has adopted the required floodplain management measures prior to the effective suspension date given in this rule, the suspension will be withdrawn by publication in the **Federal Register**.

EFFECTIVE DATES: The effective date of each community's suspension is the third date (''Susp.'') listed in the third column of the following tables.

ADDRESSES: If you wish to determine whether a particular community was suspended on the suspension date, contact the appropriate FEMA Regional Office or the NFIP servicing contractor.

FOR FURTHER INFORMATION CONTACT: Donna M. Dannels, Branch Chief, Policy, Assessment and Outreach Division, Mitigation Directorate, 500 C Street, S.W., Room 411, Washington, D.C. 20472, (202) 646–3098.

SUPPLEMENTARY INFORMATION: The NFIP enables property owners to purchase flood insurance which is generally not otherwise available. In return, communities agree to adopt and administer local floodplain management aimed at protecting lives and new construction from future flooding. Section 1315 of the National Flood Insurance Act of 1968, as amended, 42 U.S.C. 4022, prohibits flood insurance coverage as authorized under the National Flood Insurance Program, 42 U.S.C. 4001 et seq., unless an appropriate public body adopts adequate floodplain management measures with effective enforcement measures. The communities listed in this document no longer meet that statutory requirement for compliance with program regulations, 44 CFR part 59 et seq. Accordingly, the communities will be suspended on the effective date in the third column. As of that date, flood insurance will no longer be available in the community. However, some of these communities may adopt and submit the required documentation of legally enforceable floodplain management measures after this rule is published but prior to the actual suspension date. These communities will not be suspended and will continue their eligibility for the sale of insurance. A notice withdrawing the suspension of the communities will be published in the **Federal Register**.

In addition, the Federal Emergency Management Agency has identified the special flood hazard areas in these communities by publishing a Flood Insurance Rate Map (FIRM). The date of the FIRM if one has been published, is indicated in the fourth column of the table. No direct Federal financial assistance (except assistance pursuant to the Robert T. Stafford Disaster Relief and Emergency Assistance Act not in connection with a flood) may legally be provided for construction or acquisition of buildings in the identified special flood hazard area of communities not participating in the NFIP and identified for more than a year, on the Federal Emergency Management Agency's initial flood insurance map of the community as having flood-prone areas (section 202(a) of the Flood Disaster Protection Act of 1973, 42 U.S.C. 4106(a), as amended). This prohibition against certain types of Federal assistance becomes effective for the communities listed on the date shown in the last column. The Associate Director finds that notice and public comment under 5 U.S.C. 553(b) are impracticable and unnecessary because communities listed in this final rule have been adequately notified.

Each community receives a 6-month, 90-day, and 30-day notification addressed to the Chief Executive Officer that the community will be suspended unless the required floodplain management measures are met prior to

the effective suspension date. Since these notifications have been made, this final rule may take effect within less than 30 days.

National Environmental Policy Act

This rule is categorically excluded from the requirements of 44 CFR Part 10, Environmental Considerations. No environmental impact assessment has been prepared.

Regulatory Flexibility Act

The Associate Director has determined that this rule is exempt from the requirements of the Regulatory Flexibility Act because the National Flood Insurance Act of 1968, as amended, 42 U.S.C. 4022, prohibits flood insurance coverage unless an appropriate public body adopts adequate floodplain management measures with effective enforcement measures. The communities listed no longer comply with the statutory requirements, and after the effective date, flood insurance will no longer be available in the communities unless they take remedial action.

Regulatory Classification

This final rule is not a significant regulatory action under the criteria of section 3(f) of Executive Order 12866 of September 30, 1993, Regulatory Planning and Review, 58 FR 51735.

Paperwork Reduction Act

This rule does not involve any collection of information for purposes of the Paperwork Reduction Act, 44 U.S.C. 3501 *et seq.*

Executive Order 12612, Federalism

This rule involves no policies that have federalism implications under Executive Order 12612, Federalism, October 26, 1987, 3 CFR, 1987 Comp., p. 252.

Executive Order 12778, Civil Justice Reform

This rule meets the applicable standards of section 2(b)(2) of Executive Order 12778, October 25, 1991, 56 FR 55195, 3 CFR, 1991 Comp., p. 309.

List of Subjects in 44 CFR Part 64

Flood insurance, Floodplains.

Accordingly, 44 CFR part 64 is amended as follows:

PART 64—[AMENDED]

1. The authority citation for part 64 continues to read as follows:

Authority: 42 U.S.C. 4001 et seq.; Reorganization Plan No. 3 of 1978, 3 CFR, 1978 Comp., p. 329; E.O. 12127, 44 FR 19367, 3 CFR, 1979 Comp., p. 376.

§ 64.6 [Amended]

2. The tables published under the authority of § 64.6 are amended as follows:

64.6—LIST OF ELIGIBLE COMMUNITIES

State and location	Community No.	Effective date authorization/cancellation of sale of flood insurance in community	Current effective map date	Date certain Federal assistance no longer available in special flood hazard areas
Region I				
New Hampshire: Brentwood, town of, Rockingham County.	330125	June 10, 1975, Emerg.; April 15, 1981; Reg. May 4, 2000	05–04–00	05–04–00
Charlestown: town of, Sullivan County.	330153	November 3, 1975, Emerg.; April 15, 1981; Reg. May 4, 2000	05–04–00	05–04–00
Walpole, town of, Cheshire County.	330027	June 9, 1975, Emerg.; April 15, 1981; Reg. May 4, 2000	05–04–00	05–04–00
Region II				
New York: Cooperstown, village of, Otsego County.	360665	May 28, 1975, Emerg.; February 1, 1988, Reg. May 4, 2000	05–04–00	05–04–00
Greenwich, village of, Washington County.	360887	April 2, 1975, Emerg.; April 17, 1985, Reg. May 4, 2000	05–04–00	05–04–00
New Bremen, town of, Lewis County.	360373	January 2, 1976, Emerg.; June 19, 1985, Reg. May 4, 2000 ..	05–04–00	05–04–00
New York Mills, village of, Oneida County.	360537	May 23, 1975, Emerg.; May 16, 1983, Reg. May 4, 2000	05–04–00	05–04–00
Whitesboro, village of, Oneida County.	360566	March 15, 1974, Emerg.; February 1, 1978, Reg. May 4, 2000.	05–04–00	05–04–00
Whitestown, town of, Oneida County.	360567	May 13, 1975, Emerg.; September 15, 1983, Reg. May 4, 2000.	05–04–00	05–04–00
Yorkville, village of, Oneida County.	360568	September 19, 1974, Emerg.; June 1, 1983, Reg. May 4, 2000.	05–04–00	05–04–00
Region III				
West Virginia: Grant County, unincorporated areas.	540038	October 22, 1975, Emerg.; August 1, 1987, Reg. May 4, 2000	05–04–00	05–04–00
Petersburg, city of, Grant County.	540039	April 18, 1975, Emerg.; June 18, 1987, Reg. May 4, 2000	05–04–00	05–04–00
Region IV				
North Carolina: Spring Lake, town of, Cumberland County.	370484	February 14, 1997, Reg.; May 4, 2000, Susp	05–04–00	05–04–00
Region V				
Minnesota: Elk River, city of, Sherburne County.	270436	February 19, 1974, Emerg.; May 2, 1977, Susp. May 4, 2000	05–04–00	05–04–00
Sherburne County, unincorporated areas.	270435	May 16, 1974, Emerg.; May 19, 1981, Susp. May 4, 2000	05–04–00	05–04–00
Region X				
Washington: Aberdeen, city of, Grays Harbor County.	530058	May 9, 1974, Emerg.; July 16, 1984, Susp. May 4, 2000	05–04–00	05–04–00

64.6—LIST OF ELIGIBLE COMMUNITIES—Continued

State and location	Community No.	Effective date authorization/cancellation of sale of flood insurance in community	Current effective map date	Date certain Federal assistance no longer available in special flood hazard areas
Region II				
New York: Clarkstown, town of, Rockland County.	360679	October 24, 1974, Emerg.; March 2, 1983, Susp. May 18, 2000.	05–18–00	05–18–00
Painted Post, village of, Steuben County.	360779	February 23, 1973, Emerg.; September 30, 1977, Susp. May 18, 2000.	05–18–00	05–18–00
Region III				
West Virginia: Logan County, unincorporated areas.	545536	January 29, 1971, Emerg.; April 7, 1972, Susp. May 18, 2000	05–18–00	05–18–00
Morgan County, unincorporated areas.	540144	October 28, 1975, Emerg.; July 1, 1987, Susp. May 18, 2000	05–18–00	05–18–00
Region V				
Wisconsin: Crawford County, unincorporated areas.	555551	March 19, 1971, Emerg.; April 20, 1973, Susp. May 18, 2000	05–18–00	05–18–00

Code for reading third column: Emerg.-Emergency; Reg.-Regular; Susp.-Suspension.

Dated: April 28, 2000.

Michael J. Armstrong,

Associate Director for Mitigation.

[FR Doc. 00–11988 Filed 5–11–00; 8:45 am]

BILLING CODE 6718–05–P

FEDERAL COMMUNICATIONS COMMISSION

47 CFR Part 73

[DA 00–944; MM Docket No. 96–242; RM–8940, RM–9243]

Radio Broadcasting Services; Cheyenne, WY, Grover, CO.

AGENCY: Federal Communications Commission.

ACTION: Final rule.

SUMMARY: The Commission, at the request of Montgomery Broadcasting Limited Liability Company, allots Channel 229A to Cheyenne, Wyoming, and dismisses the counterproposal for Channel 229C2 at Grover, Colorado, filed by Magic City Media at its request. *See* 61 FR 65509 (December 13, 1996). Channel 229A can be allotted to Cheyenne in compliance with the Commission's minimum distance separation requirements, with respect to domestic allotments, with a site restriction of 9.7 kilometers (6.0 miles), at coordinates 41–12–39 and 104–44–54. A filing window will not be opened at this time. Instead, the issue of opening a filing window for this channel will be addressed by the Commission in a subsequent order.

DATES: Effective June 12, 2000.

FOR FURTHER INFORMATION CONTACT: Victoria McCauley Mass Media Bureau, (202) 418–2180.

SUPPLEMENTARY INFORMATION: This is a synopsis of the Commission's Report and Order, MM Docket No. 96–242, adopted April 19, 2000, and released April 28, 2000. The full text of this Commission decision is available for inspection and copying during normal business hours in the FCC Reference Center (Room 239), 445 12th Street, SW, Washington, DC. The complete text of this decision may also be purchased from the Commission's copy contractor, International Transcription Services, Inc., (202) 857–3800, 1231 20th Street, NW, Washington, DC 20036.

List of Subjects in 47 CFR Part 73

Radio broadcasting.

Part 73 of Title 47 of the Code of Federal Regulations is amended as follows:

PART 73—[AMENDED]

1. The authority citation for Part 73 continues to read as follows:

Authority: 47 U.S.C. 154, 303, 334, 336.

§ 73.202 [Amended]

2. Section 73.202(b), the Table of FM Allotments under Wyoming, is amended by adding Channel 229A at Cheyenne.

Federal Communications Commission.

John A. Karousos,

Chief, Allocations Branch, Policy and Rules Division, Mass Media Bureau.

[FR Doc. 00–11913 Filed 5–11–00; 8:45 am]

BILLING CODE 6712–01–P

DEPARTMENT OF COMMERCE

National Oceanic and Atmospheric Administration

50 CFR Part 622

[I.D. 050500G]

Fisheries of the Caribbean, Gulf of Mexico, and South Atlantic; Shrimp Fishery of the Gulf of Mexico; Texas Closure

AGENCY: National Marine Fisheries Service (NMFS), National Oceanic and Atmospheric Administration (NOAA), Commerce.

ACTION: Adjustment of the beginning date of the Texas closure.

SUMMARY: NMFS announces an adjustment to the start of the annual closure of the shrimp fishery in the exclusive economic zone (EEZ) off Texas. The closure is normally from May 15 to July 15 each year. For 2000, the closure will begin on May 11. The Texas closure is intended to prohibit the harvest of brown shrimp during the major period of emigration from Texas estuaries to the Gulf of Mexico so the shrimp may reach a larger, more valuable size and to prevent the waste of brown shrimp that would be discarded in fishing operations because of their small size.

DATES: The EEZ off Texas is closed to trawl fishing, except for trawling for royal red shrimp beyond the 100-fathom (183 meter) depth contour, from 30 minutes after sunset, May 11, 2000, to 30 minutes after sunset, July 15, 2000, unless the latter date is changed through notification in the **Federal Register**.

FOR FURTHER INFORMATION CONTACT: Steve Branstetter, 813-570-5305.

SUPPLEMENTARY INFORMATION: The Gulf of Mexico shrimp fishery is managed under the Fishery Management Plan for the Shrimp Fishery of the Gulf of Mexico (FMP). The FMP was prepared by the Gulf of Mexico Fishery Management Council and is implemented by regulations at 50 CFR part 622 under the authority of the Magnuson-Stevens Fishery Conservation and Management Act. Implementing regulations at 50 CFR 622.34 describe the Texas closure and provide for adjustments to the beginning and ending dates by the Regional Administrator, Southeast Region, NMFS, under specified criteria.

The beginning and ending dates of the Texas closure are based on biological sampling by Texas Parks and Wildlife Department (TPWD). This sampling is used to project when brown shrimp in Texas bays and estuaries will reach a mean size of 90 mm, and begin strong emigrations out of the bays and estuaries during maximum duration ebb tides. Sampling during the spring of 2000 indicates that brown shrimp will be leaving the Texas estuaries earlier than normal. Thus, to provide adequate protection of small brown shrimp emigrating from the Texas estuaries, NMFS has determined that an adjustment to the closure date is necessary. During the closure, the EEZ off Texas is closed to all trawl fishing, except for vessels trawling for royal red shrimp beyond the 100-fathom (183-m) depth contour. State waters off Texas will also be closed commencing at 30 minutes after sunset on May 11, 2000.

The termination date of the Texas closure is based on continued sampling by TPWD to develop projections of when brown shrimp will reach a mean size of 112 mm, and when maximum duration ebb tides will occur. If there is a need to adjust the July 15 date for the termination of the closure, notification of the revised termination date will be published in the **Federal Register**.

Classification

This action is authorized by 50 CFR 622.26(b) and is exempt from review under Executive Order 12866.

Authority: 16 U.S.C. 1801 *et seq.*

Dated: May 8, 2000.

Bruce C. Morehead,

Acting Director, Office of Sustainable Fisheries, National Marine Fisheries Service.

[FR Doc. 00–12032 Filed 5–11–00; 8:45 am]

BILLING CODE 3510–22–F

DEPARTMENT OF COMMERCE

National Oceanic and Atmospheric Administration

50 CFR Part 648

[Docket No. 000407096–0096–01; 040300C]

Fisheries of the Northeastern United States; Northeast Multispecies Fishery; Framework Adjustment 33 to the Northeast Multispecies Fishery Management Plan; Correction

AGENCY: National Marine Fisheries Service (NMFS), National Oceanic and Atmospheric Administration (NOAA), Commerce.

ACTION: Final rule; correction.

SUMMARY: On April 24, 2000, NMFS published a final rule implementing Framework Adjustment 33 to the Northeast Multispecies Fishery Management Plan. The final rule implementing Framework Adjustment 33 contained errors. The effective date of the increase in the haddock landing limit specified in § 648.86(a)(1)(i) and (ii), and the paragraph numbering of the new paragraph (e) in § 648.89, Recreational and charter/party restrictions, are corrected in this document. In addition, the amendatory instruction for the revision to § 648.23 indicated that paragraph (b)(4) would be revised rather than only the introductory text to paragraph (b)(4). Also, three metric conversions (pounds to kilograms) for haddock contained in the preamble are incorrect. This document corrects these errors.

DATES: Sections 648.23(b)(4) introductory text, and 648.86(a)(1)(i) and (ii) are effective May 1, 2000. Section 648.89(e) contains information collection requirements and is not effective until approved by the Office of Management and Budget (OMB). When OMB approval is received, NMFS will announce the effective date of § 648.89(e) in the **Federal Register**.

FOR FURTHER INFORMATION CONTACT: Richard A. Pearson, Fishery Policy Analyst, 978–281–9279.

SUPPLEMENTARY INFORMATION: In the final rule published April 24, 2000, at 65 FR 21658, the preamble indicated that the haddock daily landing limit during the May 1–September 30 period was increased to 3,000 lb/DAS (1,360.8 kg/DAS), or part of a DAS, with a maximum possession limit of 30,000 lb (13,608 kg) per trip. The preamble also indicated that the daily landing limit will increase on October 1, 2000, to 5,000 lb/DAS (2,268 kg/DAS), with a maximum possession limit of 50,000 lb (22,680 kg) per trip. However, § 648.86(a)(1)(i) of the final rule inadvertently indicated that the 3,000 lb/DAS (1,360.8 kg/DAS) landing limit would be in effect through August 31, rather than September 30, and that the increase in the landing limit reflected in § 648.86(a)(1)(ii) would occur on September 1, 2000, rather than on October 1, 2000. This document corrects the effective date of the haddock increase contained in § 648.86(a)(1)(i) and (ii) to be consistent with the preamble language. In addition, in the paragraph entitled ''Haddock Measures'' and in the haddock discussion contained in the Classification section three of the metric conversions for haddock are incorrect. This document corrects those errors.

In § 648.23, amendatory instruction 4 indicated that paragraph (b)(4) was revised. However, the intent was to revise only the introductory text of § 648.23(b)(4). This document corrects the amendatory instruction.

Also, we added a new paragraph (e) to § 648.89. However, the subparagraphs of new paragraph (e)(3) were incorrectly designated. This document corrects that error.

1. On page 21661, in the first column under ''Haddock Measures'', in the first sentence, in the eighth line of this paragraph, remove ''period to 3,000 lb/DAS (1,360.7 kg/'' and add, in its place, ''period to 3,000 lb/DAS (1,360.8 kg/''.

2. On page 21663, in the third column, first full paragraph, in the fourth sentence, in the 24th through 26th lines, remove ''limit to 3,000 lbs/DAS (2,268 kg/DAS), with a maximum possession limit of 30,000 lb (13,680 kg) per trip.'' and add, in its place, ''limit to 3,000 lb/DAS (1,360.8 kg/DAS), with a maximum possession limit of 30,000 lb (13,608 kg) per trip.''

§ 648.23 [Corrected]

3. On page 21665, in column one, amendatory instruction no. 4 is corrected to read as follows:

''4. In § 648.23, paragraph (b)(4) introductory text is revised to read as follows:''

§ 648.86 [Corrected]

4. On page 21666, in § 648.86(a)(1)(i), in the first sentence, remove ''August 31,'' and add, in its place, ''September 30,''.

5. On page 21666, in § 648.86(a)(1)(ii), in the first sentence, remove ''September 1'' and add, in its place, ''October 1''.

§ 648.89 [Corrected]

6. On page 21667, in § 648.89(e)(3), in the second and third columns, the

paragraphs designated as (A), (B), and (C), and (D) are correctly designated as (i), (ii), (iii), and (iv).

Dated: May 8, 2000.

Penelope D. Dalton,

Assistant Administrator for Fisheries, National Marine Fisheries Service.

[FR Doc. 00–12030 Filed 5–11–00; 8:45 am]

BILLING CODE 3510–22–F

DEPARTMENT OF COMMERCE

National Oceanic and Atmospheric Administration

50 CFR Part 679

[Docket No. 970703166–8209–04; I.D. 060997A]

RIN 0648–AH65

Fisheries of the Exclusive Zone Economic Zone Off Alaska; License Limitation Program; Correction

AGENCY: National Marine Fisheries Service (NMFS), National Oceanic and Atmospheric Administration (NOAA), Commerce.

ACTION: Correcting amendments.

SUMMARY: NMFS is correcting a final rule implementing the License Limitation Program (LLP) established for the groundfish fisheries in the Bering Sea and Aleutian Islands area (BSAI), the groundfish fisheries in the Gulf of Alaska (GOA), and the crab fisheries in the BSAI, which was published in the **Federal Register** of Thursday, October 1, 1998.

DATES: Effective January 1, 1999.

FOR FURTHER INFORMATION CONTACT: Jay Ginter, 907–586–7228.

SUPPLEMENTARY INFORMATION:

Background

The LLP is a limited access system authorized under section 303(d) of the Magnuson-Stevens Fishery Conservation and Management Act. The LLP is designed to limit the number, size and operation of vessels that may be used in the affected groundfish and crab fisheries. The North Pacific Fishery Management Council (Council) adopted the LLP in June 1995. The Council officially submitted the LLP to NMFS in June 1997. A proposed rule to implement the LLP was published on August 15, 1997 (62 FR 43865). The LLP was approved by NMFS on September 12, 1997. A final rule to implement the LLP was published on October 1, 1998 (63 FR 52642). Additional rules to implement an application process and a transfer process for LLP licenses were proposed on April 19, 1999 (64 FR 19113) and published as final on August 6, 1999 (64 FR 42826).

One of the licensing requirements adopted by the Council for vessels greater than or equal to 125 feet (38.1 m) length overall (LOA) to participate in the groundfish fisheries in the Western GOA was to have made at least one landing in the Western GOA in any 2 of the 4 calendar years 1992, 1993, 1994, or 1995, through June 17, 1995. The LLP proposed rule discussed this requirement in the preamble (at 62 FR 43869) and in the proposed rule text at § 679.4(i)(4)(ii)(E). Vessels that are equal to or greater than 125 feet (38.1 m) LOA were defined as ''category 'A' '' vessels. The proposed rule text described this particular licensing requirement as follows:

> ''A vessel assigned to vessel category 'A' must have made at least one legal landing of any amount of license limitation groundfish harvested in each of any 2 calendar years from January 1, 1992, through June 17, 1995, in the Western Area of the Gulf of Alaska or in State waters shoreward of that area for a Western Gulf area endorsement.''

NMFS' approval of the Council's LLP recommendation included approval of this particular licensing requirement as an integral part of the overall LLP. The final rule implementing the LLP also discussed this licensing requirement in the preamble (at 63 FR 52645) as a documented harvest '' * * * in each of any 2 calendar years from January 1992 through June 17, 1995 * * *.'' However, the final rule text (63 FR 52655, § 679.4(i)(4)(ii)(C)) erroneously omitted the phrase, ''in each of any 2 calendar years,'' and wrongly indicates that only one documented harvest of groundfish needs to be made by category ''A'' vessels during the period January 1992, through June 17, 1995, to satisfy the license endorsement criteria for the Western GOA area.

Paragraph (i) was redesignated as paragraph (k) on October 13, 1998 (63 FR 54753).

Need for Correction

As published, the final regulations contain errors, which may prove to be misleading and need to be clarified.

List of Subjects in 50 CFR Part 679

Alaska, Fisheries, Reporting and Recordkeeping requirements.

Accordingly, 50 CFR part 679 is corrected by making the following correcting amendments:

PART 679–FISHERIES OF THE EXCLUSIVE ECONOMIC ZONE OFF ALASKA

1. The authority citation for part 679 continues to read as follows:

Authority: 16 U.S.C. 773 *et seq.*, 1801 *et seq.*, and 3631 *et seq.*

2. In § 679.4(k)(4)(ii)(C)(1) is revised to read as follows:

§ 679.4 Permits.

* * * * *

(k) * * *

(4) * * *

(ii) * * *

(C) *Western Gulf Area Endorsement.*

(1) Vessel length category ''A.'' For a license to be assigned a Western Gulf area endorsement based on the participation from a vessel in vessel length category ''A,'' at least one documented harvest of any amount of license limitation groundfish must have been made from that vessel in each of any 2 calendar years from January 1, 1992, through June 17, 1995, in the Western Area of the Gulf of Alaska or in State waters shoreward of that area.

* * * * *

Dated: May 8, 2000.

Penelope D. Dalton,

Assistant Administrator for Fisheries, National Marine Fisheries Service.

[FR Doc. 00–12028 Filed 5–11–00; 8:45 am]

BILLING CODE 3510–22–F

Proposed Rules

Federal Register
Vol. 65, No. 93
Friday, May 12, 2000

This section of the FEDERAL REGISTER contains notices to the public of the proposed issuance of rules and regulations. The purpose of these notices is to give interested persons an opportunity to participate in the rule making prior to the adoption of the final rules.

NUCLEAR REGULATORY COMMISSION

10 CFR Part 50

[Docket No. PRM–50–70]

Eric Joseph Epstein; Receipt of Petition for Rulemaking

AGENCY: Nuclear Regulatory Commission.

ACTION: Petition for rulemaking; Notice of receipt.

SUMMARY: The Nuclear Regulatory Commission (NRC) has received and requests public comment on a petition for rulemaking filed by Mr. Eric Joseph Epstein. The petition, docketed on January 3, 2000, has been assigned Docket No. PRM–50–70. The petitioner requests that NRC amend its financial assurance requirements for decommissioning nuclear power reactors to: (1) Require uniform reporting and recordkeeping for all ''proportional owners'' of nuclear generating stations (defined by the petitioner as partial owners of nuclear generating stations who are not licensees); (2) modify and strengthen current nuclear decommissioning accounting requirements for proportional owners; and (3) require proportional owners to conduct a prudency review to determine a balanced formula for decommissioning funding that includes not only ratepayers and taxpayers but shareholders and board members of rural electric cooperatives as well. The petitioner believes that the proposed amendments would eliminate the funding gap for decommissioning between nuclear power licensees and proportional owners of nuclear generating stations.

DATES: Submit comments by July 26, 2000. Comments received after this date will be considered if it is practical to do so, but the Commission is able to assure consideration only for comments received on or before this date.

ADDRESSES: Mail comments to: Secretary, U.S. Nuclear Regulatory Commission, Washington, DC 20555–0001, Attention: Rulemakings and Adjudications Staff.

Deliver comments to: 11555 Rockville Pike, Rockville, Maryland, between 7:30 a.m. and 4:15 p.m. on Federal workdays.

For a copy of the petition, write to David L. Meyer, Chief, Rules and Directives Branch, Division of Administrative Services, Office of Administration, U.S. Nuclear Regulatory Commission, Washington, DC 20555–0001.

You may also provide comments via the NRC's interactive rulemaking website at http://ruleforum.llnl.gov. This site allows you to upload comments as files in any format, if your web browser supports the function. For information about the interactive rulemaking website, contact Carol Gallagher, (301) 415–5905 e-mail:cag@nrc.gov.

The petition and copies of comments received may be inspected and copied for a fee at the NRC Public Document Room, 2120 L Street, NW. (Lower Level), Washington, DC.

FOR FURTHER INFORMATION CONTACT: David L. Meyer, Chief, Rules and Directives Branch, Division of Administrative Services, Office of Administration, U.S. Nuclear Regulatory Commission, Washington, DC 20555–0001, Telephone: 301–415–7162 or Toll Free: 1–800–368–5642 or e-mail:dlm1@nrc.gov.

SUPPLEMENTARY INFORMATION:

The Petitioner

The petitioner, Eric Joseph Epstein, has been actively involved since 1985 in testifying, filing, and intervening on nuclear decommissioning and radioactive waste isolation issues before the NRC and the Pennsylvania Public Utility Commission. The petitioner's research and testimony have focused on Peach Bottom, Units 1, 2, and 3; the Saxton Experimental Reactor; Shippingport Atomic Power Station; the Susquehanna Steam Electric Station (SSES), Units 1 and 2; and Three Mile Island (TMI), Units 1 and 2. The petitioner states that he and General Public Utilities Nuclear (GPUN) sponsored and invested $890,000 in remote robotics research relating to nuclear decommissioning.

Petitioner's Concern

Mr. Epstein submitted his petition for rulemaking because he believes the funding component for decommissioning provided by proportional owners of nuclear generating stations, including rural electric cooperatives (RECs), is fatally flawed and likely to contribute to inadequate funding.

The petitioner states that proportional owners are not required to submit periodic cost projections, conduct site-specific studies, or coordinate with the power reactor licensee. Also, the petitioner states that proportional owners are not mandated by the NRC to verify, report, or monitor recordkeeping relating to nuclear decommissioning funding mechanisms.

The petitioner believes it is grossly unfair and inequitable to require Federal taxpayers and State ratepayers to provide a financial safety net for the nuclear investments of proportional owners. The petitioner offers the following reasons to support his belief: (1) Proportional owners, including RECs, aggressively supported construction, licensing, and operation of nuclear generating stations; (2) they were fully cognizant that no commercial nuclear reactor had been decommissioned, and that a solution to nuclear waste disposal did not exist; (3) neither the utility, industry, proportional owners, nor RECs, have actively sponsored decommissioning research or sought good faith solutions to the permanent storage and isolation of low-level and high-level radioactive waste; and (4) proportional owners and RECs, willfully pursued a financial investment in nuclear energy which they knew was fraught with huge uncertainties.

Background

Definition of an Electric Utility

The petitioner states that utility deregulation has caused concern regarding future rate recovery for the nuclear industry. The petitioner explains that NRC had anticipated the nuclear industry's financial apprehension and acted accordingly by promulgating regulations to resolve the industry's concern. The petitioner notes that the NRC published proposed amendments on September 10, 1997 (62 FR 47588), in response to the potential deregulation of the power generating

industry and to questions as to whether it should modify its current regulations concerning decommissioning funds and their financial mechanisms. The proposed rule was issued as a final rule on September 22, 1998 (63 FR 50465), a fact not indicated by the petitioner.

The petitioner states that the NRC extended the definition of an ''electric utility'' to include:

> An entity whose rates are established by a regulatory authority by mechanisms that cover only a portion of the costs collected in this manner. Public utility districts, municipalities, rural electric cooperatives and State and Federal agencies, including associations of any of the foregoing, that establish their own rates are included within the meaning of ''electric utility.'' (Section 50.2, Definitions, [September 10, 1997; 62 FR 47605].)

However, according to the petitioner, the NRC created a legal loophole for proportional owners and RECs, by limiting reporting and recordkeeping requirements to ''power reactor licensees,'' thus enabling partial owners to be free from NRC scrutiny. The petitioner recommends that NRC mandate that all partial owners of nuclear generating stations, including RECs, be subject to reporting and recordkeeping requirements and pre-funding thresholds and timetables in Section 50.75 (a) through (e).

Current Problems Associated With Cost Estimates for Radiological Decommissioning

The petitioner questions the reliability of nuclear decommissioning cost projections provided by industry consultant, Thomas LaGuardia, and TLG, Inc. The petitioner states that TLG-based decommissioning estimates on flawed and specious field studies extrapolated from small, minimally contaminated, and prematurely shut-down nuclear reactors.

The petitioner states that wild fluctuation in the cost estimates for radiological decommissioning are attributable to the lack of actual decommissioning experience at large nuclear generating stations, over 1000 megawatts electric (MWe), or at plants that have operated for their full, planned lifespan. The petitioner indicates that the largest nuclear power plant to be fully decommissioned was Shippingport Atomic Power Station, a 72 MWe light-water breeder reactor that is substantially smaller than SSES, Units 1 and 2 (1050 MWe for each unit).

The petitioner states that TLG, Inc., admitted that Shippingport was ''almost like a pilot plant.'' The petitioner believes that the immense differences between Shippingport and the SSES make any financial comparison between the two inadequate and baseless. The petitioner states that although several other nuclear reactors are being prepared for decommissioning, they provide little meaningful decommissioning experience that could be used to reliably predict the decommissioning costs of SSES. As examples, the petitioner provides detailed discussions regarding the decommissioning cases of Yankee Rowe and Shoreham.

The petitioner states that no commercial nuclear power plant has been decommissioned, decontaminated, and returned to free-release. According to the petitioner, nuclear decontamination and decommissioning technologies are in their infancy. The petitioner characterizes the NRC's treatment of prematurely shutdown reactors as follows: (1) There is a reluctance to undertake, initiate or finance decommissioning research; (2) prematurely shutdown reactors place an additional financial strain on the licensee; and (3) these reactors have been retired for mechanical or economic reasons. [United States Nuclear Regulatory Commission, Advisory Panel for the Decommissioning of Three Mile Island Unit-2, September 23, 1993].

The petitioner states that Pennsylvania Power and Light, Inc. (PP&L) contracted with TLG to construct decommissioning cost estimates based on work completed at Shippingport, Shoreham, Yankee Rowe, and small prototype reactors such as: BONUS (17 MWe), Elk River (20 MWe), and Pathfinder (60 MWe). The petitioner asserts that TLG's estimates relied on: (1) The development of nonexistent technologies; (2) anticipated projected cost of radioactive disposal; and (3) the assumption that costs for decommissioning small and short-lived reactors can be accurately extrapolated to apply to large commercial reactors operating for 40 years.

The petitioner indicates that in 1981, PP&L predicted that its share to decommission SSES would be between $135 and $191 million. The petitioner notes that estimate has increased by at least 553 percent in the last 19 years.

Proportional Confusion: The Case of the Allegheny Electric Cooperative and Pennsylvania Power and Light, Inc.

The petitioner questions Allegheny Electric Cooperative's (Allegheny) method for calculating decommissioning cost. The petitioner states that Allegheny owns 10 percent of the SSES, while PP&L owns 90 percent. The petitioner states that Allegheny is responsible for 10 percent of the projected funding target for decommissioning. The petitioner states that PP&L's consultant, TLG, estimates PP&L's share for decommissioning SSES to be $724 million. Therefore, according to the petitioner, Allegheny's share would be $79 million of the $804 million projected cost for decommissioning. However, the petitioner asserts that Allegheny has set aside only 5 percent (rather than 10 percent) of its projected share of the cost of decommissioning. According to the petitioner, the Allegheny's Director of Finance and Administrative Service states that Allegheny is basing its decommissioning estimates on data provided by PP&L (i.e., Allegheny's portion of the estimated cost of decommissioning SSES is approximately $37.8 million and is being accrued over the estimated useful life of the plant). The petitioner asserts that Allegheny does not know what method it is employing to calculate decommissioning cost. In addition, PP&L does not actively monitor Allegheny's obligations.

The petitioner characterizes the uncertainty between decommissioning partners as crucial and potentially debilitating and believes that the question of financial responsibility is increasingly important since PP&L has no enforcement mechanism to compel Allegheny to fund 10 percent of the decommissioning cost. The petitioner adds that Allegheny is owned and controlled by 14 distribution cooperatives. Allegheny is not regulated by the Public Utility Commission (PUC) and does not have publicly traded stock. Therefore, the petitioner assets there is no behavior modifying mechanism to allow State regulators or PP&L shareholders to oversee Allegheny's contributions.

The petitioner believes that Allegheny's tenuous financial position regarding decommissioning savings will place a greater fiscal burden on PP&L by: (1) Creating further uncertainties about PP&L's ability to meet its financial commitments to decommission SSES; (2) undermining TLG's net decommissioning estimates; and (3) radically skewing TLG's contingency factor. The petitioner asserts that if this scenario is realized by other power reactor licensees and their proportional partners, the ripple effect could be staggering and could potentially expose ratepayers and taxpayers to billions of dollars in nuclear decommissioning shortfalls. In addition, the petitioner states that although the NRC requires that all nuclear power plants be returned to greenfield, i.e., the original environmental status of the facilities

prior to construction, it does not mandate cost estimates for non-radiological decommissioning. Furthermore, the petitioner asserts that greenfield has not been achieved by any large commercial nuclear plant, and utilities are not required to save for the mandated restoration; therefore, placing additional strain on the companies' ability to finance radiological and non-radiological decommissioning.

Planned Operating Life for Nuclear Generating Stations

The petitioner states that experience at large commercial nuclear power plants over 200 MW has clearly demonstrated that TLG's assumption that nuclear units will operate for 40 years contradicts existing nuclear experience. The petitioner has identified and provided detailed information on 13 nuclear power plants that have shut down prematurely. The petitioner states that a sense of fair play, intergenerational equity, and fiduciary accountability should direct proportional owners, including RECs, to plan for decommissioning on the basis of the assumption that their nuclear units will prematurely shut down. The petitioner adds that operating capacity and historical evidence from commercial nuclear power plants do not indicate that nuclear power plants will operate for 40 years. The petitioner assesses that there are chronic shortfalls between targeted funding levels and actual costs for nuclear decommissioning. The petitioner asserts that the burden of proof lies with the power reactor licensees and their partners to demonstrate that the 40-year lifespan that they predicate their financial planning upon is realistic. The petitioner believes the nuclear industry has exacerbated this problem by refusing to provide adequate funding for nuclear decontamination and decommissioning.

Spent Fuel Isolation

The petitioner states that a significant problem for nuclear generating stations is that the fuel storage capacity will be exhausted before the plant license expires. The petitioner states that because there is no location to store spent fuel permanently, nuclear facilities have become de facto high-level, radioactive waste sites, and many are currently proposing to increase the capacity to store this waste using an untested, commercial waste technology (dry cask storage). The petitioner contends that the additional cost of increasing the capacity of spent fuel will have a significant effect on decommissioning. The petitioner notes that at SSES, spent fuel costs were omitted from TLG's decommissioning estimate. The petitioner explains that: (1) Isolation of high-level radioactive waste, which is primarily composed of spent nuclear fuel, cannot be separated from nuclear decommissioning; (2) at the earliest, Yucca Mountain, the designated repository for the storage of nuclear waste, will be available in 2010; (3) nuclear generating stations cannot be immediately decontaminated and decommissioned with spent fuel on site or inside the vessel; (4) aggressive and destructive decontamination cleanup processes will be unavailable until spent fuel is removed from the nuclear plant's temporary storage facilities; (5) front-end decommissioning tasks require skilled workers for site-specific tasks; and (6) labor costs are erratic and should be linked to inflationary indices.

The petitioner charges that NRC and the nuclear industry devote scant resources to decommissioning research and development. The petitioner believes that this laissez-faire approach should not be rewarded by financially penalizing ratepayers and taxpayers. The petitioner warns that if a long-term solution to spent fuel isolation is not found in the near future, many nuclear generating stations will be shut down prematurely because of a lack of storage space. Therefore, the petitioner believes that cost projections by proportional owners and RECs, must include variable funding scenarios in the event a high-level radioactive isolation site is not available during a premature shutdown, or at the end of a plant's planned 40-year operating life span.

Low-Level Radioactive Waste Isolation

The petitioner states that TLG provided nuclear waste storage and nuclear decommissioning cost estimates for all Pennsylvania utilities regulated by the PUC. The petitioner states that TLG's representative based his cost estimates for low-level radioactive waste (LLRW) disposal on the assumption that the Appalachian Compact would be available when SSES closes (1995 PP&L Base Rate Case, Page 1034, Lines 17–20). The petitioner states that the representative concluded that the disposal of LLRW is the most expensive component in the decommissioning formula (Page 2091, Lines 21–25); however, the representative conceded that it may be necessary to recompute cost estimates for disposal because the Barnwell storage facility for LLRW will be open for 7 to 10 years for all states except North Carolina (Page 2108, Lines 4–9). The petitioner notes that PP&L has not reconfigured the cost of LLRW disposal since Barnwell opened July 5, 1995.

The petitioner asserts that in addition to recomputing the cost of LLRW disposal, the reopening of Barnwell has definitely postponed the siting of a waste facility in Pennsylvania. The petitioner notes the Appalachian States LLRW Commission Executive Director observed: ''If Barnwell's going to be open to the entire country for at least the next 10 years, is there really a pressing need to continue work on regional disposal facilities?'' The petitioner states that on June 18, 1998, the Appalachian States LLRW Commission voted to support the Pennsylvania Department of Environmental Protection's suspension of the siting process for an LLRW disposal facility.

Court Cases

The petitioner states that United States regulatory law has never recognized the right of utilities to recover imprudent, highly speculative utility expenditures, citing Bluefield Water Works & Improvement Company v. Public Service Commission of the State of West Virginia, 262 U.S. 668, 678 (1923) and State of Missouri ex rel. Southwestern Bell Telephone Company v. Public Service Commission of Missouri, 262 U.S. 276, 289 (1923).

The petitioner has included detailed information from other court cases that recommend prudency review of requests by utilities for rate increases. The petitioner asserts that the concerns expressed in the various court cases discussed in this petition by the commissions vested with the responsibility of approving rate hike requests, tax increases, and recovery of new construction costs, are valid and applicable to the issue of imprudent ''stranded costs'' and grossly inadequate decommissioning projections. The petitioner recommends that an extensive prudency review of the costs incurred by power reactor licensees, their partners, and RECs, in the construction of nuclear power plants and subsequent decisions by the owners and operators in their continuing operation is mandated by the speculative and imprudent nature of corporate management.

Petitioner's Conclusion

The petitioner states that data clearly demonstrate that the majority of commercial nuclear power plants will not operate through their planned operating life of 40 years. The petitioner believes that while the power reactor licensees are entitled to recover a portion of decommissioning funding

through the rate and tax relief processes, they are not entitled to a full and complete rebate on ''stranded investments'' and shortfalls that will arise because funding targets for decommissioning have been underfunded. The petitioner believes that shareholders and board members of electric utilities and RECs, must assume responsibility for their business decision. The petitioner adds that to allow artificial definitions concerning ownership of nuclear power plants to insulate those who cogently made capital investments is immoral, unethical, and an endorsement of corporate socialism. The petitioner asserts that shareholders profit from imprudent investment decisions and are accorded relief when error of mismanagement becomes manifest. The petitioner believes that society, the nuclear industry, proportional owners and RECs, must assume responsibility for their investment strategies.

Remedies

The petitioner recommends the following remedies:

1. RECs, and proportional partners of nuclear generating stations that are not specified as the power reactor licensee must conduct a revised and updated site-specific analysis biennially based on prevailing realities that include a recognition that the NRC is redefining the concept of ''electric utility'; scientifically verifiable cost projections for the nuclear decommissioning ''target'; premature shutdowns of a substantial number of commercial nuclear generating stations; dry cask storage planning and construction; the asserted indisputable fact that Yucca Mountain will not be available at the time the spent fuel capacity has been breached at many operating nuclear generating stations; and, the asserted reality that the concept of regional low-level waste facilities has been supplanted by the extended operating life of ''low-level'' radioactive waste facilities.

2. Prevailing legal precedent undermines the notion that nuclear partnerships are entitled to full rate relief from present ratepayers and taxpayers for nuclear decommissioning costs. A sense of fair play, intergenerational equity, and risk sharing between ratepayers and taxpayers on one hand, and shareholders and board members on the other, necessitate that the NRC direct and extend the conditions and mandates promulgated in Section 50.75, Reporting and Recordkeeping for Decommissioning Planning, (a), (b), (c), (d), (e), and (f), to include all partners in nuclear generating stations, including board members of RECs; and,

3. After implementing remedies (1) and (2), NRC must compel proportional owners of nuclear power generating stations, including RECs, to conduct prudency reviews.

The petition, which consists of a 37-page brief, provides additional justification and support for the requested amendments not included in this **Federal Register** notice. The NRC requests that commenters consider, among other matters raised by petitioner, whether all of the remedies requested by petitioner are within the regulatory scope and jurisdiction of the NRC. By publishing this notice, the NRC is not concluding that it has jurisdiction over all of petitioner's requested remedies. Members of the public interested in filing comments on PRM–50–70 are urged to obtain a copy of the petition by writing to the address under **ADDRESSES** or by viewing the petition at the NRC website at http://ruleforum.llnl.gov.

Dated at Rockville, Maryland this 8th date of May 2000.

For the Nuclear Regulatory Commission.

Annette Vietti-Cook,

Secretary of the Commission.

[FR Doc. 00–11955 Filed 5–11–00; 8:45 am]

BILLING CODE 7590–01–P

DEPARTMENT OF TRANSPORTATION

Federal Aviation Administration

14 CFR Part 39

[Docket No. 2000–NM–91–AD]

RIN 2120–AA64

Airworthiness Directives; Boeing Model 767 Series Airplanes

AGENCY: Federal Aviation Administration, DOT.

ACTION: Notice of proposed rulemaking (NPRM).

SUMMARY: This document proposes the adoption of a new airworthiness directive (AD) that is applicable to certain Boeing Model 767 series airplanes. This proposal would require installation of sleeving on the 90-minute auxiliary power unit (APU) standby power feeder cable at body station 1351. This proposal is prompted by a report of damage to the 90-minute APU standby power feeder cable caused by shifting of unrestrained cargo containers during flight. The actions specified by the proposed AD are intended to prevent damage to the 90-minute APU standby power feeder cable, which could result in arcing between the standby power feeder cable and the shroud of the APU fuel line, penetration of the fuel line shroud, and a consequent fire in the main deck floor above the aft cargo compartment.

DATES: Comments must be received by June 26, 2000.

ADDRESSES: Submit comments in triplicate to the Federal Aviation Administration (FAA), Transport Airplane Directorate, ANM–114, Attention: Rules Docket No. 2000–NM–91–AD, 1601 Lind Avenue, SW., Renton, Washington 98055–4056. Comments may be inspected at this location between 9:00 a.m. and 3:00 p.m., Monday through Friday, except Federal holidays.

The service information referenced in the proposed rule may be obtained from Boeing Commercial Airplane Group, P.O. Box 3707, Seattle, Washington 98124–2207. This information may be examined at the FAA, Transport Airplane Directorate, 1601 Lind Avenue, SW., Renton, Washington.

FOR FURTHER INFORMATION CONTACT: Holly Thorson, Aerospace Engineer, Propulsion Branch, ANM–140S, FAA, Transport Airplane Directorate, Seattle Aircraft Certification Office, 1601 Lind Avenue, SW., Renton, Washington 98055–4056; telephone (425) 227–1357; fax (425) 227–1181.

SUPPLEMENTARY INFORMATION:

Comments Invited

Interested persons are invited to participate in the making of the proposed rule by submitting such written data, views, or arguments as they may desire. Communications shall identify the Rules Docket number and be submitted in triplicate to the address specified above. All communications received on or before the closing date for comments, specified above, will be considered before taking action on the proposed rule. The proposals contained in this notice may be changed in light of the comments received.

Comments are specifically invited on the overall regulatory, economic, environmental, and energy aspects of the proposed rule. All comments submitted will be available, both before and after the closing date for comments, in the Rules Docket for examination by interested persons. A report summarizing each FAA-public contact concerned with the substance of this proposal will be filed in the Rules Docket.

Commenters wishing the FAA to acknowledge receipt of their comments submitted in response to this notice

must submit a self-addressed, stamped postcard on which the following statement is made: ''Comments to Docket Number 2000–NM–91–AD.'' The postcard will be date stamped and returned to the commenter.

Availability of NPRMs

Any person may obtain a copy of this NPRM by submitting a request to the FAA, Transport Airplane Directorate, ANM–114, Attention: Rules Docket No. 2000–NM–91–AD, 1601 Lind Avenue, SW., Renton, Washington 98055–4056.

Discussion

The FAA has received a report indicating that unrestrained cargo containers shifted during flight and caused damage on a Boeing Model 767 series airplane that is equipped with an auxiliary power unit (APU) extended standby power system. The cargo containers damaged the 90-minute APU standby power feeder cable and the cabin floor support beam at body station (BS) 1351 on the right side of the airplane. Investigation revealed evidence of arcing between the cable and the beam. Though the reported damage occurred on the right side of the airplane, an unrestrained cargo container that shifts during flight could cause similar damage on the left side of the airplane. On the left side of the airplane, the 90-minute APU standby power feeder cable is routed close to the APU fuel line. Should damage to the 90-minute APU standby power feeder cable occur on the left side of the airplane, the damaged power feeder cable could arc against the shroud of the APU fuel line. This condition, if not corrected, could result in penetration of the fuel line shroud and a consequent fire in the main deck floor above the aft cargo compartment.

Explanation of Relevant Service Information

The FAA has reviewed and approved Boeing Alert Service Bulletin 767–24A0126, dated February 24, 2000. That alert service bulletin describes procedures for installation of sleeving on the 90-minute APU standby power feeder cable at BS 1351 on the left side of the airplane. Installation of this sleeving is intended to protect the cable from being damaged in the event that an unrestrained cargo container shifts during flight and impacts the cable. Accomplishment of the action specified in the service bulletin is intended to adequately address the identified unsafe condition.

Explanation of Requirements of Proposed Rule

Since an unsafe condition has been identified that is likely to exist or develop on other products of this same type design, the proposed AD would require accomplishment of the actions specified in the service bulletin described previously.

Cost Impact

There are approximately 151 airplanes of the affected design in the worldwide fleet. The FAA estimates that 14 airplanes of U.S. registry would be affected by this proposed AD, that it would take approximately 1 work hour per airplane to accomplish the proposed action, and that the average labor rate is $60 per work hour. Based on these figures, the cost impact of the proposed AD on U.S. operators is estimated to be $840, or $60 per airplane.

The cost impact figure discussed above is based on assumptions that no operator has yet accomplished any of the proposed requirements of this AD action, and that no operator would accomplish those actions in the future if this AD were not adopted.

Regulatory Impact

The regulations proposed herein would not have a substantial direct effect on the States, on the relationship between the national Government and the States, or on the distribution of power and responsibilities among the various levels of government. Therefore, it is determined that this proposal would not have federalism implications under Executive Order 13132.

For the reasons discussed above, I certify that this proposed regulation: (1) Is not a ''significant regulatory action'' under Executive Order 12866; (2) is not a ''significant rule'' under the DOT Regulatory Policies and Procedures (44 FR 11034, February 26, 1979); and (3) if promulgated, will not have a significant economic impact, positive or negative, on a substantial number of small entities under the criteria of the Regulatory Flexibility Act. A copy of the draft regulatory evaluation prepared for this action is contained in the Rules Docket. A copy of it may be obtained by contacting the Rules Docket at the location provided under the caption **ADDRESSES**.

List of Subjects in 14 CFR Part 39

Air transportation, Aircraft, Aviation safety, Safety.

The Proposed Amendment

Accordingly, pursuant to the authority delegated to me by the Administrator, the Federal Aviation Administration proposes to amend part 39 of the Federal Aviation Regulations (14 CFR part 39) as follows:

PART 39—AIRWORTHINESS DIRECTIVES

1. The authority citation for part 39 continues to read as follows:

Authority: 49 U.S.C. 106(g), 40113, 44701.

§ 39.13 [Amended]

2. Section 39.13 is amended by adding the following new airworthiness directive:

Boeing: Docket 2000–NM–91–AD.

Applicability: Model 767 series airplanes; as listed in Boeing Alert Service Bulletin 767–24A0126, dated February 24, 2000; certificated in any category.

Note 1: This AD applies to each airplane identified in the preceding applicability provision, regardless of whether it has been modified, altered, or repaired in the area subject to the requirements of this AD. For airplanes that have been modified, altered, or repaired so that the performance of the requirements of this AD is affected, the owner/operator must request approval for an alternative method of compliance in accordance with paragraph (b) of this AD. The request should include an assessment of the effect of the modification, alteration, or repair on the unsafe condition addressed by this AD; and, if the unsafe condition has not been eliminated, the request should include specific proposed actions to address it.

Compliance: Required as indicated, unless accomplished previously.

To prevent damage to the 90-minute auxiliary power unit (APU) standby power feeder cable, which could result in arcing between the standby power feeder cable and the shroud of the APU fuel line, penetration of the fuel line shroud, and a consequent fire in the main deck floor above the aft cargo compartment, accomplish the following:

Installation of Sleeving

(a) Within 6 months after the effective date of this AD, install sleeving on the 90-minute APU standby power feeder cable at body station 1351 on the left side of the airplane, in accordance with Boeing Alert Service Bulletin 767–24A0126, dated February 24, 2000.

Alternative Methods of Compliance

(b) An alternative method of compliance or adjustment of the compliance time that provides an acceptable level of safety may be used if approved by the Manager, Seattle Aircraft Certification Office (ACO), FAA, Transport Airplane Directorate. Operators shall submit their requests through an appropriate FAA Principal Maintenance Inspector, who may add comments and then send it to the Manager, Seattle ACO.

Note 2: Information concerning the existence of approved alternative methods of compliance with this AD, if any, may be obtained from the Seattle ACO.

Special Flight Permits

(c) Special flight permits may be issued in accordance with §§ 21.197 and 21.199 of the Federal Aviation Regulations (14 CFR 21.197 and 21.199) to operate the airplane to a location where the requirements of this AD can be accomplished.

Issued in Renton, Washington, on May 8, 2000.

Vi L. Lipski,

Acting Manager,, Transport Airplane Directorate, Aircraft Certification Service.

[FR Doc. 00–11952 Filed 5–11–00; 8:45 am]

BILLING CODE 4910–13–P

DEPARTMENT OF COMMERCE

International Trade Administration

DEPARTMENT OF THE TREASURY

Customs Service

15 CFR Part 301

[Docket No. 000331091–0091–01]

RIN 0625–AA47

Proposed Changes in Procedures for Florence Agreement Program

AGENCIES: Import Administration, International Trade Administration, Department of Commerce; U.S. Customs Service, Department of the Treasury.

ACTION: Proposed rule and request for comments.

SUMMARY: This action invites public comment on a proposal to amend the regulations which govern duty-free entry of scientific instruments and apparatus, by educational and nonprofit institutions, into the United States. The amendments are being proposed for the purposes of making the technical changes required by the passage of the Omnibus Trade and Competitiveness Act of 1988 and by passage of the Miscellaneous Trade and Technical Corrections Act of 1999; updating the regulations by specifying the correct court of review, taking into account terminological changes in the scientific community, and by extending the waiver for repair components to maintenance tools as well; and simplifying and clarifying the regulations for the using community by clarifying the commercial use provisions and removing redundant requirements, adding information about procedures for obtaining duty refunds, reducing the number of copies required for resubmissions and permitting performance data obtained in tests or trials as evidence of guaranteed specifications.

DATES: Written comments must be received on or before June 12, 2000.

ADDRESSES: Address written comments to Gerald Zerdy, Program Manager, Statutory Import Programs Staff, Room 4211, U.S. Department of Commerce, Washington D.C. 20230.

FOR FURTHER INFORMATION CONTACT: Gerald Zerdy, (202) 482–1660, same address as above.

SUPPLEMENTARY INFORMATION: The Departments of Commerce and the Treasury are proposing to amend Part 301, Chapter III, Subtitle B of Title 15 of the Code of Federal Regulations relating to their responsibilities under the Educational, Scientific, and Cultural Materials Importation Act of 1966 (the ''Act''; Pub. L. 89–651; 80 Stat. 897).

The proposed rule would make the necessary technical changes to reflect the conversion from the Tariff Schedule of the United States (TSUS) to the Harmonized Tariff Schedule of the United States (HTSUS); and the modification made by Proclamation 5978 of May 12, 1989, which was issued pursuant to sections 1121 and 1204 of the Omnibus Trade and Competitiveness Act of 1988 (Pub. L. 100–418) and section 604 of the Trade Act of 1974 (Pub. L. 93–618), as amended; and the statutory amendment made by section 2402 of the Miscellaneous Trade and Technical Corrections Act of 1999 (Pub. L. 106–36). The proposed rule would also make editorial and administrative changes, including updating terminology.

Specifically, we propose amending § 301.2(h) to provide further information about the entry of accessories for existing instruments.

We propose amending paragraph (r) of § 301.2 to permit performance data obtained from a trial or test run of an instrument, under conditions specified by the applicant, to be used as evidence for a guaranteed specification since this is sometimes stipulated as a condition for purchase or provides the basis for selecting one instrument over another. In the past, applicants have regularly cited such ad hoc performance data to support their justification for duty exemption.

We propose removing the language in § 301.4(a)(1) that refers to specific documentation Customs may require to establish the applicant's nonprofit or tax exempt status. The proposed revision leaves the method of this determination to the discretion of Customs.

We propose amending § 301.4(a)(3) to further emphasize that an applicant may not participate in the development and evaluation of an instrument, beyond routine acceptance testing and calibration, if substantial benefits accrue to the manufacturer as a result of such participation for which the applicant receives a valuable consideration. The purpose of this change is to clarify the conditions of compliance with the statutory prohibition of commercial use within five years of entry (see § 301.1(c)(1)).

We propose amending § 301.5(a)(1) by making copies of applications available for public inspection within five days of receipt from Customs instead of the ten days currently specified in the regulations. This amendment would bring the rule into accord with established practice.

The proposed rule would eliminate § 301.5(a)(7), which relates to the routine sending of copies of applications to interested domestic manufacturers. Use of this service has been extremely limited. While the routine provision of copies would be eliminated, we would continue to provide copies on a case-by-case basis if requested.

We propose amending § 301.5(c)(3) by removing language requesting consultants to provide advice within 30 days. Routine interagency procedures do not require codification. ''National Bureau of Standards'' would be replaced by ''National Institute of Standards and Technology.''

We propose to reduce the paperwork burden on applicants by amending § 301.5(e)(3) to permit resubmissions by facsimile, e-mail or other electronic means in addition to posted mail, and to permit resubmissions with an original copy only instead of in quadruplicate. We also propose amending § 301.5(e)(5) to conform with this change.

We propose to eliminate § 301.5(e)(9), which provides for comment by interested parties on resubmitted applications. Interested parties are afforded ample opportunity to comment on the original applications. Also, applicants are not permitted to introduce new purposes or other material changes in a resubmission. Accordingly, no useful purpose is served by the existing procedure.

We propose to amend § 301.8(d) to inform the applicant that estimated duties levied by U.S. Customs at the time of entry may be refundable, and to instruct the applicant to contact Customs at the port of entry for information and claims status.

Presidential Proclamation 5978 of May 12, 1989, issued pursuant to sections 1121 and 1204 of the Omnibus Trade and Competitiveness Act of 1988 and section 604 of the Trade Act of 1974, as amended, added maintenance tools for scientific instruments to the list

of items eligible for duty-free import under the Act. Accordingly, we propose amending § 301.10 (a) to add maintenance tools to the scope of the waiver already in place for repair tools.

Regulatory Flexibility Act

In accordance with the Regulatory Flexibility Act, 5 U.S.C. 601 *et seq.*, the Chief Counsel for Regulation at the Department of Commerce has certified to the Chief Counsel for Advocacy, Small Business Administration, that the proposed rule, if promulgated as final, will not have a significant economic impact on a substantial number of small entities. This is because the rulemaking is primarily to update, clarify, and simplify the regulations, make technical changes and reduce paperwork.

Paperwork Reduction Act

This rulemaking involves information collection activities subject to the Paperwork Reduction Act of 1980, 44 U.S.C. 3501 *et seq.*, which are currently approved by the Office of Management and Budget under control number 0625–0037. The proposed amendments reduce the information burden on the public by, among other things, eliminating the need for copies in a resubmission, making provision for resubmissions in electronic formats and eliminating the need to make application for maintenance tools.

Executive Order 12866

It has been determined that the proposed rulemaking is not significant for purposes of Executive Order 12866.

List of Subjects in 15 CFR Part 301

Administrative practice and procedure, Customs duties and inspection, Educational facilities, Imports, Nonprofit organizations, Scientific equipment.

For reasons set forth above, 15 CFR part 301 is proposed to be amended as follows:

PART 301—[AMENDED]

1. The authority citation for part 301 is revised to read as follows:

Authority: Sec. 6 (c), Pub. L. 89–651, 80 Stat. 897, 899; Sec. 2402, Pub. L. 106–36, 113 Stat. 127, 168.

2. Amend part 301 as follows:

a. Revise all references to ''tariff item 851.60'', ''item 851.60'', or ''item 851.60, TSUS'' to read ''subheading 9810.00.60, HTSUS''.

b. Revise all references to ''item 851.65'' or ''tariff item 851.65'' to read ''subheading 9810.00.65, HTSUS''.

3. Amend § 301.1 as follows:

a. Paragraph (b)(1) is amended by removing '', contracted to by approximately 89 countries'';

b. Paragraph (d) is amended by removing ''Headnote 6, TSUS'' from the first sentence and adding ''U.S. Note 6, Subchapter X, Chapter 98, HTSUS'' in its place; by removing ''and Operations'' in the second sentence; and by removing ''Deputy'' in the third sentence;

c. Revise paragraphs (b)(3), (c)(1) and (c)(2); and

d. Add paragraph (c)(4).

§ 301.1 General provisions.

* * * * *

(b) * * *

(3) The Annex D provisions are implemented for U.S. purposes in Subchapter X, Chapter 98, Harmonized Tariff Schedule of the United States (HTSUS).

(c) Summary of statutory procedures and requirements. (1) U.S. Note 1, Subchapter X, Chapter 98, HTSUS, provides, among other things, that articles covered by subheadings 9810.00.60 (scientific instruments and apparatus), 9810.00.65 (repair components therefor) and 9810.00.67 (tools for maintaining and testing the above therefor), HTSUS, must be exclusively for the use of the institutions involved and not for distribution, sale, or other commercial use within five years after having been entered. These articles may be transferred to another qualified nonprofit institution, but any commercial use within five years of entry shall result in the assessment of applicable duties pursuant to § 301.9(c).

(2) An institution wishing to enter an instrument or apparatus under tariff subheading 9810.00.60, HTSUS, must file an application with the Secretary of the Treasury (U.S. Customs Service) in accordance with these regulations. If the application is made in accordance with the regulations, notice of the application is published in the **Federal Register** to provide an opportunity for interested persons and government agencies to present views. The application is reviewed by the Secretary of Commerce (Director, Statutory Import Programs Staff) , who decides whether or not duty-free entry may be accorded the instrument and publishes the decision in the **Federal Register**. An appeal of the final decision may be filed with the U.S. Court of Appeals for the Federal Circuit, on questions of law only, within 20 days after publication in the **Federal Register**.

* * * * *

(4) Tools specifically designed to be used for the maintenance, checking, gauging or repair of instruments or apparatus admitted under subheadings 9810.00.65 and 9810.00.67, HTSUS, require no application and may be entered duty-free in accordance with the procedures prescribed in § 301.10.

* * * * *

§ 301.2 [Amended]

4. Amend § 301.2 as follows:

a. Paragraph (f) is amended by removing ''only'' in the first sentence; by removing ''classifiable under the tariff items specified in headnote 6(a) of part 4 of Schedule 8'' and adding in its place ''specified in U.S. Note 6(a), Subchapter X, Chapter 98, HTSUS''; and by adding the following after the second sentence: ''The term ''instrument'' also covers separable components of an instrument that are imported for assembly in the United States in such instrument where that instrument, due to its size, cannot feasibly be imported in its assembled state. The components, as well as the assembled instrument itself, must be classifiable under the tariff provisions listed in U.S. Note 6(a), Subchapter X, Chapter 98, HTSUS. See § 301.2(k) and § 301.3(f).'';

b. Paragraph (f)(5) is amended by removing all that follows ''under bond under'' and adding in its place the following: ''subheading 9813.00.30, HTSUS, subject to the provisions of U.S. Note 1(a), Subchapter XIII, Chapter 98, HTSUS, and must be exported or destroyed within the time period specified in that U.S. Note.'';

c. Paragraph (h) is amended by adding a new sentence to the end of the paragraph to read: ''The existing instrument, for which the accessory is being purchased, may be domestic or, if foreign, it need not have entered duty free under subheading 9810.00.60, HTSUS.'';

d. Paragraph (k) is amended by adding the following at the end of the paragraph: ''The above notwithstanding, separable components of some instruments may be eligible for duty-free treatment. See § 301.2(f).'';

e. Paragraph (r) is amended by removing ''angstroms'' in the second sentence and adding ''nanometers'' in its place, and by adding a sentence at the end of the paragraph to read: ''Performance results on a test sample run at the applicant's request may be cited as evidence for or against a guaranteed specification.''; and

f. Paragraph(s) is amended by removing ''and/'' from the first sentence, removing the last sentence and adding in its place the following: ''Also, characteristics such as size, weight, appearance, durability, reliability, complexity (or simplicity), ease of

operation, ease of maintenance, productivity, versatility, ''state of the art'' design, specific design and compatibility with currently owned or ordered equipment are not pertinent unless the applicant demonstrates that the characteristic is necessary for the accomplishment of its scientific purposes.''

5. Amend § 301.3 as follows:

a. Paragraph (d) is amended by removing ''One copy of the form'' from the second sentence and adding in its place ''One of these copies'';

b. Redesignate paragraph (f) as paragraph (g); and

c. Add a new paragraph (f).

§ 301.3 Application for duty-free entry of scientific instruments.

* * * * *

(f) An application for components of an instrument to be assembled in the United States as described in § 301.2(f) may be filed provided that all of the components for the complete, assembled instrument are covered by, and fully described in, the application. See also § 301.2(k).

* * * * *

6. In § 301.4, paragraphs (a)(1), (a)(2) and the first two sentences of (a)(3) are revised to read as follows:

§ 301.4 Processing of applications by the Department of the Treasury (U.S. Customs Service).

(a) * * *

(1) Whether the institution is a nonprofit private or public institution established for research and educational purposes and therefore authorized to import instruments into the U.S. under subheading 9810.00.60, HTSUS. In making this determination, the Commissioner may require applicants to document their eligibility under this paragraph;

(2) Whether the instrument or apparatus falls within the classes of instruments eligible for duty-free entry consideration under subheading 9810.00.60, HTSUS. For eligible classes, see U.S. Note 6(a), Subchapter X, Chapter 98, HTSUS; and

(3) Whether the instrument or apparatus is for the exclusive use of the applicant institution and is not intended to be used for commercial purposes. For the purposes of this section, commercial uses would include, but not necessarily be limited to: distribution, lease or sale of the instrument by the applicant institution; any use by, or for the primary benefit of, a commercial entity; or use of the instrument for demonstration purposes in return for a fee, price discount or other valuable consideration. Evaluation, modification or testing of the foreign instrument, beyond normal, routine acceptance testing and calibration, to enhance or expand its capabilities primarily to benefit the manufacturer in return for a discount or other valuable consideration, may be considered a commercial benefit. * * *

* * * * *

7. Amend § 301.5 as follows:

a. Paragraph (a)(1) is amended by removing ''10'' from the first sentence and adding ''5'' in its place;

b. Paragraph (a)(2) is amended by removing ''contained in Question 11 of the form'' in the second sentence and adding ''on the form'' in its place, and by adding ''pursuant to paragraph (e) of this section'' at the end of the last sentence;

c. Paragraph (a)(3) is amended by removing the last sentence;

d. Paragraph (a)(4)(v) is amended by removing ''submitted a formal'' and adding ''issued an'' in its place;

e. Paragraph (a)(5) is amended by removing ''on an application'' from the first sentence, by removing ''in his discretion, may entertain comments filed untimely to the extent that they contain factual information, as opposed to arguments, explanations, or recommendations'' from the second sentence and by adding ''at his discretion, may take into account factual information contained in untimely comments'' in its place;

f. Paragraph (a)(6) is amended by removing ''apprise'' from the first sentence and adding ''inform'' in its place, by removing ''routinely'' from the second sentence, removing ''commentor's'' from the last sentence and adding ''provider's'' in its place, and by removing ''on a particular application'' from the last sentence;

g. Paragraph (a)(7) is removed;

h. Paragraph (b) is revised;

i. Paragraph (c)(2), is amended by removing the word ''the'' between ''to'' and ''appropriate'' and by removing ''written'';

j. Paragraph (c)(3) is amended by removing the first sentence, by removing ''may'' from the second sentence, and by removing ''National Bureau of Standards'' and adding ''National Institute of Standards and Technology'' in its place in the second sentence;

k. Paragraph (d)(1)(i) is amended by removing ''combines'' from the fourth sentence and adding ''brings together'' in its place, and by removing ''instrument(s)'' in the last sentence and adding ''instrument'' in its place;

l. Paragraph (d)(1)(ii) is amended by removing ''conversion'' from the last sentence and adding ''adaptation'' in its place, and by removing ''for such programs'' from the last sentence;

m. Add a paragraph (d)(5); and

n. Revise paragraphs (e) introductory text, (e)(2) and (e)(3); add a sentence to the end of paragraph (e)(5); and remove paragraph (e)(9).

§ 301.5 Processing of applications by the Department of Commerce.

* * * * *

(b) *Additions to the record.* The Director may solicit from the applicant, from foreign or domestic manufacturers, their agents, or any other person or Government agency considered by the Director to have related competence, any additional information the Director considers necessary to make a decision. The Director may attach conditions and time limitations upon the provision of such information and may draw appropriate inferences from a person's failure to provide the requested information.

* * * * *

(d) * * *

(5) Processing of applications for components. (i) The Director may process an application for components which are to be assembled in the United States into an instrument or apparatus which, due to its size, cannot be imported in its assembled state (see § 301.2(k)) as if it were an application for the assembled instrument. A finding by the Director that no equivalent instrument is being manufactured in the United States shall, subject to paragraph (d)(5)(ii) of this section, qualify all the associated components, provided they are entered within the period established by the Director, taking into account both the scientific needs of the importing institution and the potential for development of related domestic manufacturing capacity.

(ii) Notwithstanding a finding under paragraph (d)(5)(i) of this section that no equivalent instrument is being manufactured in the United States, the Director shall disqualify a particular component for duty-free treatment if the Director finds that the component is being manufactured in the United States.

(e) *Denial without prejudice to resubmission (DWOP).* The Director may, at any stage in the processing of an application by the Department of Commerce, DWOP an application if it contains any deficiency which, in the Director's judgment, prevents a determination on its merits. The Director shall state the deficiencies of the application in the DWOP letter to the applicant.

* * * * *

(2) If granted, extensions of time will generally be limited to 30 days.

(3) Resubmissions must reference the application number of the earlier submission. The resubmission may be made by letter to the Director. The record of a resubmitted application shall include the original submission on file with the Department. Any new material or information contained in a resubmission, which should address the specific deficiencies cited in the DWOP letter, should be clearly labeled and referenced to the applicable question on the application form. The resubmission must be for the instrument covered by the original application unless the DWOP letter specifies to the contrary. The resubmission shall be subject to the certification made on the original application.

* * * * *

(5) * * * Resubmission by fax, e-mail or other electronic means is acceptable provided an appropriate return number or address is provided in the transmittal. Resubmissions must clearly indicate the date of transmittal to the Director.

8. Amend § 301.6 by revising paragraphs (a) and (c) to read as follows:

§ 301.6 Appeals.

(a) An appeal from a final decision made by the Director under § 301.5(f) may be taken in accordance with U.S. Note 6(e), Subchapter X, Chapter 98, HTSUS, only to the U.S. Court of Appeals for the Federal Circuit and only on questions of law, within 20 days after publication of the decision in the **Federal Register**. If at any time while its application is under consideration by the Court of Appeals on an appeal from a finding by the Director an institution cancels an order for the instrument to which the application relates or ceases to have a firm intention to order such instrument, the institution shall promptly notify the court.

* * * * *

(c) Questions regarding appeal procedures should be addressed directly to the U.S. Court of Appeals for the Federal Circuit, Clerk's Office, Washington, DC 20439.

§ 301.7 [Amended]

9. Amend § 301.7 by removing ''(see § 301.6(a))'' from the first sentence of paragraph (a).

10. Amend § 301.8 as follows:

a. Amend paragraph (a)(1) by adding ''(as defined in 19 CFR 101.1)'' after ''Customs territory of the United States'';

b. Amend the second sentence of paragraph (a)(5) by adding the words ''either by delaying importation or by placing the instrument in a bonded warehouse or foreign trade zone,'' after the words ''duty-free entry of the instrument,'';

c. Amend paragraph (b) by removing ''above'' and ''mentioned'' from the first sentence;

d. Amend paragraph (c) by removing ''of § 301.8'' in the first sentence and adding a comma after ''provisions'';

e. Revise paragraph (d) to read as follows:

§ 301.8 Instructions for entering instruments through U.S. Customs under subheading 9810.00.60, HTSUS.

* * * * *

(d) *Payment of duties.* The importer of record will be billed for payment of duties when Customs determines that such payment is due. If a refund of a deposit made pursuant to paragraph (a)(4) of this section is due, the importer should contact Customs officials at the port of entry, not the Department of Commerce.

§ 301.9 [Amended]

11. Amend § 301.9 by removing ''latter'' from the first sentence of the introductory text of paragraph (a) and adding ''receiving'' in its place.

12. § 301.10 is revised to read as follows:

§ 301.10 Importation of repair components and maintenance tools under HTSUS subheadings 9810.00.65 and 9810.00.67 for instruments previously the subject of an entry liquidated under subheading 9810.00.60, HTSUS.

(a) An institution owning an instrument that was the subject of an entry liquidated duty-free under subheading 9810.00.60, HTSUS, that wishes to enter repair components or maintenance tools for that instrument may do so without regard to the application procedures required for entry under subheading 9810.00.60, HTSUS. The institution must certify to Customs officials at the port of entry that such components are repair components for that instrument under subheading 9810.00.65, HTSUS, or that the tools are maintenance tools necessary for the repair, checking, gauging or maintenance of that instrument under subheading 9810.00.67, HTSUS.

(b) Instruments entered under subheading 9810.00.60, HTSUS, and subsequently returned to the foreign manufacturer for repair, replacement or modification are not covered by subheading 9810.00.65 or 9810.00.67, HTSUS, although they may, upon return to the United States, be eligible for a reduced duty payment under subheading 9802.00.40 or 9802.00.50, HTSUS (covering articles exported for repairs or alterations) or may be made the subject of a new application under subheading 9810.00.60, HTSUS.

Robert S. LaRussa,

Assistant Secretary for Import Administration.

Raymond W. Kelly,

Commissioner of Customs.

Dated: May 3, 2000.

John P. Simpson,

Deputy Assistant Secretary of the Treasury.

[FR Doc. 00–11734 Filed 5–11–00; 8:45 am]

BILLING CODES 3510–DS–P; 4820–02–P

FEDERAL COMMUNICATIONS COMMISSION

47 CFR Part 73

[DA No. 00–916, MM Docket No. 00–69, RM–9850]

Radio Broadcasting Services; Cheboygan and Rogers City, MI

AGENCY: Federal Communications Commission.

ACTION: Proposed rule.

SUMMARY: This document requests comments on a petition filed by Escanaba License Corp. proposing the allotment of Channel 260C2 at Cheboygan, Michigan. The coordinates for Channel 260C2 at Cheboygan are 45–33–53 and 84–07–54. There is a site restriction 28.7 kilometers (17.8 miles) east of the community. To accommodate the new allotment at Cheboygan, we shall also propose to substitute Channel 292C2 for Channel 260C2 at Rogers City, Michigan, and modification of the license for Station WHAK to specify operation on Channel 292C2. The coordinates for Channel 292C2 at Rogers City are 45–23–53 and 83–55–19. Canadian concurrence will be requested for the allotments at Cheboygan and Rogers City, Michigan.

DATES: Comments must be filed on or before June 16, 2000, and reply comments on or before July 3, 2000.

ADDRESSES: Federal Communications Commission, Washington, DC 20554. In addition to filing comments with the FCC, interested parties should serve the petitioner, as follows: Lyle Robert Evans, President, Escanaba License Corp., 1101 Ludington Street, Escanaba, Michigan 49829.

FOR FURTHER INFORMATION CONTACT: Kathleen Scheuerle, Mass Media Bureau, (202) 418–2180.

SUPPLEMENTARY INFORMATION: This is a summary of the Commission's Notice of Proposed Rule Making, MM Docket No. 00–69, adopted April 12, 2000, and released April 25, 2000. The full text of this Commission decision is available for inspection and copying during normal business hours in the Commission's Reference Center, Washington, DC. The complete text of this decision may also be purchased from the Commission's copy contractors, International Transcription Services, Inc., 1231 20th Street, NW., Washington, DC 20036, (202) 857–3800, facsimile (202) 857–3805.

Provisions of the Regulatory Flexibility Act of 1980 do not apply to this proceeding.

Members of the public should note that from the time a Notice of Proposed Rule Making is issued until the matter is no longer subject to Commission consideration or court review, all *ex parte* contacts are prohibited in Commission proceedings, such as this one, which involve channel allotments. See 47 CFR 1.1204(b) for rules governing permissible *ex parte* contact.

For information regarding proper filing procedures for comments, see 47 CFR 1.415 and 1.420.

List of Subjects in 47 CFR Part 73

Radio broadcasting.

Federal Communications Commission.

John A. Karousos,

Chief, Allocations Branch, Policy and Rules Division, Mass Media Bureau.

[FR Doc. 00–11912 Filed 5–11–00; 8:45 am]

BILLING CODE 6712–01–P

DEPARTMENT OF COMMERCE

National Oceanic and Atmospheric Administration

50 CFR Part 679

[I.D. 050500A]

RIN 0648–AK74

Fisheries of the Exclusive Economic Zone Off Alaska; Prohibition of Groundfish Fishing and Anchoring in the Sitka Pinnacles Marine Reserve

AGENCY: National Marine Fisheries Service (NMFS), National Oceanic and Atmospheric Administration (NOAA), Commerce.

ACTION: Notice of availability; request for comments.

SUMMARY: The North Pacific Fishery Management Council (Council) has submitted Amendment 59 to the Fishery Management Plan for Groundfish of the Gulf of Alaska (FMP). This amendment would prohibit vessels holding a Federal fisheries permit from fishing for groundfish or anchoring in the proposed Sitka Pinnacles Marine Reserve, a 2.5-square nautical mile (nm) area near Cape Edgecumbe. Amendment 59 is necessary to allow this area to function more fully as a marine refuge and would complement State regulations. The prohibition of boat anchoring by vessels under Federal jurisdiction would help prevent degradation of this fragile habitat.

DATES: Comments on Amendment 59 must be submitted by July 11, 2000.

ADDRESSES: Comments should be submitted to Sue Salveson, Assistant Regional Administrator, Sustainable Fisheries Division, Alaska Region, NMFS, P.O. Box 21668, Juneau, AK 99802, Attn: Lori Gravel. Comments may also be sent via facsimile (fax) to 907–586–7465, or hand delivered or sent by courier to the Federal Building, Room 453, Juneau, AK. Comments will not be accepted if submitted via e-mail or the Internet.

Copies of Amendment 59 to the FMP and the Environmental Assessment/Regulatory Impact Review/Initial Flexibility Analysis prepared for the amendment are available from the North Pacific Fishery Management Council, 605 West 4th Avenue, Suite 306, Anchorage, AK 99501–2252; telephone 907–271–2809.

FOR FURTHER INFORMATION CONTACT: Nina Mollett, 907–586–7462, nina.mollett@noaa.gov.

SUPPLEMENTARY INFORMATION: The Council adopted Amendment 59 to the FMP at its June 1998 meeting pursuant to the Magnuson-Stevens Fishery Conservation and Management Act (Magnuson-Stevens Act). If approved by NMFS, this amendment would prohibit vessels holding a Federal fisheries permit from fishing for groundfish or anchoring in the Sitka Pinnacles Marine Reserve, a 2.5-square nm area of unusually productive and fragile habitat near Cape Edgecumbe. In addition, the amendment would prohibit fishing for halibut or anchoring in the area by vessels required to have on board an individual fishing quota (IFQ) halibut permit under § 679.4(b). In addition, the area would be closed to sport fishing for halibut as defined at § 300.61, or anchoring by vessels having halibut on board. The International Pacific Halibut Commission manages Pacific halibut pursuant to the Northern Pacific Halibut Act.

The proposed Sitka Pinnacles Marine Reserve provides habitat for a variety of species at different life stages. Large numbers of juvenile and adult rockfish find shelter and protection among the sea plants and invertebrates growing on the rock walls. Closure of this area would protect the fragile ecosystem in the pinnacles. It would prevent the harvest or bycatch of species using the pinnacles during critical portions of their life histories, and would allow a vital ecosystem to maintain natural population levels in an area surrounded by heavy fishing pressure.

The Magnuson-Stevens Act requires that each Regional Fishery Management Council submit any fishery management plan or fishery management plan amendment it prepares to NMFS for review and approval, disapproval, or partial approval. The Magnuson-Stevens Act also requires that NMFS, upon receiving a fishery management plan or amendment, immediately publish a notification in the **Federal Register** that the amendment is available for public review and comment. This action constitutes such notice for FMP Amendment 59. NMFS will consider the public comments received during the comment period in determining whether to approve Amendment 59. To be considered, a comment must be received by close of business on the last day of the comment period (see **DATES**), regardless of the comment's postmark or transmission date. A proposed rule that would implement the amendment may be published in the **Federal Register** for public comment following NMFS' evaluation under the Magnuson-Stevens Act procedures. Public comments on the proposed rule must be received by the end of the comment period on the amendment in order to be considered in the approval/disapproval decision on the amendment. All comments received by the end of the comment period on the amendment, whether specifically directed to the amendment or to the proposed rule, will be considered in the approval/disapproval decision; comments received after that date will not be considered in the approval/disapproval decision on the amendment.

Dated: May 8, 2000.

Bruce C. Morehead,

Acting Director, Office of Sustainable Fisheries, National Marine Fisheries Service.

[FR Doc. 00–12027 Filed 5–11–00; 8:45 am]

BILLING CODE 3510–22–F

Notices

Federal Register
Vol. 65, No. 93
Friday, May 12, 2000

This section of the FEDERAL REGISTER contains documents other than rules or proposed rules that are applicable to the public. Notices of hearings and investigations, committee meetings, agency decisions and rulings, delegations of authority, filing of petitions and applications and agency statements of organization and functions are examples of documents appearing in this section.

DEPARTMENT OF AGRICULTURE

Submission for OMB Review; Comment Request

May 8, 2000.

The Department of Agriculture has submitted the following information collection requirement(s) to OMB for review and clearance under the Paperwork Reduction Act of 1995, Public Law 104–13. Comments regarding (a) whether the collection of information is necessary for the proper performance of the functions of the agency, including whether the information will have practical utility; (b) the accuracy of the agency's estimate of burden including the validity of the methodology and assumptions used; (c) ways to enhance the quality, utility and clarity of the information to be collected; (d) ways to minimize the burden of the collection of information on those who are to respond, including through the use of appropriate automated, electronic, mechanical, or other technological collection techniques or other forms of information technology should be addressed to: Desk Officer for Agriculture, Office of Information and Regulatory Affairs, Office of Management and Budget (OMB), Washington, DC 20503 *and* to Departmental Clearance Office, USDA, OCIO, Mail Stop 7602, Washington, DC 20250–7602. Comments regarding these information collections are best assured of having their full effect if received within 30 days of this notification. Copies of the submission(s) may be obtained by calling (202) 720–6746.

An agency may not conduct or sponsor a collection of information unless the collection of information displays a currently valid OMB control number and the agency informs potential persons who are to respond to the collection of information that such persons are not required to respond to the collection of information unless it displays a currently valid OMB control number.

Food and Nutrition Service

Title: FNS Nutrition Education and Promotion Campaign.

OMB Control Number: 0584–NEW.

Summary of Collection: The mission of FNS includes improving the eating habits of the nation's children. To that end, FNS plans to launch a five-year national nutrition education and promotion campaign targeting preschool and school-aged children and their caregivers. Section 6(a)(3) of the Richard B. Russell National School Lunch Act provides the authority for educating USDA School Lunch Program participants about nutrition. The campaign will employ social marketing techniques to convey motivational and behavior-focused messages about healthy eating and physical activity to FNS program participants. FNS will collect information using focus group discussion sessions and semi-structured interviews.

Need and Use of the Information: The information collected will provide FNS with insights on how best to reach and motivate preschool and school-aged children and their caregivers to make behavioral changes consistent with the new Dietary Guidelines for Americans. The information will be used to determine those messages and materials that best resonate with the target audience. If information is not collected, valuable consumer input from FNS' culturally and ethnically diverse low-income population would not be obtained.

Description of Respondents: Individuals or household; Not-for-profit institutions; Federal Government; State, Local, or Tribal Government.

Number of Respondents: 288.

Frequency of Responses: Reporting: Other (One-time/Focus Groups).

Total Burden Hours: 293.

Farm Service Agency

Title: Noninsured Crop Disaster Assistance Program.

OMB Control Number: 0560–0175.

Summary of Collection: The collection of crop planting and production data is necessary for the Commodity Credit Corporation (CCC) to calculate the producer's approved yield on the basis of actual production history. Information collection relative to the occurrence of crop damage or loss production and application for Noninsured Crop Disaster Assistance Program (NAP) is necessary for CCC to accept and consider a request for assistance under NAP and to facilitate eligibility determinations. Assistance under the NAP is authorized by Section 196 of the Federal Agriculture Improvement and Reform Act of 1996 and implemented by regulations at 7 CFR part 1437. NAP provides eligible producers of eligible crops with protection to the catastrophic risk protection plan of crop insurance. It helps reduce production risks faced by producers of crops for which Federal crop insurance is not available. It also reduces financial losses that occur when natural disasters cause a catastrophic loss of production or prevented planting of an eligible crop. The Farm Service Agency (FSA) will collect information using forms CCC–451, CCC–576, CCC–441, CCC–576–1 and CCC–452.

Need and Use of the Information: FSA will collect the producer's name, address, identification number, farm and tract, acreage, ownership, location, crop history, planted acreage, production, yield, share, etc. The information will be used to identify eligible NAP participants, acreage and location, crop and commodities. If information is not collected FSA will not be able to identify and determine eligible participants and crops being planted or produced, or provide assistance to agricultural producers who as a result of natural disaster have suffered catastrophic losses of agricultural crops of commodities.

Description of Respondents: Individuals or household; Business or other for-profit; Not-for-profit institutions; Farms.

Number of Respondents: 497,000.

Frequency of Responses: Recordkeeping; Reporting: On occasion; Other (disaster).

Total Burden Hours: 4,605,088.

Foreign Agricultural Service

Title: Declaration of Sale.

OMB Control Number: 0551–0009.

Summary of Collection: Title I of the Agricultural Trade Development and Assistance Act of 1954, as amended, (Public Law 480 (P.L. 480), 83rd Congress) provides for U.S. government financing of sales of U.S. agricultural commodities to friendly foreign countries. Within the U.S. government, the Foreign Agricultural Service (FAS)

of the Department of Agriculture (USDA) is responsible for administering Title I agreements. After a Pub. L. 480, Title I agreement is signed, the government of the importing country requests FAS to issue a purchase authorization (PA). After receiving USDA price approval (based on the information provided in the telephonic notice of sale) and after a Commodity Credit Corporation (CCC) registration number for the sale has been provided to the supplier, the supplier prepares Form FAS–359, ''Declaration of Sale'' and submits it to FAS. The form should contain the same information that was provided in the telephonic notice of sale.

Need and Use of the Information: FAS will collect the name and address of the supplier, date and time of the sale, contract quantity and tolerance, delivery period and terms, price, commodity description, port or coast of export and supplier's contract number.

Description of Respondents: Business or other for-profit.

Number of Respondents: 15.

Frequency of Responses: Reporting: On occasion.

Total Burden Hours: 22.25.

Foreign Agricultural Service

Title: Regulations—Financing Commercial Sales of Agricultural Commodities Under Title I, P.L. 480—Recordkeeping and Reporting Requirements

OMB Control Number: 0551–0005.

Summary of Collection: Title I of the Agricultural Trade Development and Assistance Act of 1954, as amended, (Public Law 480 (P.L. 480), 83rd Congress) authorizes the Commodity Credit Corporation (CCC) to finance the sale and exportation of agricultural commodities on concessional credit terms. Prospect commodity suppliers must provide information to the Department to determine eligibility. Commodity supplier must report details of sales for price approval and to submit to USDA, Foreign Agricultural Services (FAS), for approval, information on any amendments to the sales. Shipping agents nominated by importing countries must submit information to allow identification of possible conflicts of interest.

Need and Use of the Information: FAS will collect information to insure that (1) suppliers keep accurate records on Title 1 transactions; (2) suppliers permit access to authorized USDA representatives (such as auditors and investigators); and, (3) suppliers retain records for three years after final payment. FAS will review the sales prices to ensure that it is within the prevailing range of export market prices use the information. If the information were not collected FAS would not be able to monitor the sales made under P.L. 480, Title I to ensure that they comply with the regulations and that available funds have not been exceeded.

Description of Respondents: Business or other for-profit.

Number of Respondents: 65.

Frequency of Responses: Recordkeeping; Reporting: On occasion.

Totla Burden Hours: 423.

Agricultural Marketing Service

Title: Winter Pears Grown in Oregon, Washington, and California, marketing Order No. 927.

OMB Control Number: 0581–0089.

Summary of Collection: Marketing Order No 927 (7 CFR Part 927), covering winter pears grown in Oregon, Washington, and California emanates from enabling legislation (the Agricultural Marketing Agreement Act of 1937, Secs, 1–19 Stat. 31 as amended; 7 U.S.C. 601–674). Growers approved the marketing order in referendum, as specified by the Act. The order authorizes the issuance of grade, size, quantity, inspection, and reporting requirements for any variety of winter pears. The Agricultural Marketing Service (AMS) will collect information using form FV–22, FB–119, FV–119A, and FV–120.

Needs and use of the Information: AMS will collect information to allow growers to vote on amendments or continuance of the marketing order.

Description Of Respondents: Business or other for-profit; Farms.

Number of Respondents: 1,890.

Frequency of Responses: Recordkeeping; Reporting: On occasion; Biennially.

Total Burden Hours: 3,567.

Rural Utilities Service

Title: Certification of Authority.

OMB Control Number: 0572–0074.

Summary of Collection: The Rural Utilities Service (RUS) is a credit agency of the U.S. Department of Agriculture (USDA). It makes mortgage loans and loan guarantees to finance electric, telecommunications, and water and waste facilities in rural areas. Rural Electrification Act of 1936, 7 U.S.C. 901 *et seq.,* as amended, (RE ACT) and as prescribed by Office of Management and Budget (OMB) Circular A–129, Policies for Federal Credit Programs and Non-Tax Receivables, which states that agencies must, based on a review of a loan application, determine that an applicant complies with statutory, regulatory, and administrative eligibility requirements for loan assistance. A major factor in managing loan programs is controlling the advancement of funds. RUS Form 675 allows this control to be achieved by providing a list of authorized signatures against which signatures requesting funds are compared.

Need and Use of the Information: RUS will collect information to ensure that only authorized representatives of the borrowers signs the lending requisition form. Without the information RUS would not know if the request for a loan advance was legitimate or not and so the potential for waste, loss, unauthorized use, and misappropriation would be increased.

Description of Respondents: Not-for-profit institutions; Business or other for-profit.

Number of Respondents: 450.

Frequency of Responses: Reporting: On occasion.

Total Burden Hours: 45.

Natural Resources Conservation Service

Title: Long Term Contracting.

OMB Control Number: 0578–0013.

Summary of Collection: The Long Term Contracting regulations at 7 CFR Part 630, and the Conservation program regulations at 7 CFR Parts 622, 624, 631, 632, 634, 636, 701, 702, 752, 1410, and 1467 set forth the basic policies, program provisions, and eligibility requirements for owners and opertors to enter into and carry out long-term conservation program contracts with technical assistance under the various program. These programs authorize federal technical and financial long-term cost sharing assistance for conservation treatment with eligible land users. The financial assistance is based on a conservation plan, which is made a part of an agreement or contract for a period of not less than five years to not more than 15 years. Under the terms of the agreement, the participant agrees to apply, or arrange to apply, the conservation treatment specified in the conservation plan. In return for this agreement, federal cost-share payments are made to the land user, or third party, upon successful application of the conservation treatment. The Natural Resource and Conservation Service (NRCS) will collect information using several NRCS forms.

Need and Use of the Information: NRCS will collect information on cost sharing and technical assistance, making land use changes and install measure to conserve, develop and utilize soil, water, and related natural resources on participant's land. NRCS uses the information to ensure the proper utilization of program funds.

Description of Respondents: Farms; Individuals or households; Not-for-profit institutions; State, Local or Tribal Government.

Number of Respondents: 198,517.

Frequency of Responses: Reporting: Annually.

Total Burden Hours: 162,388.8.

Barbara LaCour,

Departmental Clearance Officer.

[FR Doc. 00–11923 Filed 5–11–00; 8:45 am]

BILLING CODE 3410–01–M

DEPARTMENT OF AGRICULTURE

Forest Service

Newspapers Used for Publication of Legal Notice of Appealable Decisions for the Northern Region; Idaho, Montana, North Dakota, and Portions of South Dakota and Eastern Washington.

AGENCY: Forest Service, USDA.

ACTION: Notice.

SUMMARY: This notice lists the newspapers that will be used by all Ranger Districts, Forests, and the Regional Office of the Northern Region to publish legal notice of all decisions subject to appeal under 36 CFR 215 and 217 and to publish notices for public comment and notice of decision subject to the provisions of 36 CFR 215 and 217 and to publish notices for public comment and notice of decision subject to the provisions of 36 CFR 215. The intended effect of this action is to inform interested members of the public which newspapers will be used to publish legal notices for public comment or decisions; thereby allowing them to receive constructive notice of a decision, to provide clear evidence of timely notice, and to achieve consistency in administering the appeals process.

DATES: Publication of legal notices in the listed newspapers will begin with decisions subject to appeal that are made on or after May 15, 2000. The list of newspapers will remain in effect until another notice is published in the **Federal Register**.

FOR FURTHER INFORMATION CONTACT: Interregional NEPA, Appeals and Litigation Leader; Northern Region; P.O. Box 7669; Missoula, Montana 59807. Phone: (406) 329–3647.

The newspapers to be used are as follows:

Northern Regional Office

Regional Forester decisions in Montana: The Missoulian, Great Falls Tribune, and The Billings Gazette.

Regional Forester decisions in Northern Idaho and Eastern Washington: The Spokesman Review.

Regional Forester decisions in North Dakota: Bismarck Tribune.

Regional Forester decisions in South Dakota: Rapid City Journal.

Beaverhead/Deerlodge—Montana Standard.

Bitterroot—Ravalli Republic.

Clearwater—Lewiston Morning Tribune.

Custer—Billings Gazette (Montana) Rapid City Journal (South Dakota).

Dakota Prairie National Grasslands—Bismarck Tribune (North Dakota) Rapid City Journal (South Dakota).

Flathead—Daily Interlake.

Gallatin—Bozeman Chronicle.

Helena—Independent Record.

Idaho Panhandle—Spokesman Review.

Kootenai—Daily Interlake.

Lewis & Clark—Great Falls Tribune.

Lolo—Missoulian.

Nez Perce—Lewiston Morning Tribune.

Supplemental notices may be placed in any newspaper, but time frames/deadlines will be calculated based upon notices in newspapers of record listed above.

Dated: May 7, 2000.

Kathleen A. McAllister,

Deputy Regional Forester.

[FR Doc. 00–11946 Filed 5–11–00; 8:45 am]

BILLING CODE 3410–11–M

COMMITTEE FOR PURCHASE FROM PEOPLE WHO ARE BLIND OR SEVERELY DISABLED

Procurement List; Proposed Additions

AGENCY: Committee for Purchase From People Who Are Blind or Severely Disabled.

ACTION: Proposed additions to Procurement List.

SUMMARY: The Committee has received proposals to add to the Procurement List commodities and services to be furnished by nonprofit agencies employing persons who are blind or have other severe disabilities.

COMMENTS MUST BE RECEIVED ON OR BEFORE: June 12, 2000.

ADDRESSES: Committee for Purchase From People Who Are Blind or Severely Disabled, Crystal Gateway 3, Suite 310, 1215 Jefferson Davis Highway, Arlington, Virginia 22202–4302.

FOR FURTHER INFORMATION CONTACT: Louis R. Bartalot, (703) 603–7740.

SUPPLEMENTARY INFORMATION: This notice is published pursuant to 41 U.S.C. 47(a)(2) and 41 CFR 51–2.3. Its purpose is to provide interested persons an opportunity to submit comments on the possible impact of the proposed actions.

If the Committee approves the proposed additions, all entities of the Federal Government (except as otherwise indicated) will be required to procure the commodities and services listed below from nonprofit agencies employing persons who are blind or have other severe disabilities.

I certify that the following action will not have a significant impact on a substantial number of small entities. The major factors considered for this certification were:

1. The action will not result in any additional reporting, recordkeeping or other compliance requirements for small entities other than the small organizations that will furnish the commodities and services to the Government.

2. The action will result in authorizing small entities to furnish the commodities and services to the Government.

3. There are no known regulatory alternatives which would accomplish the objectives of the Javits-Wagner-O'Day Act (41 U.S.C. 46–48c) in connection with the commodities and services proposed for addition to the Procurement List. Comments on this certification are invited. Commenters should identify the statement(s) underlying the certification on which they are providing additional information.

The following commodities and services have been proposed for addition to Procurement List for production by the nonprofit agencies listed:

Commodities

American Flag
M.R. 1011
NPA: Chester County Branch of the PAB, Coatesville, Pennsylvania

Mailers, Audio Cassette
8105–01–386–2181
8105–01–386–2189
NPA: York County Blind Center, York, Pennsylvania

Marine Security Guard Accessories
8465–00–NIB–0047
8465–00–NIB–0048
8465–00–NIB–0049
8465–00–NIB–0050
8465–00–NIB–0051
8465–00–NIB–0052
8465–00–NIB–0053
8465–00–NIB–0054
NPA: Industries of the Blind, Inc., Greensboro, North Carolina

Skin Protectant Plus, Effective Prevention
9999–00–NSH–0001
9999–00–NSH–0002

9999–00–NSH–0003
NPA: ACT Corp., Daytona Beach, Florida

Services

Grounds Maintenance, Playground Areas, Camp Lejeune, North Carolina
NPA: Coastal Enterprises of Jacksonville, Inc., Jacksonville, North Carolina

Janitorial/Custodial, Sandra Day O'Connor Federal Building, 401 West Washington Street, Phoenix, Arizona
NPA: Goodwill Community Services, Inc., Phoenix, Arizona

Janitorial/Custodial, U.S. Coast Guard, Elizabeth City, North Carolina
NPA: Skills Inc., Hertford, North Carolina

Publication File Maintenance for National Environmental Publications, Internet Site (NEPIS) Website, Environmental Protection Agency, Cincinnati, Ohio
NPA: The Clovernook Center, Opportunities f/t Blind, Cincinnati, Ohio

Leon A. Wilson, Jr.,

Executive Director.

[FR Doc. 00–11993 Filed 5–11–00; 8:45 am]

BILLING CODE 6353–01–P

COMMITTEE FOR PURCHASE FROM PEOPLE WHO ARE BLIND OR SEVERELY DISABLED

Procurement List; Additions

AGENCY: Committee for Purchase From People Who Are Blind or Severely Disabled.

ACTION: Additions to the Procurement List.

SUMMARY: This action adds to the Procurement List commodities and services to be furnished by nonprofit agencies employing persons who are blind or have other severe disabilities.

EFFECTIVE DATE: June 12, 2000.

ADDRESS: Committee for Purchase From People Who Are Blind or Severely Disabled, Crystal Gateway 3, Suite 310, 1215 Jefferson Davis Highway, Arlington, Virginia 22202–4302.

FOR FURTHER INFORMATION CONTACT: Louis R. Bartalot (703) 603–7740.

SUPPLEMENTARY INFORMATION: On October 8, 1999, February 4, and March 3, 17, 24, and 31, 2000, the Committee for Purchase From People Who Are Blind or Severely Disabled published notices (64 FR 54862 and 65 FR 5492, 11548, 14532, 15897, and 17255) of proposed additions to the Procurement List. After consideration of the material presented to it concerning capability of qualified nonprofit agencies to provide the commodities and services and impact of the additions on the current or most recent contractors, the Committee has determined that the commodities and services listed below are suitable for procurement by the Federal Government under 41 U.S.C. 46–48c and 41 CFR 51–2.4.

I certify that the following action will not have a significant impact on a substantial number of small entities. The major factors considered for this certification were:

1. The action will not result in any additional reporting, recordkeeping or other compliance requirements for small entities other than the small organizations that will furnish the commodities and services to the Government.

2. The action will not have a severe economic impact on current contractors for the commodities and services.

3. The action will result in authorizing small entities to furnish the commodities and services to the Government.

4. There are no known regulatory alternatives which would accomplish the objectives of the Javits-Wagner-O'Day Act (41 U.S.C. 46–48c) in connection with the commodities and services proposed for addition to the Procurement List.

Accordingly, the following commodities and services are hereby added to the Procurement List:

Commodities

Fossfill® Pillows

M.R. 770 (Standard Pillow)
M.R. 771 (Queen Pillow)
M.R. 772 (King Pillow)

First Aid Kit, Small Craft
6545–01–168–6893

First Aid Kit, Gun Crew
6545–00–920–7125

Medical Equipment Set, Ground Ambulance
6545–01–141–9476

Medical Equipment Set, Laboratory, Field
6545–01–191–8970

Medical Equipment Set, Trauma, Field
6545–01–191–8972

Medical Equipment Set, X-Ray, Field
6545–01–191–8971

Services

Acquisition & Distribution of AA-Cell Batteries, Tier AD
6135–00–643–1309
Defense Supply Center—Richmond
Richmond, Virginia

Base Supply Center, Operation of Individual Equipment Element Store and HAZMART
Little Rock Air Force Base, Arkansas

Eyewear Prescription Service at the following locations:

Department of Veterans Administration Medical Center Outpatient Clinic
3510 Augusta Road, Greenville, South Carolina

Department of Veterans Affairs Medical Center
6439 Garners Ferry Road, Columbia, South Carolina

Janitorial/Custodial for the following locations in Pasadena, California:

U.S. Court of Appeals
125 South Grand Avenue

Social Security Administration Building
104 Mentor Street

Janitorial/Custodial
Bureau of Reclamation, Farmington Construction Office (FCO), 2200 Bloomfield Highway, Farmington, New Mexico

Janitorial/Custodial
Veterans Affairs Outpatient Clinic, 3420 Veterans Circle, Beaumont, Texas

Janitorial/Custodial
U.S. Immigration & Naturalization Service, Institutional Hearing Program, 7405CI Highway 75 South, Huntsville, Texas

Janitorial/Custodial
Naval and Marine Corps Reserve Center, Fort Douglas, 116 Pollock Road, Salt Lake City, Utah

Janitorial/Grounds Maintenance
Federal Courthouse, Pocatello, Idaho

Operation of Individual Equipment Element Store
Eielson Air Force Base, Alaska

This action does not affect current contracts awarded prior to the effective date of this addition or options that may be exercised under those contracts.

Leon A. Wilson, Jr.,

Executive Director.

[FR Doc. 00–11994 Filed 5–11–00; 8:45 am]

BILLING CODE 6353–01–P

DEPARTMENT OF COMMERCE

[I.D. 050800LE]

Submission for OMB Review; Proposed Information Collection; Comment Request

DOC has submitted to the Office of Management and Budget (OMB) for clearance the following proposal for collection of information under the provisions of the Paperwork Reduction Act (44 U.S.C. Chapter 35).

Agency: National Oceanic and Atmospheric Administration.

Title: Scientific Research, Public Display, and Enhancement Permits Under the Marine Mammal Protection Act, the Fur Seal Act and the Endangered Species Act.

Agency Form Number(s): None.

OMB Approval Number: 0648–0084.

Type of Request: Reinstatement, without change, of a previously approved collection.

Burden: 6,165 hours.

Number of Respondents: 461.

Average Hours Per Response:**4 minutes to 20 hours depending on the requirement**.

Needs and Uses: The Marine Mammal Protection Act, the Fur Seal Act of 1966, and the Endangered Species Act of 1973 mandate the protection and

conservation of marine mammals and other protected species/parts/products, and prohibit the taking, importation, and export of protected species except under certain circumstances. Exemptions for scientific research, enhancement, photography for educational or commercial purposes, public display, and certain other limited purposes are allowed provided permits are applied for and received or other necessary authorization is obtained.

Affected Public: Individuals or households, businesses or other for-profit organizations, not-for-profit institutions, Federal, state, local or tribal governments.

Frequency: Annually.

Respondent's Obligation: Mandatory.

OMB Desk Officer: David Rostker, (202) 395–3897.

Copies of the above information collection proposal can be obtained by calling or writing Linda Engelmeier, DOC Forms Clearance Officer, (202) 482–3272, Department of Commerce, Room 5027, 14th and Constitution Avenue, NW, Washington, DC 20230 (or via the Internet at lengelme@doc.gov).

Written comments and recommendations for the proposed information collection should be sent within 30 days of publication of this notice to David Rostker, OMB Desk Officer, Room 10202, New Executive Office Building, Washington, DC 20503.

Dated: May 4, 2000.

Gwellnar Banks,

Management Analyst, Office of the Chief Information Officer.

[FR Doc. 00–12029 Filed 5–11–00; 8:45 am]

BILLING CODE 3510–22–F

DEPARTMENT OF COMMERCE

[I.D. 050800C]

Submission for OMB Review; Proposed Information Collection; Comment Request

The Department of Commerce has submitted to the Office of Management and Budget (OMB) for clearance the following proposal for collection of information under the provisions of the Paperwork Reduction Act (44 U.S.C. Chapter 35).

Agency: National Oceanic and Atmospheric Administration (NOAA).

Title: StormReady Application Form.

Agency Form Number(s): None.

OMB Approval Number: None.

Type of Request: Emergency.

Burden Hours: 40.

Number of Respondents: 40.

Average Hours Per Response: 1.

Needs and Uses: StormReady is a community-recognition program for emergency management. The StormReady Application Form allows the National Weather Service to collect the information needed to recognize communities that are sufficiently prepared for adverse weather before an event happens.

Affected Public: State, Local, or Tribal Governments.

Frequency: On occasion, biennial.

Respondent's Obligation: Voluntary.

OMB Desk Officer: David Rostker, (202) 395-3897.

Copies of the above information collection proposal can be obtained by calling or writing Linda Engelmeier, DOC Forms Clearance Officer, (202) 482-3272, Department of Commerce, Room 5027, 14th and Constitution Avenue, NW, Washington, DC 20230 (or via the Internet at lengelme@doc.gov).

Written comments and recommendations for the proposed information collection should be sent within 30 days of publication of this notice to David Rostker, OMB Desk Officer, Room 10202, New Executive Office Building, Washington, DC 20503.

Dated: May 5, 2000.

Madeleine Clayton,

Management Analyst, Office of the Chief Information Officer.

[FR Doc. 00–12031 Filed 5–11–00; 8:45 am]

BILLING CODE 3510–KE–F

DEPARTMENT OF COMMERCE

International Trade Administration

Export Trade Certificate of Review

ACTION: Notice of issuance of an amended Export Trade Certificate of Review, Application No. 94–3A007.

SUMMARY: The Department of Commerce has issued an amended Export Trade Certificate of Review to Florida Citrus Exports, L.C. on May 8, 2000. Notice of issuance of the original Certificate was published in the **Federal Register** on March 8, 1995 (60 FR 12735).

FOR FURTHER INFORMATION CONTACT: Morton Schnabel, Director, Office of Export Trading Company Affairs, International Trade Administration, (202) 482–5131, oetca@ita.doc.gov. This is not a toll-free number.

SUPPLEMENTARY INFORMATION: Title III of the Export Trading Company Act of 1982 (15 U.S.C. 4001–21) authorizes the Secretary of Commerce to issue Export Trade Certificates of Review. The regulations implementing Title III are found at 15 CFR part 325 (1998).

The Office of Export Trading Company Affairs (''OETCA'') is issuing this notice pursuant to 15 CFR 325.6(b), which requires the Department of Commerce to publish a summary of a Certificate in the **Federal Register**. Under Section 305(a) of the Act and 15 CFR 325.11(a), any person aggrieved by the Secretary's determination may, within 30 days of the date of this notice, bring an action in any appropriate district court of the United States to set aside the determination on the ground that the determination is erroneous.

Description of Amended Certificate

Export Trade Certificate of Review No. 94–0007, was issued to Florida Citrus Exports, L.C. on February 23, 1995 (60 FR 12735, March 8, 1995), and lastly amended on May 5, 1998 (63 FR 25833, May 11, 1998).

USSC's Export Trade Certificate of Review has been amended to:

1. Add the following companies as new ''Members'' of the Certificate within the meaning of § 325.2(1) of the Regulations (15 CFR 325.2(1)): Harbor Island Citrus, Inc., Vero Beach, FL (Controlling Entity: First Atlantic Citrus, Inc., Vero Beach, FL); Minton Sun, Inc., Ft. Pierce, FL (Controlling Entity: Triple M Investment Company, Ft. Pierce, FL) and Seald Sweet LLC, Vero Beach, FL and

(2) Change the listing of the name of the ''Member'' Florida Fresh Citrus Sales, Inc. to River One International Marketing, Inc.

A copy of the amended certificate will be kept in the International Trade Administration's Freedom of Information Records Inspection Facility, Room 4102, U.S. Department of Commerce, 14th Street and Constitution Avenue, NW, Washington, DC 20230.

Dated: May 8, 2000.

Morton Schnabel,

Director, Office of Export Trading Company Affairs.

[FR Doc. 00–12049 Filed 5–11–00; 8:45 am]

BILLING CODE 3510–DR–P

DEPARTMENT OF COMMERCE

International Trade Administration Business Development Trade Mission to Egypt, Kenya, and South Africa

AGENCY: International Trade Administration, Department of Commerce.

ACTION: Notice.

SUMMARY: The Department of Commerce invites U.S. companies to participate in Acting Assistant Secretary and Director General Marjory Searing's Business Development Trade Mission to Egypt, Kenya, and South Africa, October 1–7, 2000.

DATES: All applications must be received by August 4, 2000. Applications received after that date will be considered on a space available basis.

ADDRESSES: Applications may be submitted to Grace Wiggins, Department of Commerce, 14th and Constitution Avenue, N.W., Room 3810, Washington, D.C. 20230, Tel: 202–482–6482.

FOR FURTHER INFORMATION CONTACT: Grace Wiggins, Department of Commerce Tel.: 202–482–6482; Fax (202) 482–6482.

SUPPLEMENTARY INFORMATION: Acting Assistant Secretary and Director General of the U.S. and Foreign Commercial Service Marjory Searing will lead a senior-level business development trade mission, of approximately 10–15 companies, focusing on women-owned and women-managed businesses to the countries of Egypt, Kenya and South Africa. This Business Development Mission is being organized to coincide with the Global Summit of Women 2000: Africa being held in Johannesburg, South Africa on October 5–7. While the trade mission and summit focus on women-owned and/or managed companies, participation is not limited to such businesses and all interested U.S. companies are encouraged to apply. The mission will visit Cairo, Egypt; Nairobi, Kenya; and Johannesburg, South Africa with an optional stop to Cape Town, South Africa. The overall focus of the trip will be commercial opportunities for U.S. companies, presented by the continuing market liberalization and privatization happening in these countries.

Best sectors offering opportunities for American firms include but are not limited to environmental equipment and services, Telecommunications, medical and computer equipment and software, information technology, fashion and jewelry, cosmetic/hair products and security and safety equipment.

Dated: May 8, 2000.

Sherry Lewis-Khanna,

Special Assistant, Office of Domestic Operations.

[FR Doc. 00–11915 Filed 5–11–00; 8:45 am]

BILLING CODE 3510–FP–P

DEPARTMENT OF COMMERCE

National Oceanic and Atmospheric Administration

Alcoa Point Comfort/Lavaca Bay NPL Site, Point Comfort, TX: Notice of Availability and Request for Comments on a Revised Draft Damage Assessment and Restoration Plan/ Environmental Assessment for Recreational Fishing Service Losses

AGENCIES: National Oceanic and Atmospheric Administration (NOAA), Commerce; United States Department of the Interior (DOI); Texas Parks and Wildlife Department (TPWD); Texas General Land Office (TGLO); and Texas Natural Resources and Conservation Commission (TNRCC).

ACTION: Notice of availability of a Revised Draft Damage Assessment and Restoration Plan and Environmental Assessment for recreational fishing service losses associated with the Alcoa Point Comfort/Lavaca Bay National Priorities List (NPL) Site, and of a 30-day period for public comment on the plan beginning May 12, 2000.

SUMMARY: Pursuant to 43 CFR Sections 11.32 and 11.81—.82, notice is hereby given that a document entitled, ''Revised Draft Damage Assessment and Restoration Plan and Environmental Assessment for the Point Comfort/ Lavaca Bay NPL Site Recreational Fishing Service Losses'' (Revised Draft DARP/EA) is available for public review and comment. This document describes revisions to the Draft Damage Assessment and Restoration Plan and Environmental Assessment (Draft DARP/EA), which was released for public review and comment on September 28, 1999. The Draft DARP/ EA described the assessment of recreational fishing service losses attributable to hazardous substances released from the Alcoa Point Comfort/ Lavaca Bay NPL Site ('Lavaca Bay Site' or 'Site') and the restoration actions preferred to compensate for those losses. As a result of the public comments received on the Draft DARP/EA, the restoration alternatives identified to compensate for such losses have been revised. The Revised Draft DARP/EA summarizes these public comments and identifies changes to the restoration plan that were determined to be necessary in light of the comments and other information received. The Revised Draft DARP/EA is being released to allow public comment on the revised restoration alternatives now proposed for inclusion in the Final DARP/EA for the recreational fishing service losses.

DATES: Comments on the Revised Draft DARP/EA must be submitted in writing on or before June 12, 2000.

ADDRESSES: Requests for copies of the Revised Draft DARP/EA should be sent to Richard Seiler of TNRCC, MC142, P.O. Box 13087, Austin, TX 78711–3087 or Tony Penn of NOAA, 1305 East West Highway, Station 10218, Silver Spring, MD 20910. Written comments on the plan should be sent either to Richard Seiler of TNRCC or Tony Penn of NOAA at the addresses listed above.

SUPPLEMENTARY INFORMATION: The Alcoa Point Comfort/Lavaca Bay NPL Site is located in Point Comfort, Calhoun County, Texas and encompasses releases of hazardous substances from Alcoa's Point Comfort Operations facility. Between 1948 and the present, Alcoa constructed and operated several types of manufacturing processes at this facility, including aluminum smelting, carbon paste and briquette manufacturing, gas processing, chlor-alkali processing, and alumina refining. Past operations at the facility resulted in the release of hazardous substances into the environment, including the discharge of mercury-containing wastewater into Lavaca Bay from 1966 to 1970 and releases of mercury into the bay through groundwater. In April 1988, the Texas Department of Health (TDH) issued a ''closure order'' prohibiting the taking of finfish and crabs for consumption from a specific area near the facility due to elevated mercury concentrations in these resources.

The Alcoa Point Comfort/Lavaca Bay Site was added to the NPL, pursuant to Section 105 of the Comprehensive Environmental Response, Compensation and Liability Act (CERCLA), 42 U.S.C. 9601, effective on March 25, 1994 (59 FR 8724; February 23, 1994). The Site was listed primarily due to the presence of mercury in several species of fish and crab in Lavaca Bay, the fishing closure imposed by TDH, and the presence of mercury and other hazardous substances in bay sediments adjacent to the facility. Alcoa, the State of Texas and the U.S. Environmental Protection Agency (EPA) signed an Administrative Order on Consent (AOC) under CERCLA in March 1994 providing for the conduct of a remedial investigation and feasibility study (RI/FS) for the Site.

NOAA, DOI, TPWD, TGLO and TNRCC (collectively, the Trustees) are designated natural resource trustees under Section 107(f) of CERCLA, Section 311 of the Federal Water Pollution and Control Act (FWPCA), 33 U.S.C. Section 1321, and other applicable federal or state laws, including Subpart G of the National Oil

and Hazardous Substances Pollution Contingency Plan (NCP), 40 CFR Sections 300.600—300.615. The Trustees are authorized to act on behalf of the public under these authorities to protect and restore natural resources and resource services injured or lost as a result of discharges or releases of hazardous substances.

Paralleling the RI/FS process for the Site, the Trustees have undertaken an assessment of the natural resource injuries and service losses resulting from releases of hazardous substances attributable to the Site and of the restoration actions necessary to address those losses. This assessment process has been aided and supported by Alcoa's cooperation pursuant to a Memorandum of Agreement between Alcoa and the Trustees, which was effective January 14, 1997. Both the Draft DARP/EA and the Revised Draft DARP/EA have been developed under the cooperative assessment framework outlined in the MOA.

The Draft DARP/EA was released for public review on September 28, 1999. That document described the assessment procedures used to define the recreational fishing service losses, including to scale restoration actions, and identified the restoration actions preferred to compensate for those service losses, based on the benefits of restoration to both pier/shore-mode and boat-mode anglers. None of the public comments received on the Draft DARP/EA raised any issue regarding the assessment methodology described therein or the restoration actions proposed to compensate for pier/shore-mode fishing losses. As such, these plan elements will be included in the Final DARP/EA. Significant public comments were received, however, relating to the restoration action proposed in the Draft DARP/EA to address the boat-mode fishing losses and, based upon these comments, the Trustees found it necessary to revise that portion of the plan. The Revised Draft DARP/EA summarizes the public comments received, identifies the revised, preferred restoration alternatives to address the remainder of the recreational fishing service losses, and explains the basis and rationale for that change. The Revised Draft DARP/EA is being released to allow for public review and comment on the preferred restoration alternatives now identified to restore or replace the remainder of the recreational fishing services needed to compensate the public for recreational fishing losses due to the closure.

The Revised Draft DARP/EA does not address any other natural resource injuries or service losses that may be attributable to the Site. Other resource injuries or losses are being considered by the Trustees but will be addressed in one or more subsequent damage assessment and restoration plans.

FOR FURTHER INFORMATION CONTACT: For further information contact: Richard Seiler at (512) 239–2523, email: rseiler@tnrcc.state.tx.us or Tony Penn, at (301) 713–3038 x197, email: tony.penn@noaa.gov

Dated: May 3, 2000.

Captain Ted I. Lillestolen,

Deputy Assistant Administrator for Ocean Services and Coastal Zone Management.

[FR Doc. 00–11512 Filed 5–11–00; 8:45 am]

BILLING CODE 3510–JE–P

DEPARTMENT OF COMMERCE

National Oceanic and Atmospheric Administration

Docket No. [000411103–0103–01; I.D. No. 021400B]

RIN: [0648–ZA86]

Announcement of Funding Opportunity for the Southeast Bering Sea Carrying Capacity Research Project.

AGENCY: Center for Sponsored Coastal Ocean Research (CSCOR)/Coastal Ocean Program (COP), National Ocean Service (NOS), National Oceanic and Atmospheric Administration (NOAA), Commerce.

ACTION: Solicitation of research proposals for the Southeast Bering Sea Carrying Capacity Research Project.

SUMMARY: The NOAA Coastal Ocean Program announces an opportunity for ecosystem dynamics studies on the southeastern Bering Sea shelf as part of the Southeast Bering Sea Carrying Capacity (SEBSCC) project. This announcement solicits 1-year and 2-year proposals for synthesis and limited monitoring to begin at the start of fiscal year (FY) 2001 (October 1, 2000), contingent upon the availability of funds and facilities. This Phase III announcement addresses years five and six of SEBSCC. Funding for SEBSCC will terminate at the end of Phase III (September 30, 2002).

This notice solicits applications for research projects from eligible non-Federal and Federal applicants. In an effort to maximize the use of limited resources, applications from non-Federal, non-NOAA Federal and NOAA applicants will be competed against each other. Research proposals selected for funding from non-Federal researchers will be funded through a project grant. Research proposals selected for funding from non-NOAA Federal applicants will be funded through an interagency transfer provided legal authority exists for the federal applicant to receive funds from another agency. Research proposals selected for funding from NOAA will be funded through NOAA.

DATES: The deadline for receipt of proposals at the COP office is 3 p.m. local time on July 11, 2000.

ADDRESSES: Submit the original and 13 copies of your proposal to the COP Office (SEBSCC 2001), SSMC#3, 9th Floor, Station 9700, 1315 East-West Highway, Silver Spring, MD 20910. In addition, submit an electronic copy of the proposal in either WordPerfect or MSWord format at time of initial application. NOAA Standard Form Applications with instructions are accessible on the following COP Internet Site: http://www.cop.noaa.gov under the COP Grants Support Section, Part D, Application Forms for Initial Proposal Submission.

Further information on this program and summaries and results of all projects funded under Phases I and II of SEBSCC are available from SEBSCC's web site at http://www.pmel.noaa.gov/sebscc and COP's web site at http://www.cop.noaa.gov

FOR FURTHER INFORMATION CONTACT: Technical Information: Allen Macklin at Pacific Marine Environmental Laboratory, 7600 Sand Point Way, Seattle, WA, 98115-0070, 206–526-6798, Internet: Allen.Macklin@noaa.gov, or Elizabeth Turner, SEBSCC 2001 Program Manager, Coastal Ocean Program Office, 301–713–3338/ext 135, Internet: Elizabeth.Turner@noaa.gov.

Business Management Information: Leslie McDonald, COP Grants Office, 301–713–3338/ext 137; Internet: Leslie.McDonald@noaa.gov.

SUPPLEMENTARY INFORMATION:

Background

Program Description

For complete program description and other requirements criteria for the Coastal Ocean Program, see COP's General Grant Administration Terms and Conditions annual notification in the **Federal Register** (64 FR 49162, September 10, 1999) and at the COP home page. It is anticipated that final selections for funding will be made in late fiscal year 2000.

The Bering Sea ecosystem experiences interannual and climate variability. Oceanographic conditions observed during Phases I and II of SEBSCC

differed in several key respects. For example, summer of 1997 brought warm (+3 degree C) sea temperature anomalies, unusually strong stratification, a coccolithophorid bloom, and reduced numbers of foraging sea birds and returning salmon. The year 1999 brought cold sea temperatures that have not been seen since the mid-1970s.

Strong contrasts in ocean conditions provide a basis for synthesis and comparison of the role of oceanic conditions on the carrying capacity of the Bering Sea. Specifically, proposals are sought that examine existing data to understand how oceanographic changes affect the food web and food supply to higher trophic level animals. Also, proposals are sought that seek to test whether selected biophysical indices can be used to identify the state of the ecosystem and the juvenile walleye pollock (*Theragra chalcogramma*) resource and to measure the predictive capability of those indices.

The Bering Sea ecosystem is among the most productive of high-latitude seas and supports large populations of marine fish, birds and mammals. This productivity is important to the U.S. economy in that fish and shellfish from the region constitute almost 5 percent of the world and 40 percent of the U.S. fisheries harvest. Pollock, salmon, halibut, and crab generate over 2 billion dollars per year in fisheries revenue and provide a major source of protein. The overwhelming dominance of pollock in the Bering Sea means that this species currently plays a singularly important role in this ecosystem. SEBSCC Phase I and II research sought to understand the processes controlling the Bering Sea ecosystem. During those studies, several indications of ecosystem change were detected. The synthesis phase of SEBSCC is designed to assimilate research findings on biophysical processes underlying the ecosystem change in the Bering Sea.

Quantifying the relative importance of natural variations and human-induced variations in explaining upper trophic level ecosystem changes is a key management issue for the Bering Sea. Differentiating trends in fish stock abundance attributable to human exploitation from trends due to natural variations is difficult because the fisheries and environmental time series are often short or incomplete. Trends are seldom stable and can be subject to regional variation. Important lower trophic level changes include those natural and anthropogenic variations that cause shifts in the production of new organic matter and its vertical distribution.

SEBSCC postulates that a large fraction of the Bering Sea ecosystem energy passes through the pollock population. Juvenile pollock respond to and potentially impact primary and secondary production through grazing, and influence the availability of food for upper trophic level species, including adult pollock, seabirds, and marine mammals. Pollock provide an important measure of the condition of the present ecosystem, and may be an indicator of changes in the Bering Sea over the last three decades and in the future.

The SEBSCC program is designed to improve our understanding of the Bering Sea ecosystem; the results of this endeavor will directly assist fishery and resource managers.

SEBSCC Goal and Phase III Objectives

The goal of SEBSCC is to increase understanding of the southeastern Bering Sea pelagic ecosystem. New information will be used to develop and test annual indices of pre-recruit (age–0 and age–1) pollock abundance that will support management of pollock stocks and help determine food availability to other species.

The specific objectives for Phase III are to:

(1) Develop indices for pre-recruit pollock in the Bering Sea by using several complimentary approaches;

(2) Provide limited monitoring to test proposed indices;

(3) Provide a synthesis of current Bering Sea ecosystem research, as documented in a special journal issue to be published in 2001 and other sources, for publication in the Coastal Ocean Program Decision Analysis Series.

Structure of the Research Program

SEBSCC is a NOAA COP regional ecosystem project begun in 1996. This continuing effort is managed by the University of Alaska Fairbanks, NOAA's Alaska Fisheries Science Center, and NOAA's Pacific Marine Environmental Laboratory. SEBSCC synthesis research comprises three components: modeling and index development, monitoring, and synthesis/assessment of results of process-oriented field studies.

(1) *Modeling and index development*: This effort is designed to synthesize results generated by SEBSCC or by other programs and historical data, using conceptual, theoretical, statistical, and numerical models to investigate the ecosystem, especially the role of pollock. Proposals are encouraged that will provide spatially explicit biophysical models that quantify the influence of ocean forcing on the bioenergetics, life history, and age structure of pollock populations in the Bering Sea.

The time period should emphasize information gained through process studies and system observations during the SEBSCC years 1995–1999 or a broader retrospective period from the 1970s to the 1999s. SEBSCC anticipates funding three or four parallel but complementary approaches to synthesis of information on the Bering Sea and development of pollock recruitment indices. These include, but are not limited to:

(a) Fisheries modeling that emphasizes a top-down approach, but includes the impact of juvenile pollock and some spatial and ecosystem dependence;

(b) Coupled biophysical models that contrast transport and food variability in the different SEBSCC years 1995–1999, and treat pollock to age 6 months;

(c) Conceptual/observationally based studies to develop and test indices, including, but not limited to, retrospective analysis of the performance of selected ecosystem parameters that are leading indicators of pollock production and/or ecosystem change.

Investigators should demonstrate how their research would improve our understanding of the impacts of ocean forcing on marine production and how these findings can be used to improve resource management of the eastern Bering Sea. Efforts to quantify uncertainty in model predictions are highly encouraged.

(2) *Monitoring*: The aim of the monitoring component is to provide the basis for interannual comparison of the population processes and their coupling to the physical structure and variability of the environment. Shipboard studies help to determine the distribution and abundance of target organisms in relation to their physical environment. SEBSCC suggests the continuation of the biophysical mooring at Site 2 and a spring biological cruise that measures water properties, nutrients, zooplankton and larval pollock at previous SEBSCC sites. Funding is available for making observations and data processing.

(3) *Written synthesis/assessment of results of process studies*: Research results from SEBSCC Phases I and II and other programs are to be submitted to a special journal issue by September 2000. Under this AO, there is an opportunity for researchers to use the content of the special issue, additional SEBSCC material and other information to produce a manuscript for inclusion in a Coastal Ocean Program Decision Analysis Series report. The manuscript will review SEBSCC and other research

results, evaluate their importance in meeting the goals of SEBSCC and management needs, discuss progress in understanding the ecosystem of the southeastern Bering Sea, and make recommendations for future research.

About Phases I and II

Proposals for Phase I studies were requested in 1996 and funded in fiscal years 1997 and 1998. Summaries and results of all projects funded under Phase I of SEBSCC are available from the SEBSCC web site, see **ADDRESSES**.

Central Scientific issues for Phase I included the following:

(1) *Influence of climate variability on the Bering Sea ecosystem*: Was there historical evidence for a biophysical regime shift on the Bering Sea shelf? How was this reflected in ecological relationships and species mix? Are there ''top-down'' ecosystem effects associated with climate variations as well as with ''bottom-up'' effects?

(2) *Limited population growth on the Bering Sea shelf*: Was there evidence of a single species carrying capacity, e.g. for pollock, or a more complex structure? What is the ecological role of pollock on the Bering Sea shelf, i.e. how are pollock, forage fish, and apex species linked through energetics and life history? How important is cannibalism?

(3) *Influence of oceanographic conditions of biological distribution on the shelf*: How do the separate mixing domains, sea ice, and cold pool influence the overlap or separation between predators and prey?

(4) *Possible influences on primary and secondary production regimes*: What were the sources of nutrients to the southeastern Bering Sea shelf, and what processes affected their availability? Has the variability in sea ice extent and timing been the primary factor influencing productivity? What has determined the relative allocation of organic carbon going to benthos versus that remaining in the pelagic system? What are the lower trophic level structure and energetics on the shelf in summer and winter, especially regarding euphausiids? What is the role of gelatinous organisms?

Proposals for Phase II studies were requested in 1998 and funded in FYs 1999 and 2000. Summaries and results of all projects funded under Phase II of SEBSCC are available from the SEBSCC web site, see **ADDRESSES**.

The specific objectives for Phase II were to:

(1) Determine how changes in on-shelf transport of nutrients impact pelagic food webs. This includes determination of how timing, duration, magnitude, and species composition of primary, secondary, and forage fish production affect food availability for higher trophic levels.

(2) Determine how climate variability influences the spatial overlap of pollock of different life stages, and how the availability of juvenile pollock to predators affects pollock survival rate.

Part I: Schedule and Proposal Submission

The provisions for proposal preparation provided here are mandatory. Proposals received after the published deadline or proposals that deviate from the prescribed format will be returned to the sender without further consideration. This announcement and additional background information will be made available on the COP home page.

Full proposals addressing Phase III, objective (1), should cover a 2-year project period, i.e., from date of award through twenty-four (24) consecutive months. Proposals addressing Phase III, objective (2), should cover a 1-year period, FY 2001. Proposals addressing objective (3) should cover a 1-year period commencing with acceptance of manuscripts for the special journal issue (approximately spring 2001). Prospective investigators should provide a full scientific justification for their research and not simply reiterate justifications laid out in this AO or in previous documents.

Proposals should be written to allow adequate review of the details of such things as goals and objectives, conceptual framework, methodological approaches, integration with other likely projects and syntheses. Variables to be used as candidate indices are to be directly mentioned and justified.

Successful proposers are strongly encouraged to present preliminary results at the Tenth Annual PICES meeting planned for Victoria, B.C., Canada, in October 2001. Travel costs for the meeting may be included in prospective budgets. In addition, it would be helpful if a statement is included as to how proposed efforts are related to efforts of other potential investigators; interdisciplinary and multi-trophic level coordination are particularly encouraged. Because of an 8–page limitation for the project description, individual proposals with overly complex structure and large numbers of investigators are discouraged.

Full Proposals

Applications submitted to this announcement require an original proposal and 13 proposal copies at time of submission. This requirement includes color or high-resolution graphics, unusually sized materials (not 8.5'' x 11'', or 21.6 cm x 28 cm), or otherwise unusual materials submitted as part of the proposal. For color graphics, submit either color originals or color copies. In addition, an electronic copy of the proposal in either WordPerfect or MSWord format is requested at time of initial application. The stated requirements for the number of original proposal copies provide for a timely review process because of the large number of technical reviewers. Facsimile transmissions and electronic mail submission of full proposals will not be accepted.

Required Elements

All recipients are to follow closely the instructions and requirements in the preparation of the standard NOAA Application Forms and Kit requirements listed in Part II: Further Supplementary Information, paragraph (10) of this document. Each proposal must also include the following eight elements:

(1) *Signed summary title page*: The title page should be signed by the PI and the institutional representative. The summary title page identifies the project's title starting with the acronym SEBSCC 2000, a short title (<50 characters), and the lead principal investigator's name and affiliation, complete address, phone, FAX, and E-mail information. The requested budget for each fiscal year should be included on the summary title page. Multi-institution proposals must include signed summary title pages from each institution.

(2) *One-page abstract/project summary*: The Project Summary (Abstract) Form, which is to be submitted at time of application, shall include an introduction of the problem, rationale, scientific objectives and/or hypotheses to be tested, and a brief summary of work to be completed. State whether you are proposing modeling and index development, monitoring, or synthesis/assessment of process studies.

For modeling and index development, describe the method(s) to be used, the relation to potential pollock indices, and the hypothesis to be tested. For monitoring, state the relationship to existing observations and to development of a pre-recruit index. The prescribed COP format for the Project Summary Form can be found on the COP Internet site under the COP Grants Support Section.

The summary should appear on a separate page, headed with the proposal title, institution(s), investigator(s), total proposed cost, and budget period and

should be written in the third person. The summary is used to help compare proposals quickly and allows the respondents to summarize these key points in their own words.

(3) *Statement of work/project description*: The project description section should not exceed eight pages of text and five figures. It is important to provide a full scientific justification for the research; and not to simply reiterate justifications presented in this document. Page and figure limits are inclusive of figures and other visual materials, but exclusive of references and milestone chart. This section should include:

(a) The objective for the period of proposed work and its expected result and significance;

(b) The relation to the present state of knowledge in the field and relation to previous work and work in progress by the proposing principal investigator(s);

(c) A discussion of how the proposed project lends value to the program goals and provides synthesis and support for selection of indices, if applicable;

(d) A project management statement that clearly identifies the functions of each PI within a team;

(e) A potential coordination with other investigators;

(f) An intent to adhere to NOAA's specific requirements that environmental data be submitted to the National Oceanographic Data Center; adherence to the data policy that is posted on SEBSCC's home page; and

(g) References cited: Reference information is required. Each reference must include the names of all authors in the same sequence in which they appear in the publications, the article title, volume number, page numbers, and year of publications. While there is no established page limitation, this section should include bibliographical information only and should not be used to provide parenthetical information outside of 8–page project description.

(4) *Milestone chart*: Time lines of major tasks covering the 12– to 24-month duration of the proposed project.

(5) *Budget*: At time of proposal submission, all applicants shall submit the Standard Form, SF–424 (Rev 7–97), Application for Federal Assistance, to indicate the total amount of funding proposed for the whole project period. In lieu of the Standard Form 424A, Budget Information (Non-Construction), at time of original application, all proposers are required to submit a COP Summary Proposal Budget Form for each fiscal year increment (i.e., 2001, 2002). Multi-institution proposals must include budget forms from each institution.

This budget form, compatible with forms in use by other agencies that participate in joint projects with COP, will provide a detailed annual budget and the level of detail required by the COP program staff to evaluate the effort to be invested by investigators and staff on a specific project. The COP budget form can be found on the COP home page under COP Grants Support, Part D, or may be requested from the COP Grants Administrator listed under FURTHER INFORMATION.

All applicants shall include a budget narrative/justification that supports all proposed budget object class categories. The program office will review the proposed budgets to determine the necessity and adequacy of proposed costs for accomplishing the objectives of the proposed grant. The SF–424A, Budget Information (Non-Construction) Form, shall be requested from only those recipients subsequently recommended for award to the NOAA Grants Management Division after the competitive review process has been completed.

(6) *Biographical sketch*: An abbreviated curriculum vitae, two pages per investigator, is sought with each proposal. Include a list of up to five publications most closely related to the proposed project and up to five other significant publications, not related to the project. Include a list of all persons (including their organizational affiliation), in alphabetical order, who have collaborated on a project, book, article, or paper within the last 48 months. If no collaborators exist, indicate their absence. Disclose students, post-doctoral associates, and graduate and postgraduate advisors of the PI because this information is used to help identify potential conflicts of interest or bias in the selection of reviewers.

(7) *Current and pending support*: Describe all current and pending support for all PIs, including subsequent funding in the case of continuing grants. List all current support from whatever source (e.g., Federal, state or local government agencies, private foundations, industrial or other commercial organizations). Include the proposed project and all other projects or activities requiring a portion of time of the PI and other senior personnel even if they receive no salary support from the project(s). Show the total award amount for the entire award period covered (including indirect costs) should be shown as well as the number of persons or months per year to be devoted to the project, regardless of source of support.

(8) *Proposal format and assembly*: Clamp the proposal in the upper left-hand corner, but leave it unbound. Use one inch (2.5 cm) margins at the top, bottom, left and right of each page. Use a clear and easily legible type face in standard 12 point size.

Part II: Further Supplementary Information

(1) *Program authorities*: For a list of all program authorities for the Coastal Ocean Program, see COP's General Grant Administration Terms and Conditions annual document in the **Federal Register** (64 FR 49162, September 10, 1999) and at the COP home page. Specific authority cited for this Announcement is 33 U.S.C. 883(d) for Coastal Ocean Program.

(2) *Catalog of Federal Domestic Assistance Numbers*: 11.478 for the Coastal Ocean Program.

(3) *Program description*: For complete COP program descriptions, see the annual COP General Document (64 FR 49162, September 10, 1999).

(4) *Funding availability*: Funding is contingent upon receipt of fiscal years 2001–2002 Federal appropriations. The anticipated maximum annual funding for SEBSCC is $700,000 in FYs 2001 and $300,000 in FY 2002. It is anticipated that $450,000 in FYs 2001 and $200,000 in FY 2002 will be available to fund three or four modeling and index development projects addressing Phase III objective (1). Further, it is projected that approximately $150,000 will be available for monitoring in FY 2001 to address Phase III objective (2). In 2001, one month of ship time is expected during spring for monitoring work. Joint work with other research institutions on their vessels is a possibility. Approximately $40,000 will be available for synthesis/assessment of results of process studies. This component will begin when all submissions to the special journal issue are accepted, probably spring 2001.

It is recognized that resources are limited; therefore, potential investigators are encouraged to consider leveraging their proposals with support from other sources, although this is not a requirement. Investigators interested in the Bering Sea may also consider becoming no-cost collaborators; ship time and modest travel support would be available.

If an application is selected for funding, NOAA has no obligation to provide any additional prospective funding in connection with that award in subsequent years. Renewal of an award to increase funding or extend the

period of performance is based on satisfactory performance and is at the total discretion of the funding agencies.

Publication of this document does not obligate any agency to any specific award or to any part of the entire amount of funds available. Recipients and subrecipients are subject to all Federal laws and agency policies, regulations, and procedures applicable to Federal financial assistance awards.

(5) *Matching Requirements*: None.

(6) *Type of funding instrument*: Project Grants for non-Federal applicants; interagency transfer agreements or other appropriate mechanisms other than project grants or cooperative agreements for Federal applicants.

(7) *Eligibility criteria*: For complete eligibility criteria for the Coastal Ocean Program, see COP's General Grant Administration Terms and Conditions annual notification in the **Federal Register** (64 FR 49162, September 10, 1999) and at the COP home page. Federal researchers in successful multi-investigator proposals will be funded through NOAA. Proposals deemed acceptable from Federal researchers will be funded through a mechanism other than a grant or cooperative agreement, where legal authority allows for such funding. Non-NOAA Federal applicants are required to submit certification or documentation which clearly shows that they can receive funds from the Department of Commerce (DoC) for research (i.e., legal authority exists allowing the transfer of funds from DoC to the non-NOAA Federal applicant's agency).

(8) *Award period*: Full Proposals should cover a project period of 1 or 2 years, FYs 2001–2002. Multi-year funding will be funded incrementally on an annual basis. Therefore, each annual award shall require a Statement of Work that is clearly severable and can be easily separated into annual increments of meaningful work which represent solid accomplishments if prospective funding is not made available.

(9) *Indirect costs*: If indirect costs are proposed, the following statement applies: The total dollar amount of the indirect costs proposed in an application must not exceed the indirect cost rate negotiated and approved by a cognizant Federal agency prior to the proposed effective date of the award.

(10) *Application forms*: For complete information on application forms for the Coastal Ocean Program, see COP's General Grant Administration Terms and Conditions annual document in the **Federal Register** (64 FR 49162, September 10, 1999), Part (9) Application Forms and Kit; and at the COP home page, under Grants Support, Part D, Application Forms for Initial Proposal Submission; and the information given earlier in this document under *Required Elements*, paragraph (5) Budget.

With the exception of the Standard Form 424 (Rev July 1997) Application for Federal Assistance, the other standard NOAA forms required as part of a complete application package may be submitted at time of application, or at a later date if the applicant is subsequently notified of selection for funding.

(11) *Project funding priorities*: For description of project funding priorities, see COP's General Grant Administration Terms and Conditions annual document in the **Federal Register** (64 FR 49162, September 10, 1999) and at the COP home page. Those priorities are in addition to the priorities listed in this document.

(12) *Evaluation criteria*: For complete information on evaluation criteria, see COP's General Grant Administration Terms and Conditions annual document in the **Federal Register** (64 FR 49162, September 10, 1999) and at the COP home page.

(13) *Selection procedures*: For complete information on selection procedures, see COP's General Grant Administration Terms and Conditions annual document in the **Federal Register** (64 FR 49162, September 10, 1999) and at the COP home page.

(14) *Other requirements*: Intergovernmental Review: Applications under this program are not subject to Executive Order 12372, ''Intergovernmental Review of Federal Programs''. For a complete description of all other requirements, see COP's General Grant Administration Terms and Conditions annual document in the **Federal Register** (64 FR 49162, September 10, 1999) and at the COP home page.

(15) Pursuant to Executive Orders 12876, 12900 and 13021, the Department of Commerce, National Oceanic and Atmospheric Administration (DOC/NOAA) is strongly committed to broadening the participation of Historically Black Colleges and Universities, Hispanic Serving Institutions and Tribal Colleges and Universities in its educational and research programs. The DOC/NOAA vision, mission and goals are to achieve full participation by Minority Serving Institutions (MSIs)in order to advance the development of human potential, to strengthen the nation's capacity to provide high-quality education, and to increase opportunities for MSIs to participate in, and benefit from, Federal Financial Assistance programs. DOC/NOAA encourages all applicants to include meaningful participation of MSIs.

(16) Applicants are hereby notified that they are encouraged, to the greatest practicable extent, to purchase American-made equipment and products with funding provided under this program.

(17) This notification involves collection-of-information requirements subject to the Paperwork Reduction Act. The use of Standard Forms 424, 424A, 424B, and SF-LLL has been approved by the Office of Management and Budget (OMB) under control numbers 0348–0043, 0348–0044, 0348–0040 and 0348–0046.

The COP Grants Application Package has been approved by OMB under control number 0648–0384 and includes the following information collections: a Summary Proposal Budget Form, a Project Summary Form, standardized formats for the Annual Performance Report and the Final Report, and the submission of up to 20 copies of proposals. Copies of these forms and formats can be found on the COP Home Page under Grants Support section, Part F.

Notwithstanding any other provision of law, no person is required to respond to, nor shall any person be subject to a penalty for failure to comply with a collection of information subject to the requirements of the Paperwork Reduction Act, unless that collection displays a currently valid OMB control number.

Dated: May 8, 2000.

Ted I. Lillestolen,

Deputy Assistant Administrator, National Ocean Service, National Oceanic and Atmospheric Administration.

[FR Doc. 00–12033 Filed 5–11–00; 8:45 am]

BILLING CODE 3510–JS–F

COMMITTEE FOR THE IMPLEMENTATION OF TEXTILE AGREEMENTS

Adjustment of an Import Limit for Certain Man-Made Fiber Textile Products Produced or Manufactured in Belarus

May 9, 2000.

AGENCY: Committee for the Implementation of Textile Agreements (CITA).

ACTION: Issuing a directive to the Commissioner of Customs increasing a limit.

EFFECTIVE DATE: May 16, 2000.

FOR FURTHER INFORMATION CONTACT: Naomi Freeman, International Trade Specialist, Office of Textiles and Apparel, U.S. Department of Commerce, (202) 482–4212. For information on the quota status of these limits, refer to the Quota Status Reports posted on the bulletin boards of each Customs port, call (202) 927–5850, or refer to the U.S. Customs website at http://www.customs.gov. For information on embargoes and quota re-openings, call (202) 482–3715.

SUPPLEMENTARY INFORMATION:

Authority: Section 204 of the Agricultural Act of 1956, as amended (7 U.S.C. 1854); Executive Order 11651 of March 3, 1972, as amended.

The current limit for Category 622 is being increased for carryforward. The sublimit for Category 622–L remains unchanged.

A description of the textile and apparel categories in terms of HTS numbers is available in the CORRELATION: Textile and Apparel Categories with the Harmonized Tariff Schedule of the United States (see **Federal Register** notice 64 FR 71982, published on December 22, 1999). Also see 65 FR 15315, published on March 22, 2000.

D. Michael Hutchinson,

Acting Chairman, Committee for the Implementation of Textile Agreements.

May 9, 2000.

Commissioner of Customs,

Department of the Treasury, Washington, DC 20229.

Dear Commissioner: This directive amends, but does not cancel, the directive issued to you on March 16, 2000, by the Chairman, Committee for the Implementation of Textile Agreements. That directive concerns imports of certain man-made fiber textile products, produced or manufactured in Belarus and exported during the twelve-month period which began on January 1, 2000 and extends through December 31, 2000.

Effective on May 16, 2000, you are directed to increase the limit for the following category, as provided for under the Uruguay Round Agreement on Textiles and Clothing:

Category	Adjusted twelve-month limit [1]
622	12,190,000 square meters of which not more than 1,000,000 square meters shall be in Category 622–L [2].

[1] The limit has not been adjusted to account for any imports exported after December 31, 1999.

[2] Category 622–L: only HTS numbers 7019.51.9010, 7019.52.4010, 7019.52.9010, 7019.59.4010, and 7019.59.9010.

The Committee for the Implementation of Textile Agreements has determined that this action falls within the foreign affairs exception to the rulemaking provisions of 5 U.S.C.553(a)(1).

Sincerely,

D. Michael Hutchinson,

Acting Chairman, Committee for the Implementation of Textile Agreements.

[FR Doc. 00–12025 Filed 5–11–00; 8:45 am]

BILLING CODE 3510–DR–F

COMMITTEE FOR THE IMPLEMENTATION OF TEXTILE AGREEMENTS

Adjustment of Import Limits for Certain Cotton, Wool and Man-Made Fiber Textile Products Produced or Manufactured in Cambodia

May 8, 2000.

AGENCY: Committee for the Implementation of Textile Agreements (CITA).

ACTION: Issuing a directive to the Commissioner of Customs increasing limits.

EFFECTIVE DATE: May 12, 2000.

FOR FURTHER INFORMATION CONTACT: Roy Unger, International Trade Specialist, Office of Textiles and Apparel, U.S. Department of Commerce, (202) 482–4212. For information on the quota status of these limits, refer to the Quota Status Reports posted on the bulletin boards of each Customs port, call (202) 927–5850, or refer to the U.S. Customs website at http://www.customs.gov. For information on embargoes and quota re-openings, call (202) 482–3715.

SUPPLEMENTARY INFORMATION:

Authority: Section 204 of the Agricultural Act of 1956, as amended (7 U.S.C. 1854); Executive Order 11651 of March 3, 1972, as amended.

The limits for all quota categories are being increased as a result of the Royal Government of Cambodia's progress in improving working conditions in the Cambodian textile and apparel industries through increased compliance with internationally recognized core labor standards through the application of Cambodian labor law.

A description of the textile and apparel categories in terms of HTS numbers is available in the CORRELATION: Textile and Apparel Categories with the Harmonized Tariff Schedule of the United States (see **Federal Register** notice 64 FR 71982, published on December 22, 1999). Also see 64 FR 70217, published on December 16, 1999.

D. Michael Hutchinson,

Acting Chairman, Committee for the Implementation of Textile Agreements.

May 8, 2000.

Committee for the Implementation of Textile Agreements

May 8, 2000.

Commissioner of Customs,

Department of the Treasury, Washington, DC 20229.

Dear Commissioner: This directive amends, but does not cancel, the directive issued to you on December 10, 1999, by the Chairman, Committee for the Implementation of Textile Agreements. That directive concerns imports of certain cotton, wool and man-made fiber textile products, produced or manufactured in Cambodia and exported during the twelve-month period which began on January 1, 2000 and extends through December 31, 2000.

Effective on May 12, 2000, you are directed to increase the current limits for the following categories, as provided for under the terms of the current bilateral textile agreement between the Governments of the United States and Cambodia:

Category	Adjusted twelve-month limit [1]
331/631	1,905,880 dozen pairs.
334/634	189,822 dozen.
335/635	79,924 dozen.
338/339	2,691,500 dozen.
340/640	922,200 dozen.
345	115,582 dozen.
347/348/647/648	3,109,800 dozen.
352/652	737,760 dozen.
438	99,613 dozen.
445/446	128,876 dozen.
638/639	1,004,940 dozen.
645/646	307,400 dozen.

[1] The limits have not been adjusted to account for any imports exported after December 31, 1999.

The Committee for the Implementation of Textile Agreements has determined that these actions fall within the foreign affairs exception of the rulemaking provisions of 5 U.S.C. 553(a)(1).

Sincerely,

D. Michael Hutchinson,

Chairman, Committee for the Implementation of Textile Agreements.

[FR Doc. 00–12023 Filed 5–11–00; 8:45 am]

BILLING CODE 3510–DR–F

COMMITTEE FOR THE IMPLEMENTATION OF TEXTILE AGREEMENTS

Adjustment of Import Limits for Certain Cotton Textile Products Produced or Manufactured in Nepal

May 9, 2000.

AGENCY: Committee for the Implementation of Textile Agreements (CITA).

ACTION: Issuing a directive to the Commissioner of Customs reducing limits.

May 12, 2000.

FOR FURTHER INFORMATION CONTACT: Roy Unger, International Trade Specialist, Office of Textiles and Apparel, U.S. Department of Commerce, (202) 482–4212. For information on the quota status of these limits, refer to the Quota Status Reports posted on the bulletin boards of each Customs port, call (202) 927–5850, or refer to the U.S. Customs website at http://www.customs.gov. For information on embargoes and quota re-openings, call (202) 482–3715.

SUPPLEMENTARY INFORMATION:

Authority: Section 204 of the Agricultural Act of 1956, as amended (7 U.S.C. 1854); Executive Order 11651 of March 3, 1972, as amended.

The current limits for certain categories are being reduced for carryforward used.

A description of the textile and apparel categories in terms of HTS numbers is available in the CORRELATION: Textile and Apparel Categories with the Harmonized Tariff Schedule of the United States (see **Federal Register** notice 64 FR 71982, published on December 22, 1999). Also see 64 FR 54871, published on October 8, 1999.

D. Michael Hutchinson,

Acting Chairman, Committee for the Implementation of Textile Agreements.

May 9, 2000.

Commissioner of Customs,
Department of the Treasury, Washington, DC 20229.

Dear Commissioner: This directive amends, but does not cancel, the directive issued to you on October 4, 1999, by the Chairman, Committee for the Implementation of Textile Agreements. That directive concerns imports of certain cotton and man-made fiber textile products, produced or manufactured in Nepal and exported during the twelve-month period which began on January 1, 2000 and extends through December 31, 2000.

Effective on May 12, 2000, you are directed to reduce the current limits for the following categories, as provided for under the terms of the current bilateral textile agreement between the Governments of the United States and Nepal:

Category	Adjusted twelve-month limit [1]
340	457,399 dozen.
347/348	859,041 dozen.

[1] The limits have not been adjusted to account for any imports exported after December 31, 1999.

The Committee for the Implementation of Textile Agreements has determined that these actions fall within the foreign affairs exception of the rulemaking provisions of 5 U.S.C. 553(a)(1).

Sincerely,

D. Michael Hutchinson,

Acting Chairman, Committee for the Implementation of Textile Agreements.

[FR Doc. 00–12026 Filed 5–11–00; 8:45 am]

BILLING CODE 3510–DR–F

COMMITTEE FOR THE IMPLEMENTATION OF TEXTILE AGREEMENTS

Adjustment of Import Limits for Certain Wool Textile Products Produced or Manufactured in Romania

May 9, 2000.

AGENCY: Committee for the Implementation of Textile Agreements (CITA).

ACTION: Issuing a directive to the Commissioner of Customs increasing limits.

EFFECTIVE DATE: May 12, 2000.

FOR FURTHER INFORMATION CONTACT: Naomi Freeman, International Trade Specialist, Office of Textiles and Apparel, U.S. Department of Commerce, (202) 482–4212. For information on the quota status of these limits, refer to the Quota Status Reports posted on the bulletin boards of each Customs port, call (202) 927–5850, or refer to the U.S. Customs website at http://www.customs.gov. For information on embargoes and quota re-openings, call (202) 482–3715.

SUPPLEMENTARY INFORMATION:

Authority: Section 204 of the Agricultural Act of 1956, as amended (7 U.S.C. 1854); Executive Order 11651 of March 3, 1972, as amended.

The current limits for certain categories are being increased for special carryover which is being allowed in recognition of the disruption to Romania's exports in 1999 as a result of the crisis in Kosovo, and in accordance with the Memorandum of Understanding of April 20, 2000 regarding this special carryover.

A description of the textile and apparel categories in terms of HTS numbers is available in the CORRELATION: Textile and Apparel Categories with the Harmonized Tariff Schedule of the United States (see **Federal Register** notice 64 FR 71982, published on December 22, 1999). Also see 64 FR 71116, published on December 20, 1999.

D. Michael Hutchinson,

Acting Chairman, Committee for the Implementation of Textile Agreements; Committee for the Implementation of Textile Agreements.

May 9, 2000.

Commissioner of Customs,
Department of the Treasury, Washington, DC 20229.

Dear Commissioner: This directive amends, but does not cancel, the directive issued to you on December 14, 1999 by the Chairman, Committee for the Implementation of Textile Agreements. That directive concerns imports of certain cotton, wool, man-made fiber, silk blend and other vegetable fiber textiles and textile products, produced or manufactured in Romania and exported during the period which began on January 1, 2000 and extends through December 31, 2000.

Effective on May 12, 2000, you are directed to increase the current limits for the following categories, as provided for under the Uruguay Round Agreement on Textiles and Clothing:

Category	Adjusted limit [1]
433/434	16,567 dozen.
442	16,959 dozen.
443	96,804 numbers.
444	64,383 numbers.
447/448	28,395 dozen.

[1] The limits have not been adjusted to account for any imports exported after December 31, 1999.

The Committee for the Implementation of Textile Agreements has determined that these actions fall within the foreign affairs exception of the rulemaking provisions of 5 U.S.C. 553(a)(1).

Sincerely,

D. Michael Hutchinson,

Acting Chairman, Committee for the Implementation of Textile Agreements.

[FR Doc. 00–12024 Filed 5–11–00; 8:45 am]

BILLING CODE 3510–DR–F

CORPORATION FOR NATIONAL AND COMMUNITY SERVICE

Notice of Change in Application Deadline for Digital Divide Notice of Funding Availability

AGENCY: Corporation for National and Community Service.

ACTION: Notice of change in application deadline.

SUMMARY: The Corporation for National and Community Service has extended the deadline for applications under our notice of availability of funds published in the **Federal Register** on April 28, 2000 (65 FR 24920). The funds will support grants under the AmeriCorps*State Competitive, AmeriCorps*National, and Learn and Serve America K–12 School-based programs, to eligible organizations to help overcome the digital divide. The new deadline for applications is July 25, 2000. In addition, if you intend to submit an application, please send us a notice of intent by June 26, 2000. A notice of intent to submit is not required, but is helpful to us for planning purposes.

FOR FURTHER INFORMATION CONTACT: For further information, or to obtain an application, contact Maria Diaz at (202) 606–5000, ext. 372.

Dated: May 8, 2000.

Gary Kowalczyk,

Coordinator, National Service Programs, Corporation for National and Community Service.

[FR Doc. 00–11962 Filed 5–11–00; 8:45 am]

BILLING CODE 6050–28–P

DEPARTMENT OF DEFENSE

Reciprocal Procurement Memoranda of Understanding—Implementation Reviews

AGENCY: Department of Defense.

ACTION: Request for public comments.

SUMMARY: The Office of Foreign Contracting, Defense Procurement, is seeking information that will assist it in reviewing the defense procurement practices of countries with which the Department of Defense (DoD) has a reciprocal procurement Memorandum of Understanding (MOU). These countries are: Australia, Austria, Belgium, Canada, Denmark, Egypt, Finland, France, Germany, Greece, Israel, Italy, Luxembourg, Netherlands, Norway, Portugal, Spain, Sweden, Switzerland, Turkey, and the United Kingdom. Interested parties are invited to submit written comments concerning the defense procurement practices of MOU countries that will assist the Office of Foreign Contracting in evaluating the manner in which these reciprocal MOUs are being implemented.

DATES: Comments must be received no later than June 26, 2000.

ADDRESSES: Send all comments to Domenico C. Cipicchio, Deputy Director, Defense Procurement, Foreign Contracting, OUSD (AT&L), 3060 Defense Pentagon, Washington, DC 20301–3060.

FOR FURTHER INFORMATION CONTACT: Susan M. Hildner, Procurement Analyst, Defense Procurement, Foreign Contracting, OUSD (AT&L), 3060 Defense Pentagon, Washington, DC 20301–3060, (703) 697–9352.

SUPPLEMENTARY INFORMATION: The DoD has a bilateral reciprocal defense procurement MOU with each of the countries identified above. These MOUs are designed to promote interoperability and standardization of defense equipment between the U.S. and its allies. The MOUs also seek to eliminate buy-national barriers and other discriminatory procurement practices so that the industries of each country receive fair and equal access to each other's defense procurements. The Office of Foreign Contracting will be performing reviews of the manner in which these MOUs are being implemented and is interested in obtaining information on any discriminatory practices that hinder the ability of U.S. suppliers to compete for defense-related procurements within any of these countries. Problem areas could include: Inability to locate publication notices on upcoming procurements, difficulty in obtaining solicitations in a timely manner, inadequate response time for offers, issues associated with application of customs duties, buy-national practices that favor other than U.S. industry, imposition of offset requirements, inability to obtain debriefing information, inability to protest source selection decisions, and protection of proprietary information as well as any other discriminatory practice that needs to be addressed.

All materials should be submitted with 3 copies. Material that is business confidential information will be exempted from public disclosure as provided for by 5 U.S.C. 552(b)(4) (Freedom of Information ACT (FOIA) rules). Anyone submitting business confidential information should clearly identify the business confidential portion of the submission and also provide a non-confidential submission, which can be placed in the public file. Comments not marked business confidential may be subject to disclosure under FOIA.

Michele P. Peterson,

Executive Editor, Defense Acquisition Regulations Council.

[FR Doc. 00–11976 Filed 5–11–00; 8:45 am]

BILLING CODE 5000–04–M

DEPARTMENT OF THE DEFENSE

Department of the Army; Corps of Engineers

Notice of Intent To Prepare a Draft Supplemental Environmental Impact Statement (DSEIS) for Proposed Changes to the Kentucky Lock Addition Project, Marshall and Livingston Counties, Kentucky

AGENCY: U. S. Army Corps of Engineers, DoD.

ACTION: Notice of Intent and Announcement of Meeting

SUMMARY: The Corps of Engineers, Nashville District, and the Tennessee Valley Authority (Cooperating Agency) will prepare a DSEIS to the 1992 EIS titled Lower Cumberland and Tennessee Rivers Navigation Feasibility Report Kentucky Lock Addition, Volume 1 Final EIS. This supplement is necessary to provide National Environmental Policy Act (NEPA) coverage for proposed changes to the design of the project from that described in previous NEPA documents, which includes the 1992 EIS and the March 2000 Environmental Assessment for the Proposed Relocation of the U.S. Highway 62 and 641 Crossing of the Tennessee River at Kentucky Lock and Dam. A Public Meeting is scheduled to scope for potential issues to be evaluated in the SEIS. Further information on the upcoming meeting is provided in the **SUPPLEMENTARY INFORMATION** paragraph indicated below.

DATES: Written comments must be received by the Corps of Engineers on or before June 12, 2000.

ADDRESSES: Written comments on issues to be considered in the SEIS shall be mailed to: Tim Higgs, Project Planning Branch, Nashville District Corps of Engineers, P.O. Box 1070 (PM–P), Nashville, Tennessee 37202–1070.

FOR FURTHER INFORMATION CONTACT: For additional information concerning the notice and meeting announcement, please contact Tim Higgs, Environmental Analysis Team, (615) 736–7192 or Don Getty, Project Manager, (615) 736–2346.

SUPPLEMENTARY INFORMATION:

1. The intent of the Supplemental EIS is to provide National Environmental Policy Act coverage for design features of the Kentucky Lock Addition project that were unspecified when the original EIS was prepared. At the time of the original EIS, it was recognized that decisions on several key features could not be made until additional hydraulic modeling studies and engineering evaluations were performed. This additional evaluation has progressed to the point that the SEIS can be completed.

2. The original EIS for Kentucky Lock Addition was completed in 1992 and a Record of Decision signed in 1998. An environmental assessment (EA) was completed in March 2000 for the relocation of the U.S. Highway 62/641 Crossing over the Tennessee River. This EA addressed changes to the project from moving the crossing off the Kentucky Lock and Dam (river mile 22.4) to a site just downstream of the dam (river mile 22.1). The SEIS now proposed will cover all known remaining changes to the project from that described in the earlier EIS and EA.

3. Key proposed project features to be evaluated in the SEIS include the following:

a. Training dike(s) on the west bank of the Powerhouse Island to improve navigation conditions for barge traffic entering the locks on the downstream side.

b. Fishing enhancement features added as mitigation for construction impacts (bank closures):

(1) three west bank rock jetties below the west bank boat basin;

(2) expanded west bank boat basin which will be used by contractors during construction and available to the public after construction;

(3) new boat ramp in the west bank boat basin;

(4) fishing piers on the west bank and off the Powerhouse Island.

c. Construction of a new Lock Visitor's Center as mitigation for loss of Taylor Park Campground.

d. Fill placement in lower level of now inactive Taylor Park Campground.

e. Mooring buoys at either Tennessee River Mile 19.4 (Left Bank) or TRM 20.6L.

f. Underwater rock excavations in upstream and downstream lock approaches.

g. Wastewater treatment systems for the Lock and Dam facilities.

h. Widening of Highway 282 at the railroad underpass on the west bank.

i. Guidewall construction in the tailwater.

4. This notice serves to solicit comments from the public; federal, state and local agencies and officials; Indian Tribes; and other interested parties in order to consider and evaluate the impacts of this proposed activity. Any comments received by us will be considered to determine whether to perform this work. To make this decision, comments are used to assess impacts on endangered species, historic properties, water quality, water supply and conservation, economics, aesthetics, wetlands, flood hazards, floodplain values, land use, navigation, shore erosion and accretion, recreation, energy needs, safety, food and fiber production, mineral needs, considerations of property ownership, general environmental effects, and in general, the needs and welfare of the people.

5. Activities proposed that require a review under the guidelines promulgated by the Administrator, Environmental Protection Agency (EPA), under authority of Section 404(b)(1) of the Clean Water Act (40 CFR Part 230) include fill placement for fishing enhancement features and riprap temporarily placed in the lower lock approach channel.

6. Other federal, state and local approvals required for the proposed work are as follows:

a. Water quality certification from the Kentucky Division of Water.

b. Coordination with the U.S. Fish and Wildlife Service, including a Biological Assessment/Opinion for Endangered Species Act and a Fish and Wildlife Coordination Act Report.

7. Significant issues to be analyzed in depth in the draft SEIS include impacts to tailwater mussel resources, tailwater fishing activities, and commercial and recreational boating activities. The Tennessee Valley Authority has agreed to be a Cooperating Agency on the SEIS and will be responsible for preparing much of the evaluations of significant resources. A draft SEIS should be available in February 2001.

8. *Public Meeting:* A public meeting is scheduled to scope for potential issues to be evaluated in the SEIS as follows:

Date: May 22, 2000.

Time: 6:30 p.m. to 9 p.m.

Place: Kentucky Dam Village State Park Convention Center, U.S. Highway 641, Gilbertsville, Kentucky.

Peter F. Taylor, Jr.,

Lieutenant Colonel, Corps of Engineers, District Engineer.

[FR Doc. 00–12034 Filed 5–11–00; 8:45 am]

BILLING CODE 3710–GF–P

DEPARTMENT OF EDUCATION

[CFDA No. 84.258]

Even Start Family Literacy Program Grants for Indian Tribes and Tribal Organizations

AGENCY: Department of Education.

ACTION: Notice inviting applications for new awards for fiscal year (FY) 2000.

Purpose of Program: The Even Start Family Literacy Program for Indian tribes and tribal organizations is designed to help break the cycle of poverty and illiteracy by improving the educational opportunities of low-income families by integrating early childhood education, adult literacy or adult basic education, and parenting education into a unified family literacy program for federally recognized Indian tribes and tribal organizations.

Eligible Applicants: Federally recognized Indian tribes and tribal organizations. (The term ''Indian tribe'' and ''tribal organization'' have the meanings given those terms in section 4 of the Indian Self-Determination and Education Assistance Act.)

Applications Available: May 12, 2000.

Deadline for Transmittal of Applications: June 30, 2000.

Available Funds: The Secretary estimates that there will be approximately $1,500,000 in FY 2000 funds for new grants.

Estimated Range of Awards: $100,000–$200,000.

Estimated Size of Average Award: $175,000.

Estimated Number of Awards: 8–10.

Note: The Department is not bound by any estimates in this notice.

Project Period: Up to 48 months.

Applicable Regulations: The Education Department General Administrative Regulations (EDGAR) in 34 CFR parts 75, 77, 80, 81, 82, 85, 97, 98, and 99.

SUPPLEMENTARY INFORMATION:

Description of Program

Under the authority of section 1202(a)(1)(C) of the Elementary and Secondary Education Act (ESEA), the Assistant Secretary of Elementary and Secondary Education (Assistant Secretary) awards grants to eligible applicants for projects that—

- Improve the educational opportunities of low-income families by integrating early childhood education, adult literacy or adult basic education, and parenting education into a unified family literacy program for federally recognized Indian tribe and tribal organization projects;
- Are implemented through cooperative activities that build on

existing community resources to create a new range of services for federally recognized Indian tribe and tribal organization projects;

• Promote achievement of the National Education Goals one, three, five, and eight that address school readiness, student achievement, adult literacy, and parent involvement in the education of their children; and

• Assist children and adults to achieve to challenging State content standards and challenging State student performance standards.

Each project must use the grant funds to provide an intensive family-centered education program that involves parents and children, from birth through age seven, in a cooperative effort to help parents become full partners in the education of their children and to assist children in reaching their full potential as learners.

In accordance with section 1205 of the ESEA, each project must include ten specific program elements (listed in the application package). Those ten elements include *in part* the following activities: identifying, recruiting, and providing services to families that are the most in need of family literacy services, as indicated by a low level of adult literacy or English language proficiency of the eligible parent or parents, and other need-related indicators; providing (through collaboration with other entities when possible) high-quality, intensive instructional programs in adult basic or secondary education (or English language training), early childhood education, literacy-based parenting education training, and interactive literacy activities between parents and their children; and providing year-round services, including some instructional services in the home. For a specific description of all of the required program elements, applicants should refer to the application package.

Eligible Participants

Eligible participants are families with children and their parents who also meet the following conditions specified in section 1206(a) of the ESEA:

(1) The parent or parents must be eligible for participation in an adult education program under the Adult Education Act; or within the State's compulsory school attendance age range (in which case a local educational agency must provide (or ensure the availability of) the basic education component); and

(2) The child or children must be younger than eight years of age.

Federal and Local Funding

An Even Start Family Literacy project's funding is comprised of both a Federal portion of funds (Federal share) and a portion contributed by the eligible applicant (local project share). The local share of the project may be provided in cash or in kind and may be obtained from any source, including other Federal programs funded by the ESEA. The Federal share of the project may not exceed—

• 90 percent of the total cost of the project in the first year;
• 80 percent in the second year;
• 70 percent in the third year;
• 60 percent in the fourth year;
• 50 percent in the fifth through eight years; and
• 35 percent in any subsequent year.

The Federal share for any grantee receiving a grant for a second grant cycle may not exceed 50 percent, and for any cycle after that may not exceed 35 percent. Any grantee that wishes to reapply at the end of a project period (up to 48 months) must recompete for funding with new applicants.

Indirect Costs

Even Start Family Literacy Program funds may not be used for the indirect costs of a project. Recipients of an Even Start Indian tribe and tribal organization grant may request the Secretary to waive this requirement. To obtain a waiver, however, the recipient must demonstrate to the Secretary's satisfaction that the recipient otherwise would not be able to participate in the Even Start Family Literacy Program.

National Evaluation

The Department is conducting a national evaluation of Even Start Family Literacy projects. Grantees are required to participate in the Department's national evaluation and to conduct a separate independent local evaluation consistent with the grantee's responsibilities under 34 CFR 75.590. Specific information about budgeting for those evaluations are contained in the application package.

FOR FURTHER INFORMATION CONTACT: To obtain a copy of the application package or further information, contact Doris Sligh, Compensatory Education Programs, Office of Elementary and Secondary Education, U.S. Department of Education, 400 Maryland Avenue SW, Washington, DC 20202–6132; telephone (202) 260–0999; or email doris_sligh@ed.gov.

The application package also is available on the Department's Web site at: www.ed.gov/GrantApps/#84.258.

Individuals who use a telecommunications device for the deaf (TDD) may call the Federal Information Relay Service (FIRS) at 1–800–877–8339. Individuals with disabilities may obtain this document in an alternate format (*e.g.,* Braille, large print, audiotape, or computer diskette) on request to the contact person listed in the preceding paragraph.

Individuals with disabilities may obtain a copy of the application package in an alternative format by contacting that person. However, the Department is not able to reproduce in an alternative format the standards forms included in the application package.

Electronic Access to This Document

Anyone may view this document, as well as all other Department of Education documents published in **Federal Register,** in text or Adobe Portable Document Format (PDF) on the Internet at either of the following sites:

http://ocfo.ed.gov/fedreg.htm
http://www.ed.gov/news.html

To use the PDF, you must have Adobe Acrobat Reader, which is available free at either of the previous sites. If you have questions about using the PDF, call the U.S. Government Printing Office (GPO) toll free at 1–888–293–6498, or in the Washington DC area at (202) 512–1530.

The official version of this document is the document published in the **Federal Register**. Free Internet access to the official education of the **Federal Register** and Code of Federal Regulations is available on GPO Access at: http://www.access.gpo.gov/nara/index.html.

Program Authority: 20 U.S.C. 6362(c).

Dated: May 9, 2000.

Michael Cohen,

Assistant Secretary for Elementary and Secondary Education.

[FR Doc. 00–12162 Filed 5–11–00; 8:45 am]

BILLING CODE 4000–01–M

DEPARTMENT OF EDUCATION

Arbitration Panel Decision Under the Randolph-Sheppard Act

AGENCY: Department of Education.

ACTION: Notice of Arbitration Panel Decision Under the Randolph-Sheppard Act.

SUMMARY: Notice is hereby given that on March 31, 1999, an arbitration panel rendered a decision in the matter of *West Virginia Department of Education and the Arts, Division of Rehabilitation Services* v. *U.S. Department of Labor, Mine Safety and Health Administration (Docket No. R-S/97–14).* This panel was

convened by the U.S. Department of Education pursuant to 20 U.S.C. 107d-1(b) upon receipt of a complaint filed by petitioner, the West Virginia Department of Education and the Arts, Division of Rehabilitation Services.

FOR FURTHER INFORMATION: A copy of the full text of the arbitration panel decision may be obtained from George F. Arsnow, U.S. Department of Education, 400 Maryland Avenue, SW., room 3230, Mary E. Switzer Building, Washington DC 20202–2738. Telephone: (202) 205–9317. If you use a telecommunications device for the deaf (TDD), you may call the TDD number at (202) 205–8298.

Individuals with disabilities may obtain this document in an alternate format (*e.g.,* Braille, large print, audiotape, or computer diskette) on request to the contact person listed in the preceding paragraph.

Electronic Access to This Document

You may view this document, as well as all other Department of Education documents published in the **Federal Register**, in text or Adobe Portable Document Format (PDF) on the Internet at either of the following sites: http://ocfo.ed.gov/fedreg.htm http://www.ed.gov/news.html.

To use the PDF you must have the Adobe Acrobat Reader, which is available free at either of the previous sites. If you have questions about using the PDF, call the U.S. Government Printing Office (GPO), toll free, at 1–888–293–6498; or in the Washington, DC, area at (202) 512–1530.

Note: The official version of this document is the document published in the **Federal Register**. Free Internet access to the official edition of the **Federal Register** and the Code of Federal Regulations is available on GPO Access at: http://www.access.gpo.gov/nara/index.html.

SUPPLEMENTARY INFORMATION: Pursuant to the Randolph-Sheppard Act (20 U.S.C. 107d-2(c)) (the Act), the Secretary publishes in the **Federal Register** a synopsis of each arbitration panel decision affecting the administration of vending facilities on Federal and other property.

Background

This dispute concerns the alleged violation by the U.S. Department of Labor in the termination of the contract of the West Virginia Department of Education and the Arts, Division of Rehabilitation Services, the State licensing agency (SLA), to operate a facility at the National Mine Health and Safety Academy in Beckley, West Virginia. A summary of the facts is as follows: On July 13, 1997, Mr. David Naylor, Director of the West Virginia Society for the Blind (Society), received a letter dated July 2, 1997, from Mr. William Och, the Contracting Officer for the National Mine Health and Safety Academy in Beckley. In the letter, which was entitled ''Notice of Partial Termination of Contract Number J2566023 for Food Service at the National Mine Health and Safety Academy, Beaver, WV,'' Mr. Och was informed that a substantial part of the Society's food service would be terminated effective July 7, 1997, for the remainder of the Federal fiscal year. The reason given for the termination was simply ''the Government's convenience.''

The SLA alleged that the contract was terminated with less than 1 business day's notice since the Fourth of July holiday in that year fell on Friday. The SLA further alleged that the actions taken by the U.S. Department of Labor, Mine Safety and Health Administration, in terminating the SLA's contract, violated the substantive and procedural provisions of the Act and implementing regulations.

The SLA filed a request for Federal arbitration dated July 15, 1997, which was received by the Department on July 24, 1997. While the complaint was under review by the Department, the parties were encouraged to meet and discuss the issues in an effort to reach an amicable settlement.

To that end, the parties successfully negotiated a resolution concerning two of the three issues in the SLA's original complaint. The two issues settled were: (1) That the SLA through its agent, the West Virginia Society for the Blind, and the Mine Safety and Health Administration would negotiate and enter into a contract providing for the operation of the cafeteria and vending facilities at the Academy. The contract would begin on or before November 1, 1997. The contract would provide for a term of 120 days with ongoing options for renewal on a 30-day basis. (2) For the duration of the previously-named contract, the Mine Safety and Health Administration would permit no other entity to provide food or vending services at the Academy unless the right to furnish those food or vending services would be first offered to the West Virginia Society for the Blind. If the Society was unable to provide those services, it would advise the Mine Safety and Health Administration.

The SLA filed a request to proceed with arbitration on the remaining issue in the complaint. A Federal arbitration hearing on this matter was held on September 18, 1998.

Arbitration Panel Decision

The central issue before the arbitration panel was whether the Mine Safety and Health Administration may seek bids for the operation of the food and vending facilities contract at the National Mine Health and Safety Academy while a contractor is already in place pursuant to the provisions of the Act (20 U.S.C. 107 *et seq.*) and the implementing regulations (34 CFR part 395).

The majority of the panel ruled that the sole purpose of the Act is to benefit blind persons through employment as entrepreneurs on all Federal property. Additionally, it is a requirement of the Act that a priority be given to blind vending facilities on all Federal property, and it is the obligation of every Federal department, agency, and instrumentality to ensure that one or more vending facilities is established on all Federal property.

In its complaint, the SLA argued that the Mine Safety and Health Administration, the respondent, was prohibited from seeking bids because of the priority provisions of the Act. Conversely, the Mine Safety and Health Administration responded that the Act and implementing regulations do not expressly prohibit it from soliciting bids.

After review of all evidence and arguments, the majority of the panel ruled that the Mine Safety and Health Administration was entitled to seek bids. The panel concluded that if the SLA submitted a bid to the Mine Safety and Health Administration, then the priority provisions of the Act and regulations would apply. The panel further ruled that the priority provisions of the Act do not affect the bidding process and are only pertinent after the bidding process has been completed. Specifically, the panel found that there is no requirement in the Act that precludes the contracting agency from soliciting for the food service operation merely because a blind vendor was previously operating the facility under a contract. Consequently, the Mine Safety and Health Administration is free to seek bids as long as it ultimately gives preferential treatment to a qualified blind vendor consistent with the Act.

Additionally, the panel ruled that if the SLA demonstrates that it can provide food service at comparable cost and of comparable high quality as that available from other providers, the Act's priority provisions would apply. Therefore, this would mean that at the end of the contract period with the SLA, if the SLA submits a new contract proposal that is within the competitive

range, the SLA is entitled to the contract. Further, the Mine Safety and Health Administration may negotiate directly with the SLA without opening the competitive bidding process.

One panel member dissented.

The views and opinions expressed by the panel do not necessarily represent the views and opinions of the U.S. Department of Education.

Dated: May 8, 2000.

Judith E. Heumann,

Assistant Secretary for Special Education and Rehabilitative Services.

[FR Doc. 00–11914 Filed 5–11–00; 8:45 am]

BILLING CODE 4000–01–P

DEPARTMENT OF ENERGY

Secretary of Energy Advisory Board; Notice of Open Meeting

AGENCY: Department of Energy.

SUMMARY: This notice announces a meeting of the Secretary of Energy Advisory Board's Openness Advisory Panel. The Federal Advisory Committee Act (Public Law 92–463, 86 Stat. 770), requires that agencies publish these notices in the **Federal Register** to allow for public participation.

NAME: Secretary of Energy Advisory Board—Openness Advisory Panel.

DATE: Tuesday, May 16, 2000, 9 a.m.–3:30 p.m.

ADDRESSES: U.S. Department of Energy, Program Review Center (Room 8E–089), Forrestal Building, 1000 Independence Avenue, SW., Washington, DC 20585.

Note: Members of the public are requested to contact the Office of the Secretary of Energy Advisory Board at (202) 586–7092 in advance of the meeting (if possible), to expedite their entry to the Forrestal Building on the day of the meeting. Public participation is welcomed.

FOR FURTHER INFORMATION CONTACT: Richard Burrow, Deputy Director, Secretary of Energy Advisory Board (AB–1), U.S. Department of Energy, 1000 Independence Avenue, SW., Washington, DC 20585, (202) 586–7092 or (202) 586–6279 (fax).

SUPPLEMENTARY INFORMATION: The purpose of the Openness Advisory Panel is to provide advice to the Secretary of Energy Advisory Board regarding the status and strategic direction of the Department's classification and declassification policies and programs, and other aspects of the Department's ongoing Openness Initiative. The Panel's work will help institutionalize the Department's Openness Initiative.

Tentative Agenda

The agenda for the May 16 meeting has not been finalized but will include detailed briefings and discussions on the history and accomplishments of DOE's Openness Initiative; the legal foundations and basis for openness; implementation status of the OAP Interim Report; and key issues and challenges in classification, declassification and records management. Members of the Public wishing to comment on issues before the Openness Advisory Panel will have an opportunity to address the Panel during the afternoon period for public comment.

Tentative Agenda

9–9:30 a.m. Opening Remarks & Introductions—Herbert Brown, Chairman Openness Advisory Panel
9:30–10:15 a.m. Briefing & Discussion: History and Accomplishments of DOE's Openness Initiative
10:15–10:30 a.m. Break
10:30–11:15 a.m. Briefing & Discussion: Legal Foundations and the Basis for Openness
11:15–12 p.m. Status Report: Implementation of OAP Interim Report Recommendations
12–1 p.m. Lunch Break
1–1:45 p.m. Briefing & Discussion: Issues and Challenges in Classification and Declassification
1:45–2:30 p.m. Briefing & Discussion: Issues and Challenges in Records Management
2:30–3:15 p.m. Working Session: Panel Organization, Scope, & Work Plans
3:15–3:30 p.m. Public Comment Period
3:30 p.m. Adjourn

This tentative agenda is subject to change. A final agenda will be available at the meeting.

Public Participation

In keeping with procedures, members of the public are welcome to observe the business of the Openness Advisory Panel and submit written comments or comment during the scheduled public comment periods. The Chairman of the Panel is empowered to conduct the meeting in a fashion that will, in the Chairman's judgment, facilitate the orderly conduct of business. During its meeting in Washington, DC the Panel welcomes public comment. Members of the public will be heard in the order in which they sign up at the beginning of the meeting. The Panel will make every effort to hear the views of all interested parties. You may submit written comments to Betsy Mullins, Executive Director, Secretary of Energy Advisory Board, AB–1, U.S. Department of Energy, 1000 Independence Avenue, SW., Washington, DC 20585. This notice is being published less than 15 days before the date of the meeting due to the late resolution of programmatic issues.

Minutes

A copy of the minutes and a transcript of the meeting will be made available for public review and copying approximately 30 days following the meeting at the Freedom of Information Public Reading Room, 1E–190 Forrestal Building, 1000 Independence Avenue, SW., Washington, DC, between 9 a.m. and 4 p.m., Monday through Friday except Federal holidays. Further information on the Secretary of Energy Advisory Board and its subcommittees may be found at the Board's web site, located at http://www.hr.doe.gov/seab.

Issued at Washington, DC, on May 9, 2000.

Rachel M. Samuel,

Deputy Advisory Committee Management Officer.

[FR Doc. 00–12114 Filed 5–11–00; 8:45 am]

BILLING CODE 6450–01–U

DEPARTMENT OF ENERGY

Secretary of Energy Advisory Board; Notice of Open Meeting

AGENCY: Department of Energy.

SUMMARY: This notice announces a meeting of the Secretary of Energy Advisory Board's National Ignition Facility Laser System Task Force. The Federal Advisory Committee Act (Public Law 92–463, 86 Stat. 770), requires that agencies publish these notices in the **Federal Register** to allow for public participation.

NAME: Secretary of Energy Advisory Board—National Ignition Facility Laser System Task Force.

DATES: Wednesday, May 17, 2000, 8:30 am–3 pm.

ADDRESSES: Lawrence Livermore National Laboratory (LLNL), Conference Room A, Building 123, 7000 East Avenue, Livermore, California 94551–0808.

Note: For their convenience, members of the public who plan to attend this open meeting are requested to contact Ms. Kathleen Moody of the LLNL Protocol Office in advance of the meeting in order to facilitate access to the meeting site. Ms. Moody may be reached at (925) 423–5948 or via e-mail at moody2@llnl.gov.

FOR FURTHER INFORMATION CONTACT: Betsy Mullins, Executive Director, or Richard Burrow, Deputy Director, Secretary of Energy Advisory Board (AB–1), U.S. Department of Energy,

1000 Independence Avenue, SW., Washington, D.C. 20585, (202) 586–7092 or (202) 586–6279 (fax).

SUPPLEMENTARY INFORMATION: The purpose of the NIF Task Force is to provide independent external advice and recommendations to the Secretary of Energy Advisory Board on the options to complete the National Ignition Facility (NIF) Project; to recommend the best technical course of action; and to review and assess the risks of successfully completing the NIF Project. The NIF Task Force will focus on the engineering and management aspects of the proposed method for accomplishing the assembly and installation of the NIF laser system. The Task Force's review will cover the full scope of assembly and installation and the ability, within the proposed approach, to achieve the cleanliness requirements established for the operation of the laser. The review will also address: (1) The engineering viability of the proposed assembly and activation method; (2) the assembly and installation cleanliness protocols; (3) the management structure; and (4) the adequacy of the cost estimating methodology.

Tentative Agenda

The agenda for the May 17 meeting has not been finalized. However, the meeting will include a series of detailed briefings and discussions on the cost estimates conducted in support of the NIF Rebaseline Plan. Members of the Public wishing to comment on issues before the NIF Laser System Task Force will have an opportunity to address the Task Force during the afternoon period for public comment. The final agenda will be available at the meeting.

Public Participation

In keeping with procedures, members of the public are welcome to observe the business of the NIF Task Force and submit written comments or comment during the scheduled public comment periods. The Chairman of the Task Force is empowered to conduct the meeting in a fashion that will, in the Chairman's judgment, facilitate the orderly conduct of business. During its meeting in Livermore, California, the Task Force welcomes public comment. Members of the public will be heard in the order in which they sign up at the beginning of the meeting. The Task Force will make every effort to hear the views of all interested parties. You may submit written comments to Betsy Mullins, Executive Director, Secretary of Energy Advisory Board, AB–1, U.S. Department of Energy, 1000 Independence Avenue, SW., Washington, D.C. 20585. This notice is being published less than 15 days before the date of the meeting due to the late resolution of programmatic issues.

Minutes

A copy of the minutes and a transcript of the meeting will be made available for public review and copying approximately 30 days following the meeting at the Freedom of Information Public Reading Room, 1E–190 Forrestal Building, 1000 Independence Avenue, SW., Washington, D.C., between 9:00 A.M. and 4:00 P.M., Monday through Friday except Federal holidays. Further information on the Secretary of Energy Advisory Board and its subcommittees may be found at the Board's web site, located at http://www.hr.doe.gov/seab.

Issued at Washington, DC, on May 9, 2000.

Rachel M. Samuel,

Deputy Advisory Committee Management Officer.

[FR Doc. 00–12115 Filed 5–11–00; 8:45 am]

BILLING CODE 6450–01–P

DEPARTMENT OF ENERGY

Federal Energy Regulatory Commission

[Docket No. RP99–507–000]

Amoco Energy Trading Corporation, Amoco Production Company, and Burlington Resources Oil & Gas Company v. El Paso Natural Gas Company; Notice of Informal Settlement Conference

May 8, 2000.

Pursuant to the Commission's order in *Amoco Energy Trading Corporation et al* v. *El Paso Natural Gas Company,* 89 FERC ¶ 61,165 (1999), Commission Staff held a Technical Conference on March 9, 2000, to discuss El Paso's February 9, 2000 proposal to change its current allocation methods and all issues related to the allocation of receipt and delivery points on El Paso's system.

At a subsequent technical conference, the participants reached consensus to attend an informal settlement conference. The participants also agreed that the Director of the Commission's Dispute Resolution Service (Director) attend the conference to facilitate the settlement negotiations. The parties also agreed that a party could provide to the Director, in advance of the informal settlement conference, a statement of the issues or business interests that they believed needed to be considered. Accordingly, the informal settlement conference will begin with a discussion regarding the settlement process, followed by a discussion of the statements provided to the Director.

The informal settlement conference will be held on May 16, 2000, at the Federal Energy Regulatory Commission located at 888 First Street, NE., Washington, DC. The conference will begin at 10 a.m. in Room 3M–2A/2B.

All interested parties in the above dockets are requested to attend the informal settlement conference. If a party has any questions with respect to the conference, please call Richard Miles, the Director of the Dispute Resolution Service. His telephone number is 1–877 FERC ADR (337–2237) or 202–208–0702 and his e-mail address is *richard.miles@ferc.fed.us.*

David P. Boergers,

Secretary.

[FR Doc. 00–11936 Filed 5–11–00; 8:45 am]

BILLING CODE 6717–01–M

DEPARTMENT OF ENERGY

Federal Energy Regulatory Commission

[Docket No. ER00–2117–000]

ANP Bellingham Energy Company; Notice of Issuance of Order

May 8, 2000.

ANP Bellingham Energy Company (ANP Bellingham) submitted for filling a rate schedule under which ANP Bellingham will engage in wholesale electric power and energy transactions as a marketer. ANP Bellingham also requested waiver of various Commission regulations. In particular, ANP Bellingham requested that the Commission grant blanket approval under 18 CFR Part 34 of all future issuances of securities and assumptions of liability by ANP Bellingham.

On May 4, 2000, pursuant to delegated authority, the Director, Division of Corporate Applications, Office of Markets, Tariffs and Rates, granted requests for blanket approval under Part 34, subject to the following:

Within thirty days of the date of the order, any person desiring to be heard or to protest the blanket approval of issuances of securities or assumptions of liability by ANP Bellingham should file a motion to intervene or protest with the Federal Energy Regulatory Commission, 888 First Street, NE, Washington, DC 20426, in accordance with Rules 211 and 214 of the Commission's Rules of Practice and Procedure (18 CFR 385.211 and 385.214).

Absent a request for hearing within this period, ANP Bellingham is authorized to issue securities and

assume obligations or liabilities as a guarantor, indorser, surety, or otherwise in respect of any security of another person; provided that such issuance or assumption is for some lawful object within the corporate purposes of the applicant, and compatible with the public interest, and is reasonable necessary or appropriate for such purposes.

The Commission reserves the right to require a further showing that neither public nor private interests will be adversely affected by continued approval of ANP Bellingham's issuances of securities or assumptions of liability.

Notice is hereby given that the deadline for filing motions to intervene or protests, as set forth above, is June 5, 2000.

Copies of the full text of the Order are available from the Commission's Public Reference Branch, 888 First Street, NE, Washington, DC 20426. The Order may also be viewed on the Internet at *http://www.ferc.fed.us/online/rims.htm* (call 202–208–2222 for assistance).

David P. Boergers,

Secretary.

[FR Doc. 00–11932 Filed 5–11–00; 8:45 am]

BILLING CODE 6717–01–M

DEPARTMENT OF ENERGY

Federal Energy Regulatory Commission

[Docket No. ER00–2118–000]

ANP Blackstone Energy Company; Notice of Issuance of Order

May 9, 2000.

ANP Blackstone Energy Company (ANP Blackstone) submitted for filing a rate schedule under which ANP Blackstone will engage in wholesale electric power and energy transactions as a marketer. ANP Blackstone also requested waiver of various Commission regulations. In particular, ANP Blackstone requested that the Commission grant blanket approval under 18 CFR part 34 of all future issuances of securities and assumptions of liability by ANP Blackstone.

On May 4, 2000, pursuant to delegated authority, the Director, Division of Corporate Applications, Office of Markets, Tariffs and Rates, granted requests for blanket approval under part 34, subject to the following:

Within thirty days of the date of the order, any person desiring to be heard or to protest the blanket approval of issuances of securities or assumptions of liability by ANP Blackstone should file a motion to intervene or protest with the Federal Energy Regulatory Commission, 888 First Street, NE, Washington, DC 20426, in accordance with Rules 211 and 214 of the Commission's Rules of Practice and Procedure (18 CFR 385.211 and 385.214).

Absent a request for hearing within this period, ANP Blackstone is authorized to issue securities and assume obligations or liabilities as a guarantor, indorser, surety, or otherwise in respect of any security of another person; provided that such issuance or assumption is for some lawful object within the corporate purposes of the applicant, and compatible with the public interest, and is reasonably necessary or appropriate for such purposes.

The Commission reserves the right to require a further showing that neither public nor private interests will be adversely affected by continued approval of ANP Blackstone's issuances of securities or assumptions of liability.

Notice is hereby given that the deadline for filing motions to intervene or protests, as set forth above, is June 5, 2000.

Copies of the full text of the Order are available from the Commission's Public Reference Branch, 888 First Street, N.E., Washington, D.C. 20426. The Order may also be viewed on the Internet at *http://www.ferc.fed.us/online/rims.htm* (call 202–208–2222 for assistance).

David P. Boergers,

Secretary.

[FR Doc. 00–11957 Filed 5–11–00; 8:45 am]

BILLING CODE 6717–01–M

DEPARTMENT OF ENERGY

Federal Energy Regulatory Commission

[Docket No. ER00–1831–000, et al.]

CinCap VII, LLC and CinCap VIII, LLC; Notice of Issuance of Order

May 8, 2000.

CinCap VII, LLC (CinCap VII) and CinCap VIII, LLC (CinCap VIII) submitted for filing rate schedules under which CinCap VII and CinCap VIII will engage in wholesale electric power and energy transactions as a marketer. CinCap VII and CinCap VIII also requested waiver of various Commission regulations. In particular, CinCap VII and CinCap VIII requested that the Commission grant blanket approval under 18 CFR Part 34 of all future issuances of securities and assumptions of liability by CinCap VII and CinCap VIII.

On May 4, 2000, pursuant to delegated authority, the Director, Division of Corporate Applications, Office of Markets, Tariffs and Rates, granted requests for blanket approval under Part 34, subject to the following:

Within thirty days of the date of the order, any person desiring to be heard or to protest the blanket approval of issuances of securities or assumptions of liability by CinCap VII or Cincap VIII should file a motion to intervene or protest with the Federal Energy Regulatory Commission, 888 First Street, N.E., Washington, D.C. 20426, in accordance with Rules 211 and 214 of the Commission's Rules of Practice and Procedure (18 CFR 385.211 and 385.214).

Absent a request for hearing within this period, CinCap VII and CinCap VIII are authorized to issue securities and assume obligations or liabilities as a guarantor, indorser, surety, or otherwise in respect of any security of another person; provided that such issuance or assumption is for some lawful object within the corporate purposes of the applicants, and compatible with the public interest, and is reasonably necessary or appropriate for such purposes.

The Commission reserves the right to require a further showing that neither public nor private interests will be adversely affected by continued approval of CinCap VII's or CinCap VIII's issuances of securities or assumptions of liability.

Notice is hereby given that the deadline for filing motions to intervene or protests, as set forth above, is June 5, 2000.

Copies of the full text of the Order are available from the Commission's Public Reference Branch, 888 First Street, N.E., Washington, D.C. 20426. The Order may also be viewed on the Internet at *http://www.ferc.fed.us/online/rims.htm* (call 202–208–2222 for assistance).

David P. Boergers,

Secretary.

[FR Doc. 00–11927 Filed 5–11–00; 8:45 am]

BILLING CODE 6717–01–M

DEPARTMENT OF ENERGY

Federal Energy Regulatory Commission

[Docket Nos. Nos. ER00–1782–000 and ER00–1782–001]

Duke Energy Trenton, LLC; Notice of Issuance of Order

May 8, 2000.

Duke Energy Trenton, LLC (Duke Trenton) submitted for filing a rate

schedule under which Duke Trenton will engage in wholesale electric power and energy transactions as a marketer. Duke Trenton also requested waiver of various Commission regulations. In particular Duke Trenton requested that the Commission grant blanket approval under 18 CFR part 34 of all future issuances of securities and assumptions of liability by Duke Trenton.

On May 5, 2000, pursuant to delegated authority, the Director, Division Of Corporate Applications, Office of Markets, Tariffs and Rates, granted requests for blanket approval under Part 34, subject to the following:

Within thirty days of the date of order, any person desiring to be heard or to protest the blanket approval of issuances of securities or assumptions of liability by Duke Trenton should file a motion to intervene or protest with the Federal Energy Regulatory Commission, 888 First Street, NE., Washington, DC 20426, in accordance with Rules 211 and 214 of the Commission's Rules of Practice and Procedure (18 CFR 385.211 and 385.214).

Absent a request for hearing within this period, Duke Trenton is authorized to issue securities and assume obligations or liabilities as a guarantor, indorser, surety, or otherwise in respect of any security of another person; provided that such issuance or assumption is for some lawful object within the corporate purposes of the applicant, and compatible with the public interest, and is reasonably necessary or appropriate for such purposes.

The Commission reserves the right to require a further showing that neither public nor private interests will be adversely affected by continued approval of Duke Trenton's issuances of securities or assumptions of liability.

Notice is hereby give that the deadline for filing motions to intervene or protests as set forth above, is June 5, 2000.

Copies of the full text of the Order are available from the Commission's Public Reference Branch, 888 First Street, NE., Washington, DC 20426. The Order may also be viewed on the Internet at *http://www.ferc.fed.us/online/rims.htm* (call 202–208–2222 for assistance).

David P. Boergers,

Secretary.

[FR Doc. 00–11925 Filed 5–11–00; 8:45 am]

BILLING CODE 6717–01–M

DEPARTMENT OF ENERGY

Federal Energy Regulatory Commission

[Docket No. ER00–1783–000, et al.]

Duke Energy Vermillion, LLC and Duke Energy Madison, LLC; Notice of Issuance of Order

May 8, 2000.

Duke Energy Vermillion, LLC (Duke Vermillion) and Duke Energy Madison, LLC (Duke Madison) submitted for filing rate schedules under which Duke Vermillion and Duke Madison will engage in wholesale electric power and energy transactions as marketers. Duke Vermillion and Duke Madison also requested waiver of various Commission regulations. In particular, Duke Vermillion and Duke Madison requested the Commission grant blanket approval under 18 CFR part 34 of all future issuances of securities and assumptions of liability by Duke Vermillion or Duke Madison.

On May 4, 2000, pursuant to delegated authority, the Director, Division of Corporate Applications, Office of Markets, Tariffs and Rates, granted requests for blanket approval under Part 34, subject to the following:

Within thirty days of the date of the order, any person desiring to be heard or to protest the blanket approval of issuances of securities or assumptions of liability by Duke Vermillion or Duke Madison should file a motion to intervene or protest with the Federal Energy Regulatory Commission, 888 First Street, NE, Washington, DC 20426, in accordance with Rules 211 and 214 of the Commission's Rules of Practice and Procedure (18 CFR 385.211 and 385.214).

Absent a request for hearing within this period, Duke Vermillion and Duke Madison are authorized to issue securities and assume obligations or liabilities as a guarantor, indorser, surety, or otherwise in respect of any security of another person; provided that such issuance or assumption is for some lawful object within the corporate purposes of the applicants, and compatible with the public interest, and is reasonably necessary or appropriate for such purposes.

The Commission reserves the right to require a further showing that neither public nor private interests will be adversely affected by continued approval of Duke Vermillion's or Duke Madison's issuances of securities or assumptions of liability.

Notice is hereby given that the deadline for filing motions to intervene or protests, as set forth above, is June 5, 2000.

Copies of the full text of the Order are available from the Commission's Public Reference Branch, 888 First Street, NE, Washington, DC 20426. The Order may also be viewed on the Internet at *http://www.ferc.fed.us/online/rims.htm* (call 202–208–2222 for assistance).

David P. Boergers,

Secretary.

[FR Doc. 00–11926 Filed 5–11–00; 8:45 am]

BILLING CODE 6717–01–M

DEPARTMENT OF ENERGY

Federal Energy Regulatory Commission

[Docket No. ER00–1952–000]

Indeck Colorado, LLC; Notice of Issuance of Order

May 8, 2000.

Indeck Colorado, LLC (Indeck Colorado) submitted for filing a rate schedule under which Indeck Colorado will engage in wholesale electric power and energy transactions as a marketer. Indeck Colorado also requested waiver of various Commission regulations. In particular, Indeck Colorado requested that the Commission grant blanket approval under 18 CFR Part 34 of all future issuances of securities and assumptions of liability by Indeck Colorado.

On May 5, 2000, pursuant to delegated authority, the Director, Division of Corporate Applications, Office of Markets, Tariffs and Rates, granted requests for blanket approval under Part 34, subject to the following:

Within thirty days of the date of the order, any person desiring to be heard or to protest the blanket approval of issuances of securities or assumptions of liability by Indeck Colorado should file a motion to intervene or protest with the Federal Energy Regulatory Commission, 888 First Street, N.E., Washington, D.C. 20426, in accordance with Rules 211 and 214 of the Commission's Rules of Practice and Procedure (18 CFR 385.211 and 385.214).

Absent a request for hearing within this period, Indeck Colorado is authorized to issue securities and assume obligations or liabilities as a guarantor, indorser, surety, or otherwise in respect of any security of another person; provided that such issuance or assumption is for some lawful object within the corporate purposes of the applicant, and compatible with the public interest, and is reasonably

necessary or appropriate for such purposes.

The Commission reserves the right to require a further showing that neither public nor private interests will be adversely affected by continued approval of Indeck Colorado's issuances of securities or assumptions of liability.

Notice is hereby given that the deadline for filing motions to intervene or protests, as set forth above, is June 5, 2000.

Copies of the full text of the Order are available from the Commission's Public Reference Branch, 888 First Street, N.E., Washington, D.C. 20426. The Order may also be viewed on the Internet at *http://www.ferc.fed.us/online/rims.htm* (call 202–208–2222 for assistance).

David P. Boergers,

Secretary.

[FR Doc. 00–11928 Filed 5–11–00; 8:45 am]

BILLING CODE 6717–01–M

DEPARTMENT OF ENERGY

Federal Energy Regulatory Commission

[Docket No. ER00–2069–000]

Indeck-Rockford, L.L.C.; Notice of Issuance of Order

May 8, 2000.

Indeck-Rockford, L.L.C. (Indeck-Rockford) submitted for filing a rate schedule under which Indeck-Rockford will engage in wholesale electric power and energy transactions as a marketer. Indeck-Rockford also requested waiver of various Commission regulations. In particular, Indeck-Rockford requested that the Commission grant blanket approval under 18 CFR Part 34 of all future issuances of securities and assumptions of liability by Indeck-Rockford.

On May 3, 2000, pursuant to delegated authority, the Director, Division of Corporate Applications, Office of Markets, Tariffs and Rates, granted requests for blanket approval under Part 34, subject to the following:

Within thirty days of the date of the order, any person desiring to be heard or to protest the blanket approval of issuances of securities or assumptions of liability by Indeck-Rockford should file a motion to intervene or protest with the Federal Energy Regulatory Commission, 888 First Street, N.E., Washington, D.C. 20426, in accordance with Rules 211 and 214 of the Commission's Rules of Practice and Procedure (18 CFR 385.211 and 385.214).

Absent a request for hearing within this period, Indeck-Rockford is authorized to issue securities and assume obligations or liabilities as a guarantor, indorser, surety, or otherwise in respect of any security of another person; provided that such issuance or assumption is for some lawful object within the corporate purposes of the applicant, and compatible with the public interest, and is reasonably necessary or appropriate for such purposes.

The Commission reserves the right to require a further showing that neither public nor private interests will be adversely affected by continued approval of Indeck-Rockford's issuances of securities or assumptions of liability.

Notice is hereby given that the deadline for filing motions to intervene or protests, as set forth above, is June 2, 2000.

Copies of the full text of the Order are available from the Commission's Public Reference Branch, 888 First Street, N.E., Washington, D.C. 20426. The Order may also be viewed on the Internet at *http://www.ferc.fed.us/online/rims.htm* (call 202–208–2222 for assistance).

David P. Boergers,

Secretary.

[FR Doc. 00–11931 Filed 5–11–00; 8:45 am]

BILLING CODE 6717–01–M

DEPARTMENT OF ENERGY

Federal Energy Regulatory Commission

[Docket No. CP00–232–000]

Iroquois Gas Transmission System, L.P.; Notice of Application

May 8, 2000.

Take notice that on April 28, 2000, Iroquois Gas Transmission System, L.P. (Iroquois), One Corporate Drive, Suite 600, Shelton, Connecticut 06484, filed in Docket No. CP00–232–000 an application pursuant to the provisions of Section 7 of the Natural Gas Act for a certificate of public convenience and necessity authorizing the construction and operation of pipeline and compression facilities for the transportation of natural gas, all as more fully set forth in the application which is on file with the Commission and open to public inspection. This filing may be viewed on the web at *http://www.ferc.fed.us/online/rims.htm* (call 202–208–2222 for assistance).

Specifically, Iroquois seeks to construct and operate: (1) approximately 30.3 miles of 24-inch pipeline from Northport, New York to the Bronx, New York; (2) a new 20,000 horsepower (HP) compressor station at Boonville, New York; (3) a new 20,000 HP compressor station at Dover, New York; (4) a 3,300 HP increase at the existing Wright compressor station; (5) an 11,000 HP increase at the existing Croghan compressor station; (6) cooling units at the existing Wright and Athens compressor stations; (7) a new point of interconnection with the facilities of Consolidated Edison Company of New York, Inc. in the Bronx, New York; and (8) other appurtenant facilities. Iroquois states that the estimated cost of the proposed facilities is $170.8 million. Iroquois proposes to place the facilities in service in two phases. The first phase would transport up to 70,000 dekatherms per day beginning April 1, 2002 and the remaining facilities would be placed in service on November 1, 2002.

Iroquois proposes to utilize the proposed facilities to transport about 220,000 to 230,000 dekatherms per day. Iroquois conducted an open season between November 15 and December 17, 1999 and has executed precedent agreements totaling 561,470 dekatherms per day with five shippers.[1] Iroquois states that although this amount is greater that the capacity of the proposed facilities, it has the ability under the precedent agreements to pro rate the capacity to conform with the proposed facilities' capacity. According to Iroquois, a decision over the need to proration capacity will be made on or about October 15, 2000.

Iroquois proposes to provide transportation service under its Part 284, Subpart G blanket certificate pursuant to Rate Schedule RTS of its FERC Gas Tariff, First Revised Volume No. 1. Iroquois states that its proposal is consistent with the Commission's Certificate Policy Statement.[2] Iroquois proposes to roll in the costs of the proposed facilities, maintaining that its existing customers will not subsidize the proposed facilities. Further, Iroquois states that its proposal will not have any substantial adverse impacts. Finally, Iroquois asserts that its proposal provides numerous system-wide benefits that can be balanced against any adverse impacts.

Any questions regarding the application should be directed to Jeffrey A. Bruner, Vice President, General Counsel and Secretary for Iroquois, One Corporate Drive, Suite 600, Shelton, Connecticut 06484 at 203–925–7200, or

[1] Concurrent with the open season, Iroquois solicited its existing customers to permanently release capacity for use by the expansion shippers. This resulted in the release of 13,115 dekatherms per day of released capacity for use in this project

[2] *See,* 88 FERC, ¶ 61,227 (1999), clarification 90 FERC ¶ 61,128 (2000).

Beth L. Webb, attorney for Iroquois, Dickstein Shapiro Morin & Oshinsky, LLP, 2101 L Street NW, Washington, DC 20037 at 202–785–9700.

Any person desiring to be heard or to make any protest with reference to said application should on or before May 30, 2000, file with the Federal Energy Regulatory Commission, 888 First Street NE, Washington, DC 20426, a motion to intervene or protest in accordance with the requirements of the Commission's Rules of Practice and Procedure (18 CFR 385.211 and 385.214) and the regulations under the NGSA (18 CFR 157.10). All protests filed with the Commission will be considered by it in determining the appropriate action to be taken but will not serve to make the protestants parties to the proceeding. Any person wishing to become a party in any proceeding must file a motion to intervene in accordance with the Commission's rules.

A person obtaining intervenor status will be placed on the service list maintained by the Secretary of the Commission and will receive copies of all documents issued by the Commission, filed by the applicant, or filed by all other intervenors. An intervenor can file for rehearing of any Commission order and can petition for court review of any such order. However, an intervenor must serve copies of comments or any other filing it makes with the Commission to every other intervenor in the proceeding, as well as filing an original and 14 copies with the Commission.

A person does not have to intervene, however, in order to have comments considered. A person, instead, may submit two copies of such comments to the Secretary of the Commission. Commenters will be placed on the Commission's environmental mailing list, will receive copies of environmental documents, and will be able to participate in meetings associated with the Commission's environmental review process. Commenters will not be required to serve copies of filed documents on all other parties. However, commenters will not receive copies of all documents filed by other parties or issued by the Commission, and will not have the right to seek rehearing or appeal the Commission's final order to a Federal court.

The Commission will consider all comments and concerns equally, whether filed by commenters of those requesting intervenor status.

Take further notice that, pursuant to the authority contained in and subject to the jurisdiction conferred upon the Commission by Sections 7 and 15 of the NGA and the Commission's Rules of Practice and Procedure, a hearing will be held without further notice before the Commission or its designee on this application if no motion to intervene is filed within the time required herein, if the Commission on its own review of the matter finds that the proposal is required by the public convenience and necessity. If a motion for leave to intervene is timely filed, or if the Commission on its own motion believes that a formal hearing is required, further notice of such hearing will be duly given.

Under the procedure provided for, unless otherwise advised, it will be unnecessary for Iroquois to appear or to be represented at the hearing.

David P. Boergers,

Secretary.

[FR Doc. 00–11924 Filed 5–11–00; 8:45 am]

BILLING CODE 6717–01–M

DEPARTMENT OF ENERGY

Federal Energy Regulatory Commission

[Docket Nos. ER00–1981–000 and ER00–1982–000]

Panda Gila River, L.P. and Panda Oneta Power, L.P.; Notice of issuance of Order

May 8, 2000.

Panda Gila River, L.P. (Panda Gila) and Panda Oneta Power, L.P. (Panda Oneta) submitted for filing rate schedules under which Panda Gila and Panda Oneta will engage in wholesale electric power and energy transactions as marketers. Panda Gila and Panda Oneta also requested waiver of various Commission regulations. In particular, Panda Gila and Panda Oneta requested that the Commission grant blanket approval under 18 CFR Part 34 of all issuances of securities and assumptions of liability by Panda Gila or Panda Oneta.

On May 3, 2000, pursuant to delegated authority, the Director, Division of Corporate Applications, Office of Markets, Tariffs and Rates, granted requests for blanket approval under Part 34, subject to the following:

Within thirty days of the date of the order, any person desiring to be heard or to protest the blanket approval of issuances of securities or assumptions of liability by Panda Gila or Panda Oneta should file a motion to intervene or protest with the Federal Energy Regulatory Commission, 888 First Street, N.E., Washington, D.C. 20426, in accordance with Rules 211 and 214 of the Commission's Rules of Practice and Procedure (18 CFR 385.211 and 385.214).

Absent a request for hearing within this period, Panda Gila and Panda Oneta are authorized to issue securities and assume obligations or liabilities as a guarantor, endorser, surety, or otherwise in respect of any security of another person; provided that such issuance or assumption is for some lawful object within the corporate purposes of the applicant, and compatible with the public interest, and is reasonably necessary or appropriate for such purposes.

The Commission reserves the right to require a further showing that neither public nor private interests will be adversely affected by continued approval of Panda Gila's or Panda Oneta's issuances of securities or assumptions of liability.

Notice is hereby given that the deadline for filing motions to intervene or protests, as set forth above, is June 2, 2000.

Copies of the full text of the Order are available from the Commission's Public Reference Branch, 888 First Street, N.E., Washington, D.C. 20426. The Order may also be viewed on the Internet at *http://www.ferc.fed.us/online/rims.htm* (call 202–208–2222 for assistance).

David P. Boergers,

Secretary.

[FR Doc. 00–11930 Filed 5–11–00; 8:45 am]

BILLING CODE 6717–01–M

DEPARTMENT OF ENERGY

Federal Energy Regulatory Commission

[Docket No. ER00–2177–000]

Rainy River Energy Corporation; Notice of Issuance of Order

May 8, 2000.

Rainy River Energy Corporation (Rainy River) submitted for filing a rate schedule under which Rainy River will engage in wholesale electric power and energy transactions as a marketer. Rainy River also requested waiver of various Commission regulations. In particular, Rainy River requested that the Commission grant blanket approval under 18 CFR Part 34 of all future issuances of securities and assumptions of liability by Rainy River.

On May 4, 2000, pursuant to delegated authority, the Director, Division of Corporate Applications, Office of Markets, Tariffs and Rates, granted requests for blanket approval under Part 34, subject to the following:

Within thirty days of the date of the order, any person desiring to be heard or to protest the blanket approval of issuances of securities or assumptions of liability by Rainy River should file a motion to intervene or protest with the Federal Energy Regulatory Commission, 888 First Street, N.E., Washington, D.C. 20426, in accordance with Rules 211 and 214 of the Commission's Rules of Practice and Procedure (18 CFR 385.211 and 385.214).

Absent a request for hearing within this period, Rainy River is authorized to issue securities and assume obligations or liabilities as a guarantor, indorser, surety, or otherwise in respect of any security of another person; provided that such issuance of assumption is for some lawful object within the corporate purposes of the applicant, and compatible with the public interest, and is reasonably necessary or appropriate for such purposes.

The Commission reserves the right to require a further showing that neither public nor private interests will be adversely affected by continued approval of Rainy River's issuances of securities or assumptions of liability.

Notice is hereby given that the deadline for filing motions to intervene or protests, as set forth above, is June 5, 2000.

Copies of the full text of the Order are available from the Commission's Public Reference Branch, 888 First Street, N.E., Washington, D.C. 20426. The Order may also be viewed on the Internet at *http://www.ferc.fed.us/online/rims.htm* (call 202–208–2222 for assistance).

David P. Boergers,

Secretary.

[FR Doc. 00–11933 Filed 5–11–00; 8:45 am]

BILLING CODE 6717–01–M

DEPARTMENT OF ENERGY

Federal Energy Regulatory Commission

[Docket No. ER00–1928–000]

Western New York Wind Corp; Notice of Issuance of Order

May 8, 2000.

Western New York Wind Corp. (WNYWC) submitted for filing a rate schedule under which WNYWC will engage in wholesale electric power and energy transactions as a marketer. WNYWC also requested waiver of various Commission regulations. In particular, WNYWC requested that the Commission grant blanket approval under 18 CFR Part 34 of all future issuances of securities and assumptions of liability by WNYWC.

On May 4, 2000, pursuant to delegated authority, the Director, Division of Corporate Applications, Office of Markets, Tariffs and Rates, granted requests for blanket approval under Part 34, subject to the following:

Within thirty days of the date of the order, any person desiring to be heard or to protest the blanket approval of issuances of securities or assumptions of liability by WNYWC should file a motion to intervene or protest with the Federal Energy Regulatory Commission, 888 First Street, N.E., Washington, D.C. 20426, in accordance with Rules 211 and 214 of the Commission's Rules of Practice and Procedure (18 CFR 385.211 and 385.214).

Absent a request for hearing within this period, WNYWC is authorized to issue securities and assume obligations or liabilities as a guarantor, indorser, surety, or otherwise in respect of any security of another person; provided that such issuance or assumption is for some lawful object within the corporate purpose of the applicant, and compatible with the public interest, and is reasonably necessary or appropriate for such purposes.

The Commission reserves the right to require a further showing that neither public nor private interests will be adversely affected by continued approval of WNYWC's issuances of securities or assumptions of liability.

Notice is hereby given that the deadline for filing motions to intervene or protests, as set forth above, is June 5, 2000.

Copies of the full text of the Order are available from the Commission's Public Reference Branch, 888 First Street, N.E., Washington, D.C. 20426. The Order may also be viewed on the Internet at *http://www.ferc.fed.us/online/rims.htm* (call 202–208–2222 for assistance).

David P. Boergers,

Secretary.

[FR Doc. 00–11929 Filed 5–11–00; 8:45 am]

BILLING CODE 6717–01–M

DEPARTMENT OF ENERGY

Federal Energy Regulatory Commission

Notice of Non-Project Use of Project Lands and Waters and Soliciting Comments, Motions to Intervene, and Protests

May 8, 2000.

Take notice that the following application has been filed with the Commission and is available for public inspection:

a. *Application Type:* Non-Project Use of Project Lands and Waters.

b. *Project No:* 2232–399.

c. *Date Filed:* October 20, 1999.

d. *Applicant:* Duke Energy Corporation.

e. *Name of Project:* Catawba-Wateree Hydroelectric Project.

f. *Location:* On Lake Hickory at Anchors Landing Subdivision, in Caldwell County, North Carolina. The project does not utilize federal or tribal lands.

g. *Filed Pursuant to:* Federal Power Act, 16 U.S.C. 791(a)–825(r).

h. *Applicant Contact:* Mr. E.M. Oakley, Duke Energy Corporation P.O. Box 1006 (EC12Y), Charlotte, NC 28201–1006 (704) 382–5778.

i. *FERC Contact:* Any questions on this notice should be addressed to Brian Romanek at (202) 219–3076, or e-mail address: brian.romanek@ferc.fed.us.

j. *Deadline for filing comments and or motions:* June 9, 2000.

All documents (original and eight copies) should be filed with: David P. Boergers, Secretary, Federal Energy Regulatory Commission, 888 First Street, N.E., Washington, DC 20426.

Please include the project number (2232–399) on any comments or motions filed.

k. *Description of Proposal:* Duke Energy Corporation proposes to lease to Waterfront Properties 1.54 acres of project land for the construction of 65 boat slips. The boat slips would provide access to the reservoir for residents of the Anchors Landing Subdivision. No dredging is proposed.

l. *Locations of the Application:* A copy of the application is available for inspection and reproduction at the Commission's Public Reference Room, located at 888 First Street, NE, Room 2A, Washington, D.C. 20426, or by calling (202) 208–1371. This filing may be viewed on http://www.ferc.fed.us/online/rims.htm (call (202) 208–2222 for assistance). A copy is also available for inspection and reproduction at the address in item h above.

m. Individuals desiring to be included on the Commission's mailing list should so indicate by writing to the Secretary of the Commission:

Comments, Protests, or Motions to Intervene—Anyone may submit comments, a protest, or a motion to intervene in accordance with the requirements of Rules of Practice and Procedure, 18 CFR 385.210, .211, .214. In determining the appropriate action to take, the Commission will consider all protests or other comments filed, but only those who file a motion to

intervene in accordance with the Commission's Rules may become a party to the proceeding. Any comments, protests, or motions to intervene must be received on or before the specified comment date for the particular application.

Filing and Service of Responsive Documents—any filings must bear in all capital letters the title ''COMMENTS,'' ''RECOMMENDATIONS FOR TERMS AND CONDITIONS,'' ''PROTEST,'' OR ''MOTION TO INTERVENE,'' as applicable, and the Project Number of the particular application to which the filing refers. Any of the above-named documents must be filed by providing the original and the number of copies provided by the Commission's regulations to: The Secretary, Federal Energy Regulatory Commission, 888 First Street, N.E., Washington, D.C. 20426. A copy of any motion to intervene must also be served upon each representative of the Applicant specified in the particular application.

Agency Comments—Federal, state, and local agencies are invited to file comments on the described application. A copy of the application may be obtained by agencies directly from the Applicant. If an agency does not file comments within the time specified for filing comments, it will be presumed to have no comments. One copy of an agency's comments must also be sent to the Applicant's representatives.

David P. Boergers,

Secretary.

[FR Doc. 00–11934 Filed 5–11–00; 8:45 am]

BILLING CODE 6717–01–M

DEPARTMENT OF ENERGY

Federal Energy Regulatory Commission

Notice of Application Accepted for Filing and Soliciting Motions To Intervene and Protests

May 8, 2000.

Take notice that the following hydroelectric application has been filed with the Commission and is available for public inspection:

a. *Type of Application:* Preliminary Permit.

b. *Project No.:* P–11822–000.

c. *Date filed:* September 27, 1999.

d. *Applicant:* Universal Electric Power Corp.

e. *Name of Project:* Pishkun Dam Project.

f. *Location:* At the Bureau of Reclamation's Pishkun Dam, on Deep Creek, a tributary to the Sun River, near the Town of Choteau, Teton County, Montana.

g. *Filed Pursuant to:* Federal Power Act 16 U.S.C. 791 (a)–825(r).

h. *Applicant Contact:* Mr. Gregory Feltenberger, Universal Electric Power Corp., 1145 Highbrook Street, Akron, Ohio 44301, (330) 535–7115.

i. *FERC Contact:* Michael Spencer, Michael.Spencer@FERC.fed.us, (202) 219–2846.

j. *Deadline for filing motions to intervene and protest:* 60 days from the issuance date of this notice.

All documents (original and eight copies) should be filed with: David P. Boergers, Secretary, Federal Energy Regulatory Commission, 888 First Street, NE, Washington, DC 20426.

The Commission's Rules and Practice and Procedure require all intervenors filing documents with the Commission to serve a copy of that document on each person whose name appears on the official service list for the project. Further, if an intervenor files comments or documents with the Commission relating to the merits of an issue that may affect the responsibilities of a particular resource agency, they must also serve a copy of the document on that resource agency.

k. *Description of Project:* The proposed project would utilize the Bureau of Reclamation's Pishkun Dam and consist of the following: (1) A 72-inch-diameter, 80-foot-long steel penstock, constructed in the existing outlet works; (2) a powerhouse containing one generating unit with a capacity of 0.5 kW and an estimated average annual generation of 2.2 GWh; and (3) a 15-mile-long transmission line.

l. *Locations of the application:* A copy of the application is available for inspection and reproduction at the Commission's Public Reference and Files Maintenance Branch, located at 888 First Street, N.E., Room 2A, Washington, D.C. 20426, or by calling (202) 291–1371. This filing may be viewed on the web at http://www.ferc.fed.us/online/rims.htm (Call (202) 208–2222 for assistance). A copy is also available for inspection and reproduction at the address in item h above.

Preliminary Permit—Anyone desiring to file a competing application for preliminary permit for a proposed project must submit the competing application itself, or a notice of intent to file such an application, to the Commission on or before the specified comment date for the particular application (see 18 CFR 4.36). Submission of a timely notice of intent allows an interested person to file the competing preliminary permit application no later than 30 days after the specified comment date for the particular application. A competing preliminary permit application must conform with 18 CFR 4.30(b) and 4.36.

Preliminary Permit—Any qualified development applicant desiring to file a competing development application must submit to the Commission, on or before a specified comment date for the particular application, either a competing development application or a notice of intent to file such an application. Submission of a timely notice of intent to file a development application allows an interested person to file the competing application no later than 120 days after the specified comment date for the particular application. A competing license application must conform with 18 CFR 4.30(b) and 4.36.

Notice of intent—A notice of intent must specify the exact name, business address, and telephone number of the prospective applicant, and must include an unequivocal statement of intent to submit, if such an application may be filed, either a preliminary permit application of a development application (specify which type of application). A notice of intent must be served on the applicant(s) named in this public notice.

Proposed Scope of Studies under Permit—A preliminary permit, issued, does not authorize construction. The term of the proposed preliminary permit would be 36 months. The work proposed under the preliminary permit would include economic analysis, preparation of preliminary engineering plans, and a study of environmental impacts. Based on the results of these studies, the Applicant would decide whether to proceed with the preparation of a development application to construct and operate the project.

Comments, Protests, or Motions to Intervene—Anyone may submit comments, a protest, or a motion to intervene in accordance with the requirements of Rules of Practice and Procedure, 18 CFR 385.210, .211, .214. In determining the appropriate action to take, the Commission will consider all protests or other comments filed, but only those who file a motion to intervene in accordance with the Commission's Rules may become a party to the proceeding. Any comments, protests, or motions to intervene must be received on or before the specified comment date for the particular application.

Filing and Service of Responsive Documents—Any filings must bear in all capital letters the title ''COMMENTS'', ''NOTICE OF INTENT

TO FILE COMPETING APPLICATION'', ''COMPETING APPLICATION'', ''PROTEST'', ''MOTION TO INTERVENE'', as applicable, and the Project Number of the particular application to which the filing refers. Any of the above-named documents must be filed by providing the original and the number of copies provided by the Commission's regulations to: The Secretary Federal Energy Regulatory Commission, 888 First Street, N.E., Washington, D.C. 20426. An additional copy must be sent to Director, Division of Project Review, Federal Energy Regulatory Commission, at the above-mentioned address. A copy of any notice of intent, competing application or motion to intervene must also be served upon each representative of the Applicant specified in the particular application.

Agency Comments—Federal, state, and local agencies are invited to file comments on the described application. A copy of the application may be obtained by agencies directly from the Applicant. If an agency does not file comments within the time specified for filing comments, it will be presumed to have no comments. One copy of an agency's comments must also be sent to the Applicant's representatives.

David P. Boergers,

Secretary.

[FR Doc. 00–11935 Filed 5–11–00; 8:45 am]

BILLING CODE 6717–01–M

ENVIRONMENTAL PROTECTION AGENCY

[FRL–6606–2]

Extension of Time to Comment on Agency Information Collection Activities: Proposed Collection; Comment Request; National Oil and Hazardous Substances Pollution Contingency Plan, Subpart J

AGENCY: Environmental Protection Agency (EPA).

ACTION: Notice of extension of time to comment on Agency Information Collection Activities: proposed collection; comment request.

SUMMARY: The Environmental Protection Agency (EPA) is announcing an extension of time to comment on the National Oil and Hazardous Substances Pollution Contingency Plan-Subpart J Information Collection Request renewal.

DATES: Comments are due by June 12, 2000.

ADDRESSES: Send comments to EPA, 5203G, 1200 Pennsylvania Avenue NW, Washington DC 20460. Materials relevant to this ICR may be inspected from 9 a.m. to 4 p.m., Monday through Friday, by visiting the Public Docket, located at 1235 Jefferson-Davis Highway (ground floor), Arlington, Virginia 22202. The docket number for this notice is SPSUBJ. The telephone number for the Public Docket is (703) 603–9232.

FOR FURTHER INFORMATION CONTACT: William ''Nick'' Nichols, (703) 603–9918, Facsimile Number (703) 603–9116, e-mail:nichols.nick@epa.gov.

SUPPLEMENTARY INFORMATION: The EPA announces an extension of time to submit comments on the National Oil and Hazardous Substances Pollution Contingency Plan-subpart J Information Collection Request renewal from May 17, 2000 to June 12, 2000. Subpart J of the NCP allows and regulates the use of chemical and biological oil spill cleanup and control agents. The information collected is supplied by the manufacturer of such products. This information and data are then analyzed by EPA to determine the appropriateness, and under which category, the product may be listed on the NCP Product Schedule. This product data are critical for EPA to assure effectiveness and toxicity data for these products are available to the oil spill community for their use. The original document for comment was published in the **Federal Register** at 65 FR 20451 (April 17, 2000).

Dated: May 3, 2000.

Stephen D. Luftig,

Director, Office of Emergency and Remedial Response.

[FR Doc. 00–12020 Filed 5–11–00; 8:45 am]

BILLING CODE 6560–50–P

ENVIRONMENTAL PROTECTION AGENCY

[OPP–0900657; FRL–6554–7]

EPA–USDA Committee to Advise on Reassessment and Transition; Request for Nominations for Appointment

AGENCY: Environmental Protection Agency (EPA).

ACTION: Notice.

SUMMARY: The EPA–USDA Committee to Advise on Reassessment and Transition (CARAT) is being established in accordance with the Federal Advisory Committee Act as a subcommittee under the auspices of the EPA National Advisory Council for Environmental Policy and Technology (NACEPT). The purpose of CARAT is to provide advice and counsel to the Administrator of EPA and the Secretary of Agriculture regarding strategic approaches for pest management planning and tolerance reassessment for pesticides as required by the Food Quality Protection Act of 1996 (FQPA). CARAT is preceded by the Tolerance Reassessment Advisory Committee and will be guided by the principles set forth by the Vice President for EPA and USDA to work together to ensure smooth implementation of FQPA through use of sound science, consultation with stakeholders, increased transparency and reasonable transition for agriculture. EPA and USDA are soliciting qualified candidates who want to be considered for appointment to CARAT.

DATES: Nominations will be accepted until 5:00 p.m. on May 26, 2000.

ADDRESSES: Nominations must be submitted in writing by mail, electronically or in person. Please follow the detailed instructions for each method as provided in Unit I. C. of the **SUPPLEMENTARY INFORMATION**. To ensure proper receipt by EPA, it is imperative that you identify docket control number OPP–00657 in the subject line on the first page of your response.

FOR FURTHER INFORMATION CONTACT: Margie Fehrenbach, Designated Federal Officer, CARAT, Office of Pesticide Programs (7501-C), Office of Prevention, Pesticides and Toxic Substances, Environmental Protection Agency, 1200 Pennsylvania Ave., NW, Washington, DC 20460; telephone number: (703) 305–7090; e-mail address: Fehrenbach.margie@epa.gov.

SUPPLEMENTARY INFORMATION:

I. General Information

A. Does this Action Apply to Me?

This action is directed to the public in general; however, it may be of interest to persons who are concerned about implementation of the FQPA (Public Law 104–170). Passed in 1996, this new law strengthens the nation's system for regulating pesticides on food. CARAT was preceded by the Tolerance Reassessment Advisory Committee which was established in 1998 in response to Vice President Gore's request for EPA and USDA to work together to ensure smooth implementation of FQPA.

B. How Can I Get Additional Information, Including Copies of this Document or Other Related Documents?

1. *Electronically*. You may obtain electronic copies of this document, and certain other related documents that

might be available electronically, from the EPA Internet Home Page at http://www.epa.gov/. To access this document, on the Home Page select ''Laws and Regulations'' and then look up the entry for this document under the ''**Federal Register**—Environmental Documents.'' You can also go directly to the **Federal Register** listings at http://www.epa.gov/fedrgstr/.

To access information about the Committee to Advise on Reassessment and Transition (CARAT), go directly to the Home Page for EPA's Office of Pesticide Programs at http://www.epa.gov/pesticides/carat/.

2. *In person*. The Agency has established an official record for this action under docket control number OPP–00657. The official record is available in the Docket for inspection from 8:30 a.m. to 4:00 p.m., Monday - Friday, excluding Federal holidays, in the Public Information and Records Integrity Branch (PIRIB), Office of Pesticide Programs, USEPA, Crystal Mall 2 (CM #2), 1921 Jefferson Davis Highway, Rm. 119, Arlington, VA 22202, telephone number (703) 305–5805.

C. How and to Whom do I Submit Nominations?

You may submit nominations through the mail, in person, or electronically. To ensure proper receipt by EPA, it is imperative that you identify docket control number OPP–00657 in the subject line on the first page of your response.

1. *By mail*. Submit your nominations to: Public Information and Records Integrity Branch, 7502-C, Office of Pesticide Programs, Office of Prevention, Pesticides and Toxic Substances (OPPTS), US Environmental Protection Agency, 1200 Pennsylvania Ave., NW, Washington, DC 20460.

2. *In person or by courier*. Deliver your nominations to: Public Information and Records Integrity Branch, Office of Pesticide Programs, OPPTS, Environmental Protection Agency, CM #2, 1921 Jefferson Davis Highway, Rm. 119, Arlington, VA 22202. The Docket is open from 8:30 a.m. to 4 p.m., Monday through Friday, excluding legal holidays. The telephone number for the Docket is (703) 305–5805.

3. *Electronically*. You may submit your nominations electronically by e-mail to: fehrenbach.margie@epa.gov, or you can submit a computer disk by mail as described in this unit. Do not submit any information electronically that you consider to be Confidential Business Information. Electronic nominations must be submitted as an ASCII file avoiding the use of special characters and any form of encryption. Nominations will also be accepted on standard disks in WordPerfect 6.1/8.0 or ASCII file format. All nominations in electronic form must be identified by docket control number OPP–00657.

II. Background

FQPA, Public Law 104–170 was passed in 1996 to strengthen the nation's system for regulating pesticides on food. CARAT is preceded by the Tolerance Reassessment Advisory Committee (TRAC), a previous joint advisory committee which existed from April 1998 through October 1999 in response to Vice President Gore's request for EPA and USDA to work together to ensure smooth implementation of the Food Quality Protection Act. Consistent with the important principles established by the Vice President in April 1998, EPA and USDA will work together and guide their implementation efforts by: applying sound science to all decisions; making our regulatory process transparent; providing appropriate reasonable transition mechanisms that will reduce risk but not jeopardize our nation's agriculture and its farm communities; and consulting with interested constituencies.

CARAT is co-chaired by EPA Acting Deputy Administrator Michael McCabe and USDA Deputy Secretary Richard Rominger. Among its objectives will be such issues as: Identifying opportunities for reasonable transition and strategic pest management planning for agriculture and public health uses of pesticides; providing advice to promote sound science and transparency in the scientific risk assessments necessary to implement the FQPA, including tolerance reassessment and pesticide reregistration; and assuring appropriate priority is given to risk management strategies for the pesticides that are most likely to lead to exposures to children.

List of Subjects

Environmental protection, Agriculture, Chemicals, Food, Pesticides, Tolerance Reassessment and Pests.

Dated: May 8, 2000.

Susan H. Wayland,

Acting Assistant Administrator for Prevention, Pesticides, and Toxic Substances.

[FR Doc. 00–12131 Filed 5–10–00; 12:07 pm]

BILLING CODE 6560–0950–F

ENVIRONMENTAL PROTECTION AGENCY

[FRL–6602–8]

Montrose Superfund Site and Palos Verde Site, Notice of Disclosure of Contractor Information That May Contain Confidential Business Information

AGENCY: Environmental Protection Agency (EPA).

ACTION: Notice of disclosure.

SUMMARY: Environmental Protection Agency (EPA) regulations provide that EPA may, in special circumstances, disclose business information, including confidential business information, ''to the extent ordered by a Federal Court.'' 40 CFR 2.209(d). EPA is currently engaged in litigation with the Potentially Responsible Parties (''PRPs'') in connection with the Montrose Superfund Site and the Palos Verdes Shelf Site in California. EPA intends to release to these parties documentation of EPA's past costs at the Montrose Superfund Site and the Palos Verdes Shelf Site. In accordance with EPA regulations, EPA has entered into a Stipulation and Protective Order with the PRPs in which the PRPs have stipulated that the documents released to them may contain CBI, and have agreed to specified procedures to maintain the confidentiality of such information. *See* 58 FR 460. EPA hereby gives notice to the following parties that EPA intends to disclose information in EPA's possession that may be confidential business information, under the protection of the above-mentioned Stipulation and Protective Order:

(1) Any subcontractor or temporary firm which has performed work for any the following contractors under the any of the following contracts or inter-agency agreements:

CH2M Hill (68–W9–0031); DynCorp/Viar & Company, Inc. (68–01–6702); ICF Technology, Inc. (68–D1–0135 & 68–01–7456); Lockheed Environmental Systems & Tech. (68–C0–0050); Ecology and Environment (68–W0–0037); Tech Law, Inc. (68–W0–001); Camp, Dresser & McKee (68–W9–6939); Roy F. Weston (68–01–6669); Alliance/GCA (68–01–6769); Jacobs Engineering (68–01–7351); Planning Research Corp./Tetra Tech EM Inc. (68–W9–0009); Armstrong Data Services, Inc.(68–W5–0024); Labat-Anderson Incorporated (68–W4–0028 & 68–W9–0052); Science Application International Corp. (68–W4–0021); U.S. Army Corps of Engineers (DW96955411, DW96955287 & DW96955258); U.S. Dept. of Commerce (NOAA); U.S. Dept.

of Agriculture (DW12955106); U.S. Coast Guard (DW69955202); and U.S. Dept. of Health and Human Services (ATSDR):

(2) Other business entities that have done business with the above-listed contractors and who may have been listed in conflict of interest disclosures:

(3) Unsuccessful offerors to any of the above-mentioned contracts, including, but not limited to: Tetra Tech, Inc.; ICF Kaiser Engineers, Inc.; Roy F. Weston, Inc.; Jaffe, Trutanich, Scatena & Blum; PRC-EMI (Planning Research Corporation—Environmental Management, Inc.); Dalston Consulting, Inc.; Resource Applications, Inc.; and URS Consultants; and Bechtel Environmental, Inc.

AVAILABILITY: A copy of the Stipulation and Protective Order will be provided to the public upon request.

FOR FURTHER INFORMATION CONTACT: Elizabeth A. La Blanc, Assistant Regional Counsel, U.S. EPA, Region IX, 75 Hawthorne St., ORC–3 San Francisco, CA 94105; lablanc.elizabeth@epamail.epa.gov; phone (415) 744–1364.

Dated: April 19, 2000.

Elizabeth La Blanc,

Assistant Regional Counsel, Region IX.

[FR Doc. 00–12018 Filed 5–11–00; 8:45 am]

BILLING CODE 6560–50–U

ENVIRONMENTAL PROTECTION AGENCY

[ER–FRL–6607–1]

Environmental Impact Statements; Notice of Availability

Responsible Agency: Office of Federal Activities, General Information, (202) 564–7167 or www.epa.gov/oeca/ofa.

Weekly receipt of Environmental Impact Statements

Filed May 1, 2000 through May 5, 2000 Pursuant to 40 CFR 1506.9.

EIS No. 000134, Draft EIS, NPS, NJ, Maurice National Scenic and Recreational River (NS&RR) Comprehensive Management Plan, Implementation, Atlantic and Cumberland Counties, NJ, Due: June 26, 2000, Contact: Mary Vaura (215) 597–9175.

EIS No. 000135, Draft Supplement, NPS, MS, Natchez Trace Parkway, Construction of Section 3X Southern Terminus, Adam Counties, MS, Due: July 12, 2000, Contact: Wendall Simpson (601) 680–4005.

EIS No. 000136, Final EIS, FHW, OH, Meigs–124–21.16 Transportation Corridor, Relocating existing OH–124 and US 33, Meigs County, OH, Due: June 12, 2000, Contact: Timothy M. Hill (614) 644–0377.

EIS No. 000137, Final Supplement, NOA, Fishery Management Plan (FMP), Regulatory Impact Review, Snapper-Grouper Complex, South Atlantic Region , Due: June 12, 2000, Contact: Dr. William Hogarth (727) 570–5305.

EIS No. 000138, Final EIS, AFS, CA, Pendola Fire Restoration Project, Implementation, Tahoe National Forest, Downieville Ranger District, Yuba County, CA, Due: June 12, 2000, Contact: Dennis Stevens (530) 478–6253.

Dated: May 9, 2000.

Joseph C. Montgomery,

Director, NEPA Compliance Division, Office of Federal Activities.

[FR Doc. 00–12015 Filed 5–11–00; 8:45 am]

BILLING CODE 6560–50–U

ENVIRONMENTAL PROTECTION AGENCY

[ER–FRL–6607–2]

Environmental Impact Statements and Regulations; Availability of EPA Comments

Availability of EPA comments prepared April 24, 2000 through April 28, 2000 pursuant to the Environmental Review Process (ERP), under section 309 of the Clean Air Act and section 102(2)(c) of the National Environmental Policy Act as amended. Requests for copies of EPA comments can be directed to the Office of Federal Activities at (202) 564–7167.

An explanation of the ratings assigned to draft environmental impact statements (EISs) was published in FR dated April 14, 2000 (65 FR 20157).

Draft EISs

ERP No. D–BOP–K80041–CA Rating EC2, Lassen County Federal Correctional Institution (FCI), Construction and Operation, To House Median-Security Inmates and Federal Prison Camp, Possible Site is Southwest Site, Lassen County, CA.

Summary: EPA expressed concern that potential air, water and waste impacts from prison industry were not fully disclosed. EPA requested that next document provide additional information on the above issues and building design.

Final EISs

ERP No. F–AFS–J65297–MT Bull Lake Estates Road Access Project, Implementation, Easement Grant Permit, Kootenai National Forest, Three Rivers Rangers District, Lincoln County, MT.

Summary: While EPA did not object to the statutorily mandated road access, it did express environmental concerns regarding potential secondary project impacts to water quality, fisheries, and wildlife.

ERP No. F–TPT–K61147–CA Presidio of San Francisco General Management Plan, Implementation, New Development and Uses within the Letterman Complex, Golden Gate National Recreation Area, City and County of San Francisco, CA.

Summary: No formal comment letter was sent to the preparing agency.

Dated: May 9, 2000.

Joseph C. Montgomery,

Director, NEPA Compliance Division, Office of Federal Activities.

[FR Doc. 00–12016 Filed 5–11–00; 8:45 am]

BILLING CODE 6560–50–U

ENVIRONMENTAL PROTECTION AGENCY

[FRL–6605–9]

Notice of Intent To Prepare a Draft Supplemental Environmental Impact Statement for the Meramec River Enhancement and Wetlands Protection Project

AGENCY: Environmental Protection Agency (EPA).

ACTION: Notice.

SUMMARY: This document advises the public that the U.S. Environmental Protection Agency intends to develop a Draft Supplemental Environmental Impact Statement (DSEIS). The DSEIS will update a 1979 FEIS in order to re-evaluate the Federal actions relating to a proposed regionalization of wastewater treatment services within the Meramec River Basin in Missouri. The DSEIS will assist EPA in identifying and documenting the existing baseline environmental conditions in the project area, forecasting reasonably expected development within the basin, and analyzing alternatives with which to fulfill the wastewater treatment needs of the Meramec Basin. This assessment will be subsequently used to determine the environmental consequences of the proposed project and the significance of those consequences. The associated actions are: (1) Provision of grant funding to MSD for the construction of a Regional Wastewater Treatment Plant; (2) Identifying all required Federal permits, licences and entitlements.

This document is being furnished pursuant to the Council on

Environmental Quality Regulations for Implementing the Procedural Provisions of the National Environmental Policy Act (NEPA) Regulations (40 CFR 1501.7 and 1508.22) to obtain suggestions and information from other agencies and the public on the scope of issues and alternatives to be considered in preparation of the DSEIS.

DATES: As an opportunity for interested persons to comment on the issues and alternatives of the DSEIS, a public scoping meeting is scheduled as follows: Wednesday, May 24, 2000, 5:30 to 8 P.M. at Rogers Elementary School, 7700 Fine Road, Mehlville, MO 63129.

ADDRESSES: Comments regarding the scope of the DSEIS should be addressed to Mr. Joseph E. Cothern, U.S. Environmental Protection Agency, 901 N. 5th Street, Kansas City, Kansas 66101. Comments should be received on or before June 15, 2000, at the above address. Written comments may also be sent by facsimile to 913/551–8752 or e-mail at *cothern.joe@epa.gov.* Comments received will be available for public inspection by appointment during normal business hours (7:30 a.m. to 4:30 p.m., Monday through Friday) at the above office; please call (913) 551–7148 for an appointment. All comments received will become part of the administrative record and may be released.

FOR FURTHER INFORMATION CONTACT: Contact Joseph E. Cothern at the above address and telephone number.

SUPPLEMENTARY INFORMATION: The Lower Meramec River Basin drainage area lies in the southern and southwestern portions of St. Louis County within the chartered jurisdiction of the Metropolitan St. Louis Sewer District (MSD). Areas in adjacent northern Jefferson County are also tributary. The MSD is empowered to enter into contractual agreements with other authorities, and has provided contract wastewater treatment for the City of Arnold (located in Jefferson County) since 1982 at the Lower Meramec Interim Treatment Lagoons at the site of the proposed regional plant, near (Meramec) river mile 1.5. This facility currently treats an average of 3.6 MGD.

Other MSD treatment facilities in the service area, (which are being considered for decommissioning in this regionalization project), include (proceeding upstream):

—Baumgartner Treatment Lagoons, near river mile 5.5, acquired in the purchase of a private sewer company in 1977, and upgraded by MSD, with average daily flows of 7.95 MGD.

—Fenton Wastewater Treatment Plant, near river mile 15.5, acquired from a private sewer company in 1979, and upgraded by MSD, presently providing secondary treatment for average daily flows of 4.0 MGD.

—Grand Glaize Wastewater Treatment Plant, near river mile 20, constructed by MSD in 1983 to provide secondary treatment for 20 MGD, and currently receiving average daily flows of 17.7 MGD.

Dated: May 2, 2000.

William Rice,

Acting Regional Administrator, Region 7.

[FR Doc. 00–12019 Filed 5–11–00; 8:45 am]

BILLING CODE 6560–50–P

ENVIRONMENTAL PROTECTION AGENCY

[FRL–6606–1]

Chesapeake Bay Program Activities Grants

AGENCY: Environmental Protection Agency (EPA).

ACTION: Notice.

SUMMARY: The U.S. Environmental Protection Agency is issuing a request for proposals that will assist the Chesapeake Bay Program in meeting its goals and commitments. Approximately $2 million is available through the RFP. Subjects addressed in the RFP include air quality, nutrients, sediments, best management practices, chemical contaminants, communication, exotic species, fish, habitat restoration, oysters, student engagement, submerged aquatic vegetation, water quality, local government and community engagement, and sound land use. Functional categories that proposals should fall under include implementation and technical assistance; workshops, seminars, and training; monitoring and assessment; research and analysis; and education and outreach. Applicants must be a non-profit organization, local government, state agency, interstate agency, college, or university institution. Funding will be provided to an organization under the authority of the Clean Water Act, section 117.

The RFP is available starting May 5, 2000 at the following web-site: *http://www.epa.edu/r3chespk/* You may request a paper copy by calling Carol Cochran at 215–815–2986 or by e-mail *cochran.carol@epa.gov* or by calling Lori Mackey at 410–267–5715 or e-mail at *mackey.lori@epa.gov.* All proposals must be received by the Chesapeake Bay Program Office by close of business June 9, 2000. Any late, incomplete, or faxed proposals will not be considered.

Peter J. Marx,

Acting Director, Chesapeake Bay Program.

[FR Doc. 00–12000 Filed 5–11–00; 8:45 am]

BILLING CODE 6560–50–M

ENVIRONMENTAL PROTECTION AGENCY

[WH–FRL–6605–4]

Public Stakeholder Meeting on the National Strategy To Develop Regional Nutrient Criteria

AGENCY: Environmental Protection Agency (EPA).

ACTION: Notice of public stakeholder meeting on the National Strategy to Develop Regional Nutrient Criteria.

SUMMARY: The Environmental Protection Agency (EPA) is holding a stakeholder meeting on May 25, 2000, to stimulate an information exchange with stakeholders on issues related to the National Strategy to Develop Regional Nutrient Criteria.

DATES: The public stakeholder meeting will start at 9 a.m. and adjourn at 5:30 p.m. on May 25, 2000.

FOR FURTHER INFORMATION CONTACT: Robert Cantilli (4304), U.S. EPA Headquarters, Ariel Rios Building, 1200 Pennsylvania Ave., NW (MC 4304), Washington, DC 20460 (Telephone: (202) 260–5546).

SUPPLEMENTARY INFORMATION: The public stakeholder meeting will be held at the Hilton—Crystal City, 2399 Jefferson Davis Highway, Arlington, VA for the purpose of conducting an information exchange with stakeholders on issues related to the National Strategy to Develop Regional Nutrient Criteria. The public stakeholder meeting will provide an opportunity for interested persons to discuss the issues and process for developing and implementing regional nutrient criteria. Specifically, EPA will discuss progress it has made in developing draft ecoregional nutrient criteria as well as recommended procedures for implementing these criteria. The stakeholder meeting will also be an opportunity for substantive input and dialogue with the primary authors of the Nutrient Waterbody Type Guidance Documents as well as EPA Regional Nutrient Coordinators who are supporting the development and adoption of regional nutrient criteria at the State and ecoregional level. Participants for the stakeholders meeting who wish to make comments or ask questions are strongly encouraged to

provide an advance written request due to potential time limitations. Requests to speak at the stakeholder meeting should be made to John Bachman, Great Lakes Environmental Center, Inc. at (231) 941–2230 or by e-mail at: jbachman@glec-tc.com.

EPA is inviting all interested members of the public to participate in the stakeholder meeting. Approximately 150 seats will be available for the public. Seats will be available on a first-come, first served basis. On-site registration for the meeting will begin at 8 a.m.

For additional information about the meeting, please contact Robert Cantilli of EPA's Office of Science and Technology at (202) 260–5546 or by e-mail at cantilli.robert@epa.gov.

James Hanlon,

Acting Director, Office of Science and Technology.

[FR Doc. 00–12001 Filed 5–11–00; 8:45 am]

BILLING CODE 6560–50–P

ENVIRONMENTAL PROTECTION AGENCY

[FRL–6700–1]

Science Advisory Board Notification of Public Advisory Committee Meetings

Pursuant to the Federal Advisory Committee Act, Public Law 92–463, notice is hereby given of three meetings of Committees of the US EPA Science Advisory Board on the dates and times noted below. All times noted are Eastern Daylight Time. All meetings are open to the public; however, seating is limited and available on a first come basis. *Important Notice:* Documents that are the subject of SAB reviews are normally available from the originating EPA office and are not available from the SAB Office—information concerning availability of documents from the relevant Program Office is included below.

1. SAB Executive Committee (EC) Teleconference—May 30, 2000

The Executive Committee (EC) of US EPA's Science Advisory Board will conduct a public teleconference meeting on Tuesday, May 30, 2000, between the hours of 1 and 3 pm Eastern Daylight Time. The meeting will be coordinated through a conference call connection in Room 6013 in the USEPA, Ariel Rios Building North, 1200 Pennsylvania Avenue, NW, Washington, DC. The public is encouraged to attend the meeting in the conference room noted above. However, the public may also attend through a telephonic link, to the extent that lines are available. Additional instructions about how to participate in the conference call can be obtained by calling Ms. Priscilla Tillery-Gadsen no earlier than one week prior to the meeting (beginning on May 23) at (202) 564–4533, or via e-mail at tillery.priscilla@epa.gov.

Purpose of the Meeting—In this meeting, the Executive Committee plans to review reports from some of its Committees/Subcommittee, most likely including the following:

(a) Drinking Water Committee (DWC): ''Science Advisory Board Report on EPA's Draft Proposal on a Groundwater Rule''

(b) Environmental Economics Advisory Committee (EEAC): ''Benefits Adjustments for Long-Term Effects''

(c) Environmental Engineering Committee (EEC): ''Review of the Agency's Environmental Technology Verification (ETV) Program''

Availability of Review Materials: Drafts of the reports that will be reviewed at the meeting should be available to the public at the SAB website (http://www.epa.gov/sab) by close-of-business on May 19, 2000.

FOR FURTHER INFORMATION CONTACT: Any member of the public wishing further information concerning this meeting or wishing to submit brief oral comments must contact Dr. Donald Barnes, Designated Federal Officer, Science Advisory Board (1400A), U.S. Environmental Protection Agency, 1200 Pennsylvania Avenue, NW, Washington, DC 20460; telephone (202) 564–4533; FAX (202) 501–0323; or via e-mail at *barnes.don@epa.gov.* Requests for oral comments must be in writing (e-mail preferred) and received by Dr. Barnes no later than noon Eastern Time on May 26, 2000.

2. Drinking Water Committee (DWC) Meeting—June 5–7, 2000

The Drinking Water Committee of the US EPA Science Advisory Board (SAB), will meet from June 5 through 7, 2000. Days one and two of the meeting, June 5 and 6, 2000, will be held at the Holiday Inn Georgetown, 2101 Wisconsin Avenue, NW, Washington, DC 20007, phone: (202) 338–4600 . On day three, June 7, 2000, the Committee will meet in conference room 6013, USEPA, Ariel Rios Building North, 1200 Pennsylvania Avenue, NW, Washington, DC 20004; phone: (202) 564–4533. The meeting will begin by 9 a.m. on June 5 and adjourn no later than 3 p.m. on June 7, 2000.

Purpose of the Meeting—The Drinking Water Committee will conduct a review of EPA's proposed drinking water regulation for arsenic. The Committee will conduct this review in fulfillment of its responsibilities under Section 1412(e) of the Safe Drinking Water Act (SDWA as amended in August 1996) which states that:

The Administrator shall request comments from the Science Advisory Board (established under the Environmental Research, Development, and Demonstration Act of 1978) prior to proposal of a maximum contaminant level goal and national primary drinking water regulation. The Board shall respond, as it deems appropriate, within the time period applicable for promulgation of the national primary drinking water standard concerned. This subsection shall, under no circumstances, be used to delay final promulgation of any national primary drinking water standard.

Background—The current National Primary Drinking Water Regulation for arsenic is 50 μg/Liter (0.05 milligrams per liter—mg/L). This regulatory level has been in effect since 1976 and is based on a U.S. Public Health Service standard whose origins date back to 1942. The 1996 Amendments to the Safe Drinking Water Act required the Agency to proceed on two tracks to update the standard: on the one hand, the Agency was directed to develop an arsenic research strategy by February 1997 designed to serve as roadmap for filling gaps in our understanding of the scientific issues surrounding arsenic and, at the same time, to work toward proposing a new primary drinking water regulation by January 1, 2000 and to promulgate a final rule by January 1, 2001.

In response, the Agency met its deadline for developing the research plan and is currently implementing the plan, together with external partners. EPA has also been updating and assembling the various risk management components that will be needed to propose a revised regulation: risk characterization, analytical methods, occurrence, treatment technologies, costs, and benefits. The most challenging of these has been the risk characterization and the underlying risk assessment of the health effects of arsenic. To assist the Agency in its efforts, EPA asked the National Academy of Sciences' National Research Council (NRC) to evaluate all relevant national and international literature concerning the health effects of arsenic and to provide the Agency with its assessment of these data and information. The NRC published its report, Arsenic in Drinking Water in March, 1999. That report concluded that studies in Taiwan, Chile, and Argentina link arsenic to skin, bladder and lung

cancer and to noncancer effects. The NRC report recommended that EPA lower its MCL.

Charge to the Committee—A. Arsenic Health Effects

Charge Question 1: Concentration of inorganic arsenic as principal form causing health effects—Does the SAB have perspectives on this issue that it believes EPA should consider in developing its risk assessment?

EPA has identified inorganic arsenic as the principal form causing health effects, and the literature indicates that most arsenic in drinking water is inorganic. EPA's MCLG and MCL do not distinguish between arsenate and arsenite.

Charge Question 2: Implications of natural arsenic exposure through food—Does SAB agree with the implied NRC perspective that relative source contribution of food should be taken into consideration in the setting of the drinking water standard and how might we consider this and communicate it to the public?

The 1999 NRC report estimated the daily inorganic food intake by assuming that 10% of the arsenic in seafood is inorganic, and all other foods are 100% inorganic arsenic. NRC noted that these assumptions set an upper bound on the contribution from food, which is about 10 μg a day for adults. The NRC report stated that ''The significance of the intake of inorganic arsenic from food increases as the concentration of arsenic in water decreases. If [drinking] water contains 50 μg/L of inorganic arsenic, arsenic in food might not be significant. However, if [drinking] water contains 5 μg/L of arsenic and 2 L per day is consumed, the contribution of inorganic arsenic from diet and water are comparable (NRC report).'' Further, ''The public health significance of daily ingestion of a given amount of arsenic in drinking water will be influenced by the background levels of arsenic consumed in food (NRC report).'' ''Consideration of arsenic in food might affect both the dose-response relationship for arsenic in drinking water in the study population and the implications for risk from arsenic in drinking water in the United States where dietary arsenic might differ from that in the study population in Taiwan (NRC report)''.

Charge Question 3: Accounting for Cardiovascular Health End Point—Is precautionary advice on use of low-arsenic water in preparation of infant formula appropriate given the available information?

The NRC report was inconclusive about the health risks to the pregnant woman, developing fetus, infants, lactating women, and children. Given the potential for cardiovascular disease (as evidenced by EPA's Utah studies and extensive other data) and uncertainty about risks to infants, EPA plans to issue a health advisory to recommend use of low-arsenic water in preparation of infant formula.

B. Arsenic Treatment Charge for the SAB

Charge Question 4: Decision tree for waste disposal options for arsenic treatment brines and spent media—Based upon a review of the submitted materials, does the SAB believe that the EPA produced an accurate projection of the likely disposal options for arsenic residuals and the distribution of these options by treatment type? What are the SAB's views on the advantages and the limitations of the various waste disposal options? What effect, if any, would the SAB's analysis of these advantages and limitations have on the probabilities assigned? What are the SAB's views on which options will be more likely used by small systems (less than 10,000 people), and which will be more likely used by larger ones?

EPA identified waste disposal options that will likely be used for arsenic treatment residuals. EPA considered three types or residuals: brines or liquid wastes, sludges, and solid wastes. Ultimately, liquid wastes would be disposed at sanitary sewers, evaporation ponds, or be directly discharged. Chemical precipitation is assumed to be an intermediate step for the disposal of some brines. Sludges would be either mechanically, or non-mechanically dewatered prior to ultimate disposal at a landfill. Solid wastes would typically be disposed at non-hazardous landfills. EPA assigned national selection probabilities to each of these options in a decision tree. These probabilities are an estimation of the likelihood of a treatment plant opting for a particular disposal option given the size of the system, whether it is surface water or groundwater, and the type of arsenic removal treatment technology used.

The Toxicity Characteristic (TC) that identifies wastes as hazardous waste used 100 times the interim primary drinking water standards for eight metals. Although six of the drinking water standards have changed, the TC values have not. However, some people are concerned that after the drinking water MCL is lowered, the TC for arsenic will be lowered to 100 times the new MCL, and that many drinking water treatment residuals will be subject to costly hazardous waste management regulations even though the Office of Solid Waste has stated that the simple 100 times criterion will not be used when the TC regulatory levels are revised, but rather, more sophisticated modeling tools would be used. Consequently, the important questions relating to waste disposal do not relate to hazardous waste disposal. Rather, for brines, they relate to questions such as TDS (total dissolved solids) restrictions in waters receiving brine, and restrictions on sanitary sewer discharge due to TBLLs (technically based local limits). For sludge disposal, they relate to restrictions that may be placed on land application, which may result in more systems using landfills.

Charge Question 5: Decision tree for ground water treatment technologies—Does the SAB agree with the principal ''branches'' of EPA's decision tree described in the submitted documents and the likelihood that these options will be used for systems of various sizes with various source water characteristics? What views does the SAB have on EPA's description of the advantages and limitations of these treatment technologies? Would the SAB's views on the these advantages and limitations affect the probabilities assigned?

EPA has identified treatment technologies that will likely be used to treat arsenic in groundwater systems. These include ion exchange, activated alumina, reverse osmosis, coagulation-assisted microfiltration, greensand filtration, and point-of-use and point-of-entry devices. The EPA has also identified non-treatment options such as regionalization and alternate source. EPA consulted with small utilities and AWWA in order to identify issues which would affect selection of treatment technologies for small systems, which included cost, complexity of operation, chemical handling issues, and frequency of maintenance on point-of-use devices. EPA has assigned selection probabilities to each of these options in a decision tree that form the basis for the Agency's overall cost projections.

Availability of Review Materials—Additional information on the materials provided to the Committee for this review can be obtained by contacting Ms. Irene Dooley, US EPA Office of Water by telephone at (202) 260–9531 or by e-mail at *dooley.irene@epa.gov.*

FOR FURTHER INFORMATION CONTACT: Any member of the public wishing further information concerning this meeting or wishing to submit brief oral comments (10 minutes or less) must contact Thomas O. Miller, Designated Federal Officer, Science Advisory Board

(1400A), U.S. Environmental Protection Agency, 1200 Pennsylvania Avenue, NW, Washington, DC 20460; telephone (202) 564–4558; FAX (202) 501–0582; or via e-mail at *miller.tom@epa.gov.* Requests for oral comments must be in *writing* (e-mail, fax or mail) and received by Mr. Miller no later than noon Eastern Time on May 30, 2000.

3. SAB Executive Committee (EC) Teleconference—June 12, 2000

The Executive Committee (EC) of US EPA's Science Advisory Board will conduct a public teleconference meeting on Monday, June 12, 2000 between the hours of 1 and 3 pm Eastern Daylight Time. The meeting will be coordinated through a conference call connection in Room 6013 in the USEPA, Ariel Rios Building North, 1200 Pennsylvania Avenue, NW, Washington, DC. The public is encouraged to attend the meeting in the conference room noted above. However, the public may also attend through a telephonic link, to the extent that lines are available. Additional instructions about how to participate in the conference call can be obtained by calling Ms. Priscilla Tillery-Gadsen no earlier than one week prior to the meeting (beginning on May 29) at (202) 564–4533, or via e-mail at tillery.priscilla@epa.gov.

Purpose of the Meeting—In this meeting, the Executive Committee plans to review reports from some of its Committees/Subcommittee, most likely including the following:

(a) EC Subcommittee on Data from the Testing of Human Subjects: *''Report on Data from the Testing of Human Subjects''*

(b) EC Subcommittee on Review of Cancer Guidelines: *''Applicability of the Agency's Cancer Risk assessment Guidelines to Children''*

(c) Environmental Engineering Committee (EEC): *''Commentary on Measures of Environmental Technology Performance.''*

Availability of Review Materials—Drafts of the reports that will be reviewed at the meeting should be available to the public at the SAB website (http://www.epa.gov/sab) by close-of-business on May 25, 2000.

FOR FURTHER INFORMATION CONTACT: Any member of the public wishing further information concerning this meeting or wishing to submit brief oral comments must contact Dr. Donald Barnes, Designated Federal Officer, Science Advisory Board (1400A), U.S. Environmental Protection Agency, 1200 Pennsylvania Avenue, NW, Washington, DC 20460; telephone (202) 564–4533; FAX (202) 501–0323; or via e-mail at *barnes.don@epa.gov.* Requests for oral comments must be in writing (e-mail preferred) and received by Dr. Barnes no later than noon Eastern Time on June 5, 2000.

Providing Oral or Written Comments at SAB Meetings

It is the policy of the Science Advisory Board to accept written public comments of any length, and to accommodate oral public comments whenever possible. The Science Advisory Board expects that public statements presented at its meetings will not be repetitive of previously submitted oral or written statements. *Oral Comments:* In general, each individual or group requesting an oral presentation at a face-to-face meeting will be limited to a total time of ten minutes. For teleconference meetings, opportunities for oral comment will usually be limited to no more than three minutes per speaker and no more than fifteen minutes total. Deadlines for getting on the public speaker list for a meeting are given above. Speakers should bring at least 35 copies of their comments and presentation slides for distribution to the reviewers and public at the meeting. *Written Comments:* Although the SAB accepts written comments until the date of the meeting (unless otherwise stated), written comments should be received in the SAB Staff Office at least one week prior to the meeting date so that the comments may be made available to the committee for their consideration. Comments should be supplied to the appropriate DFO at the address/contact information noted above in the following formats: One hard copy with original signature, and one electronic copy via e-mail (acceptable file format: WordPerfect, Word, or Rich Text files (in IBM-PC/Windows 95/98 format). Those providing written comments and who attend the meeting are also asked to bring 25 copies of their comments for public distribution.

General Information—Additional information concerning the Science Advisory Board, its structure, function, and composition, may be found on the SAB Website (*http://www.epa.gov/sab*) and in The FY1999 Annual Report of the Staff Director which is available from the SAB Publications Staff at (202) 564–4533 or via fax at (202) 501–0256. Committee rosters, draft Agendas and meeting calendars are also located on our website.

Meeting Access—Individuals requiring special accommodation at this meeting, including wheelchair access to the conference room, should contact the DFO at least five business days prior to the meeting so that appropriate arrangements can be made.

Dated: May 5, 2000.

Donald G. Barnes,

Staff Director, Science Advisory Board.

[FR Doc. 00–12021 Filed 5–11–00; 8:45 am]

BILLING CODE 6560–50–P

ENVIRONMENTAL PROTECTION AGENCY

[PF–926; FRL–6497–1]

Notice of Filing Pesticide Petitions to Establish a Tolerance for Certain Pesticide Chemicals in or on Food

AGENCY: Environmental Protection Agency (EPA).

ACTION: Notice.

SUMMARY: This notice announces the initial filing of a pesticide petition proposing the establishment of regulations for residues of certain pesticide chemicals in or on various food commodities.

DATES: Comments, identified by docket control number PF–914, must be received on or before June 12, 2000.

ADDRESSES: Comments may be submitted by mail, electronically, or in person. Please follow the detailed instructions for each method as provided in Unit I.C. of the **SUPPLEMENTARY INFORMATION.** To ensure proper receipt by EPA, it is imperative that you identify docket control number PF–926 in the subject line on the first page of your response.

FOR FURTHER INFORMATION CONTACT: By mail: Tracy Keigwin, Registration Division (7505C), Office of Pesticide Programs, Environmental Protection Agency, Ariel Rios Bldg., 1200 Pennsylvania Ave., NW., Washington, DC 20460; telephone number: (703) 305–6605; e-mail address: keigwin.tracy@epa.gov.

SUPPLEMENTARY INFORMATION:

I. General Information

A. Does this Action Apply to Me?

You may be affected by this action if you are an agricultural producer, food manufacturer or pesticide manufacturer. Potentially affected categories and entities may include, but are not limited to:

Categories	NAICS codes	Examples of potentially affected entities
Industry	111 112	Crop production Animal production

Categories	NAICS codes	Examples of potentially affected entities
	311 32532	Food manufacturing Pesticide manufacturing

This listing is not intended to be exhaustive, but rather provides a guide for readers regarding entities likely to be affected by this action. Other types of entities not listed in the table could also be affected. The North American Industrial Classification System (NAICS) codes have been provided to assist you and others in determining whether or not this action might apply to certain entities. If you have questions regarding the applicability of this action to a particular entity, consult the person listed under **FOR FURTHER INFORMATION CONTACT.**

B. How Can I Get Additional Information, Including Copies of this Document and Other Related Documents?

1. *Electronically.* You may obtain electronic copies of this document, and certain other related documents that might be available electronically, from the EPA Internet Home Page at http://www.epa.gov/. To access this document, on the Home Page select ''Laws and Regulations'' and then look up the entry for this document under the ''**Federal Register**—Environmental Documents.'' You can also go directly to the **Federal Register** listings at http://www.epa.gov/fedrgstr/.

2. *In person.* The Agency has established an official record for this action under docket control number PF–926. The official record consists of the documents specifically referenced in this action, any public comments received during an applicable comment period, and other information related to this action, including any information claimed as confidential business information (CBI). This official record includes the documents that are physically located in the docket, as well as the documents that are referenced in those documents. The public version of the official record does not include any information claimed as CBI. The public version of the official record, which includes printed, paper versions of any electronic comments submitted during an applicable comment period, is available for inspection in the Public Information and Records Integrity Branch (PIRIB), Rm. 119, Crystal Mall #2 (CM #2), 1921 Jefferson Davis Highway, Arlington, VA, from 8:30 a.m. to 4 p.m., Monday through Friday, excluding legal holidays. The PIRIB telephone number is (703) 305–5805.

C. How and to Whom Do I Submit Comments?

You may submit comments through the mail, in person, or electronically. To ensure proper receipt by EPA, it is imperative that you identify docket control number PF–926 in the subject line on the first page of your response.

1. *By mail.* Submit your comments to: Public Information and Records Integrity Branch (PIRIB), Information Resources and Services Division (7502C), Office of Pesticide Programs (OPP), Environmental Protection Agency, Ariel Rios Bldg., 1200 Pennsylvania Ave., NW., Washington, DC 20460.

2. *In person or by courier.* Deliver your comments to: Public Information and Records Integrity Branch (PIRIB), Information Resources and Services Division (7502C), Office of Pesticide Programs (OPP), Environmental Protection Agency, Rm. 119, CM #2, 1921 Jefferson Davis Highway, Arlington, VA. The PIRIB is open from 8:30 a.m. to 4 p.m., Monday through Friday, excluding legal holidays. The PIRIB telephone number is (703) 305–5805.

3. *Electronically.* You may submit your comments electronically by e-mail to: ''*opp-docket@epa.gov* ,'' or you can submit a computer disk as described above. Do not submit any information electronically that you consider to be CBI. Avoid the use of special characters and any form of encryption. Electronic submissions will be accepted in Wordperfect 6.1/8.0 or ASCII file format. All comments in electronic form must be identified by docket control number PF–926. Electronic comments may also be filed online at many Federal Depository Libraries.

D. How Should I Handle CBI That I Want to Submit to the Agency?

Do not submit any information electronically that you consider to be CBI. You may claim information that you submit to EPA in response to this document as CBI by marking any part or all of that information as CBI. Information so marked will not be disclosed except in accordance with procedures set forth in 40 CFR part 2. In addition to one complete version of the comment that includes any information claimed as CBI, a copy of the comment that does not contain the information claimed as CBI must be submitted for inclusion in the public version of the official record. Information not marked confidential will be included in the public version of the official record without prior notice. If you have any questions about CBI or the procedures for claiming CBI, please consult the person identified under **FOR FURTHER INFORMATION CONTACT.**

E. What Should I Consider as I Prepare My Comments for EPA?

You may find the following suggestions helpful for preparing your comments:

1. Explain your views as clearly as possible.
2. Describe any assumptions that you used.
3. Provide copies of any technical information and/or data you used that support your views.
4. If you estimate potential burden or costs, explain how you arrived at the estimate that you provide.
5. Provide specific examples to illustrate your concerns.
6. Make sure to submit your comments by the deadline in this notice.
7. To ensure proper receipt by EPA, be sure to identify the docket control number assigned to this action in the subject line on the first page of your response. You may also provide the name, date, and **Federal Register** citation.

II. What Action is the Agency Taking?

EPA has received a pesticide petition as follows proposing the establishment and/or amendment of regulations for residues of a certain pesticide chemical in or on various food commodities under section 408 of the Federal Food, Drug, and Comestic Act (FFDCA), 21 U.S.C. 346a. EPA has determined that this petition contains data or information regarding the elements set forth in section 408(d)(2); however, EPA has not fully evaluated the sufficiency of the submitted data at this time or whether the data supports granting of the petition. Additional data may be needed before EPA rules on the petition.

List of Subjects

Environmental protection, Agricultural commodities, Feed additives, Food additives, Pesticides and pests, Reporting and recordkeeping requirements.

Dated: May 2, 2000.

James Jones,

Director, Registration Division, Office of Pesticide Programs.

Summary of Petition

The petitioner summary of the pesticide petition is printed below as required by section 408(d)(3) of the FFDCA. The summary of the petition

was prepared by the petitioner and represents the view of the petitioners. EPA is publishing the petition summary verbatim without editing it in any way. The petition summary announces the availability of a description of the analytical methods available to EPA for the detection and measurement of the pesticide chemical residues or an explanation of why no such method is needed.

Zeneca Ag Products

0F6092

EPA has received a pesticide petition (0F6092) from Zeneca Ag Products, 1800 Concord Pike, P.O. Box 15458, Wilmington, DE, 19850–5458 proposing, pursuant to section 408(d) of FFDCA, 21 U.S.C. 346a(d), to amend 40 CFR part 180.438, by establishing a tolerance for residues of lambda-cyhalothrin, (*S*)-alpha-cyano-3-phenoxybenzyl- (*Z*)-(1*R*,3*R*)-3-(2-chloro-3,3,3-trifluoroprop-1-enyl)-2, 2-dimethylcyclopropanecarboxylate and (*R*)-alpha-cyano-3-phenoxybenzyl- (*Z*)-(1*S*,3*S*)-3-(2-chloro-3,3,3-trifluoroprop-1-enyl)-2, 2-dimethylcyclopropanecarboxylate and the epimer of lambda-cyhalothrin, (*S*)-alpha-cyano-3-phenoxybenzyl- (*Z*)-(1*S*,3*S*)-3-(2-chloro-3,3,3-trifluoroprop-1-enyl)-2, 2-dimethylcyclopropanecarboxylate and (*R*)-alpha-cyano-3-phenoxybenzyl- (*Z*)-(1*R*,3*R*)-3-(2-chloro-3,3,3-trifluoroprop-1-enyl)-2, 2-dimethylcyclopropanecarboxylate in or on the raw agricultural commodities (RAC) canola seed, almond hulls, and the crop groupings pome fruit, stone fruit and tree nuts at 0.15, 1.5, 0.3, 0.5, 0.05 parts per million (ppm), respectively, and on the processed commodity apple pomace, wet at 2.5 ppm. EPA has determined that the petition contains data or information regarding the elements set forth in section 408(d)(2) of the FFDCA; however, EPA has not fully evaluated the sufficiency of the submitted data at this time or whether the data supports granting of the petition. Additional data may be needed before EPA rules on the petition.

A. Residue Chemistry

1. *Plant metabolism*. The metabolism of lambda-cyhalothrin has been studied in cotton, soybean, cabbage and wheat plants. The studies show that the metabolism generally follows that of other pyrethroid insecticides. The ester linkage is cleaved to form cyclopropanecarboxylic acids and the corresponding phenoxybenzyl alcohol. Overall the studies show that unchanged lambda-cyhalothrin is the principal constituent of the residue on edible portions of these crops.

2. *Analytical method*. An adequate analytical method (gas liquid chromatography with an electron capture detector) is available for enforcement purposes.

3. *Magnitude of residues*. Crop field trial residue data from canola, pome fruit, stone fruit and tree nuts studies show that the proposed tolerances on these commodities will not be exceeded when lambda-cyhalothrin is used as directed. A market basket survey of residues of lambda-cyhalothrin in samples of whole milk collected across the contiguous United States over a period of 1 year was conducted during 1998–99. Nearly 80% of the 360 samples collected had non-detectable (<0.0003 µg/L) levels of lambda-cyhalothrin with the remaining 20% having trace levels (<0.001 µg/L). These levels are substantially less than the established tolerance for whole milk of 0.2 milligrams/kilograms (mg/kg).

No increase in the dietary burden of poultry and ruminants is expected from use on canola, pome fruit, stone fruit, or tree nuts. Therefore, any secondary residues that might result in milk, meat, poultry, and eggs would be covered by the existing tolerances on these commodities.

B. Toxicological Profile

1. *Acute toxicity*. Acute toxicity studies with the technical grade of the active ingredient lambda-cyahothrin: oral lethel dose $(LD)_{50}$ in the rat of 79 mg/kg (males) and 56 mg/kg (females), dermal LD_{50} in the rat of 632 mg/kg (males) and 696 mg/kg females, primary eye irritation study showed mild irritation and primary dermal irritation study showed no irritation.

2. *Genotoxicty*. The following genotoxicity tests were all negative: a gene mutation assay (Ames), a mouse micronucleus assay, an *in vitro* cytogenetics assay, and a gene mutation study in mouse lymphoma cells.

3. *Reproductive and developmental toxicity*. A 3-generation reproduction study in rats fed diets containing 0, 10, 30, and 100 ppm with no developmental toxicity observed at 100 ppm, the highest dose tested. The maternal NOAEL (no observed adverse effect level) and LOAEL (lowest observed adverse effect level) for the study are established at 30 (1.5 mg/kg/day) and 100 ppm (5 mg/kg/day), respectively, based upon decreased parental body weight gain. The reproductive NOAEL and LOAEL are established at 30 (1.5 mg/kg/day) and 100 ppm (5 mg/kg/day), respectively, based on decreased pup weight gain during weaning.

A developmental toxicity study in rats given gavage doses of 0, 5, 10, and 15 mg/kg/day with no developmental toxicity observed under the conditions of the study. The developmental NOAEL is greater than 15 mg/kg/day, the highest dose tested. The maternal NOAEL and LOAEL are established at 10 and 15 mg/kg/day, respectively, based on reduced body weight gain.

A developmental toxicity study in rabbits given gavage doses of 0, 3, 10, and 30 mg/kg/day with no developmental toxicity observed under the conditions of the study. The maternal NOAEL and LOAEL are established at 10 and 30 mg/kg/day, respectively based on decreased body weight gain. The developmental NOAEL is greater than 30 mg/kg/day, the highest dose tested.

4. *Subchronic toxicity*. A 90-day feeding study in rats fed doses of 0, 10, 50 and 250 ppm with a NOAEL of 50 ppm and a LOAEL of 250 ppm based on body weight gain reduction.

A study where lambda-cyhalothrin in olive oil was applied to the skin of rats for 21 successive days at dose rates of 1, 10, or 100 (reduced to 50 after 2–3 applications) mg/kg/day. A NOAEL of 10 mg/kg/day is based on clinical signs of slight general toxicity at 50 mg/kg/day.

5. *Chronic toxicity*. A 12-month feeding study in dogs fed dose (by capsule) levels of 0, 0.1, 0.5, 3.5 mg/kg/day with a NOAEL of 0.1 mg/kg/day. The LOAEL for this study is established at 0.5 mg/kg/day based upon clinical signs of neurotoxicity.

A 24-month chronic feeding/carcinogenicity study with rats fed diets containing 0, 10, 50, and 250 ppm. The NOAEL was established at 50 ppm and LOAEL at 250 ppm based on reduced body weight gain. There were no carcinogenic effects observed under the conditions of the study.

A carcinogenicity study in mice fed dose levels of 0, 20, 100, or 500 ppm (0, 3, 15, or 75 mg/kg/day) in the diet for 2 years. A systemic NOAEL was established at 100 ppm and systemic LOAEL at 500 ppm based on decreased body weight gain in males throughout the study at 500 ppm. The Agency has classified lambda-cyhalothrin as a Group D carcinogen (not classifiable due to an equivocal finding in this study). It is Zeneca's position that no treatment-related carcinogenic effects were observed under the conditions of the study.

6. *Animal metabolism*. Metabolism studies in rats demonstrated that distribution patterns and excretion rates

in multiple oral dose studies are similar to single-dose studies. Accumulation of unchanged compound in fat upon chronic administration with slow elimination was observed. Otherwise, lambda-cyhalothrin was rapidly metabolized and excreted. The metabolism of lambda-cyhalothrin in livestock has been studied in the goat, chicken, and cow. Unchanged lambda-cyhalothrin is the major residue component of toxicological concern in meat and milk.

Human metabolism of lambda-cyhalothrin was assessed by administering 5 mg lambda-cyhalothrin orally to six male volunteers (average dose was 0.06 mg/kg) and dermally at 20 mg/800 centimeters^2 to five volunteers. No adverse effects were noted in the individuals given an oral dose, and only mild signs of parasthesia were noted in individuals receiving a dermal dose. Absorption by these two routes of exposure were determined by analysis of urinary metabolites. An average amount of 59% of the oral dose was absorbed. Dermal absorption was extremely low, and estimated to be 0.12% (range 0.04–0.19%).

7. *Metabolite toxicology*. The Agency has previously determined that the metabolites of lambda-cyhalothrin are not of toxicological concern and need not be included in the tolerance expression. Given this determination, it is concluded that there is no need to discuss metabolite toxicity.

8. *Endocrine disruption*. EPA is required to develop a screening program to determine whether certain substances (including all pesticides and inerts) ''may have an effect in humans that is similar to an effect produced by a naturally occurring estrogen, or such other endocrine effect * * *'' The Agency is currently working with interested stakeholders, including other government agencies, public interest groups, industry and research scientists in developing a screening and testing program and a priority setting scheme to implement this program. Congress has allowed 3 years from the passage of FQPA (August 3, 1999) to implement this program. At that time, EPA may require further testing of this active ingredient and end use products for endocrine disrupter effects.

C. Aggregate Exposure

1. *Dietary exposure*. For the purposes of assessing the potential chronic dietary exposure for all existing and pending tolerances for lambda-cyhalothrin, Zeneca has utilized available information on anticipated residues (FDA monitoring data, average field trial residues and processing data) and percent crop treated. For the acute dietary assessment, a Monte Carlo method was used to estimate exposure.

i. *Food* —a. *Acute dietary exposure*. An acute dietary exposure assessment was made using the dietary exposure evaluation model (DEEM) computer software (Novigen Sciences Inc.) and the USDA Continuing Surveys of Individual Intakes (CSFII) 1994–96. Acute dietary exposure was based on all crops with tolerances for lambda-cyhalothrin established at 40 CFR 180.438 together with crops in this petition, canola, and the crop groupings pome fruit, stone fruit and tree nuts. Anticipated residues were estimated from field trial data and from the lambda-cyhalothrin national milk survey together with estimates of percent crop treated for each crop. The predicted acute exposure for the U.S. population was 0.001269 mg/kg/body weight/day (mg/kg/bwt/day). The population subgroup with the highest predicted level of acute exposure was non-nursing infants (<1 year old) with an exposure of 0.003599 mg/kg/bwt/day (99.9th percentile). Based on an acute NOAEL of 0.5 mg/kg/bwt/day from a 1-year dog feeding study, and a 100–fold safety factor, the acute reference dose (aRfD) is 0.005 mg/kg/bwt/day. For the U.S. population the predicted exposure is equivalent to 25% of the aRfD. For the population subgroup non-nursing infants (<1 year old) the exposure is equivalent to 72% of the aRfD. Because the predicted exposures, expressed as the percentages of the aRfD, are well below 100%, there is reasonable certainty that no acute effects would result from the dietary exposure to lambda-cyhalothrin.

b. *Chronic dietary exposure*. A chronic dietary exposure assessment was made using the DEEM computer software (Novigen Sciences Inc.). Chronic dietary exposure was based on all crops with tolerances for lambda-cyhalothrin established at 40 CFR 180.438 together with crops in this petition, canola, and the crop groupings pome fruit, stone fruit and tree nuts. Anticipated residues were estimated from field trial data and from the lambda-cyhalothrin national milk survey together with estimates of percent crop treated for each crop. The predicted chronic exposure for the U.S. population was 0.000062 mg/kg/bwt/day. The population subgroup with the highest predicted level of chronic exposure was non-nursing infants with an exposure of 0.000132 mg/kg/bwt/day. Based on a chronic NOAEL of 0.1 mg/kg/bwt/day from a 1-year dog feeding study, and a 100-fold safety factor, the chronic reference dose (cRfD) is 0.001 mg/kg/bwt/day. For the U.S. population the predicted exposure is equivalent to 6.2% of the cRfD. For the population subgroup non-nursing infants the exposure is equivalent to 13.2% of the cRfD. Because the predicted exposures, expressed as the percentages of the aRfD, are well below 100%, there is reasonable certainty that no chronic effects would result from the dietary exposure to lambda-cyhalothrin.

ii. *Drinking water*. Laboratory and field data have demonstrated that lambda-cyhalothrin and its degradates are immobile in soil and will not leach into ground water. Surface water estimates were made by EPA using the GENEEC model (Tier I). The predicted peak, average and annual values (56 days) are, respectively, 0.095 parts per billion (ppb), 0.003 ppb and <0.003 ppb. EPA uses drinking water levels of comparison (DWLOCs) as a surrogate measure to capture risk associated with exposure to pesticides in drinking water. A DWLOC is the concentration of a pesticide in drinking water that would be acceptable as an upper limit in light of total aggregate exposure to that pesticide from food, water, and residential uses. A DWLOC will vary depending on the residue level in foods, the toxicity endpoint and with drinking water consumption patterns and body weights for specific subpopulations. The acute DWLOC for lambda-cyhalothrin was calculated for the subpopulation of concern, non-nursing infants (<1 year old), to be 14 ppb. The chronic DWLOC was calculated for this subpopulation to be 9 ppb. The predicted maximum concentration of lambda-cyhalothrin in drinking water is 0.095 ppb which is much lower than the acute DWLOC. Therefore one can conclude with reasonable certainty that residues of lambda-cyhalothrin do not contribute significantly to the aggregate acute human health risk. The chronic DWLOC for the most sensitive subpopulation, non-nursing infants (<1 year old), is 9 ppb. This DWLOC is substantially higher than the predicted average concentration of lambda-cyhalothrin in surface water of 0.003 ppb. Therefore one can conclude with reasonable certainty that residues of lambda-cyhalothrin do not contribute significantly to the aggregate chronic human health risk.

2. *Non-dietary exposure*. Other potential sources of exposure are from non-occupational sources such as structural pest control and ornamental plant and lawn use of lambda-cyhalothrin. A risk assessment was performed by EPA published in the **Federal Register** January 29, 1999 (64 FR 4584) (FRL–6056–2), for post application activities on lawns treated

with lambda-cyhalothrin which is considered to be a worse case estimate of exposure from residential uses. Results from EPA's short-term exposure and risk assessments showed that the oral MOE (margin of exposure) for infants and children was 3,500, the dermal MOEs were 1.5 million for the U.S. population and 7,810 for infants and children, and the inhalation MOEs were 15,000 for the U.S. population and 4,800 for infants and children. For intermediate-term exposure and risk assessments, EPA concluded the oral MOEs for infants and children was 700, the dermal MOEs were 1.5 million for the U.S. population and 7,810 for infants and children, and the inhalation MOEs were 15,000 for the U.S. population and 4,800 for infants and children. EPA concludes that there is a reasonable certainty of no harm for MOEs of 100 or greater. Therefore, the non-dietary and overall aggregate risk assessments for lambda-cyhalothrin clearly indicates a reasonable certainty of no harm.

D. Cumulative Effects

Zeneca Ag Products will submit information for EPA to consider concerning potential cumulative effects of lambda-cyhalothrin consistent with the schedule established by EPA in the **Federal Register** of August 4, 1997 (62 FR 42020) (FRL–5734–6), and other EPA publications pursuant to the Food Quality Protection Act. At this time, Zeneca cannot make a determination based on available and reliable information that lambda-cyhalothrin and other substances that may have a common mechanism of toxicity would have cumulative effects. Therefore for purposes of this request it is appropriate only to consider the potential risks of lambda-cyhalothrin in an aggregate exposure assessment.

E. Safety Determination

1. *U.S. population*. Based on the completeness and reliability of the lambda-cyhalothrin toxicology data base and using the conservative aggregate exposure assumptions presented earlier, it is concluded that lambda-cyhalothrin products may be used with a reasonable certainty of no harm relative to exposures from food and drinking water. A chronic dietary exposure and risk assessment has been performed for lambda-cyhalothrin using EPA's cRfD of 0.001 mg/kg/bwt/day. Available information on anticipated residues, monitoring data and percent crop treated was incorporated into the analysis to estimate the Anticipated Residue Contribution (ARC). The ARC is generally considered a more realistic estimate than an estimate based on tolerance level residues. The ARC from established tolerances and the current and pending actions are estimated to be 0.000062 mg/kg/bwt/day and utilize 6.2% of the cRfD. An acute dietary exposure and risk assessment has been performed for lambda-cyhalothrin using EPA's aRfD of 0.005 mg/kg/bwt/day. The ARC from established tolerances and the current and pending actions are estimated to be 0.001269 and utilize 25% of the aRfD. The acute and chonic DWLOC for lambda-cyhalothrin for the U.S. population are 131 ppb and 33 ppb, respectively. The maximum concentrations in drinking water predicted by EPA are substantially lower than either the acute or chronic DWLOC. Therefore, one can conclude with reasonable certainty that residues of lambda-cyhalothrin in drinking water would not contribute significantly to the aggregate acute or chronic human health risk. In conclusion, there is a reasonable certainty of no harm to the general population resulting from either acute or chronic aggregate exposure to lambda-cyhalothrin.

2. *Infants and children*. FFDCA section 408 provides that EPA shall apply an additional ten-fold margin of safety for infants and children in the case of threshold effects to account for prenatal and postnatal toxicity and the completeness of the data base unless EPA determines that a different margin of safety will be safe for infants and children. EPA generally defines the level of appreciable risk as exposure that is greater than 1/100 of the NOAEL in the animal study appropriate to the particular risk assessment. This hundred-fold uncertainty (safety) factor/margin of exposure is designed to account for combined interspecies and intraspecies variability. EPA believes that reliable data support using the standard hundred-fold margin/factor and not the additional tenfold margin/factor when EPA has a complete data base under existing guidelines and when the severity of the effect in infants and children or the potency or unusual toxic properties of a compound do not raise concerns regarding the adequacy of the standard margin/factor.

In assessing the potential for additional sensitivity of infants and children to residues of lambda-cyhalothrin, EPA considered the data from oral developmental toxicity studies in the rat and rabbit, as well as data from a multi-generation reproduction study in the rat. The developmental toxicity studies are designed to evaluate adverse effects in the developing organism resulting from pesticide exposure during prenatal development in the mothers. Reproduction studies provide information relating to effects from exposure to the pesticide on the reproductive capability of mating animals and data on systemic toxicity.

3. *Prenatal effects*. A developmental toxicity study in rats given gavage doses of 0, 5, 10, and 15 mg/kg/day with no developmental toxicity observed under the conditions of the study. The developmental NOAEL is greater than 15 mg/kg/day, the highest dose tested. The maternal NOAEL and LOAEL are established at 10 and 15 mg/kg/day, respectively, based on reduced body weight gain.

A developmental toxicity study in rabbits given gavage doses of 0, 3, 10, and 30 mg/kg/day with no developmental toxicity observed under the conditions of the study. The maternal NOAEL and LOAEL are established at 10 and 30 mg/kg/day, respectively based on decreased body weight gain. The developmental NOAEL is greater than 30 mg/kg/day, the highest dose tested.

4. *Postnatal effects*. A 3–generation reproduction study in rats fed diets containing 0, 10, 30, and 100 ppm with no developmental toxicity observed at 100 ppm, the highest dose tested. The maternal NOAEL and LOAEL for the study are established at 30 (1.5 mg/kg/day) and 100 ppm (5 mg/kg/day), respectively, based upon decreased parental body weight gain. The reproductive NOAEL and LOAEL are established at 30 (1.5 mg/kg/day) and 100 ppm (5 mg/kg/day), respectively, based on decreased pup weight gain during weaning.

EPA have concluded in its 1997 review of lambda-cyhalothrin that the toxicity endpoints from the data on developmental and reproductive toxicity tests do not indicate any increased prenatal or postnatal sensitivity. Therefore, EPA concluded that reliable data support use of a hundred fold safety factor and that an additional tenfold safety factor is not needed.

Based on this information, the ARC for children aged 1 to 6 years old, and non-nursing infants (subgroups most highly exposed) utilizes 0.000127 mg/kg/bwt/day (12.7% of the cRfD) and 0.000132 mg/kg/bwt/day (13.2% of the cRfD), respectively. Generally speaking, the Agency has no cause for concern if the anticipated residues contribution for all published and proposed tolerances is less than the 100% of the cRfD.

For the acute dietary assessment the ARC for children aged 1 to 6 years old, and non-nursing infants (subgroups most highly exposed) utilizes 0.002363 mg/kg/bwt/day (47.3% of the aRfD) and

0.003599 mg/kg/bwt/day (72% of the aRfD), respectively. Generally speaking, the Agency has no cause for concern if the anticipated residues contribution for all published and proposed tolerances is less than the 100% of the aRfD. The acute and chonic DWLOC for lambda-cyhalothrin for non-nursing infants are 14 ppb and 9 ppb, respectively. The maximum concentrations in drinking water predicted by EPA are substantially lower than either the acute or chronic DWLOC. Based on these exposure estimates it may be concluded that there is a reasonable certainty that no harm will result to infants and children from aggregate exposures to lambda-cyhalothrin.

F. International Tolerances

There are Codex maximum residue levels (MRL) established or pending for residues of cyhalothrin, as the sum of all isomers, in or on the following crops and commoditites.

Crop	MRL (mg/kg)
Apricots	0.2
Cabbage, head	0.2
Cherries	0.2
Cotton seed	0.02
Cotton seed, oil	0.02
Oil seed (including rapeseed oil).	0.02
Peaches	0.2
Plums	0.1
Pome fruit	0.1
Potatoes	0.02
Tree nuts (shelled and unshelled).	0.05

Canadian MRLs of 0.1 ppm for pome fruit, stone fruit and canola are established in Canada for lambda-cyhalothrin based on the ''negligble'' residue clause of Canadian Food & Drug Act Regulations (B.15.002(1)).

[FR Doc. 00–11871 Filed 5–11–00; 8:45 am]

BILLING CODE 6560–50–F

FEDERAL COMMUNICATIONS COMMISSION

Notice of Public Information Collection(s) Being Reviewed by the Federal Communications Commission, Comments Requested

May 3, 2000.

SUMMARY: The Federal Communications Commission, as part of its continuing effort to reduce paperwork burden invites the general public and other Federal agencies to take this opportunity to comment on the following information collection, as required by the Paperwork Reduction Act of 1995, Public Law 104–13. An agency may not conduct or sponsor a collection of information unless it displays a currently valid control number. No person shall be subject to any penalty for failing to comply with a collection of information subject to the Paperwork Reduction Act (PRA) that does not display a valid control number. Comments are requested concerning (a) whether the proposed collection of information is necessary for the proper performance of the functions of the Commission, including whether the information shall have practical utility; (b) the accuracy of the Commission's burden estimate; (c) ways to enhance the quality, utility, and clarity of the information collected; and (d) ways to minimize the burden of the collection of information on the respondents, including the use of automated collection techniques or other forms of information technology.

DATES: Written comments should be submitted on or before July 11, 2000. If you anticipate that you will be submitting comments, but find it difficult to do so within the period of time allowed by this notice, you should advise the contact listed below as soon as possible.

ADDRESSES: Direct all comments to Les Smith, Federal Communications Commission, 445 12th Street, SW., Room 1–A804, Washington, DC 20554 or via the Internet to lesmith@fcc.gov.

FOR FURTHER INFORMATION CONTACT: For additional information or copies of the information collections contact Les Smith at (202) 418–0217 or via the Internet at lesmith@fcc.gov.

SUPPLEMENTARY INFORMATION:

OMB Approval Number: 3060–0783.

Title: Section 90.176 Coordination notification requirements on frequencies below 512 MHz.

Form Number: N/A.

Type of Review: New collection.

Respondents: Business or other for-profit.

Number of Respondents: 15.

Estimated Time Per Response: .25 hours.

Total Annual Burden: 975 hours.

Total Annual Cost: 0.

Needs and Uses: The reporting requirement in section 90.176 is a result of comments sought in the Report and Order and Further Notice of Proposed Rule Making in PR Dck No. 92–235 and requires each Private Land Mobile frequency coordinator provide, within one business day, a listing of their frequency recommendations to all other frequency coordinators in their respective pool, and, if requested, an engineering analyses. This requirement is necessary to avoid situations where harmful interference is created because two or more coordinators recommend the same frequency in the same area at approximately the same time to different applicants.

OMB Approval Number: 3060–0798.

Title: FCC Application for Wireless Telecommunications Bureau Radio Service Authorization.

Form Number: FCC 601.

Type of Review: Revision of an existing collection.

Respondents: Individuals or households; Business or other for-profit; Not-for-profit institutions; State, Local or Tribal Government.

Number of Respondents: 240,320.

Estimated Time Per Response: 1.25 hours.

Total Annual Burden: 210,280 hours.

Needs and Uses: FCC 601 is used as the general application (long form) for market based licensing and site-by-site licensing in the Wireless Telecommunications Radio Services. The purpose of this revision is to make the necessary changes for the 700 MHz Band and 700 MHz Guard Band Auctions and to convert the Land Mobile Services (Part 90) to ULS. We sought emergency clearance on these changes in order to allow form changes to be in place for the auctions scheduled for the beginning of June and are now seeking a 3 year clearance. The information is used by the Commission to determine whether the applicant is legally, technically and financially qualified to be licensed.

Respondent costs are estimated to be $48,364,000, which includes application filing fees.

OMB Control Number: 3060–0773.

Title: Marketing of RF Devices Prior to Equipment Authorization—Section 2.830.

Form Number: N/A.

Type of Review: Extension of currently approved collection.

Respondents: Businesses or other for-profit entities.

Number of Respondents: 6,000.

Estimated Time Per Response: .5 hour.

Total Annual Burden: 3,000 hours.

Total Annual Cost: N.A.

Needs and Uses: FCC rules permit the display and advertising of radio frequency devices prior to equipment authorization or a determination of compliance with the rules, providing that the advertising or display contains a conspicuous notice as specified by the rules. The notice that must be displayed is defined in section 2.803©. A notice that applies specifically to prototype equipment is defined in section

2.803©(2) of any RF device that is offered for sale to specific entities defined in the rule part, prior to equipment authorization or a showing of compliance, must be accompanied by a written notice that the equipment is subject to the FCC rules and will comply with all FCC rules prior to delivery. The information is disclosed to third parties to ensure that they are fully aware of the FCC's requirement for the responsible party to fully comply with the Commission rules.

Federal Communications Commission.

Magalie Roman Salas,

Secretary.

[FR Doc. 00–11973 Filed 5–11–00; 8:45 am]

BILLING CODE 6712–01–U

FEDERAL COMMUNICATIONS COMMISSION

Public Information Collections Approved by Office of Management and Budget

May 5, 2000.

The Federal Communications Commission (FCC) has received Office of Management and Budget (OMB) approval for the following public information collections pursuant to the Paperwork Reduction Act of 1995, Public Law 104–13. An agency may not conduct or sponsor and a person is not required to respond to a collection of information unless it displays a currently valid control number. For further information contact Shoko B. Hair, Federal Communications Commission (202) 418–1379.

Federal Communications Commission

OMB Control No.: 3060–0737.

Expiration Date: 03/31/2003.

Title: Disclosure Requirements for Information Services Provided Under a Presubscription of Comparable Arrangement.

Form No.: N/A.

Respondents: Business or other for profit.

Estimated Annual Burden: 1,000 respondents; 5 hours per response (avg.); 5,000 total annual burden hours for this collection.

Estimated Annual Reporting and Recordkeeping Cost Burden: $0.

Frequency of Response: On occasion; Third Party Disclosure.

Description: Section 228 of the Communications Act of 1934, as amended, implements rules governing common carriers' transmission of and billing and collection for interstate pay-per-call and other information services. The statutory requirements are codified in Part 64 of the Commission's rules. Pursuant to Section 64.1501(b), presubscription is a contractual agreement between an informed consumer and an information provider for the purchase of information services. Under Section 64.1501(b), an information provider must disclose the following information to a consumer to establish a valid presubscription arrangement: ''all material terms and conditions associated with the use of the service, including the service provider's name and address, a business telephone number which the consumer may use to obtain additional information or to register a complaint, and the rates for the service,* * * any future rate changes, * * * [and] an identification number or other means to prevent unauthorized access to the service by nonsubscribers * * * '' 47 CFR 64.1501(b). All prescription arrangements must be executed in writing or, alternatively, through payment by direct remittance, prepaid account, or debit, credit, charge, or calling card. The purpose of the information collection is to ensure that consumers receive enough information to make an informed decision whether to subscribe to an information service.

The Commission believes that past acts of widespread deception and abuse involving provision of information services, warrant safeguards such as these to guard against future efforts to evade federal pay-per-call regulations.

Obligation to Respond: Mandatory

Public burden for the collection is as noted above. Send comments regarding the burden estimate or any other aspect of the collections of information, including suggestions for reducing the burden to Performance Evaluation and Records Management, Washington, DC 20554.

Federal Communications Commission.

Magalie Roman Salas,

Secretary.

[FR Doc. 00–11975 Filed 5–11–00; 8:45 am]

BILLING CODE 6712–01–P

FEDERAL COMMUNICATIONS COMMISSION

Notice of Public Information Collection(s) Being Submitted to OMB for Review and Approval

May 4, 2000.

SUMMARY: The Federal Communications Commissions, as part of its continuing effort to reduce paperwork burden invites the general public and other Federal agencies to take this opportunity to comment on the following information collection, as required by the Paperwork Reduction Act of 1995, Public Law 104–13. An agency may not conduct or sponsor a collection of information unless it displays a currently valid control number. No person shall be subject to any penalty for failing to comply with a collection of information subject to the Paperwork Reduction Act (PRA) that does not display a valid control number. Comments are requested concerning (a) whether the proposed collection of information is necessary for the proper performance of the functions of the Commission, including whether the information shall have practical utility; (b) the accuracy of the Commission's burden estimate; (c) ways to enhance the quality, utility, and clarity of the information collected; and (d) ways to minimize the burden of the collection of information on the respondents, including the use of automated collection techniques or other forms of information technology.

DATES: Written comments should be submitted on or before June 12, 2000. If you anticipate that you will be submitting comments, but find it difficult to do so within the period of time allowed by this notice, you should advise the contact listed below as soon as possible.

ADDRESSES: Direct all comments to Les Smith, Federal Communications Commission, Room 1–A804, 445 12th Street, SW, Washington, DC 20554 or via the Internet to *lesmith@fcc.gov.*

FOR FURTHER INFORMATION CONTACT: For additional information or copies of the information collections contact Les Smith at (202) 418–0217 or via the Internet at *lesmith@fcc.gov.*

SUPPLEMENTARY INFORMATION:

OMB Control Number: 3060–0758.

Title: Amendment of part 5 of the Commission's Rules to Revise the Experimental Radio Service Regulations, ET Docket 96–256.

Form Number: N/A.

Type of Review: Extension of a currently approved collection.

Respondents: Business or other for-profit entities; and Not-for-profit institutions.

Number of Respondents: 425.

Estimate Time Per Response: 0.10 to 0.25 hours.

Frequency of Response: On occasion reporting requirements; Third part disclosure.

Total Annual Burden: 681 hours.

Total Annual Costs: None.

Needs and Uses: The collection of information contained in part 5 is made necessary by sections 5.75, 5.85(d),

5.85(e), and 5.93(b) of the FCC's Rules governing the Experimental Radio Service. They are as follows: (1) Pursuant to section 5.75, if a blanket license is granted, licensees are required to notify the Commission of the specific details of each individual experiment, including location, number of base and mobile units, power emission designator, and any other pertinent technical information not specified by the blanket license; (2) pursuant to section 5.85(d), when applicants are using public safety frequencies to perform experiments of a public safety nature, the license may be conditioned to require coordination between the experimental licensee and appropriate frequency coordinator and/or all public safety licensees in its area of operation; (3) pursuant to section 5.85(e), the Commission may, at its discretion, condition any experimental license or special temporary authority (STA) on the requirement that before commencing operation, the new licensee coordinate its proposed facility with other licensees that may receive interference as a result of the new licensee's operations; and (4) pursuant to section 5.93(b), unless otherwise stated in the instrument of authorization, licenses granted for the purpose of limited market studies requires the licensee to inform anyone participating in the experiment that the service or device is granted under an experimental authorization and is strictly temporary. In all cases, it is the responsibility of the licensee to coordinate with other users.

Federal Communications Commission.

Magalie Roman Salas,

Secretary.

[FR Doc. 00–11972 Filed 5–11–00; 8:45 am]

BILLING CODE 6712–01–U

FEDERAL COMMUNICATIONS COMMISSION

[Report No. AUC–00–33–D (Auction No. 33); DA 00–941]

Auction of Licenses for the 700 MHz Guard Bands Postponed Until September 6, 2000

AGENCY: Federal Communications Commission.

SUMMARY: This document postpones the upcoming auction of Guard Band Manager licenses originally scheduled to begin June 14, 2000, in order to provide additional time for bidder preparation and planning. The auction is rescheduled to begin September 6, 2000.

DATES: Auction No. 33 will begin September 6, 2000.

FOR FURTHER INFORMATION CONTACT: Howard Davenport, Auctions Legal Branch at (202) 418–0660, or Kathy Garland, Auctions Operations at (717) 338–2888.

SUPPLEMENTARY INFORMATION: This is a summary of a Public Notice released May 2, 2000. The complete text of the public notice is available for inspection and copying during normal business hours in the FCC Reference Center (Room CY-A257), 445 12th Street, SW., Washington, DC 20554. It may also be purchased from the Commission's copy contractor, International Transcription Services, Inc. (ITS, Inc.) 1231 20th Street, NW., Washington, DC 20036, (202) 857–3800. It is also available on the Commission's web site at *http://www.fcc.gov.*

1. The upcoming auction of licenses in the 746–747/776–777 and 762–764/792–794 MHz bands, scheduled to begin on June 14, 2000, is postponed until September 6, 2000, in order to provide additional time for bidder preparation and planning. Therefore, the FCC Form 175 application filing window for Auction No. 33 is now closed. Any applications that were in the system will be deemed ineffective and purged from the system. Applicants wishing to participate must file in compliance with the deadlines listed. The new filing window for FCC Form 175 will open on July 18, 2000. The new schedule is as follows:

Filing Deadline for FCC Form 175—August 1, 2000; 6 pm ET.

Upfront Payment Deadline—August 18, 2000; 6 pm ET.

Orders For Remote Bidding Software—August 21, 2000; 6 pm ET.

Mock Auction—August 31, 2000.

Auction Start Date—September 6, 2000.

Federal Communications Commission.

Louis J. Sigalos,

Deputy Chief, Auctions & Industry Analysis Division.

[FR Doc. 00–11970 Filed 5–11–00; 8:45 am]

BILLING CODE 6712–01–U

FEDERAL COMMUNICATIONS COMMISSION

[Report No. AUC–00–31–F (Auction No. 31); DA 00–942]

Auction of Licenses for the 747–762 and 777–792 MHz Bands Postponed Until September 6, 2000

AGENCY: Federal Communications Commission.

SUMMARY: This document postpones the upcoming auction of licenses in the 747–762 and 777–792 bands originally scheduled to begin June 7, 2000, in order to provide additional time for bidder preparation and planning. The auction is rescheduled to begin September 6, 2000.

DATES: Auction No. 31 will begin September 6, 2000.

FOR FURTHER INFORMATION CONTACT: Howard Davenport, Auctions Legal Branch at (202) 418–0660, or Kathy Garland, Auctions Operations at (717) 338–2888.

SUPPLEMENTARY INFORMATION: This is a summary of a Public Notice released May 2, 2000. The complete text of the public notice is available for inspection and copying during normal business hours in the FCC Reference Center (Room CY-A257), 445 12th Street, SW., Washington, DC 20554. It may also be purchased from the Commission's copy contractor, International Transcription Services, Inc. (ITS, Inc.) 1231 20th Street, NW., Washington, DC 20036, (202) 857–3800. It is also available on the Commission's web site at *http://www.fcc.gov.*

1. The upcoming auction of licenses in the 747–762 and 777–792 MHz band, scheduled to begin on June 7, 2000, is postponed until September 6, 2000, in order to provide additional time for bidder preparation and planning. Therefore, the FCC Form 175 application filing window for Auction No. 31 is now closed. Any applications that were in the system will be deemed ineffective and purged from the system. Applicants wishing to participate must file in compliance with the deadlines listed. The new filing window for FCC Form 175 will open on July 17, 2000. The new schedule is as follows:

Filing Deadline for FCC Form 175—August 1, 2000; 6 pm ET.

Upfront Payment Deadline—August 18, 2000; 6 pm ET.

Orders For Remote Bidding Software—August 21, 2000; 6 pm ET.

Mock Auction—August 31, 2000.

Auction Start Date—September 6, 2000.

Federal Communications Commission.

Louis J. Sigalos,

Deputy Chief, Auctions & Industry Analysis Division.

[FR Doc. 00–11971 Filed 5–11–00; 8:45 am]

BILLING CODE 6712–01–U

FEDERAL COMMUNICATIONS COMMISSION

[DA–00–1012, MM Docket No. 00–76, RM–9809]

Digital Television Broadcast Service; Urbana, IL

AGENCY: Federal Communications Commission.

ACTION: Proposed rule.

SUMMARY: The Commission requests comments on a petition filed by the University of Illinois Board of Trustees, licensee of noncommercial educational station WILL–TV, NTSC Channel *12, Urbana, Illinois, requesting the substitution of DTV Channel *9 for DTV Channel *33. DTV Channel *9 can be allotted to Urbana, Illinois, in compliance with the principle community coverage requirements of section 73.625(a) at coordinates 40–02–18 N and 88–40–10 W with a power of 30 (kW) and a height above average terrain (HAAT) 302 meters.

DATES: Comments must be filed on or before July 3, 2000, and reply comments on or before July 19, 2000.

ADDRESSES: Federal Communications Commission, 445 12th Street, SW, Room TW–A325, Washington, DC 20554. In addition to filing comments with the FCC, interested parties should serve the petitioner, or its counsel or consultant, as follows: Wayne Coy, Jr., Cohn and Marks, Suite 300, 1920 N Street, NW, Washington, DC 20036–1622 (Counsel for The University of Illinois Board of Trustees).

FOR FURTHER INFORMATION CONTACT: Pam Blumenthal, Mass Media Bureau, (202) 418–1600.

SUPPLEMENTARY INFORMATION: This is a synopsis of the Commission's Notice of Proposed Rule Making, MM Docket No. 00–76, adopted May 9, 2000, and released May 10, 2000. The full text of this Commission decision is available for inspection and copying during normal business hours in the FCC Reference Center 445 12th Street, SW, Washington, DC. The complete text of this decision may also be purchased from the Commission's copy contractor, International Transcription Services, Inc., (202) 857–3800, 1231 20th Street, NW, Washington, DC 20036.

Provisions of the Regulatory Flexibility Act of 1980 do not apply to this proceeding.

Members of the public should note that from the time a Notice of Proposed Rule Making is issued until the matter is no longer subject to Commission consideration or court review, all *ex parte* contacts are prohibited in Commission proceedings, such as this one, which involve channel allotments. See 47 CFR 1.1204(b) for rules governing permissible *ex parte contacts.*

For information regarding proper filing procedures for comments, see 47 CFR 1.415 and 1.420.

Federal Communications Commission.

Barbara A. Kreisman,

Chief, Video Services Division, Mass Media Bureau.

[FR Doc. 00–11974 Filed 5–11–00; 8:45 am]

BILLING CODE 6712–01–P

FEDERAL EMERGENCY MANAGEMENT AGENCY

[FEMA–1326–DR]

Maine; Major Disaster and Related Determinations

AGENCY: Federal Emergency Management Agency (FEMA).

ACTION: Notice.

SUMMARY: This is a notice of the Presidential declaration of a major disaster for the State of Maine (FEMA–1326-DR), dated April 28, 2000, and related determinations.

EFFECTIVE DATE: April 28, 2000.

FOR FURTHER INFORMATION CONTACT: Madge Dale, Response and Recovery Directorate, Federal Emergency Management Agency, Washington, DC 20472, (202) 646–3772.

SUPPLEMENTARY INFORMATION: Notice is hereby given that, in a letter dated April 28, 2000, the President declared a major disaster under the authority of the Robert T. Stafford Disaster Relief and Emergency Assistance Act (42 U.S.C. 5121 *et seq.*), as follows:

I have determined that the damage in certain areas of the State of Maine, resulting from severe storms, flooding, and ice jams beginning on March 28, 2000, and continuing is of sufficient severity and magnitude to warrant a major disaster declaration under the Robert T. Stafford Disaster Relief and Emergency Assistance Act, Pub. L. 93–288, as amended (''the Stafford Act''). I, therefore, declare that such a major disaster exists in the State of Maine.

In order to provide Federal assistance, you are hereby authorized to allocate from funds available for these purposes, such amounts as you find necessary for Federal disaster assistance and administrative expenses.

You are authorized to provide Public Assistance and Hazard Mitigation in the designated areas and any other forms of assistance under the Stafford Act you may deem appropriate. Consistent with the requirement that Federal assistance be supplemental, any Federal funds provided under the Stafford Act for Public Assistance or Hazard Mitigation will be limited to 75 percent of the total eligible costs.

Further, you are authorized to make changes to this declaration to the extent allowable under the Stafford Act.

Notice is hereby given that pursuant to the authority vested in the Director of the Federal Emergency Management Agency under Executive Order 12148, I hereby appoint A. David Rodham of the Federal Emergency Management Agency to act as the Federal Coordinating Officer for this declared disaster.

I do hereby determine the following areas of the State of Maine to have been affected adversely by this declared major disaster:

Androscoggin, Aroostook, Franklin, Kennebec, Oxford, and Somerset Counties for Public Assistance.

All counties within the State of Maine are eligible to apply for assistance under the Hazard Mitigation Grant Program.

(The following Catalog of Federal Domestic Assistance Numbers (CFDA) are to be used for reporting and drawing funds: 83.537, Community Disaster Loans; 83.538, Cora Brown Fund Program; 83.539, Crisis Counseling; 83.540, Disaster Legal Services Program; 83.541, Disaster Unemployment Assistance (DUA); 83.542, Fire Suppression Assistance; 83.543, Individual and Family Grant (IFG) Program; 83.544, Public Assistance Grants; 83.545, Disaster Housing Program; 83.548, Hazard Mitigation Grant Program.)

James L. Witt,

Director.

[FR Doc. 00–11990 Filed 5–11–00; 8:45 am]

BILLING CODE 6718–02–P

FEDERAL EMERGENCY MANAGEMENT AGENCY

[FEMA–1324–DR]

Maryland; Amendment No. 2 to Notice of a Major Disaster Declaration

AGENCY: Federal Emergency Management Agency (FEMA).

ACTION: Notice.

SUMMARY: This is a notice of the Presidential declaration of a major disaster for the State of Maryland (FEMA–1324–DR), dated April 10, 2000, and related determinations.

EFFECTIVE DATE: May 3, 2000.

FOR FURTHER INFORMATION CONTACT: Madge Dale, Response and Recovery Directorate, Federal Emergency Management Agency, Washington, DC 20472, (202) 646–3772.

SUPPLEMENTARY INFORMATION: The notice of a major disaster for the State of Maryland is hereby amended to include the following area among those areas determined to have been adversely affected by the catastrophe declared a

major disaster by the President in his declaration of April 10, 2000:

Caroline County for emergency protective measures (Category B) under Public Assistance.

(The following Catalog of Federal Domestic Assistance Numbers (CFDA) are to be used for reporting and drawing funds: 83.537, Community Disaster Loans; 83.538, Cora Brown Fund Program; 83.539, Crisis Counseling; 83.540, Disaster Legal Services Program; 83.541, Disaster Unemployment Assistance (DUA); 83.542, Fire Suppression Assistance; 83.543, Individual and Family Grant (IFG) Program; 83.544, Public Assistance Grants; 83.545, Disaster Housing Program; 83.548, Hazard Mitigation Grant Program.)

Lacy E. Suiter,

Executive Associate Director, Response and Recovery Directorate.

[FR Doc. 00–11989 Filed 5–11–00; 8:45 am]

BILLING CODE 6718–02–P

FEDERAL EMERGENCY MANAGEMENT AGENCY

National Flood Insurance Program Call for Issues Final Report

AGENCY: Federal Emergency Management Agency (FEMA).

ACTION: Notice.

SUMMARY: We (FEMA) announce when and how our final report on the National Flood Insurance Program (NFIP)'s Call for Issues will be available to the public.

DATES: On June 15, 2000, we will post the report on our web site and will begin accepting orders for copies of the final report.

By August 1, 2000, we will make an initial distribution of the final report to each of the 173 respondents. We will respond to orders from the public during the fourth quarter of this fiscal year.

ADDRESSES: To place orders for the final NFIP Call for Issues report please contact the FEMA Distribution Center, P.O. Box 2012, Jessup, MD 20794.

FOR FURTHER INFORMATION CONTACT:

H. Joseph Coughlin, Jr., Assistant to the Federal Insurance Administrator, Federal Emergency Management Agency, 500 C Street SW., Washington, DC 20472; (202) 646–3449, (facsimile) (202) 646–7970, or (email) *joseph.coughlin@fema.gov;* or

Michael Robinson, Acting Chief, Policy Branch, Program Assessment and Outreach Division, the Mitigation Directorate, Federal Emergency Management Agency, 500 C Street SW., Washington, DC 20472; (202) 646–2716, (facsimile) (202) 646–2577, or (email) *mike.robinson@fema.gov.*

SUPPLEMENTARY INFORMATION: On September 9, 1998, we published at 63 FR 48222 a notice inviting the public to recommend how the National Flood Insurance Program (NFIP) may be even more effective than now. During the comment period, we received recommendations from 173 respondents. Those respondents submitted 796 recommendations spanning the insurance, mapping, and floodplain management components of the NFIP. We analyzed and evaluated extensively the public's comments and recommendations for the NFIP. In a number of cases, we adopted or will adopt the public's recommendation on how to improve a specific aspect of the program. In many other cases, we had anticipated the recommendation with initiatives planned or already underway when we received the recommendation. In other cases, we did not adopt the public's recommendation either because we do not believe it was in the best interests of the program or because we are addressing the recommendation in some other way. The final report contains:

- The public's recommendation to improve aspects of the NFIP,
- Our decision whether to adopt the public's recommendation, including our planned implementation or actual progress, and
- An explanation of our decision.

On June 15, 2000, we will post the final report on NFIP's Call for Issues on FEMA's web site, *http://www.fema.gov/,* and we will begin to accept orders for copies of the final report from members of the public who did not submit written comments during our call for issues. By August 1, 2000, we will send a copy of the final report to each of the 173 respondents who submitted written recommendations on how to improve the NFIP. We will respond to orders for the report from the public in the fourth quarter of this fiscal year.

A number of decisions contained in the report reflect a partial or future action that we will take and not the completed action to implement our decision. We will therefore publish an annual update to show our progress in implementing all recommendations that we have adopted—both the work completed since our last update and the current status of efforts underway but not yet finished. We will continue to publish these annual updates until we complete the final action on all adopted recommendations submitted during this call for issues on the NFIP.

We appreciate very much the comments and recommendations that we received and want to thank all those who participated for their time, effort and insights.

Dated: May 3, 2000.

Jo Ann Howard,

Administrator, Federal Insurance Administration.

Michael Armstrong,

Associate Director, Mitigation Directorate.

[FR Doc. 00–11987 Filed 5–11–00; 8:45 am]

BILLING CODE 6718–03–P

FEDERAL MARITIME COMMISSION

Ocean Transportation Intermediary License; Applicant

Notice is hereby given that the following applicant has filed with the Federal Maritime Commission an application for license as Non-Vessel Operating Common Carrier and Ocean Freight Forwarder—Ocean Transportation Intermediary pursuant to section 19 of the Shipping Act of 1984 as amended (46 U.S.C. app. 1718 and 46 CFR 515).

Persons knowing of any reason why the following applicant should not receive a license are requested to contact the Office of Transportation Intermediaries, Federal Maritime Commission, Washington, DC 20573.

Non-Vessel Operating Common Carrier and Ocean Freight Forwarder Transportation Intermediary Applicant

Pactrans Marine, Inc., 12801 S. Fiqueroa Street, Los Angeles, CA 90061.
Officers: Jesse Domingo, Director (Qualifying Individual), Chee Tao Tsui, President.

Dated: May 9, 2000.

Bryant L. VanBrakle,

Secretary.

[FR Doc. 00–11991 Filed 5–11–00; 8:45 am]

BILLING CODE 6730–01–P

DEPARTMENT OF HEALTH AND HUMAN SERVICES

Office of the Secretary; Office of Public Health and Science

Statement of Organization, Functions, and Delegations of Authority

Part A, (Office of the Secretary) of the Statement of Organization, Functions, and Delegations of Authority for the Department of Health and Human Services, Chapter AC, Office of Public Health and Science (OPHS), paragraph ACA, Immediate Office, as last amended at 62 FR 5009–10, 2/3/97; and paragraph ACF, Office of Research Integrity (ORI), as last amended at 60 FR 56606–06,

dated November 9, 1995, are being amended to make policy changes approved by the Secretary. Specifically, the Notice is to reflect that the Assistant Secretary for Health (ASH) will make proposed findings of research misconduct and administrative actions in response to allegations of research misconduct involving research conducted or supported by components of the Public Health Service (PHS); that direct investigations, previously conducted by ORI, will be conducted by components of the PHS for intramural research and by the Office of Inspector General for extramural research; and that role and structure of ORI will be changed to focus more on preventing misconduct and promoting research integrity through expanded education programs. The changes are as follows:

I. Amend Chapter AC.20 Functions, paragraph A. ''Office of Public Health and Science,'' paragraph titled, ''The Immediate Office (ACA)'' by adding the following new clause:

(1) Proposes findings of research misconduct and administrative actions in response to allegations of research misconduct involving research conducted or supported by the Public Health Service (PHS) OPDIVs, including reversal of an institution's no misconduct finding or opening of a new investigation.

II. Under Section AC.20 Function, delete, paragraph E. ''Office of Research Integrity (ACF)'' in its entirety, and replace with the following:

E. Office of Research Integrity (ACF)—The Director reports to the Secretary and will: (1) Oversee and direct Public Health Service (PHs) research integrity activities on behalf of the Secretary with the exception of the regulatory research integrity activities of the Food and Drug Administration; (2) recommend to the Assistant Secretary for Health for decision, findings of research misconduct and administrative actions in connection with research conducted or supported by the PHS; (3) coordinate the development of research integrity policies designed to ensure that subjects of investigations and whistleblowers are treated fairly, including clear specification of what constitutes misconduct, a fair hearing process, appropriate time limits on pursuing allegations, and specific whistleblower protections; (4) manage the financial resources and provide overall administrative guidance in carrying out the activities; and (5) oversee and direct the research misconduct and integrity activities of the office, including the oversight of research misconduct inquiries and investigations, education and training in the responsible conduct of research, activities designed to promote research integrity and prevent misconduct, and research and evaluation programs.

1. Division of Education and Integrity (ACF2)—The Director and staff: (1) develop and implement, in consultation with the PHS OPDIVs, activities and programs for PHS intramural and extramural research to teach the responsible conduct of research, promote research integrity, prevent research misconduct, and to enable the extramural institutions and PHS OPDIVs to respond effectively to allegations of research misconduct; (2) coordinate the dissemination of research integrity policies, procedures, and regulations; (3) conduct policy analyses, evaluations, and research to improve DHHS research integrity policies and procedures and build the knowledge base in research misconduct, research integrity, and prevention; (4) develop (in consultation with the PHS OPDIVs) policies, procedures, and regulations for review by the Director, Office of Research Integrity, and recommendations to the Secretary; (5) administer programs for: approval of institutional assurances; response to Freedom of Information Act and Privacy Act requests; review and approval of intramural and extramural policies and procedures; and response to allegations of whistleblower retaliation.

2. Division of Investigative Oversight (ACF3)—The Director and staff: (1) review and monitor investigations conducted by applicant and awardee institutions and intramural research programs; (2) evaluate investigations and investigatory findings of awardee and applicant institutions, intramural research programs, and the Office of Inspector General and develop and recommend to the ORI Director, findings of research misconduct and proposal administrative actions against those who committed misconduct; (3) assist the Office of the General Counsel (OGC) in preparing and presenting cases in hearings before the Research Integrity Adjudications Panel of the DHHS Department Appeals Board; (4) provide information on DHHS policies and procedures, as requested, to individuals who have made an allegation or have been accused of research misconduct; and (5) establish and implement a program of advice and technical assistance to entities that conduct inquiries and investigations, or otherwise respond to allegations of research misconduct.

III. Under Chapter AC, Section ACF–30, Delegations of Authority—All delegations and redelegations of authority to the Assistant Secretary for Health and officials of the Office of Research Integrity that were in effect prior to the effective date of this reorganization shall continue in effect pending further redelegation.

Dated: April 14, 2000.

Betsy D'Jamos,

Acting Assistant Secretary for Management and Budget.

[FR Doc. 00–11958 Filed 5–11–00; 8:45 am]

BILLING CODE 4150–04–M

DEPARTMENT OF HOUSING AND URBAN DEVELOPMENT

[Docket No. FR–4562–N–05

Notice of Proposed Information Collection for Public Comment: Assessing the Effectiveness of HUD2020 Management Reforms—Public Knowledge of Fair Housing Issues

AGENCY: Office of the Assistant Secretary for Policy Development and Research, HUD.

ACTION: Notice.

SUMMARY: The proposed information collection requirement described below will be submitted to the Office of Management and Budget (OMB) for review, as required by the Paperwork Reduction Act. The Department is soliciting public comments on the subject proposal.

DATES: July 11, 2000.

ADDRESSES: Interested persons are invited to submit comments regarding this proposal. Comments should refer to the proposal by name and should be sent to: Reports Liaison Officer, Office of Policy Development and Research, Department of Housing and Urban Development, 451 Seventh Street, SW, Room 8226, Washington, DC 20410.

FOR FURTHER INFORMATION CONTACT: Paul B. Dornan, Department of Housing and Urban Development, 451 7th Street, SW, Washington, DC 20410; telephone (202) 708–0574, extension 4486 (this is not a toll-free number). Copies of the proposed data collection instruments and other available documents may be obtained from Mr. Dornan.

SUPPLEMENTARY INFORMATION: The Department will submit the proposed information collection to OMB for review, as required by the Paperwork Reduction Act of 1995 (44 U.S.C. Chapter 35, as amended).

This Notice is soliciting comments from members of the public and affecting agencies concerning the proposed collection of information to: (1) Evaluate whether the proposed

collection of information is necessary for the proper performance of the functions of the agency, including whether the information will have practical utility; (2) Evaluate the accuracy of the agency's estimate of the burden of the proposed collection of information; (3) Enhance the quality, utility, and clarity of the information to be collected; and (4) Minimize the burden of the collection of information on those who are to respond; including through the use of appropriate automated collection techniques or other forms of information technology, *e.g.,* permitting electronic submission of responses.

This Notice also lists the following information:

Title of Proposal: Assessing the Effectiveness of HUD2020 Management Reforms.

Description of the need for the information and proposed use: The Department is conducting under contract an assessment of the impact of the management reforms that the Department has implemented collectively under the name ''HUD2020''. As part of this analysis, the Department proposes to undertake biennial surveys of public knowledge of fair housing issues and law. These surveys will permit the Department to gauge HUD's performance against its goal of ensuring equal opportunity in housing for all Americans and, in particular, the objective of increasing the share of the American population with adequate awareness of fair housing law. The proposed information collection will include the baseline survey and the first follow-on administration of the survey two years thereafter.

Members of affected public: A sample generalizable to and representative of the nation's adult population.

Estimation of the total numbers of hours needed to prepare the information collection including number of respondents, frequency of response, and hours of response: The researchers will administer a baseline survey to 1500 randomly selected members of the American adult population; two years thereafter, the same survey will be administered to another sample of 1500 from the same universe; the surveys are expected to last 7 minutes each, for a total of 175 hours of response each time and, therefore, a total of 350 hours.

Status of the proposed information collection: Pending OMB approval.

Authority: Section 3506 of the Paperwork Reduction Act of 1995, 44 U.S.C. Chapter 35, as amended.

Dated: May 4, 2000.

Lawrence L. Thompson,

Deputy Assistant Secretary for Policy Development.

[FR Doc. 00–11895 Filed 5–11–00; 8:45 am]

BILLING CODE 4210–62–M

DEPARTMENT OF HOUSING AND URBAN DEVELOPMENT

[Docket No. FR–4562–0901]

Notice of Proposed Information Collection for Public Comment: Assessing the Effectiveness of HUD2020 Management Reforms—Fair Housing Opinions

AGENCY: Office of the Assistant Secretary for Policy Development and Research, HUD.

ACTION: Notice.

SUMMARY: The proposed information collection requirement described below will be submitted to the Office of Management and Budget (OMB) for review, as required by the Paperwork Reduction Act. The Department is soliciting public comments on the subject proposal.

DATES: *Comments Due Date:* July 11, 2000.

ADDRESSES: Interested persons are invited to submit comments regarding this proposal. Comments should refer to the proposal by name and should be sent to: Reports Liaison Officer, Office of Policy Development and Research, Department of Housing and Urban Development, 451 Seventh Street, SW., Room 8226, Washington, DC 20410.

FOR FURTHER INFORMATION CONTACT: Paul B. Dornan, Department of Housing and Urban Development, 451 7th Street, SW., Washington, DC 20410; telephone (202) 708–0574, extension 4486 (this is not a toll-free number). Copies of the proposed data collection instruments and other available documents may be obtained from Mr. Dornan.

SUPPLEMENTARY INFORMATION: The Department will submit the proposed information collection to OMB for review, as required by the Paperwork Reduction Act of 1995 (44 U.S.C. Chapter 35, as amended).

This Notice is soliciting comments from members of the public and affecting agencies concerning the proposed collection of information to: (1) Evaluate whether the proposed collection of information is necessary for the proper performance of the functions of the agency, including whether the information will have practical utility; (2) evaluate the accuracy of the agency's estimate of the burden of the proposed collection of information; (3) enhance the quality, utility, and clarity of the information to be collected; and (4) minimize the burden of the collection of information on those who are to respond; including through the use of appropriate automated collection techniques or other forms of information technology, *e.g,* permitting electronic submission of responses.

This Notice also lists the following information:

Title of Proposal: Assessing the Effectiveness of HUD 2020 Management Reforms.

Description of the need for the information and proposed use: The Department is conducting under contract an assessment of the impact of the management reforms that the Department has implemented collectively under the name ''HUD2020''. As part of that assessment, the Department proposes to survey the opinions of the people and organizations HUD works with to implement its programs, in particular, local elected officials, housing agency community development directors, Fair Housing Assistance Program agencies, owners of HUD-assisted multifamily projects and nonprofit organizations concerning the effect of the HUD2020 reforms.

Members of affected public: Members of the following groups selected by random assignment: Local chief elected officials; community development directors; housing authority directors; owners of HUD-assisted multifamily housing projects; representatives of nonprofit organizations; and fair housing assistance program agency directors.

Estimation of the total numbers of hours needed to prepare the information collection including number of respondents, frequency of response, and hours of response: The researchers will survey representatives of the partner groups once for the baseline survey. 4,000 participants will be surveyed in all; the surveys are expected to last 10 minutes. This constitutes a total burden hour estimate of 666⅔ burden hours.

Status of the proposed information collection: Pending OMB approval.

Authority: Section 3506 of the Paperwork Reduction Act of 1995, 44 U.S.C. Chapter 35, as amended.

Dated: May 4, 2000.

Lawrence L. Thompson,

Deputy Assistant Secretary for Policy Development.

[FR Doc. 00–11896 Filed 5–11–00; 8:45 am]

BILLING CODE 4210–62–M

DEPARTMENT OF HOUSING AND URBAN DEVELOPMENT

[Docket No. FR–4557–N–19]

Federal Property Suitable as Facilities To Assist the Homeless

AGENCY: Office of the Assistant Secretary for Community Planning and Development, HUD.

ACTION: Notice.

SUMMARY: This Notice identifies unutilized, underutilized, excess, and surplus Federal property reviewed by HUD for suitability for possible use to assist the homeless.

EFFECTIVE DATE: May 12, 2000.

FOR FURTHER INFORMATION CONTACT: Clifford Taffet, Department of Housing and Urban Development, Room 7262, 451 Seventh Street SW, Washington, DC 20410; telephone (202) 708–1234; TTY number for the hearing- and speech-impaired (202) 708–2565, (these telephone numbers are not toll-free), or call the toll-free Title V information line at 1–800–927–7588.

SUPPLEMENTARY INFORMATION: In accordance with the December 12, 1988 court order in *National Coalition for the Homeless* v. *Veterans Administration,* No. 88–2503–OG (D.D.C.), HUD publishes a Notice, on a weekly basis, identifying unutilized, underutilized, excess and surplus Federal buildings and real property that HUD has reviewed for suitability for use to assist the homeless. Today's Notice is for the purpose of announcing that no additional properties have been determined suitable or unsuitable this week.

Dated: May 4, 2000.

Fred Karnas, Jr.,

Deputy Assistant Secretary for Special Needs Assistance Programs.

[FR Doc. 00–11541 Filed 5–11–00; 8:45 am]

BILLING CODE 4210–29–M

DEPARTMENT OF THE INTERIOR

Fish and Wildlife Service

AGENCY: Fish and Wildlife Service, DOI.

ACTION: Notice of intent to Prepare comprehensive conservation plans, conduct Wilderness/Wild and Scenic River Reviews, and develop compatibility determinations for Cedar Island and Pea Island National Wildlife Refuges in North Carolina.

SUMMARY: This notice advises the public that the Fish and Wildlife Service, Southeast Region, intends to gather information necessary to prepare Comprehensive Conservation Plans for the management of the above stated refuges, while at the same time conduct Wilderness/Wild and Scenic river Reviews, and develop Compatibility Determinations for each refuge. The notice is being furnished in compliance with the Service's Comprehensive Conservation Planning Policy and the National Environmental Policy Act and implementing regulations.

Public Scoping meetings will be held for these refuges as the planning processes are initiated. An announcement of the meeting dates will appear in the **Federal Register**.

DATES: Written comments should be received on or before July 11, 2000.

ADDRESSES: Comments and requests for information concerning these refuges may be addressed to: D.A. Brown, M.S., P.W.S., 1106 West Queen Street, P.O. Box 329, Edenton, North Carolina 27932, (252) 482–2364.

If you wish to comment, you may submit your comments by any one of several methods. You may mail comments to the above address. You may also comment via the Internet to the following address: D_A_Brown@fws.gov. Please submit Internet comments as an ASCII file avoiding the use of special characters and any form of encryption. Please also include your name and return address in your Internet message. If you do not receive a confirmation from the system that we have received your Internet message, contact D.A. Brown directly at the above address. Finally, you may hand-deliver comments to Mr. Brown at 1106 West Queen Street, Edenton, North Carolina. Our practice is to make comments, including names and home addresses of respondents, available for public review during regular business hours. Individual respondents may request that we withhold their home address from the rulemaking record, which we will honor to the extent allowable by law. There also may be circumstances in which we would withhold from the rulemaking record a respondents identity, as allowable by law. If you wish us to withhold your name and/or address, you must state this prominently at the beginning of your comment. However, we will not consider anonymous comments. We will make all submissions from organizations or businesses, and from individuals identifying themselves as representatives or officials of organizations or businesses, available for public inspection in their entirety.

SUPPLEMENTARY INFORMATION: It is the policy of the Fish and Wildlife Service to have all lands within the National Wildlife Refuge System managed in accordance with an approved Comprehensive Conservation Plan. The plan guides management decisions and identifies the goals, objectives, and strategies for achieving refuge purposes. Public input into this planning process is encouraged. The plan will provide other agencies and the public with a clear understanding of the desired conditions of the refuge and how the Service will implement the management strategies. Some of the issues to be addressed in these plans include the following:

(a) Public use management;

(b) Habitat management;

(c) Wildlife population management; and

(d) Cultural resource identification and protection.

Alternatives that address the issues and management strategies associated with these topics will be included in the environmental documents.

Pre-planning for both Cedar Island and Pea Island National Wildlife Refuges began in January 2000. Pea Island National Wildlife Refuge was established by Presidential Executive Order 7864 in April 1938, as a refuge and breeding ground for migratory birds and other wildlife; and Cedar Island National Wildlife Refuge was authorized by the Migratory Bird Conservation Act in August 1964, for use as an inviolate sanctuary, or for other management purposes, for migratory birds.

Dated: May 5, 2000.

Judy L. Jones,

Acting Regional Director.

[FR Doc. 00–11940 Filed 5–11–00; 8:45 am]

BILLING CODE 4310–55–M

DEPARTMENT OF THE INTERIOR

Fish and Wildlife Service

AGENCY: Fish and Wildlife Service, DOI.

ACTION: Notice of intent to conduct public meetings to obtain suggestions and information on the scope of issues to include in the preparation of Comprehensive Conservation Plans for Pelican Island National Wildlife Refugee, Indian River County, Florida, and Archie Carr National Wildlife Refuge, Brevard and Indian River Counties, Florida.

SUMMARY: This notice advises the public that the U.S. Fish and Wildlife Service intends to gather information necessary to prepare comprehensive conservation plans and associated environmental documents pursuant to the National Environmental Policy Act and implementing regulations.

The Service will hold meetings as follows:

Thursday, May 25, 2000, 6:30–9 p.m., Environmental Learning Center, Wabasso Island, 255 Live Oak Drive, Vero Beach, Florida.

Thursday, June 1, 2000, 6:30–9 p.m., Chapel by the Sea South A1A, Melbourne Beach, Florida.

DATES: Written comments should be received by June 30, 2000.

ADDRESSES: Address comments and requests for more information to:

Natural Resource Planner, Merritt Island National Wildlife Refuge Complex, P.O. Box 6504, Titusville, Florida 32782–6504, (321) 861–0667.

If you wish to comment, you may submit your comments by any one of several methods. You may mail comments to the above address. You may also comment via the Internet to the following address: Cheri__Ehrhardt@fws.gov. Please submit Internet comments as an ASCII file avoiding the use of special characters and any form of encryption. Please also include your name and return address in your Internet message. If you do not receive a confirmation from the system that we have received your Internet message, contact us directly at Merritt Island National Wildlife Refuge Complex at the above address. Finally, you may hand-deliver comments to the Refuge Complex at the above address. Our practice is to make comments, including names and home addresses of respondents, available for public review during regular business hours. Individual respondents may request that we withhold their home address from the rulemaking record, which we will honor to the extent allowable by law. There also may be circumstances in which we would withhold from the rulemaking record a respondent's identity, as allowable by law. If you wish us to withhold your name and/or address, you must state this prominently at the beginning of your comment. However, we will not consider anonymous comments. We will make all submissions from organizations or businesses, and from individuals identifying themselves as representatives or officials of organizations or businesses, available for public inspection in their entirety.

SUPPLEMENTARY INFORMATION: It is the policy of the Fish and Wildlife Service to manage all lands within the National Wildlife Refugee System in accordance with an approved comprehensive conservation plan. These plans outline a vision for each refuge; guide management decisions; and outline goals, objectives and strategies to achieve the visions and purposes of each refugee unit. The plans will provide other agencies and the public with an understanding of the management strategies to be implemented.

The Service has initiated planning for Pelican Island National Wildlife Refuge for the conservation and enhancement of its natural resources. Encompassing approximately 5,000 acres and including designations as a National Historic Landmark, a National Wilderness Area, and a Wetland of International Importance, this refuge is located between the Indian River and the Atlantic Ocean in southeastern Florida, near the city of Sebastian.

Planning for Archie Carr National Wildlife Refugee has been initiated for the conservation and enhancement of its natural resources as well. This refugee is located along the Atlantic Ocean in southeastern Florida, between the cities of Melbourne Beach and Vero Beach. While the Service owns or leases approximately 165 acres, the State of Florida, Brevard County, and Indian River County account for the remainder of the publicly owned lands within the refuge. The refuge beaches support loggerhead and green turtle nesting. The Florida scrub jay, Eastern indigo snake, Southeastern beach mouse, and other threatened and endangered species also occur within the refuge.

Dated: May 5, 2000.

Judy L. Jones,

Acting Regional Director.

[FR Doc. 00–11939 Filed 5–11–00; 8:45 am]

BILLING CODE 4310–55–M

DEPARTMENT OF THE INTERIOR

Fish and Wildlife Service

Endangered and Threatened Species Permit Application

AGENCY: Fish and Wildlife Service, Interior.

ACTION: Notice of receipt of application.

The following applicant has applied for a permit to conduct certain activities with endangered species. This notice is provided pursuant to section 10(c) of the Endangered Species Act of 1973, as amended (16 U.S.C. 1531, *et seq.*).

Permit Number TE 026515

Applicant: Glen R. Gill, Central Michigan University, Mt. Pleasant, Michigan.

The applicant requests a permit to take (harass) the Karner Blue Butterfly (Lycaeides melissa samuelis) in southwestern Michigan within the Huron-Manistee National Forest. Activities are for in situ measurements of larvae to determine cohort survival rates to pupation. Results will aid in the enhancement of survival of the species in the wild.

Written data or comments should be submitted to the Regional Director, U.S. Fish and Wildlife Service, Ecological Services Operations, 1 Federal Drive, Fort Snelling, Minnesota 55111–4056, and must be received within 30 days of the date of this publication.

Documents and other information submitted with this application are available for review by any party who submits a written request for a copy of such documents to the following office within 30 days of the date of publication of this notice: U.S. Fish and Wildlife Service, Ecological Services Operations, 1 Federal Drive, Fort Snelling, Minnesota 55111–4056. Telephone: (612/713–5343); FAX: (612/713–5292).

Dated: May 4, 2000.

Charles M. Wooley,

Assistant Regional Director, Ecological Services, Region 3, Fort Snelling, Minnesota.

[FR Doc. 00–11938 Filed 5–11–00; 8:45 am]

BILLING CODE 4310–55–P

DEPARTMENT OF THE INTERIOR

Fish and Wildlife Service

Notice of Availability of a Draft Recovery Plan for the California Red-legged Frog for Review and Comment

AGENCY: U.S. Fish and Wildlife Service, Interior.

ACTION: Notice of document availability.

SUMMARY: The U.S. Fish and Wildlife Service (Service) announces the availability of a draft recovery plan for the California red-legged frog for public review. This recovery plan includes the threatened California red-legged frog (*Rana aurora draytonii*). This subspecies of red-legged frog has been extirpated from 70 percent of its former range and is now found in coastal drainages of central California from Marin County, California, south to northern Baja California, Mexico. The Service solicits review and comment from local, State, and Federal agencies, and the public on this draft recovery plan.

DATES: Comments on the draft recovery plan must be received on or before August 10, 2000 to receive consideration by the Service.

ADDRESSES: The draft recovery plan is available for public inspection by appointment during normal business hours at the Service's Sacramento Fish

and Wildlife Office, 2800 Cottage Way, W–2605, Sacramento, California. Persons wishing to review the draft recovery plan may obtain a copy by contacting the Field Supervisor (attention Wayne S. White) at the above address or by calling (916) 414–6600. Comments and materials should be submitted to the above address, and are available on request for public inspection by appointment at the Sacramento Fish and Wildlife Office.

FOR FURTHER INFORMATION CONTACT: Diane Elam, Fish and Wildlife Biologist, at the above Sacramento address.

SUPPLEMENTARY INFORMATION:

Background

Restoring endangered or threatened animals and plants to the point where they are again secure, self-sustaining members of their ecosystems is a primary goal of the Service's endangered species program. To help guide the recovery effort, the Service is working to prepare recovery plans for most of the listed species native to the United States. Recovery plans describe actions considered necessary for the conservation of the species, establish criteria for downlisting or delisting listed species, and estimate time and cost for implementing the recovery measures needed.

The Endangered Species Act of 1973, as amended (Act) (16 U.S.C. 1531 *et seq.*), requires the development of recovery plans for listed species unless such a plan would not promote the conservation of a particular species. Section 4(f) of the Act as amended in 1988 requires that public notice and an opportunity for public review and comment be provided during recovery plan development. The Service will consider all information presented during the public comment period prior to approval of each new or revised recovery plan. Substantive technical comments will result in changes to the plan. Substantive comments regarding recovery plan implementation may not necessarily result in changes to the recovery plan, but will be forwarded to appropriate Federal or other entities so that they can take these comments into account during the course of implementing recovery actions. Individual responses to comments will not be provided.

The California red-legged frog (*Rana aurora draytonii*) occurs from sea level to elevations of about 1,500 meters (5,000 feet) in its range. It has been extirpated from 70 percent of its former range. The California red-legged frog requires a variety of habitat elements with aquatic breeding areas embedded within a matrix of riparian and upland dispersal habitats. Breeding sites of the California red-legged frog are in aquatic habitats including pools and backwaters within streams and creeks, ponds, marshes, sag ponds, dune ponds, and lagoons. California red-legged frogs frequently breed in artificial impoundments such as stock ponds. Potential threats to the species include elimination or degradation of habitat from land development and land use activities, and habitat invasions by non-native aquatic species.

The objective of this recovery plan is to delist the California red-legged frog through implementation of a variety of recovery measures including (1) Protection of known populations and reestablishment of populations; (2) protection of suitable habitat, corridors, and core areas; (3) habitat management; (4) development of land use guidelines; (5) research; (6) surveying and monitoring; and (7) public participation, outreach, and education.

Public Comments Solicited

The Service solicits written comments on the draft recovery plan described. All comments received by the date specified above will be considered prior to approval of this plan.

Authority

The authority for this action is section 4(f) of the Endangered Species Act, 16 U.S.C. 1533(f).

Elizabeth H. Stevens,

Acting Manager, California/Nevada Operations Office, Region 1, U.S. Fish and Wildlife Service.

[FR Doc. 00–11947 Filed 5–11–00; 8:45 am]

BILLING CODE 4310–55–P

DEPARTMENT OF THE INTERIOR

Bureau of Indian Affairs

Final Programmatic Environmental Impact Statement for the Proposed Navajo Ten-Year Forest Management Plan, Navajo Nation, Arizona/New Mexico

AGENCY: Bureau of Indian Affairs, Interior.

ACTION: Correction to Notice.

SUMMARY: This notice corrects the closing date for the public comment period published in the **Federal Register** on April 14, 2000 (65 FR 20197), for the Final Programmatic Environmental Impact Statement for the Proposed Navajo Ten-Year Forest Management Plan, Navajo Nation, Arizona/New Mexico. The closing date is changed from June 15, 2000 to May 15, 2000. All other information published in the April 14, 2000 notice remains unchanged.

DATES: The correct date by which written comments must arrive is May 15, 2000.

FOR FURTHER INFORMATION CONTACT: Harold D. Russell, 520–729–7228.

Dated: May 8, 2000.

Kevin Gover,

Assistant Secretary—Indian Affairs.

[FR Doc. 00–12087 Filed 5–11–00; 8:45 am]

BILLING CODE 4310–02–P

DEPARTMENT OF THE INTERIOR

Bureau of Indian Affairs

Indian Gaming

AGENCY: Bureau of Indian Affairs, Interior.

ACTION: Notice of amendment to approved Tribal-State Compact.

SUMMARY: Pursuant to Section 11 of the Indian Gaming Regulatory Act (IGRA), (Pub. L. 100–497), 25 U.S.C. 2710, the Secretary of the Interior shall publish, in the **Federal Register**, notice of approved Tribal-State Compacts for the purpose of engaging in Class III gaming activities on Indian lands. The Assistant Secretary—Indian Affairs, Department of the Interior, through his delegated authority, has approved the Amendment to the Tribal State Off-Track Wagering Compact between the Choctaw Nation of Oklahoma and the State of Oklahoma, which was executed on April 6, 2000.

DATES: This action is effective May 12, 2000.

FOR FURTHER INFORMATION CONTACT: George T. Skibine, Director, Indian Gaming Management Staff, Bureau of Indian Affairs, Washington, D.C. 20240, (202) 219–4066.

Dated: May 3, 2000.

Kevin Gover,

Assistant Secretary—Indian Affairs.

[FR Doc. 00–11942 Filed 5–11–00; 8:45 am]

BILLING CODE 4310–02–P

DEPARTMENT OF THE INTERIOR

Bureau of Indian Affairs

Indian Gaming

AGENCY: Bureau of Indian Affairs, Interior.

ACTION: Notice of amendment to approved Tribal-State Compact.

SUMMARY: Pursuant to Section 11 of the Indian Gaming Regulatory Act (IGRA),

Pub. L. 100–497, 25 U.S.C. 2710, the Secretary of the Interior shall publish, in the **Federal Register**, notice of approved Tribal-State Compacts for the purpose of engaging in Class III gaming on Indian lands. The Assistant Secretary—Indian Affairs, Department of the Interior, through his delegated authority, has approved the Amendment to the Interim Agreement with the State of Montana and the Confederated Salish and Kootenai Tribes, which was executed on March 21, 2000.

DATES: This action is effective May 12, 2000.

FOR FURTHER INFORMATION CONTACT: George T. Skibine, Director, Office of Indian Gaming Management, Bureau of Indian Affairs, Washington, DC 20240. (202) 219–4066.

Dated: May 3, 2000.

Kevin Gover,

Assistant Secretary—Indian Affairs.

[FR Doc. 00–11943 Filed 5–11–00; 8:45 am]

BILLING CODE 4310–02–P

DEPARTMENT OF THE INTERIOR

Bureau of Indian Affairs

Indian Gaming

AGENCY: Bureau of Indian Affairs, Interior.

ACTION: Notice of approval of amendment to Tribal-State Compact.

SUMMARY: Pursuant to Section 11 of the Indian Gaming Regulatory Act of 1988 (IGRA), Pub. L. 100–497, 25 U.S.C. § 2710, the Secretary of the Interior shall publish, in the **Federal Register**, notice of approved Tribal-State Compacts for the purpose of engaging in Class III gaming activities on Indian lands. The Assistant Secretary—Indian Affairs, Department of the Interior, through his delegated authority, has approved an Amendment, executed on May 2, 2000, to the Gaming Compact between the Tunica-Biloxi Indian Tribe of Louisiana and the State of Louisiana.

DATES: This action is effective May 12, 2000.

FOR FURTHER INFORMATION CONTACT: George T. Skibine, Director, Office of Indian Gaming Management, Bureau of Indian Affairs, Washington, DC 20240, (202) 219–4066.

Dated: May 3, 2000.

Kevin Gover,

Assistant Secretary—Indian Affairs.

[FR Doc. 00–11941 Filed 5–11–00; 8:45 am]

BILLING CODE 4310–02–P

DEPARTMENT OF THE INTERIOR

Bureau of Land Management

[CA–160–1220–00]

Extension of Nomination Period for Central California Resource Advisory Council

AGENCY: Bureau of Land Management, Interior.

ACTION: Notice of Resource Advisory Council Call for Nominations.

SUMMARY: The purpose of this notice is to extend the deadline for receiving nominations for membership on the Bureau of Land Management (BLM) Central California Resource Advisory Councils (RAC). The RAC provides advice and recommendations to BLM on land use planning and management of the public lands. Public nominations will be considered until May 21, 2000. The Federal Land Policy and Management Act (FLPMA) directs the Secretary of the Interior to involve the public in planning and issues related to management of lands administered by BLM. Section 309 of FLPMA directs the Secretary to select citizen-based advisory councils that are established and authorized consistent with the requirements of the Federal Advisory Committee Act (FACA). As required by the FACA, members appointed to the RAC must be balanced and representative of the various interests concerned with the management of the public lands. These include three categories:

Category One—Holders of federal grazing permits and representatives of energy and mineral development, timber industry, transportation or rights-of-way, off-highway vehicle use, and commercial recreation;

Category Two—Representatives of nationally or regionally recognized environmental organizations, archaeological and historic interests, dispersed recreation, and wild horse and burro groups;

Category Three—Holders of State, county or local elected office, employees of a State agency responsible for management of natural resources, academicians involved in natural sciences, representatives of Indian tribes, and the public-at-large.

Individuals may nominate themselves or others. Nominees must be residents of the State of California. Nominees will be evaluated based on their education, training, and experience and their knowledge of the geographical area of the RAC. Nominees should have demonstrated a commitment to collaborative resource decision making. All nominations must be accompanied by letters of reference from represented interests or organizations, a completed background information nomination form, as well as any other information that speaks to the nominee's qualifications.

There are four vacancies on the Central California RAC; one in Category One, one in Category Two, and two in Category Three. Nominations should be sent to: Larry Mercer, Bakersfield Field Office, BLM, 3801 Pegasus Avenue, Bakersfield, CA 93308, telephone: 661–391–6000.

Dated: May 2, 2000.

Ron Fellows,

Field Manager.

[FR Doc. 00–11966 Filed 5–11–00; 8:45 am]

BILLING CODE 4310–40–M

DEPARTMENT OF THE INTERIOR

Bureau of Land Management

[OR–958–6333–ET; GPO–0159; OR–52939]

Public Land Order No. 7445; Withdrawal of Public Lands for the Row River Trail; Oregon

AGENCY: Bureau of Land Management, Interior.

ACTION: Public land order.

SUMMARY: This order withdraws 189.31 acres of public lands from surface entry and mining for a period of 20 years for the Bureau of Land Management to protect the Row River Trail. An additional 11.41 acres of non-Federal lands, if acquired by the United States, would also be withdrawn by this order. The public lands have been and will remain open to mineral leasing.

EFFECTIVE DATE: May 12, 2000.

FOR FURTHER INFORMATION CONTACT: Charles R. Roy, BLM Oregon/Washington State Office, P.O. Box 2965, Portland, Oregon 97208–2965; 503–952–6189.

By virtue of the authority vested in the Secretary of the Interior by Section 204 of the Federal Land Policy and Management Act of 1976, 43 U.S.C. 1714 (1994), it is ordered as follows:

1. Subject to valid existing rights, the following described public lands are hereby withdrawn from settlement, sale, location, or entry under the general land laws, including the United States mining laws (30 U.S.C. Ch. 2 (1994)), but not from leasing under the mineral leasing laws, to protect the Bureau of Land Management's Row River Trail:

Willamette Meridian

T. 21 S., R. 1 W.,

Sec. 31, lot 2 of Tract No. 38.

And portions of the lands as more particularly described in the Lane County Oregon Deed Records as the Donation Deed, Reception No. 9462054 dated August 25, 1994, and recorded on August 25, 1994, Reel 1986R; the Donation Deed, Reception No. 9858998 dated March 18, 1998, and recorded on July 27, 1998, Reel 2446R; the Correction Donation Deed, Reception No. 99019928 dated February 4, 1999, and recorded on March 4, 1999, Reel 2523R; and the Donation Deed, Reception No. 99020855 dated January 26, 1999, and recorded on March 8, 1999, Reel 2524R, which lands traverse the following:

Willamette Meridian

T. 21 S., R. 1 W.
T. 22 S., R. 1 W.
T. 20 S., R. 2 W.
T. 20 S., R. 3 W.
T. 21 S., R. 3 W.

The areas described aggregate approximately 189.31 acres in Lane County.

2. Portions of the following described non-Federal lands, if acquired by the United States, will be subject to the terms and conditions of this withdrawal as described in paragraph 1:

Willamette Meridian

T. 21 S., R. 1 W.,
Sec. 19, lot 1;
Sec. 31, lot 1 of Tract 38, and SE¼NE¼;
Sec. 32, W½NW¼.

The areas described aggregate approximately 11.41 acres in Lane County.

3. The withdrawal made by this order does not alter the applicability of those public land laws governing the use of the lands under lease, license, or permit, or governing the disposal of their mineral or vegetative resources other than under the mining laws.

4. This withdrawal will expire 20 years from the effective date of this order unless, as a result of a review conducted before the expiration date pursuant to section 204(f) of the Federal Land Policy and Management Act of 1976, 43 U.S.C. 1714(f) (1994), the Secretary determines that the withdrawal shall be extended.

Dated: May 4, 2000.

Sylvia V. Baca,

Assistant Secretary of the Interior.

[FR Doc. 00–11995 Filed 5–11–00; 8:45 am]

BILLING CODE 4310–33–P

DEPARTMENT OF THE INTERIOR

Bureau of Land Management

[ES–960–9820–BJ–ES03] ES–50670, Group 199, Florida

Notice of Filing of Plat of Survey; Florida

The plat of the dependent resurvey of a portion of the south boundary of the Moses E. Levy Grant, a portion of the south and north boundaries, the east boundary, a portion of the subdivisional lines and the corrective dependent resurvey of a portion of the subdivisional lines, Township 17 South, Range 27 East, Tallahassee Meridian, Florida, will be officially filed in Eastern States, Springfield, Virginia at 7:30 a.m., on June 12, 2000.

The survey was requested by the U.S. Forest Service.

All inquiries or protests concerning the technical aspects of the survey must be sent to the Chief Cadastral Surveyor, Eastern States, Bureau of Land Management, 7450 Boston Boulevard, Springfield, Virginia 22153, prior to 7:30 a.m., June 12, 2000.

Copies of the plat will be made available upon request and prepayment of the appropriate fee.

Dated: April 27, 2000.

Stephen G. Kopach,

Chief Cadastral Surveyor.

[FR Doc. 00–11965 Filed 5–11–00; 8:45 am]

BILLING CODE 4310–GJ–P

DEPARTMENT OF THE INTERIOR

Bureau of Land Management

[NM–952–00–1420–BJ]

Notice of Filing of Plats of Survey; New Mexico

AGENCY: Bureau of Land Management, Interior.

ACTION: Notice.

SUMMARY: The plats of survey described below are scheduled to be officially filed in the New Mexico State Office, Bureau of Land Management, Santa Fe, New Mexico, (30) thirty calendar days from the date of this publication.

New Mexico Principal Meridian, New Mexico:

T. 29 N., R. 15 W., approved April 20, 2000, for Group 955 NM;
T. 29 N., R. 14 W., approved April 25, 2000, for Group 955 NM;
T. 29 N., R. 16 W., approved May 1, 2000, for Group 955 NM;
T. 14 S., R. 10 E., approved April 27, 2000, for Group 962 NM;
T. 21 N., R. 6 E., approved April 27, 2000, for Group 73 OK;

Amended Protraction Diagrams for Tps. 7–12 S., R. 21 W., approved May 4, 2000;

If a protest against a survey, as shown on any of the above plats is received prior to the date of official filing, the filing will be stayed pending consideration of the protest. A plat will not be officially filed until the day after all protests have been dismissed and become final or appeals from the dismissal affirmed.

A person or party who wishes to protest against any of these surveys must file a written protest with the NM State Director, Bureau of Land Management, stating that they wish to protest.

A statement of reasons for a protest may be filed with the notice of protest to the State Director, or the statement of reasons must be filed with the State Director within thirty (30) days after the protest is filed. The above-listed plats represent dependent resurveys, surveys, and subdivisions.

These plats will be available for inspection in the New Mexico State Office, Bureau of Land Management, P.O. Box 27115, Santa Fe, New Mexico 87502–0115. Copies may be obtained from this office upon payment of $1.10 per sheet.

Dated: May 4, 2000.

James D. Claflin.

Acting Chief Cadastral Surveyor for New Mexico.

[FR Doc. 00–11916 Filed 5–11–00; 8:45 am]

BILLING CODE 4310–FB–M

DEPARTMENT OF THE INTERIOR

National Park Service

Draft Legislative Environmental Impact Statement Timbisha Shoshone Homeland Death Valley National Park; Notice of Availability

SUMMARY: Pursuant to § 102(2)c of the National Environmental Policy Act of 1969 (Public Law 91–190, as amended), and the Council on Environmental Quality regulations (40 CFR Part 1500–1508), at the request of the Department of the Interior, the National Park Service, in cooperation with the Bureau of Land Management, Fish and Wildlife Service, and the Bureau of Reclamation has prepared a Draft Legislative Environmental Impact Statement (LEIS) identifying and evaluating two alternatives for a Timbisha Shoshone Homeland within and around Death Valley National Park, California. Potential impacts and appropriate mitigation strategies are identified and

assessed for each alternative. Establishing the proposed Homeland would entail specific legislation. If approved, the plan will guide management actions in the transfer of lands and the development of cooperative agreements.

PROPOSAL: The proposed Timbisha Shoshone Homeland (Alternative A-Preferred) would transfer approximately 7,500 acres of federal lands (currently managed by Death Valley National Park and the Bureau of Land Management in California and Nevada) into trust with the Department of the Interior for the creation of a tribal homeland. Permission would be sought for acquisition of two parcels of approximately 120 acres of former Indian allotted lands in Saline Valley, California, and approximately 2,430 acres near Lida, Nevada, from private owners, as willing sellers.

Alternatives

Alternative B maintains the status quo, as described in Chapter 3, Description of Environment and Affected Resources. It provides a baseline from which to compare and evaluate the magnitude of proposed changes, and to measure the foreseeable environmental effects of those changes. This no-action concept follows the guidance of the Council on Environmental Quality, which describes the no-action alternative as no change from the current management direction or level of management intensity.

Planning Background

The draft Timbisha Shoshone Homeland LEIS was prepared pursuant to the National Environmental Policy Act. Although scoping is not required for the preparation of a LEIS, an understanding of public concerns was desired. Accordingly, a notice of availability was published in the National Register on April 19, 1999 announcing to the public the opportunity of commenting on the Draft Secretarial Report. The release of the report assisted the agencies in gathering public input, which aided in the analysis subsequently undertaken in preparing the LEIS. In addition, six public meetings were conducted and five informational meetings were held at the request of state congressional delegations and county commissioners and supervisors. Over 550 letters were received during the public review period providing details on a wide spectrum of regulatory, socioeconomic, and environmental issues. A Scoping Summary document was prepared to identify issues directly related to resource management and the regulatory process to be addressed in the LEIS. In October 1999, a copy of the 11-page Scoping Summary Document was mailed to everyone who attended the public meetings or commented during the process.

Public Meetings

At this time, it is anticipated that four public meetings will be held during June, 2000. Confirmed dates, times, and locations will be posted on the internet (see below), and published in local and regional newspapers several weeks in advance. Participants are encouraged to review the document prior to attending a meeting. Representatives from the Department of Interior, Timbisha Shoshone Tribe, Death Valley National Park, and the Bureau of Land Management will attend all sessions to present the draft Timbisha Shoshone Homeland LEIS, to receive oral and written comments, and to answer questions.

Comments

The draft Timbisha Shoshone Homeland LEIS will be sent directly to the project mailing list. Copies will be available at park headquarter at Furnace Creek, field offices of BLM Ridgecrest, California and Tonopah, Nevada, and at local and regional libraries. Also, volume 1 of the LEIS will be posted on the internet at http://www3.iwvisp.com/blm/report. Written comments must be postmarked or transmitted by e-mail not later than 60-days after EPA publishes its ''Friday listing'' of the filing of the LEIS (anticipated deadline being approximately July 22, 2000) and should be addressed to the Superintendent, Death Valley National Park, P.O. Box 579, Death Valley, California 92328.

All comments received will be available for public review in the parks library. If individuals submitting comments request that their name or/and address be withheld from public disclosure, it will be honored to the extent allowable by law. Such requests must be stated prominently in the beginning of the comments. There may also be circumstances wherein the NPS will withhold a respondent's identity as allowable by law. As always: NPS will make available to public inspection all submissions from organizations or businesses and from persons identifying themselves as representatives or officials of organizations and businesses, and anonymous comments may not be considered.

Decision Process

Depending upon the degree of public interest and response from other agencies and organizations, at this time it is anticipated that the Final Timbisha Shoshone Homeland LEIS will be completed during the late summer-early fall of 2000. Availability of the document will be duly noticed in the **Federal Register**. Subsequently, notice of an approved Record of Decision would be published in the **Federal Register** not sooner than thirty (30) days after the final document is distributed. This is expected to occur by late fall 2000.

The Department officials responsible for approval are: the Assistant Secretary for Fish, Wildlife and Parks; the Assistant Secretary for Land and Minerals Management; and the Assistant Secretary for Indian Affairs. It is anticipated that the proposal would be submitted by the Secretary of the Interior to Congress for consideration. If enacted, the National Park Service officials responsible for implementation would be the Superintendent, Death Valley National Park and the Regional Director, Pacific West Region; as well as the State Directors, Bureau of Land Management, Nevada and California; the Assistant Secretary for Indian Affairs; and the Bureau of Indian Affairs, Central California Agency.

Dated: May 5, 2000.

John J. Reynolds,

Regional Director, Pacific West Region.

[FR Doc. 00–11954 Filed 5–11–00; 8:45 am]

BILLING CODE 4310–70–P

DEPARTMENT OF THE INTERIOR

National Park Service

Adoption of Proposed Leasing Regulations/Guidelines for the El Portal Administrative Site, Yosemite National Park, Mariposa County, California; Notice of Extended Public Comment

SUMMARY: The National Park Service is responsible for management and administration of the El Portal Administrative Site. To facilitate such activities the Superintendent of Yosemite National Park, acting on behalf of the Secretary of the Interior, has been authorized to issue leases for Administrative Site lands, subject to terms, conditions, and guidelines appropriate for proper administration, protection, and development of the site. The proposed lease guidelines set forth eligibility qualifications for those seeking to acquire a lease, process to be

used to establish lease fees, and circumstances under which the Superintendent may acquire unexpired leases.

Reference

Public Law 85–922 of September 2, 1958, Public Law 90–409 of July 21, 1968 and Public Law 99–542 of October 27, 1986, as codified in Title 16 United States Code Sections 47–1 through 47–6.

Comments

The original comment period ended April 25, 2000. The extended comment period shall end June 30, 2000. Requests for a copy of the proposed leasing program, or written comments, should be addressed to: Superintendent, Yosemite National Park, c/o Office of Special Park Uses, P.O. Box 700, El Portal, California, 95318. If individuals submitting comments request that their name or/and address be withheld from public disclosure, it will be honored to the extent allowable by law. Such requests must be stated prominently at the beginning of the comments. There also may be circumstances wherein the NPS will withhold a respondent's identity as allowable by law. As always: NPS will make available to public inspection all submissions from organizations or businesses and from persons identifying themselves as representatives or officials of organizations and businesses; and, anonymous comments may not be considered.

Dated: May 3, 2000.

Cynthina Ip,

Acting Regional Director, Pacific West Region.

[FR Doc. 00–11953 Filed 5–11–00; 8:45 am]

BILLING CODE 4310–70–P

DEPARTMENT OF JUSTICE

Notice of Lodging of Consent Decree, Under the Comprehensive, Environmental Response, Compensation and Liability Act (''CERCLA'')

In accordance with Departmental policy, 28 CFR 50.7, notice is hereby given that on April 28, 2000 a proposed Amendment Consent Decree in Civil Action No. 99–2673–Civ–T–24B was lodged with the United States District Court for the Middle District of Florida.

In this action the United States sought injunctive relief and recovery of response costs under Sections 106(a) and 107 of CERCLA, 42 U.S.C. 9606(a) and 9607, with respect to the Stauffer Chemical Superfund Site in Tarpon Springs, Florida (''the Site'').

Under the proposed Amended Consent Decree, Atkemix Thirty-Seven, Inc., the present owner and operator of the Site, and Aventis CropScience USA, Inc., formerly Rhone-Poulenc Ag Company, Inc., the former owner and operator of the Site, have agreed to perform the remedy chosen by EPA to clean up the Site, pay the government's remaining past response costs, and pay future response costs, in settlement of the government's claims under Sections 106 and 107 of CERCLA, 42 U.S.C. 9606 and 9607.

The Department of Justice will receive, for a period of thirty (30) days from the date of this publication, comments relating to the proposed consent decree. Comments should be addressed to the Assistant Attorney General for the Environment and Natural Resources Division, Department of Justice, Washington, D.C. 20044–7611, and should refer to *Untied States* v. *Atkemix Thirty-Seven, Inc., and Rhone-Poulenc Ag. Company, Inc.,* (M.D. FI.) DOJ# 90–11–2–1227/1.

The proposed consent decree may be examined at the Office of the United States Attorney, 400 North Tampa Street, Suite 3200, Tampa, Florida 33602, the Region 4 Office of the Environmental Protection Agency, 61 Forsythe Street, Atlanta, Georgia 30303, and at the Consent Decree Libra, Post Office Box 7611, Washington, DC 20044–7611. A copy of the proposed consent decree may be obtained by mail from the Consent Decree Library, Post Office Box 7611, Washington, DC 20044–7611. In requesting a copy please refer to the referenced case and enclose a check and enclose a check in the amount of 25 cents per page for reproduction costs, payable to the Consent Decree Library.

Joel M. Gross,

Chief, Environmental Enforcement Section, Environment and Natural Resources Division.

[FR Doc. 00–12036 Filed 5–11–00; 8:45 am]

BILLING CODE 4410–15–M

DEPARTMENT OF JUSTICE

Antitrust Division

Notice Pursuant to The National Cooperative Research and Production Act of 1993—Application Service Provider Industry Consortium, Inc.

Notice is hereby given that, on October 21, 1999, pursuant to section 6(a) of the National Cooperative Research and Production Act of 1993, 15 U.S.C. 4301 *et seq.* (''the Act''), Application Service Provider Industry Consortium, Inc. has filed written notifications simultaneously with the Attorney General and the Federal Trade Commission disclosing changes in its membership status. The notifications were filed for the purpose of extending the Act's provisions limiting the recovery of antitrust plaintiffs to actual damages under specified circumstances. Specifically, Xevo, Sudbury, MA; New Millenium Games, Inc., Reno, NV; Applicant, Inc., Seattle, WA; Cable & Wireless, Vienna, VA; Mi8 Corporation, New York, NY; Panoptic Technology Services, Inc., Cambridge, MA; Northpoint Communications, Inc., San Francisco, CA; 3Com Corporation, Santa Clara, CA; MultiEmedia.com, Caulfield North Victoria, Australia; StorageNetworks, Inc., Waltham, Ma; Clarus Corporation, Suwanee, GA; Envive Corporation, Mountain View, CA; SalesLogix Corporation, Scottsdale, AZ; HotOffice Technologies, Inc., Boca Raton, FL; Geneer, Des Plaines, IL; Pilot Network Services, Inc., Alameda, CA; Logix Communications Corp., Oklahoma City, OK; Telcordia Technologies, Piscataway, NJ; Centillion Data Systems, Inc., Indianapolis, IN; IntraLinks, New York, NY; Enterprise Networking Systems, Inc., Redwood City, CA; Workscape, Inc., Natick, MA; Aegis Consulting, LLC, Bethesda, MD; Allaire Corporation, Cambridge, MA; COBRA Computing By Remote Access, Amsterdam, The Netherlands; ITNET, Birmingham, United Kingdom; Thin Client Organization, LLC, Woodinville, WA; Argus Systems Group, Inc., Savoy, IL; Jato Communications, Denver, CO; Sound Computer Services, Altoona, PA; Prefersoft Solutions, Inc., Scotts Valley, CA; Pivotal Corporation, Kirkland, WA; Organicnet, Inc., San Francisco, CA; United Messaging Inc., Malvern, PA; Ten North Software, San Francisco, CA; @ccelerate Software, Inc., San Jose, CA; NexBase, Inc., Sunnyvale, CA; SAGA SOFTWARE, Inc., Reston, VA; INTEGRATION Ltd., Middlesex, United Kingdom; Princeton Financial Systems, Princeton; NJ; Concentric Network, San Jose, CA; TeleVideo, Inc., San Jose CA; LightPC.com, New York, NY; OPTIKA Technologies, Kuala Lumpur, Malaysia, CyberTech Systems, Inc., Trevose, PA; QSP Inc., Raleigh, NC; Infointeractive Inc., Bedford, Nova Scotia, Canada, Evalis AG, Koln, Germany; Legato Systems, Inc., Palo Alto, CA; Neteos, Inc., Burlington, MA; Captura Software, Inc., Bothell, WA; NIS Compulink Groupe Bull, Le Pecq-France; Localog, Paris, FRANCE; @tlas e-Solutions, Inc.; San Francisco, CA; Equant, Shalford, Guildford Surrey, United Kingdom; Syntacom IT-Services Inc., Waltham, MA; Choice Logis Corporation,

Millburn, NJ; Hitachi Data Systems, Santa Clara, CA; Arqana Technologies, Mississauga, Ontario, Canada; InfoStream ASA, Oslo, Norway; NTT Communicationware Corp., Chiba-shi, Chiba, Japan; eALITY, Inc., Foster City, CA; Anacomp, Inc., Poway, CA; APC (American Power Conversion), West Kingston, RI; Solect Technology Group, Toronto, Ontario, Canada; AppNet, Inc., Bethesda, MD; Virtual Source, Inc., Ventura, CA; TabWare Software, Greenville, SC; KPMG, LLP, Malvern, PA; J.D. Edwards & Co., Denver CO; Cybersource Corporation, San Jose, CA; Technology Solutions Company, Chicago, IL; Elite Information Group, Inc., Los Angeles, CA; On the Go Software, Sunnyvale, CA; 2ndWave, Dallas, TX; ASP Global Ltd., Salford, Manchester, United Kingdom; onShore, Inc., Chicago, IL; WinStar, New York, NY; Exenet Technologies, Inc., New York, NY; Design Automation Systems, Inc., Houston, TX; The TriZetto® Group, Newport Beach, CA; CollegeNET, Inc., Portland, OR; Capstan Systems, Inc., San Francisco, CA; Epicor Software Corporation, Irvine, CA; Peachtree Software, Inc., Norcross, GA; Stratech Limited, Singapore, Republic of Singapore; NightFire Software, Inc., Berkeley, CA; Campio Communications, Inc., Santa Clara, CA; and SPG, Chicago, IL have been added as parties to this venture. Also, Xanthon, Inc., Salt Lake City, UT; and Sound Computer Services, Altoona, PA have been dropped as parties to this venture.

No other changes have been made in either the membership or planned activity of the group research project. Membership in this group research project remains open, and Application Service Provider Industry Consortium, Inc. intends to file additional written notification disclosing all changes in membership.

On July 28, 1999, Application service Provider industry Consortium, Inc. filed its original notification pursuant to section 6(a) of the Act. A notice has not yet been published in the **Federal Register.**

Constance K. Robinson,

Director of Operations, Antitrust Division.

[FR Doc. 00–12046 Filed 5–11–00; 8:45 am]

BILLING CODE 4410–11–M

DEPARTMENT OF JUSTICE

Antitrust Division

Notice Pursuant to the National Cooperative Research and Production Act of 1993—Center for Waste Reduction Technologies (''CWRT''): Inherent Safety and Pollution Prevention Project

Notice is hereby given that, on October 8, 1999, pursuant to section 6(a) of the National Cooperative Research and Production Act of 1993, 15 U.S.C. 4301 *et seq.* (''the Act''), Center for Waste Reduction Technologies (''CWRT''): Inherent Safety and Pollution Prevention Project has filed written notifications simultaneously with the Attorney General and the Federal Trade Commission disclosing (1) the identities of the parties and (2) the nature and objectives of the venture. The notifications were filed for the purpose of invoking the Act's provisions limiting the recovery of antitrust to actual damages under specified circumstances. Pursuant to section 6(b) of the Act, the identities of the parties are Center for Waste Reduction Technologies, New York, NY; Center for Chemical Process Safety, New York, NY; American Institute of Chemical Engineers, New York, NY; Bristol-Meyers Squibb Co, New York, NY; E.I. Du Pont de Nemours & Co., Wilmington, DE; General Electric Company, Schenectady, NY; Kellogg Brown & Root, Houston, TX; Merck & Company, Whitehouse Station, NJ; Minnesota Mining & Manufacturing Co., St. Paul, MN; Novartis Corp., Summit, NJ; Rohm & Haas Co., Philadelphia, PA; and SmithKline Beecham Corp., King of Prussia, PA. The nature and objectives of the venture are to increase awareness of practitioners in the chemical process industry of the benefits of inherent safety and pollution prevention and to maximize economic return by minimizing risk and environmental impact. The project will have two phrases: (1) To develop an integrated inherent safety and pollution prevention methodology that can be applied to drive continuous improvement in processes and achieve profitability and product performance objectives; (2) to accelerate inherent safety and pollution prevention methodologies into process industries by employing ''best practices'' as examples and to develop a relevant ''training course''.

Participation in this venture will remain open to all qualified persons and organizations. The Participants intend to file additional written notification disclosing all changes in membership.

Constance K. Robinson,

Director of Operations, Antitrust Division.

[FR Doc. 00–12042 Filed 5–11–00; 8:45 am]

BILLING CODE 4410–11–M

DEPARTMENT OF JUSTICE

Antitrust Division

Notice Pursuant to the National Cooperative Research and Production Act of 1993—IAP Research, Inc.: Electromagnetic Dynamic Compaction II

Notice is hereby given that, on October 1, 1999, pursuant to Section 6(a) of the National Cooperative Research and Production Act of 1993, 15 U.S.C. 4301 *et seq.* (''the Act''), IAP Research, Inc. has filed written notifications simultaneously with the Attorney General and the Federal Trade Commission disclosing (1) the identities of the parties and (2) the nature and objectives of the venture. The notifications were filed for the purpose of invoking the Act's provisions limiting the recovery of antitrust plaintiffs to actual damages under specified circumstances. Pursuant to Section 6(b) of the Act, the identities of the parties are IAP Research, Inc., Dayton, OH; General Motors Powertrain, Pontiac, MI; Zenith Sintered Products, Germantown, WI; and Delphi, Anderson, IN. The nature and objectives of the venture are to conduct research on Electromagnetic Dynamic Compaction. The activities of this project will be partially funded by an award from the Advanced Technology Program, National Institute of Standards and Technology, Department of Commerce.

Constance K. Robinson,

Director of Operations, Antitrust Division.

[FR Doc. 00–12038 Filed 5–11–00; 8:45 am]

BILLING CODE 4410–11–M

DEPARTMENT OF JUSTICE

Antitrust Division

Notice Pursuant to the National Cooperative Research and Production Act of 1993—Management of Accelerated Technology Insertion II (MATI II)

Notice is hereby given that, on October 15, 1999, pursuant to section 6(a) of the National Cooperative Research and Production Act of 1993, 15 U.S.C. 4301 *et seq.* (''the Act''), Management of Accelerated Technology

Insertion II (MATI II) has filed written notifications simultaneously with the Attorney General and the Federal Trade Commission disclosing (1) the identities of the parties and (2) the nature and objectives of the venture. The notifications were filed for the purpose of invoking the Act's provisions limiting the recovery of antitrust plaintiffs to actual damages under specified circumstances. Pursuant to section 6(b) of the Act, the identities of the parties are The Coca-Cola Company, Atlanta, GA; Ford Motor Company, Redford, MI; IBD Inc., Winnetka, IL; Kellogg Company, Battle Creek, MI; Kraft Foods, Glenview, IL; Lucent Technologies, Murray Hill, NJ; McDonald's Corporation, Warrenville, IL; Redex Packaging Corporation, Schaumburg, IL; Rohm and Haas Company, Spring House, PA; and U.S.G. Corporation, Chicago, IL. Technologies Research Corporation of Ann Arbor, MI, has been engaged to administer the venture on behalf of the participants. The nature and objectives of the venture are to undertake research and development activities focusing on managing insertion 1f advanced technology.

Constance K. Robinson,

Director of Operations, Antitrust Division.

[FR Doc. 00–12047 Filed 5–11–00; 8:45 am]

BILLING CODE 4410–11–M

DEPARTMENT OF JUSTICE

Antitrust Division

Notice Pursuant to the National Cooperative Research and Production Act of 1993—Multiservice Switching Forum (''MSF'')

Notice is hereby given that, on October 12, 1999, pursuant to Section 6(a) of the National Cooperative Research and Production Act of 1993, 15 U.S.C. 4301 *et seq.* (''the Act''), Multiservice Switching Forum (''MSF'') has filed written notifications simultaneously with the Attorney General and the Federal Trade Commission disclosing changes in its membership status. The notifications were filed for the purpose of extending the Act's provisions limiting the recovery of antitrust plaintiffs to actual damages under specified circumstances. Specifically, France Telecom, Lannion Cedex, FRANCE has been added as a party to this venture.

No other changes have been made in either the membership or planned activity of the group research project. Membership in this group research project remains open, and Multiservice Switching Forum (''MSF'') intends to file additional written notification disclosing all changes in membership.

On January 22, 1999, Multiservice Switching Forum (''MSF'') filed its original notification pursuant to Section 6(a) of the Act. The Department of Justice published a notice in the **Federal Register** pursuant to Section 6(b) of the Act on May 26, 1999 (64 FR 28519).

The last notification was filed with the Department on July 1, 1999. A notice has not yet been published in the **Federal Register**.

Constance K. Robinson,

Director of Operations, Antitrust Division.

[FR Doc. 00–12037 Filed 5–11–00; 8:45 am]

BILLING CODE 4410–11–M

DEPARTMENT OF JUSTICE

Antitrust Division

Notice Pursuant to the National Cooperative Research and Production Act of 1993—Petroleum Environmental Research Forum (''PERF'')

Notice is hereby given that, on October 20, 1999, pursuant to Section 6(a) of the National Cooperative Research and Production Act of 1993, 15 U.S.C. 4301 *et seq.* (''the Act''), Petroleum Environmental Research Forum (''PERF'') has filed written notifications simultaneously with the Attorney General and the Federal Trade Commission disclosing changes in its membership status. The notifications were filed for the purpose of extending the Act's provisions limiting the recovery of antitrust plaintiffs to actual damages under specified circumstances. Specifically, Canadian Petroleum Products Institute, Toronto, Ontario, Canada has been added as a party to this venture.

No other changes have been made in either the membership or planned activity of the group research project. Membership in this group research project remains open, and Petroleum Environmental Research Forum (''PERF'') intends to file additional written notification disclosing all changes in membership.

On February 10, 1986, Petroleum Environmental Research Forum (''PERF'') filed its original notification pursuant to Section 6(a) of the Act. The Department of Justice published a notice in the **Federal Register** pursuant to Section 6(b) of the Act on March 14, 1986 (51 FR 8903).

The last notification was filed with the Department on June 2, 1999. A notice was published in the **Federal Register** pursuant to Section 6(b) of the Act on December 2, 1999 (64 FR 67590).

Constance K. Robinson,

Director of Operations, Antitrust Division.

[FR Doc. 00–12040 Filed 5–11–00; 8:45 am]

BILLING CODE 4410–11–M

DEPARTMENT OF JUSTICE

Antitrust Division

Notice Pursuant to the National Cooperative Research and Production Act of 1993—Petroleum Environmental Research Forum (''PERF'') Project

Notice is hereby given that, on October 21, 1999, pursuant to section 6(a) of the National Cooperative Research and Production Act of 1993, 15 U.S.C. 4301 *et seq.* (''the Act''), Exxon Research & Engineering Company (''ER&E'') has filed written notifications simultaneously with the Attorney General and the Federal Trade Commission disclosing (1) the identities of the parties and (2) the nature and objectives of the venture. The notifications were filed for the purpose of invoking the Act's provisions limiting the recovery of antitrust plaintiffs to actual damages under specified circumstances. Pursuant to section 6(b) of the Act, the identities of the parties are Exxon Research and Engineering Company, Florham Park, NJ; Phillips Petroleum Company, Bartlesville, OK; Sunoco, Inc., Philadelphia, PA; Mobil Technology Company, Paulsboro, NJ; Conoco, Inc., Ponca City, OK; CITGO, Corpus Christi, TX; and BP-Amoco Oil International, Ltd., Middlesex, United Kingdom. The nature an objectives of the venture are the development of guidelines for carbon steel metallurgy and welding procedures for HF alkylations plants. Participation in this project will remain open until issuance of the final project report. The participants intend to file additional written notifications disclosing all changes in membership.

Constance K. Robinson,

Director of Operations, Antitrust Division.

[FR Doc. 00–12043 Filed 5–11–00; 8:45 am]

BILLING CODE 4410–11–M

DEPARTMENT OF JUSTICE

Antitrust Division

Notice Pursuant to the National Cooperative Research and Production Act of 1993—Petrotechnical Open Software Corporation (''POSC'')

Notice is hereby given that, on October 25, 1999, pursuant to section 6(a) of the National Cooperative Research and Production Act of 1993, 15 U.S.C. 4301 *et seq.* (''the Act''), Petrotechnical Open Software Corporation (''POSC'') has filed written notifications simultaneously with the Attorney General and the Federal Trade Commission disclosing changes in its membership status. The notifications were filed for the purpose of extending the Act's provisions limiting the recovery of antitrust plaintiffs to actual damages under specified circumstances. Specifically, PIDX Petroleum Industry Data Exchange, Findlay, OH has been added as a party to this venture.

No other changes have been made in either the membership or planned activity of the group research project. Membership in this group research project remains open, and Petrotechnical Open Software Corporation (''POSC'') intends to file additional written notification disclosing all changes in membership.

On January 14, 1991, Petrotechnical Open Software Corporation (''POSC'') filed its original notification pursuant to section 6(a) of the Act. The Department of Justice published a notice in the **Federal Register** pursuant to section 6(b) of the Act on February 7, 1991 (56 FR 5021).

The last notification was filed with the Department on August 3, 1999. A notice has not yet been published in the **Federal Register**.

Constance K. Robinson,

Director of Operations, Antitrust Division.

[FR Doc. 00–12045 Filed 5–11–00; 8:45 am]

BILLING CODE 4410–11–M

DEPARTMENT OF JUSTICE

Antitrust Division

Notice Pursuant to the National Cooperative Research and Reproduction Act of 1993—Rotorcraft Technology Association, Inc. (''RITA'')

Notice is hereby given that, on November 24, 1999, pursuant to section 6(a) of the National Cooperative Research and Production Act of 1993, 15 U.S.C. 4301 *et seq.* (''the Act''), Rotorcraft Technology Association, Inc. (''RITA'') has filed written notifications simultaneously with the Attorney General and the Federal Trade Commission disclosing changes in its membership status. The notifications were filed for the purpose of extending the Act's provisions limiting the recovery of antitrust plaintiffs to actual damages under specified circumstances. Specifically, Arizona State University, Tempe, AZ; Ohio Aerospace Institute, Cleveland, OH; University of California, Los Angeles, CA; University of Texas at Arlington, Arlington, TX; and West Virginia University, Morgantown, WV have been added as parties to this venture.

No other changes have been made in either the membership or planned activity of the group research project. Membership in this group research project remains open, and Rotorcraft Technology Association, Inc. (''RITA'') intends to file additional written notification disclosing all changes in membership.

On September 28, 1995, Rotorcraft Technology Association, Inc. (''RITA'') filed its original notification pursuant to section 6(a) of the Act. The Department of Justice published a notice in the **Federal Register** pursuant to section 6(b) of the Act on April 3, 1996 (61 FR 14817).

The last notification was filed with the Department on January 7, 1999. A notice was published in the **Federal Register** pursuant to section 6(b) of the Act on March 19, 1999 (64 FR 13605).

Constance K. Robinson,

Director of Operations, Antitrust Division.

[FR Doc. 00–12041 Filed 5–11–00; 8:45 am]

BILLING CODE 4410–11–M

DEPARTMENT OF JUSTICE

Antitrust Division

Notice Pursuant to the National Cooperative Research and Production Act of 1993—Secure Digital Music Initiative (''SDMI'')

Notice is hereby given that, on October 4, 1999, pursuant to section 6(a) of the National Cooperative Research and Production Act of 1993, 15 U.S.C. 4301 *et seq.* (''the Act''), Secure Digital Music Initiative (''SDMI'') has filed written notifications simultaneously with the Attorney General and the Federal Trade Commission disclosing changes in its membership status. The notifications were filed for the purpose of extending the Act's provisions limiting the recovery of antitrust plaintiffs to actual damages under specified circumstances. Specifically, Bose Corporation, Framingham, MA; Canadian Audiotrak, Toronto, Canada; Casio, Tokyo, Japan; Cinram International, Inc., Scarborough, Ontario, Canada; Digital River Inc., Eden Prairie, MN; Gemplus Corporation, Montgomeryville, PA; General Instrument, Horsham, PA; Intervu, Inc., San Diego, CA; Lexar Media, Inc., Fremont, CA; Media Fair, Inc., Monterey Park, CA; Micronas Semiconductors, Inc., San Jose, CA; Nokia UK Limited, London, England; Packard Bell NEC, Inc., Sacramento, CA; Philips, Briarcliff Manor, NY; Plug 'n Play Technologies, Inc., Hauppauge, NY; Portal Player, Inc., Saratoga, CA; Pricewaterhouse Coopers, Tampa, FL; Qdesign, Vancouver, B.C., Canada; Saehan Information Systems Co., LTD, Seoul, South Korea; Softlock Services, Rochester, NY; Sonic Foundry, Inc., Madison, WI; SpectraNet Communications, Inc.—ThrottleBox, Johnson City, NY; Sun Microsystems, Palo Alto, CA; Telian Corporation, Kyonggi, South Korea; WavePhore, Phoenix, AZ; and Xerox Corp., Rochester, NY have been added as parties to this venture. Also Emusic.com, Inc., Redwood City, CA has change its name to GoodNoise Corporation.

No other changes have been made in either the membership or planned activity of the group research project. Membership in this group research project remains open, and Secure Digital Music Initiative (''SDMI'') intends to file additional written notification disclosing all changes in membership.

On June 28, 1999, Secure Digital Music Initiative (''SDMI'') filed its original notification pursuant to section 6(a) of the Act. A notice has not yet been published in the **Federal Register**.

Constance K. Robinson,

Director of Operations, Antitrust Division.

[FR Doc. 00–12044 Filed 5–11–00; 8:45 am]

BILLING CODE 4410–11–M

DEPARTMENT OF JUSTICE

Antitrust Division

Notice Pursuant to the National Cooperative Research and Production Act of 1993—United Technologies Research Center (''UTRC''): Open Software Tools for Condition Based Maintenance

Notice is hereby given that, on October 19, 1999, pursuant to section 6(a) of the National Cooperative Research and Production Act of 1993, 15 U.S.C. 4301 *et seq.* (''the Act''), United Technologies Research Center (''UTRC'') has filed written notifications simultaneously with the Attorney

General and the Federal Trade Commission disclosing (1) the identities of the parties and (2) the nature and objectives of the venture. The notifications were filed for the purpose of invoking the Act's provisions limiting the recovery of antitrust plaintiffs to actual damages under specified circumstances. Pursuant to section 6(b) of the Act, the identities of the parties are United Technologies Corporation (''UTC''), Hartford, CT; and i2 Federal, Inc., Irving, TX. The nature and objectives of the venture are to engage in cooperative research and development in the area of Open Software Tools for Condition Based Maintenance pursuant to an Advanced Technology Program with the National Institute of Standards and Technology.

Constance K. Robinson,

Director of Operations, Antitrust Division.

[FR Doc. 00–12048 Filed 5–11–00; 8:45 am]

BILLING CODE 4410–11–M

DEPARTMENT OF JUSTICE

Antitrust Division

Notice Pursuant to the National Cooperative Research and Production Act of 1993—Water Heater Industry Joint Research and Development Consortium

Notice is hereby given that, on December 3, 1999, pursuant to Section 6(a) of the National Cooperative Research and Production Act of 1993, 15 U.S.C. 4301 *et seq.* (''the Act''), the Water Heater Industry Joint Research and Development Consortium (''the Consortium'') has filed written notifications simultaneously with the Attorney General and the Federal Trade Commission disclosing changes in its membership status. The notifications were filed for the purpose of extending the Act's provisions limiting the recovery of antitrust plaintiffs to actual damages under specified circumstances. Specifically, A. O. Smith Water Products Company, a division of A.O. Smith Corporation, Irving, TX has been added as a party to this venture.

No other changes have been made in either the membership or planned activity of the group research project. Membership in this group research project remains open, and the Consortium intends to file additional written notification disclosing all changes in membership.

On February 28, 1995, the Consortium filed its original notification pursuant to Section 6(a) of the Act. The Department of Justice published a notice in the **Federal Register** pursuant to Section 6(b) of the Act on March 27, 1995 (60 FR 15789).

The last notification was filed with the Department on March 17, 1999. A notice was published in the **Federal Register** pursuant to Section 6(b) of the Act on October 1, 1999 (64 FR 53416).

Constance K. Robinson,

Director of Operations, Antitrust Division.

[FR Doc. 00–12039 Filed 5–11–00; 8:45 am]

BILLING CODE 4410–11–M

DEPARTMENT OF JUSTICE

Drug Enforcement Administration

Danilo Abud-Sanchez, M.D.; Revocation of Registration

On August 5, 1999, the Deputy Assistant Administrator, Office of Diversion Control, Drug Enforcement Administration (DEA) issued an Order to Show Cause to Danilo Abud-Sanchez, M.D., of Paramount, California, notifying him of an opportunity to show cause as to why DEA should not revoke his DEA Certificate of Registration BA3042657 pursuant to 21 U.S.C. 824(a)(3), and deny any pending applications for renewal of his registration pursuant to 21 U.S.C. 823(f), for reason that he is not currently authorized to handle controlled substances in the State of California. The order also notified Dr. Abud-Sanchez that should no request for a hearing be filed within 30 days, his hearing right would be deemed waived.

DEA first sent the Order to Show Cause to Dr. Abud-Sanchez at his registered location, and it was returned unclaimed. Next, the Order to Show Cause was sent to Dr. Abud-Sanchez at a residential address, and it too was returned unclaimed. DEA investigators then contacted Dr. Abud-Sanchez' legal counsel who indicated that he would accept service of the Order to Show Cause on behalf of Dr. Abud-Sanchez. The Order to Show Cause was sent to Dr. Abud-Sanchez' legal counsel and DEA received a signed receipt indicating that the Order to Show Cause was received on October 25, 1999.

No request for a hearing or any other reply was received by DEA from Dr. Abud-Sanchez or anyone purporting to represent him in this matter. Therefore, the Deputy Administrator, finding that (1) 30 days have passed since the receipt of the Order to Show Cause, and (2) no request for a hearing having been received, concludes that Dr. Abud-Sanchez is deemed to have waived his hearing right. After considering material from the investigative file in this matter, the Deputy Administrator now enters his final order without a hearing pursuant to 21 CFR 1301.43(d) and (e) and 1301.46.

The Deputy Administrator finds that Dr. Abud-Sanchez currently possesses DEA Certificate of Registration BA3042657 issued to him in California. The Deputy Administrator further finds that effective February 17, 1997, the Medical Board of California revoked Dr. Abud-Sanchez' license to practice medicine. Dr. Abud-Sanchez did not present any evidence that his medical license has since been reinstated in California and there is no such evidence in the investigative file. Therefore, the Deputy Administrator finds that Dr. Abud-Sanchez is not currently authorized to practice medicine in the State of California and as a result, it is reasonable to infer that he is also not authorized to handle controlled substances in that state.

The DEA does not have the statutory authority under the Controlled Substances Act to issue or maintain a registration if the applicant or registrant is without state authority to handle controlled substances in the state in which he conducts his business. See U.S.C. 802(21), 832(f) and 824(a)(3). This prerequisite had been consistency upheld. See Romeo. J. Perez, M.D., 62 FR 16,193 (1997); Demetris A. Green, M.D., 61 FR 70,728 (1996); Domminick A. Ricci, M.D., 58 FR 51,104 (1993).

Here it is clear that Dr. Abud-Sanchez is not currently authorized to handle controlled substances in the State of California. As a result, he is not entitled to a DEA registration in that state.

Accordingly, the Deputy Administrator of the Drug Enforcement Administration, pursuant to the authority vested in him by 21 U.S.C. 823 and 824 and 28 CFR 0.100(b) and 0.104, hereby orders that DEA Certificate of Registration BA3042657, previously issued to Danilo Abud-Sanchez, M.D., be, and it hereby is, revoked. The Deputy Administrator further orders that any pending applications for the renewal of such registration, be, and they hereby are, denied. This order is effective June 12, 2000.

Dated: May 4, 2000.

Donnie R. Marshall,

Deputy Administrator.

[FR Doc. 00–11887 Filed 5–11–00; 8:45 am]

BILLING CODE 4410–09–M

DEPARTMENT OF JUSTICE

Drug Enforcement Administration

[Docket No. 99–24]

Robert P. Doughton, M.D.; Denial of Application

On April 14, 1999, the Deputy Assistant Administrator, Office of Diversion Control, Drug Enforcement Administration (DEA) issued an Order to Show Cause to Robert P. Doughton, M.D. (Respondent) of Portland, Oregon, notifying him of an opportunity to show cause as to why DEA should not deny his application for a DEA Certificate of Registration as a practitioner pursuant to 21 U.S.C. 823(f), for reason that his registration would be inconsistent with the public interest.

DEA received a request for a hearing from Respondent on May 28, 1999, and the matter was docketed before Administrative Law Judge Mary Ellen Bittner. Following prehearing procedures, a hearing commenced on November 3, 1999, in Portland, Oregon. Due to an emergency situation in the courtroom that occurred in the midst of the hearing, Judge Bittner indefinitely postponed the hearing.

On November 10, 1999, the Government filed a Motion for Summary Disposition, alleging that Respondent is not currently authorized to handle controlled substances in Oregon, the state where he seeks registration with DEA. Judge Bittner gave Respondent an opportunity to file a response to the Government's motion, however no such response was filed.

On December 22, 1999, Judge Bittner issued her Opinion and Recommended Decision finding that Respondent lacks authorization to handle controlled substances in the State of Oregon; granting the Government's Motion for Summary Disposition; and recommending that Respondent's application for a DEA Certificate of Registration be denied. Neither party filed exceptions to her Opinion and Recommended Decision, and on January 24, 2000, Judge Bittner transmitted the record of these proceedings to the Deputy Administrator.

The Deputy Administrator has considered the record in its entirety, and pursuant to 21 CFR 1316.67, hereby issues his final order based upon findings of fact and conclusions of law as hereinafter set forth. The Deputy Administrator adopts, in full, the Opinion and Recommended Decision of the Administrative Law Judge.

The Deputy Administrator finds that Respondent submitted an application for a DEA Certificate of Registration in Schedules IV and V at an address in Portland, Oregon. The Deputy Administrator further finds that the Oregon Board of Medical Examiners issued on Order on October 15, 1999, suspending Respondent's medical license. Respondent did not offer any evidence to dispute the suspension of his Oregon medical license. Therefore, the Deputy Administrator finds that Respondent is not currently authorized to practice medicine in the State of Oregon and as a result, it is reasonable to infer that he is also not authorized to handle controlled substances in that state.

DEA does not have the statutory authority under the Controlled Substances Act to issue or maintain a registration if the applicant or registrant is without state authority to handle controlled substances in the state in which he conducts his business. See 21 U.S.C. 802(21), 823(f), and 824(a)(3). This prerequisite has been consistently upheld. See Romeo J. Perez, M.D., 62 FR 16,193 (1997); Demetris A. Green, M.D., 61 FR 60,728 (1996); Dominick A. Ricci, M.D., 58 FR 51,104 (1993).

Respondent has not denied that he is not currently authorized to handle controlled substances in Oregon. Since Respondent lacks this state authority, he is not entitled to a DEA registration in that state.

In light of the above, Judge Bittner properly granted the Government's Motion for Summary Disposition. The parties did not dispute the fact that Respondent is currently unauthorized to handle controlled substances in Oregon. It is well-settled that when no question of material fact is involved, aplenary, adversary administrative proceeding involving evidence and cross-examination of witnesses is not obligatory. See Gilbert Ross, M.D., 61 FR 8664 (1996); Philip E. Kird, M.D., 48 FR 32,887 (1983), aff'd sub nom Kird v. Mullen, 749 F.2d 297 (6th Cir. 1984); NLRB v. International Association of Bridge, Structural and Ornamental Ironworkers, AFL–CIO, 549 F.2d 634 (9th Cir. 1977).

Accordingly, the Deputy Administrator of the Drug Enforcement Administration, pursuant to the authority vested in him by 21 U.S.C. 823 and 824 and 28 CFR 0.100(b) and 0.104, hereby orders that the application for a DEA Certificate of Registration submitted by Robert P. Doughton, M.D., be, and it hereby is, denied. This order is effective June 12, 2000.

Dated: May 4, 2000.

Donnie R. Marshall,

Deputy Administrator.

[FR Doc. 00–11886 Filed 5–11–00; 8:45 am]

BILLING CODE 4410–09–M

DEPARTMENT OF JUSTICE

Drug Enforcement Administration

Manufacturer of Controlled Substances; Notice of Application

Pursuant to Section 1301.33(a) of Title 21 of the Code of Federal Regulations (CFR), this is notice that on March 29, 2000, Dupont Pharmaceuticals, 1000 Stewart Avenue, Garden City, New York 11530, made application by renewal to the Drug Enforcement Administration (DEA) for registration as bulk manufacturer of the basic classes of controlled substances listed below:

Drug	Schedule
Oxycodone (9143)	II
Hydrocodone (9193)	II
Oxymorphone (9652)	II

The firm plans to manufacture the listed controlled substances to make finished products.

Any other such applicant and any person who is presently registered with DEA to manufacture such substance may file comments or objections to the issuance of the proposed registered.

Any such comments or objections may be addressed, in quintuplicate, to the Deputy Assistant Administrator, Office of Diversion Control. Drug Enforcement Administration, United States Department of Justice, Washington, DC 20537, Attention: DEA Federal Register Representative (CCR), and must be filed no later than July 11, 2000.

Dated: May 1, 2000.

John H. King,

Deputy Assistant Administrator, Office of Diversion Control, Drug, Enforcement Administration.

[FR Doc. 00–11891 Filed 5–11–00; 8:45 am]

BILLING CODE 4410–09–M

DEPARTMENT OF JUSTICE

Drug Enforcement Administration

Manufacturer of Controlled Substances; Notice of Application

Pursuant to Section 1301.33(a) of Title 21 of the Code of Federal Regulations (CFR), this is notice that on December 21, 1999, Johnson Matthey, Inc., Custom Pharmaceuticals Department, 2003

Nolte Drive, West Deptford, New Jersey 08066, made application by renewal to the Drug Enforcement Administration (DEA) for registration as a bulk manufacturer of the basic classes of controlled substances listed below:

Drug	Schedule
Tetrahydrocannabinols (7370)	I
Difenoxin (9168)	I
Propiram (9649)	I
Amphetamine (1100)	II
Methamphetamine (1105)	II
Methylphenidate (1724)	II
Codeine (9050)	II
Oxycodone (9143)	II
Hydromorphone (9150)	II
Hydrocodone (9193)	II
Meperidine (9230)	II
Morphine (9300)	II
Thebaine (9333)	II
Alfentanil (9737)	II
Sufentanil (9740)	II
Fentanyl (9801)	II

The firm plans to manufacture the listed controlled substances in bulk to supply final dosage form manufacturers.

Any other such applicant and any person who is presently registered with DEA to manufacture such substances may file comments or objections to the issuance of the proposed registration.

Any such comments or objections may be addressed, in quintuplicate, to the Deputy Assistant Administrator, Office of Diversion Control, Drug Enforcement Administration, United States Department of Justice, Washington, DC 20537, Attention: DEA Federal Register Representative (CCR), and must be filed no later than July 11, 2000.

Dated: May 1, 2000.

John H. King,

Deputy Assistant Administrator, Office of Diversion Control, Drug Enforcement Administration.

[FR Doc. 00–11892 Filed 5–11–00; 8:45 am]

BILLING CODE 4410–09–M

DEPARTMENT OF JUSTICE

Drug Enforcement Administration

Manufacturer of Controlled Substances; Notice of Application

Pursuant to Section 1301.33(a) of Title 21 of the Code of Federal Regulations (CFR), this is notice that on March 21, 2000, Lifepoint, Inc., 10410 Trademark Street, Rancho Cucamonga, California 91730, made application by renewal to the Drug Enforcement Administration (DEA) for the registration as a bulk manufacturer of the basic classes of controlled substances listed below:

Drug	Schedule
Tetrahydrocannabinols (7370)	I
Amphetamine (1100)	II
Methamphetamine (1105)	II
Phencyclidine (7471)	II
Benzoylecgonine (9180)	II
Morphine (9300)	II

The firm plans to use gram quantities of the listed controlled substances to manufacture drug abuse test kits.

Any other such applicant and any person who is presently registered with DEA to manufacture such substance may file comments or objections to the issuance of the proposed registration.

Any such comments or objections may be addressed, in quintuplicate, to the Deputy Assistant Administrator, Office of Diversion Control, Drug Enforcement Administration, United States Department of Justice, Washington, D.C. 20537, Attention: DEA Federal Register Representative (CCR), and must be filed no later than July 11, 2000.

Dated: April 21, 2000.

John H. King,

Deputy Assistant Administrator Office of Diversion Control Drug Enforcement Administration.

[FR Doc. 00–11888 Filed 5–11–00; 8:45 am]

BILLING CODE 4410–09–M

DEPARTMENT OF JUSTICE

Drug Enforcement Administration

Important of Controlled Substances; Notice of Application

Pursuant to Section 1008 of the Controlled Substance Import and Export Act (21 U.S.C. 958(i)), the Attorney General shall, prior to issuing a registration under this Section to a bulk manufacturer of a controlled substance in Schedule I or II and prior to issuing a regulation under Section 1002(a) authorizing the important of such a substance, provide manufacturers holding registrations for the bulk manufacture of the substance an opportunity for a hearing.

Therefore, in accordance with Section 1301.34 of Title 21, Code of Federal Regulations (CFR), notice is hereby given that on February 27, 2000, Lipomed, Inc., One Broadway, Cambridge, Massachusetts 02142, made application to the Drug Enforcement Administration to be registered as an importer of the basic classes of controlled substances listed below:

Drug	Schedule
Cathinone (1235)	I
Methaqualone (2565)	I
Lysergic acid diethylamide (7315)	I
Marihuana (7360)	I
Tetrahydrocannabinols (7370)	I
Mescaline (7381)	I
3,4,5-Trimethoxyamphetamine (7390).	I
4-Bromo-2, 5-dimethoxyamphetamine (7391).	I
4-Methy1-2, 5-dimethoxyamphetamine (7395).	I
2,5-Dimethoxyamphetamine (7396).	I
2,5-Dimethoxy-4-ethylamphetamine (7399).	I
3,4-Methylenedioxyamphetamine (7400).	I
3,4-Methylenedioxy-N-ethylamphetamine (7404).	I
3,4-Methylenedioxymethamphetamine (7405).	I
Psilocybin (7437)	I
Psilocyn (7438)	I
Acetyldihydrocodeine (9051)	I
Dihydromorphine (9145)	I
Heroin (9200)	I
Tilidine (9750)	I
Amphetamine (1100)	II
Methamphetamine (1105)	II
Amobarbital (2125)	II
Secobarbital (2315)	II
Phencyclidine (7471)	II
Cocaine (9041)	II
Codeine (9050)	II
Dihydroccodeine (9120)	II
Oxycodone (9143)	II
Hydromorphone (9150)	II
Benzoylecgonine (9180)	II
Hydrocodone (9193)	II
Levorphanol (9220)	II
Methadone (9250)	II
Dextropropoxyphene, bulk (non-dosage forms) (9273).	II
Morphine (9300)	II
Thebaine (9333)	II
Oxymorphone (9652)	II
Alfentanil (9737)	II
Fentanyl (9801)	II

The firm plans to import small reference standard quantities of finished commercial product from its sister company in Switzerland for sale to its customers for drug testing and pharmaceutical research and development.

Any manufacturer holding, or applying for, registration as a bulk manufacturer of these basic classes of controlled substances may file written comments on or objections to the application described above and may, at the same time, file a written request for a hearing on such application in accordance with 21 CFR 1301.43 in such form as prescribed by 21 CFR 1316.47.

Any such comments, objections or requests for a hearing may be addressed, in quintuplicate, to the Deputy Assistant Administrator, Office of Diversion

Control, Drug Enforcement Administration, United States Department of Justice, Washington, DC 20537, Attention: DEA Federal Register Representative (CCR), and must be filed no later than June 12, 2000.

This procedure is to be conducted simultaneously with an independent of the procedures described in 21 CFR 1301.34(b), (c), (d), (e), and (f). As noted in a previous notice at 40 FR 43745–46 (September 23, 1975), all applicants for registration to import the basic classes of any controlled substances in Schedule I or II are and will continue to be required to demonstrate to the Deputy Assistant Administrator, Office of Diversion Control, Drug Enforcement Administration that the requirements for such registration pursuant to 21 U.S.C. 958(a), 21 U.S.C. 823(a), and 21 CFR 1301.34(a), (b), (c), (d), (e), and (f) are satisfied.

Dated: April 25, 2000.

John H. King,

Deputy Assistant Administrator, Office of Diversion Control, Drug Enforcement Administration.

[FR Doc. 00–11885 Filed 5–11–00; 8:45 am]

BILLING CODE 4410–09–M

DEPARTMENT OF JUSTICE

Drug Enforcement Administration

Manufacturer of Controlled Substances; Notice of Application

Pursuant to Section 1301.33(a) of Title 21 of the Code of Federal Regulations (CFR), this is notice that on January 25, 2000, Mallinckrodt, Inc., Mallinckrodt & Second Streets, St. Louis, Missouri 63147, made application by renewal to the Drug Enforcement Administration (DEA) for registration as a bulk manufacturer of the basic classes of controlled substances listed below:

Drug	Schedule
Tetrahydrocannabinols (7370)	I
Dihydromorphine (9145)	I
Amphetamine (1100)	II
Methylphenidate (1724)	II
Cocaine (9041)	II
Codeine (9050)	II
Diprenorphine (9058)	II
Etorphine Hydrochloride (9059)	II
Dihydrocodeine (9120)	II
Oxycodone (9143)	II
Hydromorphone (9150)	II
Diphenoxylate (9170)	II
Hydrocodone (9193)	II
Levorphanol (9220)	II
Meperidine (9230)	II
Methadone (9250)	II
Methadone-intermediate (9254)	II
Dextropropoxyphene, bulk (non-dosage forms) (9273).	II
Morphine (9300)	II
Thebaine (9333)	II
Opium extracts (9610)	II
Opium fluid extract (9620)	II
Opium tincture (9630)	II
Opium powdered (9639)	II
Opium granulated (9640)	II
Levo-alphacetylmethadol (9648)	II
Oxymorphone (9652)	II
Noroxymorphone (9668)	II
Alfentanil (9737)	II
Sufentanil (9740)	II
Fentanyl (9801)	II

The firm plans to manufacture the controlled substances for distribution as bulk products to its customers.

Any other such applicant and any person who is presently registered with DEA to manufacture such substances may file comments or objections to the issuance of the proposed registration.

Any such comments or objections may be addressed, in quintuplicate, to the Deputy Assistant Administrator, Office of Diversion Control, Drug Enforcement Administration, United States Department of Justice, Washington, D.C. 20537, Attention: DEA Federal Register Representative (CCR), and must be filed no later than July 11, 2000.

Dated: April 21, 2000.

John H. King,

Deputy Assistant Administrator, Office of Diversion Control, Drug Enforcement Administration.

[FR Doc. 00–11889 Filed 5–11–00; 8:45 am]

BILLING CODE 4410–09–M

DEPARTMENT OF JUSTICE

Drug Enforcement Administration

[Docket No. 98–34]

Edson W. Redard, M.D., Continuation of Registration With Restrictions

On June 12, 1998, the Deputy Assistant Administrator, Office of Diversion Control, Drug Enforcement Administration (DEA) issued an Order to Show Cause to Edson W. Redard, M.D. (Respondent) of Sacramento, California, notifying him of an opportunity to show cause as to why DEA should not revoke his DEA Certificate of Registration BR1670012 and deny any pending applications for renewal of such registration as a practitioner pursuant to 21 U.S.C. 823(f), 824(a)(2) and (a)(4).

By letter dated June 26, 1998, Respondent, through counsel, filed a request for a hearing, and following prehearing procedures, a hearing was held in Sacramento, California on April 27 and 28, 1999, before Administrative Law Judge Mary Ellen Bittner. At the hearing both parties called witnesses to testify and introduced documentary evidence. After the hearing both parties submitted proposed findings of fact, conclusions of law and argument. On December 20, 1999, Judge Bittner issued her Opinion and Recommended Ruling, Findings of Fact, Conclusions of Law and Decision, recommending that Respondent's registration not be revoked subject to two restrictions. Neither party filed exceptions to Judge Bittner's Opinion and Recommended Ruling, Findings of Fact, Conclusions of Law and Decision, and on January 24, 2000, the record was transmitted to the Deputy Administrator.

The Deputy Administrator has considered the record in its entirety, and pursuant to 21 CFR 1316.67, hereby issues his final order based upon findings of fact and conclusions of law as hereinafter set forth. The Deputy Administrator adopts the Opinion and Recommended Ruling, Findings of Fact, Conclusions of Law and Decision of the Administrative Law Judge, but includes additional restrictions on Respondent's continued registration. His adoption is in no manner diminished by any recitation of facts, issues and conclusions herein, or of any failure to mention a matter of fact or law.

The Deputy Administrator finds that Respondent graduated from medical school in 1987, and in 1991 he began working as a family practitioner at a large multi-specialty clinic in Sacramento, California.

On August 27, 1997, a pharmacist called the California Department of Justice, Bureau of Narcotic Enforcement (BNE) and told an investigator that on May 20, 1997, Respondent had presented a prescription in the name of Donald Gram, for Vicodin ES, a Schedule III controlled substance. At that time, Respondent filled out a patient information form using the name Donald Gram. The pharmacist had previously met Respondent when she worked at another pharmacy, so she knew that this was not Respondent's name. Further investigation revealed that the address given to the pharmacist on the patient information form was Respondent's address.

The pharmacist told the investigator that Respondent had presented another prescription for Vicodin on July 25, 1997, which another pharmacist filled. The pharmacist further told the investigator that a pharmacy technician advised her that Respondent had presented controlled substance prescriptions in the name Carol Jordan.

Subsequently, the investigator obtained prescriptions issued to Carol Jordan on Respondent's prescription forms from three different pharmacies. These prescriptions accounted for 1,510 dosage units of Vicodin ES for the period February 27, 1995 to August 26, 1997.

Thereafter on October 20, 1997, the pharmacist again contacted the investigator and advised him that Respondent had just presented two prescriptions, one for 80 dosage units of Vicodin ES and the other for a non-controlled substance, in the name of Donald Gram. The investigator also learned that on October 17, 1997, one of the other pharmacies had filled a prescription issued to Carol Jordan on Respondent's prescription form for 80 dosage units of Vicodin ES. A check of Department of Motor Vehicle records revealed no matches for the purported names and dates of birth of Donald Gram or Carol Jordan.

On November 24, 1997, a search warrant for Respondent's office, residence and car was executed. In Respondent's car, the investigators found prescription receipts and numerous empty prescription bottles in the names of Donald Gram and Carol Jordan. In the master bedroom of Respondent's residence, the investigators found empty prescription bottles and physician samples.

During the search an investigator with the Medical Board of California (Medical Board) interviewed a physician assistant whom Respondent supervised. The physician assistant admitted to calling in about four prescriptions for Vicodin for Respondent during the previous year using another physician's name.

Respondent cooperated with the investigators during the search, and admitted that he was addicted to Vicodin. Respondent told the Medical Board investigator that he was originally prescribed Vicodin for two or three months for a back problem. At some point he stopped taking the drug for approximately six months but resumed taking it sometime in 1995. Respondent told the Medical Board investigator that initially he took two or three tablets per day, but that as of the date of the search he was taking eight to twelve tablets per day. Respondent also admitted to taking Ionamin, Ambien, Doral, Brontex, and Xanax, all controlled substances. Further, Respondent admitted that he had issued prescriptions in the fictitious names Donald Gram and Carol Jordan; that he asked the physician assistant to call in prescriptions for him; and that he know that when the physician assistant called in those prescriptions the physician assistant indicated that they were authorized by another physician.

Following the execution of the search warrant, Respondent was arrested and charged with obtaining a controlled substance by fraud, prescribing for a non-patient, and possession of a controlled substance.

After Respondent's arrest, the Medical Board investigator continued her investigation of Respondent and discovered several additional prescriptions written prior to Respondent's arrest in the name of Donald Gram or Carol Jordan for a total of 720 dosage units of Vicodin or its generic equivalent. In addition the investigator found four prescriptions, each for 50 dosage units of Vicodin ES, that were called into a local pharmacy between July 23, 1996 and October 30, 1997. Three of these prescriptions were called in by the physician assistant and one was called in by a nurse practitioner at the clinic where Respondent was employed. All of these prescriptions indicated that they were authorized by a physician other than Respondent. The Medical Board investigator interviewed the physicians who allegedly authorized these prescriptions and they indicated that they had not authorized the prescriptions and were unaware that their names had been used.

On December 1, 1997, Respondent was arraigned in the Sacramento Superior/Municipal Court on three felony counts of obtaining and attempting to obtain hydrocodone by fraud. On March 9, 1998, Respondent pled nolo contendere to one count and the court ordered that he be diverted from further proceedings for an 18-month period. On March 18, 1998, the Sacramento County Probation Department ordered Respondent to obtain counseling from the Mexican-American Alcohol Program. Respondent testified that he successfully completed this program. On April 12, 1999, the court entered an order terminating Respondent's diversion, and ultimately dismissed the criminal proceedings.

On December 23, 1997, an interim suspension of Respondent's license to practice medicine was issued. Thereafter, on January 9, 1998, the Medical Board filed an Accusation against Respondent alleging that Respondent had written prescriptions for Vicodin for fictitious persons, asked a physician assistant to call in prescriptions for Vicodin purportedly on the authorization of another physician, admitted abusing Vicodin and other controlled substances, and tested positive for hydrocodone on November 24, 1997.

Effective March 19, 1998, Respondent and the Medical Board entered into an Agreement in Lieu of Discipline wherein Respondent agreed to enter and complete the Medical Board's Diversion Program and the Medical Board agreed to withdraw the Accusation upon Respondent's successful completion of that program. Respondent's authority to handle controlled substances was not limited.

On April 9, 1998, the Medical Board issued a Modification of Interim Suspension Order, permitting Respondent to return to the practice of medicine on condition that he be monitored by the Diversion Program, meet with the Diversion Evaluation Committee, and sign a Diversion Agreement after that meeting. In May 1998, Respondent formally entered the Medical Board's Diversion Program and on June 24, 1998, the Medical Board terminated the interim suspension of Respondent's medical license.

At the hearing in this matter, Respondent testified that he injured his back in 1991, and that after his physician stopped issuing him prescriptions for Vicodin, he took samples of the drug from his office. He also admitted that although Vicodin was his drug of choice, he also took samples of other drugs to avoid the symptoms of withdrawal. According to Respondent, his drug abuse intensified in 1995 during the breakup of his marriage. He became concerned that he was taking too many samples from his office, so he began issuing prescriptions using the fictitious names of Donald Gram and Carol Jordan. Respondent testified that he was relieved when he was arrested.

According to Respondent, upon his arrest he contacted that Medical Board's Diversion Program and began attending diversion group meetings. However, Respondent was concerned that it could take several months to be formally admitted to the Diversion Program, so on December 4, 1997, he voluntarily entered a hospital in Oregon that offered a treatment program for addicted physicians. Respondent was an inpatient at the hospital until March 13, 1998.

While Respondent was in treatment, the medical director of the clinic where he was employed sent Respondent a letter advising him that the clinic intended to terminate his employment, but because he was participating in a professional assistance program, the clinic would indefinitely suspend his termination if he entered into a Last Chance Agreement with the clinic. Respondent agreed to the terms of this Last Chance Agreement which requires Respondent, among other things, to (1)

Submit to a minimum of two random urine tests each month; (2) notify the medical director in writing of any prescriptions he has filled at any pharmacy; (3) abstain from consuming any controlled or mood-altering substances; (4) provide a certificate from both the court-ordered and Medical Board diversion programs stating that he has begun and, when applicable, completed a treatment program; and (5) participate in the diversion programs' recommended aftercare program. Respondent also agreed that he would not order or accept any controlled substance samples and that the agreement would be in effect for four years from February 26, 1998. There was testimony at the hearing that Respondent has complied with this Last Chance Agreement.

The Associate Medical Director for Quality Management at the clinic where Respondent is employed testified that the Credentialing Committee reviewed approximately 50 randomly selected records of patients that Respondent treated in the three months prior to his arrest, between 50 and 100 controlled substance prescriptions issued by Respondent between 1996 and 1999, and 50 patient records for the three months after Respondent returned to work following his suspension. This review did not disclose any problems with Respondent's practice of medicine. Further, none of the staff who worked with Respondent perceived that he engaged in any impaired behavior or inappropriate prescribing of medications.

As of the date of the hearing, Respondent was still participating in the Medical Board's Diversion Program. He regularly attends diversion meetings and undergoes random urine tests three to four times a month, which have all been negative. The staff of the Diversion Program believes that Respondent can safely practice medicine.

The Administrator of the Medical Board's Diversion Program testified that in order to successfully complete the program a physician must have a minimum of three years of continuous sobriety or abstinence, and must have implemented lifestyle changes that are sufficient to maintain the physician's abstinence and recovery. The Administrator testified that because Respondent has not been abstinent for three years he cannot be considered to have successfully completed the Diversion Program, but if he maintains the lifestyle changes he has made and continues to be abstinent, he will complete the program.

Respondent is also monitored by the Wellness Committee of the hospital where he sees patients. In addition, Respondent's physician manager and workplace monitor testified that he randomly reviews patient records after Respondent sees a patient and he has found no problem with the quality of care provided by Respondent. Several supervisors and/or colleagues testified that Respondent practices competently, he has never appeared to be under the influence of any substance, and his rehabilitation is progressing well.

Respondent testified that he has not abused drugs since November 24, 1997. Respondent further testified that although he is not proud of his addiction, he is proud that he was honest with investigators, he sought help, he admitted his shortcomings, and he has a support group that monitors his recovery and ability to practice on a daily basis.

According to Respondent, he needs a DEA registration in order to effectively treat his patients and in order to maintain his employment since the Last Chance Agreement with his current employer requires him to have an unrestricted ability to practice medicine.

Pursuant to 21 U.S.C. 824(a)(2), the Deputy Administrator may revoke a DEA Certificate of Registration upon a finding that the registrant has been convicted of a felony relating to controlled substances under state or Federal law. It is undisputed that on March 9, 1998, Respondent pled nolo contender in state court to one felony count of obtaining hydrocodone by fraud. The court granted a deferred entry of judgment and the criminal proceedings were dismissed after Respondent completed criminal diversion program.

Respondent contends that he was not convicted of a felony offense since no judgment was entered against him and the criminal proceedings were dismissed. The Deputy Administrator agrees with Judge Bittner that Respondent has been convicted of a controlled substance related felony offense for purposes of these proceedings.

DEA has consistently held that a plea of nolo contendere constitutes a ''conviction'' within the meaning of 21 U.S.C. 824(a)(2). See Clinton D. Nutt, D.O., 55 FR 30,992 (1990); Eric A. Baum, M.D., 53 FR 47,272 (1988). Further, DEA has held that there is still a ''conviction'' within the meaning of the Controlled Substances Act even if the proceedings are later dismissed. The Deputy Administrator agrees with Judge Bittner that any other interpretation would mean that ''the conviction could only be considered between its date and the date of its subsequent dismissal * * * [which would be] inconsistent with holdings in other show cause cases that the passage of time since misconduct affects only the weight to be given the evidence'' citing Mark Binette, M.D., 64 FR 42,977, 42,980 (1999); Thomas H. McCarthy, D.O., 54 FR 20,938 (1989), aff'd No. 89–3496 (6th Cir. Apr. 5, 1990).

Therefore, since Respondent has been convicted of a felony relating to controlled substances, the Deputy Administrator finds that grounds exist to revoke Respondent's DEA Certificate of Registration pursuant to 21 U.S.C. 824(a)(2).

Also, pursuant to 21 U.S.C. 823(f) and 824(a)(4), the Deputy Administrator may revoke a DEA Certificate of Registration and deny any pending applications, if he determines that the continued registration would be inconsistent with the public interest. Section 823(f) requires that the following factors be considered in determining the public interest:

(1) The recommendation of the appropriate State licensing board or professional disciplinary authority.

(2) The applicant's experience in dispensing, or conducting research with respect to controlled substances.

(3) The applicant's conviction record under Federal or State laws relating to the manufacture, distribution, or dispensing of controlled substances.

(4) Compliance with applicable State, Federal, or local laws relating to controlled substances.

(5) Such other conduct which may threaten the public health and safety.

These factors are to be considered in the disjunctive; the Deputy Administrator may rely on any one or a combination of factors may give each factor the weight he deems appropriate in determining whether a registration should be revoked or an application for registration be denied. See Henry J. Schwarz, Jr., M.D., 54 FR 16,422 (1989).

Regarding factor one, it is undisputed that Respondent's license to practice medicine was suspended in December 1997. Subsequently the Medical Board filed an Accusation against Respondent and in March 1998, Respondent and the Medical Board entered into an Agreement in Lieu of Discipline wherein Respondent agreed to complete the Medical Board's Diversion Program. On April 9, 1998, the suspension order was modified to allow Respondent to return to the practice of medicine, but he was required to remain in the Diversion Program. No restrictions have been placed on Respondent's ability to handle controlled substances by the Medical Board. Therefore, Respondent

is authorized to practice medicine and handle controlled substances in California subject to his continued participation in the Medical Board's Diversion Program. But, as Judge Bittner stated, ''inasmuch as State licensure is a necessary but not sufficient condition for a DEA registration, * * * this factor is not determinative.''

As to factors two and four, Respondent's experience in handling controlled substances and his compliance with applicable laws, Respondent has admitted that he issued controlled substance prescriptions in fictitious names, took office samples of controlled substances, and used his authority over subordinates to obtain controlled substances. Clearly these actions violated 21 U.S.C. 843(a)(3) as well as California law. However, the Deputy Administrator finds that Respondents's behavior was motivated by his addiction to controlled substances for which he has since received extensive rehabilitative treatment.

As previously discussed, factor three is relevant since the Deputy Administrator finds that Respondent was convicted of a felony offense relating to controlled substances.

Regarding factor five, there is no question that Respondent abused controlled substances for several years prior to November 1997 when he was arrested. Particularly troubling to the Deputy Administrator is that Respondent abused these substances while performing his duties as a physician.

In light of Respondent's abuse of controlled substances, the methods he employed to obtain the drugs, and his felony conviction, the Deputy Administrator agrees with Judge Bittner that the Government has mad a prima facie case that Respondent's continued registration would be inconsistent with the public interest. Judge Bittner concluded however that while ''Respondent's misconduct was obliviously egregious[,]'' his testimony and that of his witnesses was credible ''that Respondent now understands the gravity of his actions and is remorseful, that he had been conscientious in pursuing his recovery, and that he has a support network, including appropriate monitoring at his workplace, to assist him in those efforts.''

Therefore, Judge Bittner recommended that Respondent be permitted to retain his DEA registration subject to the following restrictions:

1. For three years after issuance of a final order in this proceeding, Respondent shall not be employed as a physician with any entity that does not impose the same conditions on him that MedClinic imposed in the February 26, 1998, Last Chance Agreement.

2. Each calendar quarter, Respondent shall provide the Special Agent in Charge of the local DEA office (or that agent's designee) a list of all controlled substance prescriptions he has issued, including the patient's name and contact information, the name of the substance, the dosage form, strength, and quantity prescribed of the substance, and the number of refills authorized, if any.

The Deputy Administrator agrees with Judge Bittner that revocation of Respondent's DEA registration is not warranted. Respondent has accepted responsibility for his actions. He underwent extended inpatient treatment for his addiction, completed the court-ordered treatment program, and is still participating in the Medical Board's Diversion Program. His practice of medicine, as well as his continued recovery, is monitored by the Medical Board's Diversion Program, his employer through the Last Chance Agreement, and the hospital's Wellness Committee. However, the Deputy Administrator is troubled by the relatively short period of time that Respondent has been drug-free. Therefore, the Deputy Administrator concludes that additional restrictions should be imposed on Respondent's DEA Certificate of Registration in order to protect the public health and safety.

The Deputy Administrator concludes that Respondent's DEA Certificate of Registration should be continued subject to the following restrictions for three years from the effective date of this final order:

1. Respondent shall continue to participate in the Medical Board of California's Diversion Program regardless of whether the Medical Board authorizes the termination of his participation at an earlier date.

2. Respondent shall not practice medicine as a solo practitioner and he shall not be employed as a physician with any entity that does not impose the same conditions on him that MedClinic imposed in the February 26, 1998 Last Chance Agreement.

3. Upon request, Respondent shall submit copies of the results of his random urine screens to DEA.

4. Respondent shall not prescribe any controlled substances for himself or any immediate family member.

5. Each calendar quarter, Respondent shall provide to the Special Agent in Charge of the local DEA office, or his designee, a log of all controlled substances that he prescribes, dispenses or administers, including the patient's name and contact information, the name of the substance, the dosage form, strength and quantity prescribed, administered or dispensed, and the number of refills authorized on prescriptions, if any.

Accordingly, the Deputy Administrator of the Drug Enforcement Administration, pursuant to the authority vested in him by 21 U.S.C. 823 and 824 and 28 CFR 0.100(b) and 0.104, hereby orders that DEA Certificate of Registration BR1670012, previously issued to Edson W. Redard, M.D., be and it hereby is continued, subject to the above described restrictions. This order is effective June 12, 2000.

Dated: May 4, 2000.

Donnie R. Marshall,

Deputy Administrator.

[FR Doc. 00–11890 Filed 5–11–00; 8:45 am]

BILLING CODE 4410–09–M

DEPARTMENT OF JUSTICE

National Institute of Corrections

Solicitation for a Cooperative Agreement—Assessment of Institutional Culture

AGENCY: National Institute of Corrections, Department of Justice.

ACTION: Solicitation for a cooperative agreement.

SUMMARY: The Department of Justice (DOJ), National Institute of Corrections (NIC) announces the availability of funds in FY–2000 for a cooperative agreement to develop and document a methodology and process to assess institutional culture within prison settings.

Background

Beginning in 1996 the Prisons Division initiated a special emphasis on addressing staff sexual misconduct. NIC's approach to assisting agencies has included on-site technical assistance, training programs and dissemination of information. Throughout the extensive work with institutions in addressing staff sexual misconduct, consistent themes from correctional staff and the offender population underscore the importance of the institutional environment. Additional work at NIC in the area of mission change of institutions and the identification of the challenges of keeping an effective workforce also provide background for NIC's interest in institutional culture. Staff and inmate relations, consistent and fair supervisors, well trained staff, and strong institutional and agency

leadership teams are some of the components critical to a healthy environment highlighted by these projects. NIC's expanded interest in assessing institutional culture will be enhanced by this project's development of practical and data based assessment tools. The tools developed in this project to effectively assess an institution's culture will contribute to the next phase of NIC's strategic plan on Institutional Culture. These assessment tools will be used to develop strategic management plans for institutions that might include use of change agents, training and intensive assistance to influence or change an organization's culture.

Project Scope

The project on ''Assessment of Institutional Culture'' will provide for the development of methodology and a refinement of assessment tools for continuing NIC's ability to respond to correctional agencies in the critical area of institutional culture. The outcome of an institution specific cultural assessment process will provide critical information to correctional decision makers on managing complex dynamics within a prison environment.

The project objectives of this cooperative agreement are as follows:

- Conduct a review of work currently being managed within the NIC Prisons Division on staff sexual misconduct, mission change and prison workforce to more fully understand the assessment activities currently being used to assist agencies.
- Prepare a summary review of approaches being used by NIC, as well as other government and private organizations to assess cultural components or ''drivers'' of organizational or institutional culture. The review should include case examples with potential application to prison culture. Assessment components may include instrumentation, focus groups, on-site assessments and other cultural assessment tools. The review should include current thinking in the understanding of organizational culture and should recognize the complexity of collecting information in a custodial environment.
- Design a range of assessment tools/activities with suggested criteria for determining selection of these assessment activities based on possible presenting problems (e.g. increased institutional violence, high turnover, staff sexual misconduct) that are effective on an institutional level.
- Conduct on-site work at two facilities using recommended assessment tools. Facilities will be selected in consultation with NIC program manager.
- Develop a final report that documents the range of assessment tools or approaches with selection criteria or guidance for their use, documentation of the on-site work, and recommendations to NIC for further development of work in the area of institutional culture.

Specific Requirements

The successful applicant will propose a project approach that will ensure accomplishment of each of the stated objectives of this project. The applicant will assure that the project team offers technical expertise in the area of organizational or cultural assessment. The project design will reflect a prison based approach in understanding the application of current thinking in cultural assessment. Additional requirements include the following:

1. The selected applicant will be required to attend a preliminary meeting for the purposes of: an overview of current NIC work in the area of institutional culture; an overview of critical issues identified by practitioners; and a refinement of the project work plan.
2. Coordinate with NIC project director at critical points in the project.

Authority: Public Law 93–415

Funds Available

The award will be limited to $75,000 (direct and indirect costs) and project activity must be completed within 9 months of the date of award. The use of these funds does include the on-site work at two institutions and travel and per diem should be considered to accomplish these aspects of the project. Funds may not be used for construction, or to acquire or build real property. This project will be a collaborative venture with the NIC Prisons Division.

Application Requirements

Applications must prepare a proposal that defines their plan for meeting the goals and requirements of this project. They are expected to define the conceptual framework most appropriate and relevant and the methodology to be used in pursuing the project goals. In addition, they will identify a project staff in which all of the requisite skills are represented and who have made a commitment of time to the project. The proposal will demonstrate a practical and data based approach to effective assessment of institutional culture in prison settings.

Deadline for Receipt of Applications

Applications must be received by 4 pm on Wednesday, 6/28/00. They should be addressed to: Director, National Institute of Corrections, 320 First Street, NW, Room 5007, Washington, DC 20534. Hand delivered applications should be brought to 500 First Street, NW, Washington, DC 20534. The front desk will call Bobbi Tinsley at (202) 307–3106, extension 0 for pickup.

ADDRESSES AND FURTHER INFORMATION: Requests for the application kit, should be directed to Judy Evens, Cooperative Agreement Control Office, National Institute of Corrections, 320 First Street, NW, Room 5007, Washington, DC 20534 or by calling 800–995–6423, ext. 159, 202–307–3106, ext. 159, or e-mail: *jevens@bop.gov.* A copy of this announcement, application and forms may also be obtained through the NIC web site: *http://www.nicic.org* (click on ''What's New'' and ''Cooperative Agreements''). All technical and/or programmatic questions concerning this announcement should be directed to Andie Moss, Project Manager, at 320 First Street, NW, Room 5007, Washington, DC 20534 or by calling 800–995–6423, ext. 140, 202–307–3106, ext. 140, or e-mail: amoss@bop.gov.

Eligibility Applicants: An eligible applicant is any state or general unit of local government, public or private agency, educational institution, organization, team, or individual with the requisite skills to successfully meet the outcome objectives of the project.

Review Considerations: Applications received under this announcement will be subjected to an NIC 3 to 5 member Peer Review Process.

Number of Awards: One (1).

NIC Application Number: 00P07. This number should appear as a reference line in your cover letter and also in box 11 of Standard Form 424.

Executive Order 12372

This program is subject to the provisions of Executive Order 12372. Executive Order 12372 allows States the option of setting up a system for reviewing applications from within their States for assistance under certain Federal programs. Applicants (other than Federally-recognized Indian tribal governments) should contact their State Single Point of Contact (SPOC), a list of which is included in the application kit, along with further instructions on proposed projects serving more than one State.

(Catalog of Federal Domestic Assistance Number: 16.603)

Dated: May 8, 2000.

Morris L. Thigpen,

Director, National Institute of Corrections.

[FR Doc. 00–11897 Filed 5–11–00; 8:45 am]

BILLING CODE 4410–36–M

DEPARTMENT OF JUSTICE

National Institute of Corrections

Solicitation for a Cooperative Agreement—''Transition From Prison to the Community''

AGENCY: National Institute of Correction—Department of Justice.

ACTION: Solicitation for a cooperative agreement

SUMMARY: The Department of Justice (DOJ), National Institute of Corrections (NIC) announces the availability of funds in FY 2000 for a cooperative agreement to initiate the project ''Transition from Prison to the Community.'' NIC will make a multi-year award based on funding being available in the subsequent years to develop a coordinated approach to effectively transition offenders from prison to the community.

A cooperative agreement is a form of assistance relationship where NIC is substantially involved during the performance of the award. An award is made to an organization who will, in concert with NIC, identify the method and approach in developing a transition program.

Background

Return to prison is the sanction of choice by releasing authorities for offenders who violate the conditions of their release. It is estimated that approximately 35 to 40% of new admissions to state correctional facilities are the results of violations while under parole supervision. Many violations are generally technical in nature and a significant number are attributable to incomplete and/or inadequate release planning, imposition of unrealistic rules and ineffective case management. It is believed that through a systematic approach to planning, the transition from prison to the community can be managed more effectively, resulting in a greater opportunity for successful community reintegration as measured by a reduction in the reincarceration of released offenders under community supervision.

It is essential to coordinate the activities of the three (3) principal entities involved in the custody, release and supervision of offenders. Those key organizations are the state correctional institutions, the states releasing authority and the community supervision agency. The proper identification of the released population participating in the transition process, must be established through clear articulated criteria. The use of a dynamic assessment tool(s) to assist in identifying the risks and needs of the targeted offender population will be required. The instrument should assist in the development of institutional programs, pre-release plans and community supervisions strategies, in-order to address the specific risk(s) and need(s) of the individual offender.

Purpose

The purpose of this initiative is to establish through organizational policy and procedure a model approach for the transitioning of offenders from prison to the community. The model will bring together the prison administration, the releasing authority for the jurisdiction and the community supervision component for joint development of policies and procedures affecting the custody, release and supervision of offenders targeted for the transition initiative. The model should include an assessment tool(s) that is dynamic in nature to address programming and supervision requirements.

Objectives:

- To utilize the research and relevant literature regarding best practices in effective intervention and what works.
- To utilize an assessment tool that is dynamic in nature.
- To formalize a model of operating policies, across multiple agencies, for the transition process.
- To increase the effectiveness and efficiency for each organization involved in the transition process.
- To develop a monograph upon completion of the project, providing an overview of the process.

Application Requirement

Applicants must prepare a proposal that describes their plan to meet the projects objectives which should include a schedule identifying benchmarks of significant tasks in chart form. Applicants must identify their key project staff and the relevant expertise of each.

The proposal should address the following areas:

- Targeting population for release
- Assessment tools
- Relapse prevention and intervention strategies
- Range of alternative sanctions
- Individual intervention plans
- Case management method
- Community aftercare

Authority: Public Law 93–415

Funds Available

The award will be limited to a maximum of $250,000 (direct and indirect costs). Funds may only be used for the activities that are linked to the desired outcome of the project. No funds are transferred to state or local governments. This project will be a collaborative venture with the NIC Community Corrections Division.

Deadline For Receipt of Applications: Applicant must be received by 4 P.M. Eastern Time on June 30, 2000.

ADDRESSES AND FURTHER INFORMATION: Request for the application kit should be directed to Judy Evens, Cooperative Agreement Control Office, National Institute of Corrections, 320 First Street, NW, Room 5007, Washington, D.C. 20534 or by calling (800) 995–6423, extension 159 or (202) 307–3106, extension 159. She can also be contacted by E-mail via *jevens@bop.gov.* All technical and or programmatic questions concerning this announcement should be directed to Cranston J. Mitchell at the above address or by calling (800) 995–6423, extension 153 or (202) 307–3106, extension 153, or by E-mail via *cjmitchell&bop.gov.* Applicant forms may be also be obtained through the NIC web site: *http://www.nicic.org* (click on '' What's New''and ''Cooperative Agreements'').

Mailed and express delivery applications should be sent to: National Institute of Corrections, 320 First Street, NW, Room 5007, Washington, D.C. 20534. Hand delivery should be marked 500 First Street NW. The front desk will cal Bobbi Tinsley(307–3106 and press 0) to come to the desk for pickup.

Eligible Applicants: An eligible applicant is any State or general unit of local government, public or private agency, educational institution, organization, team or individual with the required skills to successfully meet the outcome objectives of the project.

Review Considerations: Applications received under this announcement will be subjected to an NIC three to five member Peer Review Process.

Number of Awards: One (1)

NIC Application Number: 00C06. This number should appear as a reference line in the cover letter and also in box 11 of Standard Form 424.

Executive Order 12372

This program is subject to the provisions of Executive Order 12372. Executive Order 12372 allows States the option of setting up a system for reviewing applications from within their States for assistance under certain

Federal programs. Applicants (other than Federally-recognized Indian tribal governments) should contact their State Single Point of Contact (SPOC), a list of which is included in the application Kit, along with further instructions on proposed projects serving more than one State.

The Catalog of Federal Domestic Assistance number is: 16.603

Dated: May 5, 2000.

Morris L. Thigpen,

Director, National Institute of Corrections.

[FR Doc. 00–11898 Filed 5–11–00; 8:45 am]

BILLING CODE 4410–36–M

DEPARTMENT OF JUSTICE

Bureau of Prisons

Notice of Cancellation of the Programmatic Environmental Impact Statement for Housing the Criminal Alien Population in Non-Federal Low-Security Correctional Facilities

AGENCY: U.S. Department of Justice Bureau of Prisons.

ACTION: Notice of cancellation of the programmatic environmental impact statement.

SUMMARY:

Proposed Action

The mission of the Federal Bureau of Prisons (Bureau) is to protect society by confining offenders in the controlled environments of prison and community-based facilities that are safe, humane, cost-efficient, and appropriately secure, and that provide work and other self-improvement opportunities to assist offenders in becoming law-abiding citizens. In addition, the Bureau supports the U.S. Marshals Service in its efforts to house the growing number of unsentenced Federal detainees, and the Immigration and Naturalization Service in the rapidly increasing requirements for the detention of sentenced and unsentenced aliens awaiting hearings and/or release or repatriation to their country of origination. The Bureau accomplishes its mission through the appropriate use of community correction, detention, and correctional facilities that are either: Federally-owned and operated; Federally-owned and non-Federally operated; and non-Federally owned and operated.

The Bureau is facing a period of unprecedented growth in its inmate population. Projections show the federal inmate population increasing from approximately 120,000 inmates to 205,000 inmates by 2007. As such, the demand for bed space within the federal prison system will continue to grow at a significant rate. A portion of this growth is the result of programs implemented by the Immigration and Naturalization Service regarding sentenced and unsentenced aliens. Correctional institutions at the low security level will be impacted immediately because sentenced and unsentenced aliens are typically housed at the low security level. Due to the current shortage of beds, especially at the low security level, the Bureau has been forced to manage its population by designating minimum and medium security level institutions as low security institutions which, in turn, creates a domino effect for all other security levels. The projected population of sentenced and unsentenced aliens will only exacerbate these population pressures.

Over the past several years, the Bureau has sought flexibility in managing the shortage of beds in the low security level as well as the anticipated sharp and/or short-term increases at this security level. Such management flexibility would have to meet population capacity needs in a timely fashion, comport with federal law, and maintain fiscal responsibility, all while successfully attaining the mission of the Bureau. Management flexibility includes the appropriate contracting of non-federal correctional facilities.

To ensure compliance with the National Environmental Policy Act of 1969, 42 U.S.C. 4321 (NEPA) as amended, the Bureau initiated preparation of a Draft Programmatic Environmental Impact Statement in April 1999. The Draft Programmatic Environmental Impact Statement was intended to identify and analyze potential impacts to the natural and manmade environments resulting from use of non-federal correctional facilities to house the criminal alien population. Topics to be studied as part of the Draft Programmatic Environmental Impact Statement include: topography, geology/soils, hydrology, biological resources, utility services, transportation services, cultural resources, land uses, social and economic factors, hazardous materials, air and noise quality, among others. As part of that effort, the Bureau hosted Scoping Meetings to afford the public, regulatory agency representatives, and elected officials an opportunity to learn about and voice their interests and concerns regarding the use of private contract correctional facilities and the Draft Programmatic EIS effort. The Scoping Meetings were held on April 29, 1999 Philadelphia, Pennsylvania; May 4, 1999 in Dallas, Texas; and May 6, 1999 in San Diego, California and were attended by interested members of the public.

While preparing the Draft Programmatic EIS, the Bureau reviewed its environmental compliance policies and procedures for the CAR program and has decided to pursue alternative arrangements for complying with NEPA. More specifically, the Bureau determined that evaluating the development of Federal and contract correctional facilities was best performed on a case-by-case basis. An individualized approach to project evaluation carries with it the advantages of site-specific evaluations, greater public participation, and tailored mitigation plans. As a result, the Bureau has decided to cancel the Programmatic EIS and instead concentrate its efforts and resources at preparing individual, site-specific Environmental Impact Statements for facilities proposed to house the criminal alien population.

ADDRESSES: Questions concerning this matter may be directed to: David J. Dorworth, Chief, Site Selection and Environmental Review Branch, U.S. Department of Justice, Federal Bureau of Prisons, 320 First Street, N.W., Washington, D.C. 20534, Telephone: 202–514–6470, Facsimile: 202–616–6024, e-mail: siteselection@bop.gov.

Dated: May 5, 2000.

David J. Dorworth,

Chief, Site Selection & Environmental Review Branch.

[FR Doc. 00–11789 Filed 5–11–00; 8:45 am]

BILLING CODE 4410–05–P

DEPARTMENT OF JUSTICE

Bureau of Prisons

Notice of Intent To Prepare a Draft Environmental Impact Statement (DEIS) for Development of a Medium-Security Federal Correctional Institution in Pennsylvania

AGENCY: Bureau of Prisons, U.S. Department of Justice.

ACTION: Notice of intent to prepare a Draft Environmental Impact Statement (DEIS).

SUMMARY:

Proposed Action

The mission of the United States Department of Justice, Federal Bureau of Prisons is to protect society by confining offenders in the controlled environments of prison and community-based facilities that are safe, humane, cost-efficient, and appropriately secure, and that provide work and other self-

improvement opportunities to assist offenders in becoming law-abiding citizens. The Bureau accomplishes its mission through the appropriate use of community correction, detention, and correctional facilities that are either: Federally-owned and operated; Federally-owned and non-Federally operated; and non-Federally owned and operated.

The Bureau is facing a period of unprecedented growth in its inmate population. Projections show the federal inmate population increasing from approximately 120,000 inmates to 205,000 inmates by 2007. As such, the demand for bedspace within the federal prison system will continue to grow at a significant rate. To accommodate a portion of the growing inmate population, the Bureau of Prisons has determined that an additional medium-security Federal Correctional Institution (FCI) is needed in its system. Therefore, the Bureau of Prisons is proposes to build and operate a medium-security federal correctional facility, with an adjacent minimum-security satellite camp, in Pennsylvania. The main medium-security facility would provide habitation for approximately 1,200 inmates, with an additional 150–300 inmates to be housed at the minimum-security satellite camp.

Several sites in Northumberland County, Pennsylvania have been offered to the Bureau for consideration in developing the medium-security FCI and satellite camp. The Bureau of Prisons has preliminarily evaluated these sites and determined that the prospective sites appear to be of sufficient size to provide space for housing, programs, administrative services and other support facilities associated with the correctional facility. The DEIS to be prepared by the Bureau will analyzed the potential impacts of correctional facility construction and operation at these sites.

The Process

In the process of evaluating the sites, several aspects will receive detailed examination including, but are not limited to: topography, geology/soils, hydrology, biological resources, utility services, transportation services, cultural resources, land uses, socio-economics, hazardous materials, air and noise quality, among others.

Alternatives

In developing the DEIS, the options of ''no action'' and ''alternative sites'' for the proposed facility will be fully and thoroughly examined.

Scoping Process

During the preparation of the DEIS, there will be opportunities for public involvement in order to determine the issues to be examined. A public Scoping Meeting will be held at 7 P.M., May 31, 2000 at the Northumberland County Career & Arts Center located at 2 East Arch Street, Shamokin, Pennsylvania. The meeting location, date, and time will be well publicized and has been arranged to allow for the public as well as interested agencies and organizations to attend. The meeting is being held to allow interested persons to formally express their views on the scope and significant issues to be studied as part of the DEIS process. The Scoping Meeting is being held to provide for timely public comments and understanding of federal plans and programs with possible environmental consequences as required by the National Environmental Policy Act of 1969, as amended, and the National Historic Preservation Act of 1966, as amended. In addition, public information meetings have been held in Northumberland County by representatives of the Bureau of Prisons with interested citizens, elected officials, and community leaders.

DEIS Preparation

Public notice will be given concerning the availability of the DEIS for public review and comment.

Addresses

Questions concerning the proposed action and the DEIS may be directed to: David J. Dorworth, Chief, Site Selection and Environmental Review Branch, Federal Bureau of Prisons, 320 First Street, NW., Washington, D.C. 20534, Telephone (202) 514–6470, Telefacsimile (202) 616–6024, E-Mail: siteselection@bop.gov.

Dated: May 5, 2000.

David J. Dorworth,

Chief, Site Selection and Environmental Review Branch.

[FR Doc. 00–11788 Filed 5–11–00; 8:45 am]

BILLING CODE 4410–05–P

DEPARTMENT OF LABOR

Employment and Training Administration

Notice of Availability of Funds and Solicitation for Grant Applications (SGAs) for the Purpose of Training Child Care Providers

SUMMARY: *This notice contains all of the necessary information and forms needed to apply for grant funding.* The Department of Labor, Employment and Training Administration, Bureau of Apprenticeship and Training, invites proposals for approximately ten (10) awards for the implementation of the Quality Child Care Initiative. It will assist with the initiation of building a national system for the education and training of professional child care providers and expand the National Apprenticeship System by incorporating diversification of occupational entities through development of new and innovative strategies for increasing the participation among the child care industry.

DATES: Applications will be accepted commencing on the date of publication. The closing date for receipt of applications is July 12, 2000, at 4 P.M., (Eastern Time) at the address below. *Telefacsimile (FAX),* Ttelegraphed, or Electronic Applications will not be honored.

ADDRESSES: Applications shall be mailed to the U.S. Department of Labor, Employment and Training Administration, Division of Federal Assistance, Attention: Reda Harrison, Reference: SGA/DFA 00–106, 200 Constitution Avenue, NW, Room S–4203, Washington, DC 20210.

FOR FURTHER INFORMATION: Questions should be faxed to Reda Harrison, Grants Management Specialist, Division of Federal Assistance, Fax 202–219–8739. This is not a toll-free number. All inquiries should include the SGA number (DFA 00–106) a contact name, fax and phone numbers. This solicitation will also be published on the Internet on the Employment and Training Administration's Home Page at http://www.doleta.gov. Award notifications will also be published on this Home Page.

Quality Child Care Initiative Solicitation

I. Purpose

To invite proposals for providing a credentialed career path for development of professional child care providers through the utilization of the National Registered Apprenticeship System; which will reduce turnover, increase wages for providers, provide a more stable environment for children and lower the concern of parents.

II. Background

The Child Care Industry is in trouble. A 1989 study by the National Center of Early Childhood Workforce found that the quality of services provided by most day care centers was rated as ''barely

adequate,'' and a more recent four-State study by the University of Colorado, at Denver, found that only 14 percent of child care centers were rated as good quality. In addition, child care workers are faced with relatively low wages, inadequate benefit coverage and high job turnover.

On October 23, 1997, President and Mrs. Clinton hosted the White House Conference on Child Care to focus the Nation's attention on the importance of addressing the need for safe, affordable, available and quality child care. Integral to providing the ''right'' care is the quality of the child care worker.

Quality child care service goes hand in glove with having an adequate supply of competent, professional child care providers. This requires enhanced training opportunities and a redefinition of the basic concept of what constitutes a child care provider. A national focus on accreditation demands that practitioners have access to education and training that will promote professional development. As the field of early care and education becomes established as a profession, practitioners are required to master basic knowledge, skills and core competencies of early childhood development. As professionals, practitioners must develop practical knowledge that will enable them to apply new approaches and strategies for working effectively with young children.

III. Statement of Work

As our society continues to evolve and demands are placed on parents to secure full time job/careers, the need for safe, affordable, available and quality child care has been brought to the forefront. Utilization of the National Apprenticeship System can provide needed training for early care and education practitioners. High quality training has the potential to change the culture of the child care industry from one dominated by low pay and high turnover to one of respected professional service. No longer would child care be equated to baby-sitting.

The apprenticeship model validates the integral part that child care plays in the economy, as working families rely on dependable, accessible care for their children. As families move from welfare to work, additional sources of training child care providers are in demand.

Note: All applicants are expected to provide information relative to the projected number of participants (*i.e.,* employers, apprentices and the diverse make-up of the participants).

The major tasks of this project will be, but not limited, to the following:

- System and capacity-building by incorporating in a collaborative spirit organizations, agencies, employers, associations and higher education (*i.e.,* State Child Care Association, State Head Start Association, State Early Childhood Professional Associations , School Age Care, Black Child Development Institution, State Family Child Care Associations, State Head Start Collaboration Directors, Post Secondary Institutions, Child Care Resource and Referral Agencies, Registered Apprenticeship Representative), to develop a vision for implementation of an individual statewide sustainable infrastructure built upon successful registered apprenticeship and best practice models;
- From the above activity, establishment of an oversight body to provide direction and guidance to the vision, utilizing the services of an Apprenticeship and Training Representative.
- Utilization of an established curriculum or development of a curriculum based on developmentally appropriate inclusive practices for young children and an interactive adult education teaching approach that is effective for adult learners.
- Adoption of or establishment of a train-the-trainer system that will ensure the availability of knowledgeable, experienced, skilled instructors for the related instruction course work;
- Development of a process to promote career lattice for those graduates of the registered apprenticeship system (*i.e.,* articulation into an Associates Degree or higher);
- Ensuring the inclusion of those with other nationally recognized credentials such as the Child Development Associate (CDA) through previous credit for documented prior experience;
- Demonstration of in-kind support from institutions involved in the process (*i.e.,* time spent to facilitate and foster the process and/or free facilities to conduct related instruction);
- Development and implementation of a strategy or strategies to ensure inclusion of practitioners representing diversity of culture, ethnicity, gender and ability;
- Development of policies, procedures and formulas to ensure the consistency and integrity of system implementation and beyond. The system will be sustainable and ownership established, if the process is followed throughout the state.

IV. Application Process

Eligible Applicants: Those eligible to apply are as follows: States that have a State Apprenticeship Agency (SAA); State Agencies designated by the Governor; Governor's Early Childhood Initiative; and other State Agencies with responsibility for child care regulations or funding. *Only one proposal will be accepted per State; and for States without an SAA, a letter from the Governor designating the agency must accompany the proposal. Those awardees who received Child Care Initiative awards in 1999 are not eligible to compete for this procurement.*

V. Application Submittal

Applicants must submit four (4) copies of their proposal, with original signatures. The application shall be divided into two distinct parts: Part I—which contains Standard Form (SF) 424, ''Application for Federal Assistance,'' (Appendix A) and ''Budget Information Sheet,'' (Appendix B). All copies of the SF 424 MUST have original signatures of the legal entity applying for grant funding. Applicants shall indicate on the SF 424 the organization's IRS Status, if applicable. According to the Lobbying Disclosure Act of 1995, Section 18, an organization described in Section 501(c) 4 of the Internal Revenue Code of 1986 which engages in lobbying activities shall not be eligible for the receipt of federal funds constituting an award, grant, or loan. The Catalog of Federal Domestic Assistance (CFDA) number is 17.249. In addition, the budget shall include—on a separate page(s)—a detailed cost break-out of each line item on the Budget Information Sheet. Part II shall contain the program narrative that demonstrates the applicant's plan and capabilities in accordance with the evaluation criteria contained in this section. Applicants must describe their plan in light of each of the Evaluation Criteria. Applicants MUST limit the program narrative section to no more than 30 double-spaced pages, on one side only. *This includes any attachments.* Applications that fail to meet the page limitation requirement will not be considered.

VI. Late Applications

Any application received after the exact date and time specified for receipt at the office designated in this notice will not be considered, unless it is received before awards are made and it—(a) was sent by U.S. Postal Service registered or certified mail not later than the fifth calendar day before the date specified for receipt of applications (*e.g.*, an application submitted in response to a solicitation requiring receipt of applications by the 20th of the month must have been mailed/post marked by the 15th of that month); or

(b) was sent by the U.S. Postal Service Express Mail Next Day Service to addressee not later than 5 P.M. at the place of mailing two working days prior to the date specified for receipt of applications. The term ''working days'' excludes weekends and Federal holidays. ''Post-marked'' means a printed, stamped or otherwise placed impression (exclusive of a postage meter machine impression) that is readily identifiable, without further action, as having been supplied or affixed on the date of mailing by an employee of the U.S. Postal Service.

VII. Withdrawal of Applications

Applications may be withdrawn by written notice or telegram (including mail gram) received at any time before an award is made. Applications may be withdrawn in person by the applicant or by an authorized representative thereof, the representative's identity is made known and representative signs a receipt of the proposal.

VIII. Hand Delivered Proposals

It is preferred that applications be mailed at least five days prior to the closing date. To be considered for funding, hand-delivered applications must be received by 4 P.M., (Eastern Time), July 12, 2000, at the specified address. Failure to adhere to the above instructions will be a basis for a determination of nonresponsiveness. Overnight express mail from carriers other than the U.S. Postal Service will be considered hand-delivered applications and *must be received* by the above specified date and time.

IX. Funding Availability and Period of Performance

The Department expects to make up to 10 awards with a maximum total investment for these projects of $3.5 million. The estimated range of awards is to be from $175,000 to $350,000. The period of performance will be for 18 months from the date of execution.

X. Review Process

A careful evaluation of applications will be made by a technical review panel who will evaluate the applications against the criteria listed below. The panel results are advisory in nature and not binding on the Grant Officer. The Government may elect to award the grant with or without discussions with the offeror. In situations without discussions, an award will be based on the offeror's signature on the SF 424, which constitutes a binding offer. Those awards made will be in the best interests of the Government.

Evaluation Criteria

A. System and Capacity Building—The extent to which the offeror has delineated collaboration strategies to develop a vision and implementation plan for a statewide infrastructure utilizing the registered apprenticeship system of training and forecast of implementation. (25 points)

B. Sustainability—Plan for long term viability of the system after this funding ends. (15 points)

C. Curriculum—Delineation of utilization or development of curriculum based on developmentally appropriate inclusive practices for young children and an interactive adult educational component for effective adult learners and a forecast of implementation. (15 points)

D. Career Lattice—Describe the process for inclusion of participants with documented prior experience linked with substantial increases in compensation and next steps for apprenticeship graduates in the process (awarding of college credit and articulation with higher education). (20 points)

E. Diversity—Outline the strategy or strategies developed to ensure inclusion of participants representing diversity of culture, ethnicity, gender and ability (*i.e.*, projected number of employers and apprentices) and a forecast of implementation. (15 points)

F. Consistency and Integrity—Delineation of the policies, procedures, and formulas developed to ensure consistency and integrity of the statewide system. (10 points)

XI. Reporting Requirements

- Attendance to a post award orientation briefing (*i.e.,* time and place to be announced), where BAT will reiterate and delineate the overall desired outcomes of the project;
- Detailed work plan, budget, and schedule within 30 days of grant award;
- Quarterly Status Reports within 30 days of quarters end;
- Monthly cost vouchers;
- Final report on completed tasks and specific recommendations for future grants for Child Care Initiatives, no later than 45 days following the end of the grant.

Signed in Washington, DC, the 5th of May, 2000.

Laura A. Cesario,

Grant Officer, Division of Federal Assistance.

BILLING CODE 4510–30–P

APPENDIX A

APPLICATION FOR FEDERAL ASSISTANCE

OMB Approval No. 0348-0043

2. DATE SUBMITTED	Applicant Identifier	
3. DATE RECEIVED BY STATE	State Application Identifier	
4. DATE RECEIVED BY FEDERAL AGENCY	Federal Identifier	

1. TYPE OF SUBMISSION:
Application ☐ Construction ☐ Non-Construction
Preapplication ☐ Construction ☐ Non-Construction

5. APPLICANT INFORMATION

Legal Name:	Organizational Unit:
Address (give city, county, State and zip code):	Name and telephone number of the person to be contacted on matters involving this application (give area code):

6. EMPLOYER IDENTIFICATION NUMBER (EIN):
☐☐-☐☐☐☐☐☐☐

7. TYPE OF APPLICANT: (enter appropriate letter in box) ☐

A. State
B. County
C. Municipa
D. Township
E. Interstate
F. Intermunicipal
G. Special District
H Independent School Dist.
I State Controlled Institution of Higher Learning
J . Private University
K Indian Tribe
L. Individual
M. Profit Organization
N. Other (Specify): _____

8. TYPE OF APPLICATION:
☐ New ☐ Continuation ☐ Revision

If Revision, enter appropriate letter(s) in box(es): ☐ ☐
A. Increase Award B. Decrease Award C. Increase Duration
D. Decrease Duration Other (specify):
_____

9. NAME OF FEDERAL AGENCY:

10. CATALOG OF FEDERAL DOMESTIC ASSISTANCE NUMBER:
☐☐-☐☐☐
TITLE:

11. DESCRIPTIVE TITLE OF APPLICANT'S PROJECT:

12. AREAS AFFECTED BY PROJECT (cities, counties, States, etc.):

13. PROPOSED PROJECT:		14. CONGRESSIONAL DISTRICTS OF:	
Start Date	Ending Date	a. Applicant	b. Project

15. ESTIMATED FUNDING:		
a. Federal	$	.00
b. Applicant	$	.00
c. State	$	.00
d. Local	$	.00
e. Other	$	.00
f. Program Income	$	.00
g. TOTAL	$	.00

16. IS APPLICATION SUBJECT TO REVIEW BY STATE EXECUTIVE ORDER 12372 PROCESS?
a. YES. THIS PREAPPLICATION/APPLICATION WAS MADE AVAILABLE TO THE STATE EXECUTIVE ORDER 12372 PROCESS FOR REVIEW ON
DATE _____
b. NO. ☐ PROGRAM IS NOT COVERED BY E.O. 12372
☐ OR PROGRAM HAS NOT BEEN SELECTED BY STATE FOR REVIEW

17. IS THE APPLICANT DELINQUENT ON ANY FEDERAL DEBT?
☐ Yes If "Yes," attach an explanation. ☐ No

18. TO THE BEST OF MY KNOWLEDGE AND BELIEF, ALL DATA IN THIS APPLICATION/PREAPPLICATION ARE TRUE AND CORRECT. THE DOCUMENT HAS BEEN DULY AUTHORIZED BY THE GOVERNING BODY OF THE APPLICANT AND THE APPLICANT WILL COMPLY WITH THE ATTACHED ASSURANCES IF THE ASSISTANCE IS AWARDED.

a. Typed Name of Authorized Representative	b. Title	c. Telephone number
d. Signature of Authorized Representative		e. Date Signed

Previous Editions Not Usable

Standard Form 424 (REV 4-88)
Prescribed by OMB Circular A-102

Authorized for Local Reproduction

INSTRUCTIONS FOR THE SF 424

This is a standard form used by applicants as a required face sheet for preapplications and applications submitted for Federal assistance. It will be used by Federal agencies to obtain applicant certification that States which ave established a review and comment procedure in response to Executive Order 12372 and have selected the program to be included in their process, have been given an opportunity to review the applicant's submission.

Item:	Entry:
1.	Self-explanatory.
2.	Date application submitted to Federal agency (or State if applicable) & applicant's control number (if applicable).
3.	State use only (if applicable)
4.	If this application is to continue or revise an existing award, enter present Federal identifier number. If for a new project, leave blank.
5.	Legal name of applicant, name of primary organizational unit which will undertake this assistance activity, complete address of the applicant, and name and telephone number of the person to contact on matters related to this application.
6.	Enter Employer Identification Number (EIN) as assigned by the Internal Revenue Service.
7.	Enter the appropriate letter in the space provided.
8.	Check appropriate box and enter appropriate letter(s) in the space(s) provided. - "New" means a new assistance award. - "Continuation" means an extension for an additional funding/budget period for a project with a projected completion date. - "Revision" means any change in the Federal Government's financial obligation or contingent liability from an existing obligation.
9.	Name of Federal agency from which assistance is being requested with this application.
10.	Use the Catalog of Federal Domestic Assistance number and title of the program under which assistance is required.
11.	Enter a brief descriptive title of the project. If more than one program is involved, you should append an explanation on a separate sheet. If appropriate (e.g., construction or real property projects), attach a map showing project location. For preapplications, use a separate sheet to provide a summary description of the project.

Item:	Entry:
12.	List only the largest political entities affected (e.g., State, counties, cities.
13.	Self-explanatory.
14.	List the applicant's Congressional District and any District(s) affected by the program or project.
15.	Amount requested or to be contributed during the first funding/budget period by each contributor. Value of in-kind contributions should be included on appropriate lines as applicable. If the action will result in a dollar change to an existing award, indicate only the amount of the change. For decreases, enclose the amounts in parentheses. If both basic and supplemental amounts are included, show breakdown on an attached sheet. For multiple program funding, use totals and show breakdown using same categories as item 15.
16.	Applicants should contact the State Single Point of Contact (SPOC) for Federal Executive Order 12372 to determine whether the application is subject to the State intergovernmental review process.
17.	This question applies to the applicant organization, not the person who signs as the authorized representative. Categories of debt include delinquent audit disallowances, loans and taxes.
18.	To be signed by the authorized representative of the applicant. A copy of the governing body's authorization for you to sign this application as official representative must be on file in the applicant's office. (Certain Federal agencies may require that this authorization be submitted as part of the application.)

APPENDIX B ***PART II - BUDGET INFORMATION***

SECTION A - Budget Summary by Categories

	(A)	*(B)*	*©)*
1. Personnel			
2. Fringe Benefits (Rate)			
3. Travel			
4. Equipment			
5. Supplies			
6. Contractual			
7. Other			
8. Total, Direct Cost (Lines 1 through 7)			
9. Indirect Cost (Rate %)			
10. Training Cost/Stipends			
11. TOTAL Funds Requested (Lines 8 through 10)			

SECTION B - Cost Sharing/ Match Summary (if appropriate)

	(A)	*(B)*	*(C)*
1. Cash Contribution			
2. In-Kind Contribution			
3. TOTAL Cost Sharing / Match (Rate %)			

NOTE: ***Use Column A to record funds requested for the initial period of performance (i.e. 12 months, 18 months, etc.); Column B to record changes to Column A (i.e. requests for additional funds or line item changes; and Column C to record the totals (A plus B).***

SECTION A - Budget Summary by Categories

1. ***Personnel:*** *Show salaries to be paid for project personnel which you are required to provide with W2 forms.*

2. ***Fringe Benefits****: Indicate the rate and amount of fringe benefits.*

3. ***Travel****: Indicate the amount requested for staff travel. Include funds to cover at least one trip to Washington, DC for project director or designee.*

4. ***Equipment****: Indicate the cost of non-expendable personal property that has a useful life of more than one year with a per unit cost of $5,000 or more. Also include a detailed description of equipment to be purchased including price information.*

5. ***Supplies****: Include the cost of consumable supplies and materials to be used during the project period.*

6. ***Contractual****: Show the amount to be used for (1) procurement contracts (except those which belong on other lines such as supplies and equipment); and (2) sub-contracts/grants.*

7. ***Other****: Indicate all direct costs not clearly covered by lines 1 through 6 above, including consultants.*

8. ***Total, Direct Costs****: Add lines 1 through 7.*

9. ***Indirect Costs****: Indicate the rate and amount of indirect costs. Please include a copy of your negotiated Indirect Cost Agreement.*

10. ***Training /Stipend Cost:*** *(If allowable)*

11. ***Total Federal funds Requested****: Show total of lines 8 through 10.*

SECTION B - Cost Sharing/Matching Summary

Indicate the actual rate and amount of cost sharing/matching when there is a cost sharing/matching requirement. Also include percentage of total project cost and indicate source of cost sharing/matching funds, i.e. other Federal source or other Non-Federal source.

NOTE:

PLEASE INCLUDE A DETAILED COST ANALYSIS OF EACH LINE ITEM.

[FR Doc. 00–11977 Filed 5–11–00; 8:45 am]
BILLING CODE 4510–30–C

DEPARTMENT OF LABOR

Employment and Training Administration

Workforce Investment Act; Lower Living Standard Income Level

AGENCY: Employment and Training Administration, Labor.

ACTION: Notice of determination of lower living standard income level.

SUMMARY: Under Title I of the Workforce Investment Act (Pub. L. 105–220), the Secretary of Labor annually determines the Lower Living Standard Income Level (LLSIL) for uses defined in the Law. WIA defines the term ''Low Income Individual'' as one who qualifies under various criteria, including an individual who received income that does not exceed the higher of the poverty line or 70 percent of the lower living standard income level. This issuance provides the Secretary's annual LLSIL for 2000 and references the current 2000 Health and Human Services ''Poverty Guidelines.''

EFFECTIVE DATE: This notice is effective on May 12, 2000.

ADDRESSES: Send written comments to: Mr. Ron Putz, Office of Adult Services, Employment and Training Administration, Department of Labor, Room N–4671, 200 Constitution Avenue NW., Washington, DC 20210.

FOR FURTHER INFORMATION CONTACT: Mr. Ron Putz, Telephone 202–219–7694 x134; Fax (202) 219–0376 (these are not toll free numbers).

SUPPLEMENTARY INFORMATION: The purpose of the Workforce Investment Act (WIA) is ''to provide workforce investment activities, through statewide and local workforce investment systems, that increase the employment, retention, and earnings of participants, and increase occupational skill attainment by participants, and, as a result, improve the quality of the workforce, reduce welfare dependency, and enhance the productivity and competitiveness of the Nation.''

The LLSIL is used for several purposes under WIA: specifically, WIA Section 101(25) defines the term ''low income individual for eligibility purposes'' Sections 127(b)(2)(C) and 132(b)(1)(iii)(IV) define the terms ''disadvantaged adult,'' and ''disadvantaged youth'' in terms of the poverty line or LLSIL for purposes of State allotments. The Governor and State/local Workforce Investment Boards need the LLSIL for determining eligibility for youth, eligibility for employed adult/dislocated workers for certain services, and for the reauthorized Work Opportunity Tax Credit (WOTC). We encourage the Governors and State/local Workforce Investment Boards to consult WIA and its Regulations and Preamble for more specific guidance in applying the LLSIL to program requirements. The Department of Health and Human Services published the annual update of the poverty-level guidelines in the **Federal Register** at 65, FR 7555, (Feb. 15, 2000). The HHS poverty-level guidelines may also be found on the Internet at *http://aspe.hhs.gov/poverty/00.htm.* ETA plans to have the 2000 LLSIL available on its website at: http://www.wdsc.org/llsil/llsil00.htm.

WIA section 101(24) defines the LLSIL as ''that income level (adjusted for regional, metropolitan, urban, and rural differences and family size) determined annually by the Secretary (of Labor) based on the most recent lower living family budget issued by the Secretary.'' The most recent lower living family budget was issued by the Secretary of Labor in the fall of 1981. The four-person urban family budget estimates, previously published by the Bureau of Labor Statistics (BLS), provided the basis for the Secretary to determine the LLSIL. BLS terminated the four-person family budget series in 1982, after publication of the Fall 1981 estimates. Currently BLS provides current data to ETA, from which it develops the LLSIL tables.

The Employment and Training Administration (ETA) published the 1999 updates to the LLSIL in the **Federal Register** on May 14, 1999, at 64 FR 26452. This notice again updates the LLSIL to reflect cost of living increases for 1999 by applying the BLS provided percentage change in the December 1999 Consumer Price Index for All Urban Consumers (CPI–U), compared with the December 1998 CPI–U, to each of the May 14, 1999 LLSIL figures. Those updated figures for a family of four are listed in Table 1 below by region for both metropolitan and nonmetropolitan areas. Figures in all of the accompanying tables are rounded up to the nearest ten. Since ''low income individual,'' ''disadvantaged adult, and ''disadvantaged youth'' may be determined by family income at 70 percent of the LLSIL, those figures are listed below as well.

Jurisdictions included in the various regions, based generally on Census Divisions of the U.S. Department of Commerce, are as follows:

Northeast

Connecticut
Maine
Massachusetts
New Hampshire
New Jersey
New York
Pennsylvania
Rhode Island
Vermont
Virgin Islands

Midwest

Illinois
Indiana
Iowa
Kansas
Michigan
Minnesota
Missouri
Nebraska
North Dakota
Ohio
South Dakota
Wisconsin

South

Alabama
American Samoa
Arkansas
Delaware
District of Columbia
Florida
Georgia
Northern Marianas
Oklahoma
Palau
Puerto Rico
South Carolina
Kentucky
Louisiana
Marshall Islands
Maryland
Mississippi
Micronesia
North Carolina
Tennessee
Texas
Virginia
West Virginia

West

Arizona
California
Colorado
Idaho
Montana
Nevada
New Mexico
Oregon
Utah
Washington
Wyoming

Additionally, separate figures have been provided for Alaska, Hawaii, and Guam as indicated in Table 2 below.

For Alaska, Hawaii, and Guam, the year 2000 figures were updated from the

May 14, 1999 ''State Index'' based on the ratio of the urban change in the State (using Anchorage for Alaska and Honolulu for Hawaii and Guam) compared to the West regional metropolitan change, and then applying that index to the West regional metropolitan change.

Data on 23 selected Metropolitan Statistical Areas (MSA's) are also available. These are based on semiannual CPI–U changes for a 12 month period ending in December 1999. The updated LLSIL figures for these MSA's and 70 percent of the LLSIL are reported in Table 3.

Table 4 is a listing of each of the various figures at 70 percent of the updated 2000 LLSIL for family sizes of one to six persons. For families larger than six persons, an amount equal to the difference between the six-person and the five-person family income levels should be added to the six-person family income level for each additional person in the family. Where the poverty level for a particular family size is greater than the corresponding LLSIL figure, the figure is indicated in parentheses. Table 5, 100 percent of LLSIL, is used to determine self-sufficiency as noted at § 663.230 of WIA Interim Final Regulations and WIA section 134(d)(3)(A)(ii).

Use of Data

Governors should designate the appropriate LLSIL's for use within the State from Tables 1 through 3. Tables 4 and 5 may be used with any of the levels designated. The Governor's designation may be provided by disseminating information on Metropolitan Statistical Areas (MSA's) and metropolitan and nonmetropolitan areas within the State, or it may involve further calculations. For example, the State of New Jersey may have four or more LLSIL figures: metropolitan, nonmetropolitan, for portions of the State in the New York City MSA, and for those in the Philadelphia MSA. If a Workforce Development Area includes areas that would be covered by more than one figure, the Governor may determine which is to be used. Under 20 CFR 661.120, a State's policies and measures for the workforce investment system will be accepted by the Secretary to the extent that they are not inconsistent with the WIA and the WIA regulations.

Disclaimer on Statistical Uses

It should be noted that the publication of these figures is only for the purpose of meeting the requirements specified by WIA as defined in the law and regulations. BLS has not revised the lower living family budget since 1981, and has no plans to do so. The four-person urban family budget estimates series has been terminated. The CPI–U adjustments used to update the LLSIL for this publication are not precisely comparable, most notably because certain tax items were included in the 1981 LLSIL, but are not in the CPI–U. Thus, these figures should not be used for any statistical purposes, and are valid only for those purposes under WIA as defined in the law and regulations.

Signed at Washington, DC, this 5th day of May 2000.

Shirley M. Smith,

Administrator, Office of Adult Services.

Attachments

BILLING CODE 4510–30–P

Table 1: Lower Living Standard Income Level (for a family of four persons) by Region[1]

Region[2]	1999 Adjusted LLSIL	2000 Factor	2000 Adjusted LLSIL	70 percent LLSIL
Northeast				
Metro	$28,670	1.025	$29,390	$20,580
Non-Metro[3]	$28,320	1.024	$29,000	$20,300
Midwest				
Metro	$26,580	1.029	$27,360	$19,150
Non-Metro	$25,150	1.025	$25,780	$18,050
South				
Metro	$25,140	1.026	$25,800	$18,060
Non-Metro	$24,050	1.019	$24,510	$17,160
West				
Metro	$28,270	1.029	$29,090	$20,370
Non-Metro[4]	$27,770	1.025	$28,470	$19,930

[1]For ease of use, these figures have been rounded to the next highest ten dollars.

[2]Metropolitan area measures were calculated from the weighted average CPI-Us for city size classes A and B/C. Non-metropolitan area measures were calculated from the CPI-Us for city size class D.

[3]Nonmetropolitan area percent changes for the Northeast region are no longer available. The Non-metropolitan percent change was calculated using the U.S. average CPI-U for city size Class D.

11

[4]Non-metropolitan area percent changes for the West region are unpublished data.

Table 2: Lower Living Standard Income Level (for a family of four persons) -- Alaska, Hawaii and Guam[1]

Region	1999 Adjusted LLSIL	2000 Factor	2000 Adjusted LLSIL	70 percent LLSIL
Alaska				
Metro	$35,820	1.009	$36,150	$25,300
Non-Metro[2]	$34,860	1.025	$35,740	$25,020
Hawaii, Guam				
Metro	$37,290	1.016	$37,890	$26,530
NonMetro[2]	$37,220	1.025	$38,160	$26,710

[1]Rounded to next highest ten dollars.

[2]Non-Metropolitan percent changes for Alaska, Hawaii and Guam were calculated from the CPI-Us for city size Class D in the Western Region.

Table 3: Lower Living Standard Income Level (for a family of four persons) 23 MSAs[1]

Metropolitan Statistical Areas (MSAs)	1999 Adjusted LLSIL	2000 Factor	**2000 Adjusted LLSIL**	**70 percent LLSIL**
Anchorage, AK	$35,820	1.009	$36,150	$25,300
Atlanta, GA	$25,250	1.027	$25,940	$18,160
Boston--Brockton--Nashua, MA/NH/ME/CT	$30,420	1.03	$31,340	$21,940
Chicago--Gary--Kenosha, IL/IN/WI	$27,980	1.023	$28,630	$20,040
Cincinnati--Hamilton, OH/KY/IN	$26,620	1.032	$27,480	$19,240
Cleveland--Akron, OH	$27,730	1.018	$28,240	$19,770
Dallas--Ft. Worth, TX	$23,920	1.034	$24,740	$17,320
Denver--Boulder--Greeley, CO	$27,910	1.03	$28,750	$20,130
Detroit--Ann Arbor--Flint, MI	$25,820	1.027	$26,520	$18,570
Honolulu, HI	$37,290	1.016	$37,890	$26,530
Houston--Galveston--Brazoria, TX	$23,340	1.018	$23,770	$16,640
Kansas City, MO/KS	$25,800	1.024	$26,420	$18,500
Los Angeles--Riverside--Orange County, CA	$28,630	1.024	$29,320	$20,530
Milwaukee--Racine, WI	$26,890	1.023	$27,510	$19,260
Minneapolis--St. Paul, MN/WI	$26,130	1.036	$27,080	$18,950
New York--Northern NJ--Long Island, NY/NJ/CT/PA	$29,950	1.022	$30,610	$21,430
Philadelphia--Wilmington--Atlantic City, PA/NJ/DE/MD	$27,890	1.025	$28,590	$20,020
Pittsburgh, PA	$26,860	1.021	$27,430	$19,200
St. Louis, MO/IL	$25,490	1.011	$25,780	$18,040
San Diego, CA	$29,240	1.036	$30,300	$21,210
San Francisco--Oakland--San Jose, CA	$29,690	1.043	$30,970	$21,680
Seattle--Tacoma--Bremerton, WA	$31,010	1.03	$31,950	$22,360
Washington--Baltimore, DC/MD/VA/WV[2]	$30,320	1.023	$31,020	$21,720

[1]Rounded to next highest ten dollars.

[2] Baltimore and Washington are now calculated as a single metropolitan statistical area.

Table 5 - Updated 2000 LLSIL (100%), By Family Size

To use the LLSIL to determine the minimum level for establishing self-sufficiency criteria at the state or local level, begin by locating the metropolitan area or region from Table 1, 2 or 3. The individual must locate their region or metropolitan statistical area and then find the 2000 Adjusted LLSIL amount for that location. These figures apply to a family of four. Locate the corresponding number in the family of four column below. Move left or right across that row to the size that corresponds to the individual's family unit. That figure is the minimum figure States must set for determining whether employment leads to self-sufficiency under WIA programs.

Family of One	Family of Two	Family of Three	Family of Four	Family of Five	Family of Six
$8,560	$14,030	$19,260	$23,770	$28,050	$32,810
$8,830	$14,470	$19,860	$24,510	$28,930	$33,830
$8,910	$14,600	$20,040	$24,740	$29,200	$34,150
$9,290	$15,220	$20,890	$25,780	$30,430	$35,580
$9,290	$15,230	$20,900	$25,800	$30,450	$35,610
$9,340	$15,310	$21,020	$25,940	$30,610	$35,800
$9,520	$15,590	$21,410	$26,420	$31,180	$36,460
$9,550	$15,650	$21,490	$26,520	$31,300	$36,600
$9,750	$15,980	$21,940	$27,080	$31,960	$37,380
$9,850	$16,150	$22,170	$27,360	$32,290	$37,760
$9,880	$16,190	$22,220	$27,430	$32,370	$37,860
$9,900	$16,220	$22,260	$27,480	$32,430	$37,930
$9,910	$16,240	$22,290	$27,510	$32,470	$37,970
$10,170	$16,670	$22,880	$28,240	$33,330	$38,980
$10,250	$16,800	$23,070	$28,470	$33,600	$39,290
$10,300	$16,870	$23,160	$28,590	$33,740	$39,460
$10,310	$16,900	$23,200	$28,630	$33,790	$39,510
$10,350	$16,970	$23,290	$28,750	$33,930	$39,680
$10,440	$17,110	$23,490	$29,000	$34,220	$40,020
$10,480	$17,170	$23,570	$29,090	$34,330	$40,150
$10,560	$17,300	$23,750	$29,320	$34,600	$40,470
$10,590	$17,350	$23,810	$29,390	$34,690	$40,560
$10,910	$17,880	$24,550	$30,300	$35,760	$41,820
$11,020	$18,060	$24,800	$30,610	$36,120	$42,250
$11,150	$18,280	$25,090	$30,970	$36,550	$42,740
$11,170	$18,310	$25,130	$31,020	$36,610	$42,810
$11,290	$18,500	$25,390	$31,340	$36,990	$43,250
$11,510	$18,860	$25,880	$31,950	$37,710	$44,100
$12,870	$21,090	$28,950	$35,740	$42,180	$49,330
$13,020	$21,330	$29,290	$36,150	$42,660	$49,890
$13,650	$22,360	$30,700	$37,890	$44,720	$52,290
$13,740	$22,520	$30,910	$38,160	$45,030	$52,670

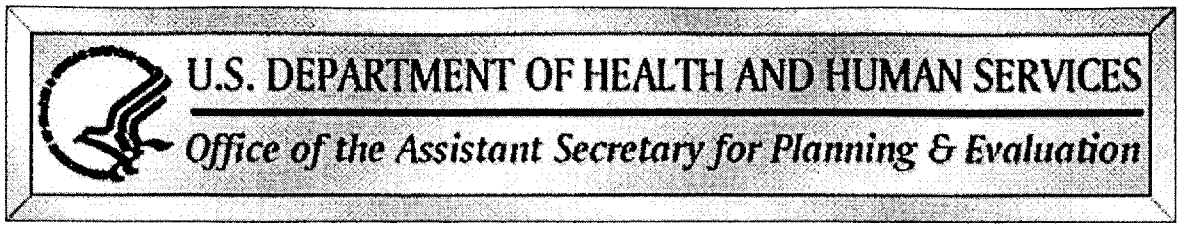

THE 2000 HHS POVERTY GUIDELINES

One Version of the [U.S.] Federal Poverty Measure

[Summary Figures and *Federal Register* References -- Poverty Guidelines Since 1982]
[Information Contacts/References -- Poverty Guidelines & Thresholds -- History of U.S. Poverty Lines]

There are two slightly different versions of the federal poverty measure:

- The poverty thresholds, and
- The poverty guidelines.

The **poverty thresholds** are the original version of the federal poverty measure. They are updated each year by the **Census Bureau** (although they were originally developed by Mollie Orshansky of the Social Security Administration). The thresholds are used mainly for **statistical** purposes — for instance, preparing estimates of the number of Americans in poverty each year. (In other words, all official poverty population figures are calculated using the poverty thresholds, not the guidelines.)

The **poverty guidelines** are the other version of the federal poverty measure. They are issued each year in the *Federal Register* by the **Department of Health and Human Services** (HHS). The guidelines are a simplification of the poverty thresholds for use for **administrative** purposes — for instance, determining financial eligibility for certain federal programs. (The full text of the *Federal Register* notice with the 2000 poverty guidelines is available here.)

The poverty guidelines are sometimes loosely referred to as the "federal poverty level" (FPL), but that term is ambiguous, and should be avoided in situations (e.g., legislative or administrative) where precision is important.

2000 HHS Poverty Guidelines

Size of Family Unit	48 Contiguous States and D.C.	Alaska	Hawaii
1	$ 8,350	$10,430	$ 9,590
2	11,250	14,060	12,930
3	14,150	17,690	16,270
4	17,050	21,320	19,610
5	19,950	24,950	22,950
6	22,850	28,580	26,290
7	25,750	32,210	29,630
8	28,650	35,840	32,970
For each additional person, add	2,900	3,630	3,340

SOURCE: *Federal Register*, Vol. 65, No. 31, February 15, 2000, pp. 7555-7557.

(The separate poverty guidelines for Alaska and Hawaii reflect Office of Economic Opportunity

administrative practice beginning in the 1966-1970 period. Note that the poverty thresholds — the original version of the poverty measure — have never had separate figures for Alaska and Hawaii.)

Programs using the guidelines (or percentage multiples of the guidelines — for instance, 125 percent or 185 percent of the guidelines) in determining eligibility include Head Start, the Food Stamp Program, the National School Lunch Program, the Low-Income Home Energy Assistance Program, and the Child Health Insurance Program. Note that in general, public assistance programs (Aid to Families with Dependent Children and its block grant successor Temporary Assistance for Needy Families, and Supplemental Security Income) do NOT use the poverty guidelines in determining eligibility. The Earned Income Tax Credit program also does NOT use the poverty guidelines to determine eligibility.

The poverty guidelines (unlike the poverty thresholds) are designated by the year in which they are issued. For instance, the guidelines issued in February 2000 are designated the 2000 poverty guidelines. However, the 2000 HHS poverty guidelines only reflect price changes through calendar year 1999; accordingly, they are approximately equal to the Census Bureau poverty thresholds for calendar year 1999. (The 1999 thresholds are expected to be issued in final form in September or October 2000; a preliminary version of the 1999 thresholds is now available from the Census Bureau.)

The computations for the 2000 poverty guidelines are available.

Go to the page of Information Contacts and References on the Poverty Guidelines, the Poverty Thresholds, and the Development and History of U.S. Poverty Lines.

Return to the main Poverty Guidelines, Research, and Measurement page.

[FR Doc. 00–11978 Filed 5–11–00; 8:45 am]

BILLING CODE 4530–30–C

DEPARTMENT OF LABOR

Employment Standards Administration; Wage and Hour Division

Minimum Wages for Federal and Federally Assisted Construction; General Wage Determination Decisions

General wage determination decisions of the Secretary of Labor are issued in accordance with applicable law and are based on the information obtained by the Department of Labor from its study of local wage conditions and data made available from other sources. They specify the basic hourly wage rates and fringe benefits which are determined to be prevailing for the described classes of laborers and mechanics employed on construction projects of a similar character and in the localities specified therein.

The determinations in these decisions of prevailing rates and fringe benefits have been made in accordance with 29 CFR Part 1, by authority of the Secretary of Labor pursuant to the provisions of the Davis-Bacon Act of March 3, 1931, as amended (46 Stat. 1494, as amended, 40 U.S.C. 276a) and of other Federal statutes referred to in 29 CFR Part 1, Appendix, as well as such additional statutes as may from time to time be enacted containing provisions for the payment of wages determined to be prevailing by the Secretary of Labor in accordance with the Davis-Bacon Act. The prevailing rates and fringe benefits determined in these decisions shall, in accordance with the provisions of the foregoing statutes, constitute the minimum wages payable on Federal and federally assisted construction projects to laborers and mechanics of the specified classes engaged on contract work of the character and in the localities described therein.

Good cause is hereby found for not utilizing notice and public comment procedure thereon prior to the issuance of these determinations as prescribed in 5 U.S.C. 553 and not providing for delay in the effective date as prescribed in that section, because the necessity to issue current construction industry wage determinations frequently and in large volume causes procedures to be impractical and contrary to the public interest.

General wage determination decisions, and modifications and supersedes decisions thereto, contain no expiration dates and are effective from their date of notice in the **Federal Register**, or on the date written notice is received by the agency, whichever is earlier. These decisions are to be used in accordance with the provisions of 29 CFR Parts 1 and 5. Accordingly, the applicable decision, together with any modifications issued, must be made a part of every contract for performance of the described work within the geographic area indicated as required by an applicable Federal prevailing wage law and 29 CFR Part 5. The wage rates and fringe benefits, notice of which is published herein, and which are contained in the Government Printing Office (GPO) document entitled ''General Wage Determinations Issued Under The Davis-Bacon And Related Acts,'' shall be the minimum paid by contractors and subcontractors to laborers and mechanics.

Any person, organization, or governmental agency having an interest in the rates determined as prevailing is encouraged to submit wage rate and fringe benefit information for consideration by the Department. Further information and self-explanatory forms for the purpose of submitting this data may be obtained by writing to the U.S. Department of Labor, Employment Standards Administration, Wage and Hour Division, Division of Wage Determinations, 200 Constitution Avenue, N.W., Room S–3014, Washington, D.C. 20210.

New General Wage Determination Decisions

The number of decisions added to the Government Printing Office document entitled ''General Wage Determinations Issued Under the Davis-Bacon and Related Acts'' are listed by Volume and States:

Volume III

Georgia
GA000095 (May 12, 2000)

Modifications to General Wage Determination Decisions

The number of decisions listed in the Government Printing Office document entitled ''General Wage Determinations issued Under the Davis-Bacon and related Acts'' being modified are listed by Volume and State. Dates of publication in the **Federal Register** are in parentheses following the decisions being modified.

Volume I

Connecticut
CT000001 (Feb. 11, 2000)
CT000002 (Feb. 11, 2000)
CT000003 (Feb. 11, 2000)
CT000004 (Feb. 11, 2000)
CT000005 (Feb. 11, 2000)
CT000006 (Feb. 11, 2000)

New Jersey
NJ000009 (Feb. 11, 2000)

VOLUME II

District of Columbia
DC000001 (Feb. 11, 2000)
DC000002 (Feb. 11, 2000)
DC000003 (Feb. 11, 2000)

Maryland
MD000001 (Feb. 11, 2000)
MD000002 (Feb. 11, 2000)
MD000006 (Feb. 11, 2000)
MD000009 (Feb. 11, 2000)
MD000011 (Feb. 11, 2000)
MD000012 (Feb. 11, 2000)
MD000016 (Feb. 11, 2000)
MD000017 (Feb. 11, 2000)
MD000021 (Feb. 11, 2000)
MD000031 (Feb. 11, 2000)
MD000035 (Feb. 11, 2000)
MD000037 (Feb. 11, 2000)
MD000039 (Feb. 11, 2000)
MD000043 (Feb. 11, 2000)
MD000048 (Feb. 11, 2000)
MD000055 (Feb. 11, 2000)
MD000056 (Feb. 11, 2000)
MD000057 (Feb. 11, 2000)
MD000058 (Feb. 11, 2000)

Pennsylvania
PA000021 (Feb. 11, 2000)
PA000023 (Feb. 11, 2000)
PA000029 (Feb. 11, 2000)

Virginia
VA000003 (Feb. 11, 2000)
VA000015 (Feb. 11, 2000)
VA000017 (Feb. 11, 2000)
VA000018 (Feb. 11, 2000)
VA000020 (Feb. 11, 2000)
VA000022 (Feb. 11, 2000)
VA000025 (Feb. 11, 2000)
VA000035 (Feb. 11, 2000)
VA000036 (Feb. 11, 2000)
VA000048 (Feb. 11, 2000)
VA000054 (Feb. 11, 2000)
VA000055 (Feb. 11, 2000)
VA000056 (Feb. 11, 2000)
VA000076 (Feb. 11, 2000)
VA000079 (Feb. 11, 2000)
VA000080 (Feb. 11, 2000)
VA000081 (Feb. 11, 2000)
VA000084 (Feb. 11, 2000)
VA000085 (Feb. 11, 2000)
VA000092 (Feb. 11, 2000)
VA000099 (Feb. 11, 2000)
VA000103 (Feb. 11, 2000)

Volume III

Georgia
GA000002 (Feb. 11, 2000)
GA000005 (Feb. 11, 2000)
INDEX (Feb. 11, 2000)

Volume IV

Illinois
IL000001 (Feb. 11, 2000)
IL000012 (Feb. 11, 2000)
IL000014 (Feb. 11, 2000)
IL000015 (Feb. 11, 2000)
IL000039 (Feb. 11, 2000)

Michigan
MI000001 (Feb. 11, 2000)
MI000002 (Feb. 11, 2000)
MI000003 (Feb. 11, 2000)
MI000004 (Feb. 11, 2000)
MI000005 (Feb. 11, 2000)
MI000007 (Feb. 11, 2000)
MI000012 (Feb. 11, 2000)
MI000017 (Feb. 11, 2000)
MI000030 (Feb. 11, 2000)

MI000039 (Feb. 11, 2000)
MI000042 (Feb. 11, 2000)
MI000047 (Feb. 11, 2000)
MI000060 (Feb. 11, 2000)
MI000062 (Feb. 11, 2000)
MI000063 (Feb. 11, 2000)
MI000064 (Feb. 11, 2000)
MI000066 (Feb. 11, 2000)
MI000067 (Feb. 11, 2000)
MI000068 (Feb. 11, 2000)
MI000069 (Feb. 11, 2000)
MI000070 (Feb. 11, 2000)
MI000071 (Feb. 11, 2000)
MI000072 (Feb. 11, 2000)
MI000073 (Feb. 11, 2000)
MI000074 (Feb. 11, 2000)
MI000075 (Feb. 11, 2000)
MI000076 (Feb. 11, 2000)
MI000077 (Feb. 11, 2000)
MI000078 (Feb. 11, 2000)
MI000079 (Feb. 11, 2000)
MI000080 (Feb. 11, 2000)
MI000081 (Feb. 11, 2000)
MI000082 (Feb. 11, 2000)
MI000083 (Feb. 11, 2000)
MI000084 (Feb. 11, 2000)
MI000085 (Feb. 11, 2000)
MI000087 (Feb. 11, 2000)

Volume V

Missouri
MO000001 (Feb. 11, 2000)
MO000002 (Feb. 11, 2000)
MO000003 (Feb. 11, 2000)
MO000004 (Feb. 11, 2000)
MO000005 (Feb. 11, 2000)
MO000006 (Feb. 11, 2000)
MO000007 (Feb. 11, 2000)
MO000009 (Feb. 11, 2000)
MO000010 (Feb. 11, 2000)
MO000011 (Feb. 11, 2000)
MO000013 (Feb. 11, 2000)
MO000014 (Feb. 11, 2000)
MO000016 (Feb. 11, 2000)
MO000019 (Feb. 11, 2000)
MO000020 (Feb. 11, 2000)
MO000041 (Feb. 11, 2000)
MO000042 (Feb. 11, 2000)
MO000043 (Feb. 11, 2000)
MO000047 (Feb. 11, 2000)
MO000049 (Feb. 11, 2000)
MO000051 (Feb. 11, 2000)
MO000052 (Feb. 11, 2000)
MO000053 (Feb. 11, 2000)
MO000054 (Feb. 11, 2000)
MO000055 (Feb. 11, 2000)
MO000056 (Feb. 11, 2000)
MO000057 (Feb. 11, 2000)
MO000058 (Feb. 11, 2000)
MO000059 (Feb. 11, 2000)
MO000062 (Feb. 11, 2000)
MO000063 (Feb. 11, 2000)
MO000064 (Feb. 11, 2000)
MO000065 (Feb. 11, 2000)
MO000066 (Feb. 11, 2000)

Volume VI

Utah
UT000005 (Feb. 11, 2000)

Volume VII

None.

General Wage Determination Publication

General wage determinations issued under the Davis-Bacon and related Acts, including those noted above, may be found in the Government Printing Office (GPO) document entitled ''General Wage Determinations Issued Under The Davis-Bacon and Related Acts.'' This publication is available at each of the 50 Regional Government Depository Libraries and many of the 1,400 Government Depository Libraries across the country.

The general wage determinations issued under the Davis-Bacon and related Acts are available electronically by subscription to the FedWorld Bulletin Board System of the National Technical Information Service (NTIS) of the U.S. Department of Commerce at 1–800–363–2068.

Hard-copy subscriptions may be purchased from: Superintendent of Documents, U.S. Government Printing Office, Washington, D.C. 20402, (202) 512–1800.

When ordering hard-copy subscription(s), be sure to specify the State(s) of interest, since subscriptions may be ordered for any or all of the seven separate volumes, arranged by State. Subscriptions include an annual edition (issued in January or February) which includes all current general wage determinations for the States covered by each volume. Throughout the remainder of the year, regular weekly updates are distributed to subscribers.

Signed at Washington, DC this 4th Day of May 2000.

Carl J. Poleskey,

Chief, Branch of Construction Wage Determinations.

[FR Doc. 00–11670 Filed 5–11–00; 8:45 am]

BILLING CODE 4510–27–M

DEPARTMENT OF LABOR

Occupational Safety and Health Administration

[Docket No. NRTL–2–90]

SGS U.S. Testing Company, Inc.; Expansion of Recognition

AGENCY: Occupational Safety and Health Administration (OSHA), Labor.

ACTION: Notice.

SUMMARY: This notice announces the Agency's final decision on the application of SGS U.S. Testing Company, Inc. (SGSUS), for expansion of its recognition as a Nationally Recognized Testing Laboratory (NRTL) under 29 CFR 1910.7.

EFFECTIVE DATE: This recognition becomes effective on May 12, 2000 and, unless modified in accordance with 29 CFR 1910.7, continues in effect while SGSUS remains recognized by OSHA as an NRTL.

FOR FURTHER INFORMATION CONTACT: Bernard Pasquet, Office of Technical Programs and Coordination Activities, NRTL Program, Occupational Safety and Health Administration, U.S. Department of Labor, 200 Constitution Avenue NW, Room N3653, Washington, DC 20210, or phone (202) 693–2110.

SUPPLEMENTARY INFORMATION:

Notice of Final Decision

The Occupational Safety and Health Administration (OSHA) hereby gives notice of the expansion of recognition of SGS U.S. Testing Company, Inc. (SGSUS), as a Nationally Recognized Testing Laboratory (NRTL). The SGSUS expansion covers the use of the additional test standards and the additional programs, listed below.

OSHA recognition of an NRTL signifies that the organization has met the legal requirements in § 1910.7 of Title 29, Code of Federal Regulations (29 CFR 1910.7). Recognition is an acknowledgment that the organization can perform independent safety testing and certification of the specific products covered within its scope of recognition and is not a delegation or grant of government authority. As a result of recognition, OSHA can accept products ''properly certified'' by the NRTL. OSHA processes applications related to an NRTL's recognition following requirements in Appendix A to 29 CFR 1910.7. This appendix requires that the Agency publish this public notice of its final decision on an application.

SGSUS submitted an application, dated August 9, 1999 (see Exhibit 14), to expand its recognition as an NRTL for the four (4) additional test standards listed below. The NRTL also included a request for use of the two (2) additional supplemental programs listed below. In processing the application, OSHA performed an on-site review of the SGSUS facility in Fairfield, New Jersey, on June 7–8, 1999. In the final report of the on-site review report (see Exhibit 15), the assessor recommended the expansion for the additional test standards and additional programs.

OSHA published the required notice in the **Federal Register** (65 FR 2438, 01/14/2000) to announce the SGSUS expansion application. The notice included a preliminary finding that SGSUS could meet the requirements for expansion of its recognition, and OSHA invited public comment on the application by March 14, 2000. OSHA received no comments concerning this application.

The most recent prior notices published by OSHA for the SGSUS

recognition covered the renewal and expansion of its recognition, which OSHA announced on May 19, 1998 (63 FR 27598), and granted on August 28, 1998 (63 FR 46084). OSHA published a correction to this last notice on December 17, 1998 (63 FR 69683).

You may obtain or review copies of all public documents pertaining to the application by contacting the Docket Office, Occupational Safety and Health Administration, U.S. Department of Labor, 200 Constitution Avenue NW, Room N2625, Washington, DC 20210, telephone: (202) 693–2350. You should refer to Docket No. NRTL–2–90, the permanent records of public information on the SGSUS recognition.

The current addresses of the facilities (sites) that OSHA recognizes for SGSUS are:

SGS U.S. Testing Company Inc., 291 Fairfield Avenue, Fairfield, New Jersey 07004

SGS U.S. Testing Company Inc., 5555 Telegraph Road, Los Angeles, California 90040

Final Decision and Order

The NRTL Program staff has examined the application, the on-site review report, and other pertinent information. Based upon this examination and the staff's recommendation, OSHA finds that SGS U.S. Testing Company Inc., has met the requirements of 29 CFR 1910.7 for expansion of its recognition to include the additional test standards, listed below, subject to the limitations and conditions listed below. Pursuant to the authority in 29 CFR 1910.7, OSHA hereby expands the recognition of SGSUS, subject to these limitations and conditions.

Limitations

OSHA hereby expands the recognition of SGSUS for testing and certification of products to demonstrate conformance to the four (4) additional test standards listed below. OSHA has determined that each test standard meets the requirements for an appropriate test standard, within the meaning of 29 CFR 1910.7(c).

The Agency's recognition of SGSUS, or any NRTL, for a particular test standard is always limited to equipment or materials (products) for which OSHA standards require third party testing and certification before use in the workplace. As a result, OSHA's recognition of an NRTL for a test standard excludes any product(s), falling within the scope of the test standard, for which OSHA has no such requirements. In addition, testing or certification to any of the standards listed below is limited to those sites that have the proper capability and programs. In fact, this limitation applies to all test standards for which SGSUS is currently recognized. This treatment is consistent with the recognition that OSHA has granted to other NRTLs that operate or utilize multiple sites.

ANSI/UL 696 Electric Toys
ANSI/UL 697 Toy Transformers
ANSI/UL 1310 Class 2 Power Units
ANSI/UL 6500 Audio/Visual and Musical Instrument Apparatus for Household, Commercial, and Similar General Use

The designations and titles of the above test standards were current at the time of the preparation of the preliminary notice, which announced the SGSUS application for expansion.

Programs and Procedures

OSHA is granting the request by SGSUS to use the two (2) supplemental programs, listed below, based upon the criteria detailed in the March 9, 1995 **Federal Register** notice (60 FR 12980, 3/9/95). This notice lists nine (9) programs and procedures (collectively, programs), eight of which an NRTL may use to control and audit, but not actually to generate, the data relied upon for product certification. An NRTL's initial recognition will always include the first or basic program, which requires that all product testing and evaluation be performed in-house by the NRTL that will certify the product. The on-site review report indicates that SGSUS meets the criteria for use of the following additional supplemental programs:

Program 3: Acceptance of product evaluations from independent organizations, other than NRTLs.

Program 9: Acceptance of services other than testing or evaluation performed by subcontractors or agents.

OSHA developed the program descriptions to limit how an NRTL may perform certain aspects of its work and to permit the activities covered under a program only when the NRTL meets certain criteria. In this sense, they are special conditions that the Agency places on an NRTL's recognition. OSHA does not consider these programs in determining whether an NRTL meets the requirements for recognition under 29 CFR 1910.7. However, OSHA does treat these programs as one of the three elements that defines an NRTL's scope of recognition.

OSHA previously granted a request by SGSUS to use two other supplemental programs but included certain conditions on their use. Since these conditions are still in effect and apply to the use of Program 3, we have listed them below. These conditions apply solely to the SGSUS operations as an NRTL and solely to those products that it certifies for purposes of enabling employers to meet OSHA product approval requirements. The conditions are in addition to the requirements detailed in the previously cited March 9, 1995 **Federal Register**. Also, they are in addition to the other conditions listed below, which OSHA normally imposes in its recognition notices. The NRTL Program staff includes these type of additional conditions on OSHA's informational web page for the NRTL. When the staff determines that a particular condition is no longer in effect, the staff removes it from the web page and notifies the NRTL accordingly. OSHA has no requirement to give public notice when removing such a condition.

Conditions

SGS U.S. Testing Company, Inc., must also abide by the following conditions of the recognition, in addition to those already required by 29 CFR 1910.7:

SGS U.S. Testing Company, Inc., Fairfield, New Jersey, will review and approve the qualifications of all external organizations prior to SGS U.S. Testing Company, Inc., accepting test data from these organizations.

SGS U.S. Testing Company, Inc., Fairfield, New Jersey, will review and approve the qualifications of all external organizations prior to SGS U.S. Testing Company, Inc., using a site of any of these organizations for witnessed test data.

OSHA must be allowed access to the SGSUS facilities and records for purposes of ascertaining continuing compliance with the terms of its recognition and to investigate as OSHA deems necessary;

If SGSUS has reason to doubt the efficacy of any test standard it is using under this program, it must promptly inform the organization that developed the test standard of this fact and provide that organization with appropriate relevant information upon which its concerns are based;

SGSUS must not engage in or permit others to engage in any misrepresentation of the scope or conditions of its recognition. As part of this condition, SGSUS agrees that it will allow no representation that it is either a recognized or an accredited Nationally Recognized Testing Laboratory (NRTL) without clearly indicating the specific equipment or material to which this recognition is tied, or that its recognition is limited to certain products;

SGSUS must inform OSHA as soon as possible, in writing, of any change of ownership, facilities, or key personnel, and of any major changes in its operations as an NRTL, including details;

SGSUS will continue to meet all the terms of its recognition and will always comply with all OSHA policies pertaining to this recognition;

SGSUS will continue to meet the requirements for recognition in all areas where it has been recognized; and

SGSUS will always cooperate with OSHA to assure compliance with the spirit as well as the letter of its recognition and 29 CFR 1910.7.

Signed at Washington, DC this 2nd day of May 2000.

Charles N. Jeffress,

Assistant Secretary.

[FR Doc. 00–11979 Filed 5–11–00; 8:45 am]

BILLING CODE 4510–26–P

OFFICE OF MANAGEMENT AND BUDGET

Office of Federal Procurement Policy

Office of Federal Procurement Policy; Determination of Executive Compensation Benchmark Amount Pursuant to Section 808 of Pub. L. 105–85.

AGENCY: Office of Federal Procurement Policy, OMB.

ACTION: Notice.

SUMMARY: The Administrator of the Office of Federal Procurement Policy (OFPP) is hereby publishing the attached memorandum to heads of agencies concerning the determination of the maximum ''benchmark'' compensation that will be allowable under government contracts during contractors' FY 2000—$353,010. This determination is required to be made pursuant to Section 808 of Public Law 105–85. It applies equally to both defense and civilian procurement agencies.

FOR FURTHER INFORMATION CONTACT: Richard C. Loeb, Executive Secretary, Cost Accounting Standards Board, OFPP on (202) 395–3254.

Deidre A. Lee,

Administrator.

To the Heads of Executive Departments and Agencies

Subject: Determination of Executive Compensation Benchmark Amount Pursuant to Section 808 of Pub. L. 105–85

This memorandum sets forth the ''benchmark compensation amount'' as required by Section 39 of the Office of Federal Procurement Policy (OFPP) Act (41 U.S.C. 435), as amended. Under Section 39, the ''benchmark compensation amount'' is ''the median amount of the compensation provided for all senior executives of all benchmark corporations for the most recent year for which data is available.'' The ''benchmark compensation amount'' established as directed by Section 39 limits the allowability of compensation costs under government contracts. The ''benchmark compensation amount'' does not limit the compensation that an executive may otherwise receive.

Based on a review of commercially available surveys of executive compensation and after consultation with the Director of the Defense Contract Audit Agency, I have determined pursuant to the requirements of Section 39 that the benchmark compensation amount for contractor fiscal year 2000 is $353,010. This benchmark compensation amount is to be used for contractor fiscal year 2000, and subsequent contractor fiscal years, unless and until revised by OFPP. This benchmark compensation amount applies to contract costs incurred after January 1, 2000, under covered contracts of both the defense and civilian procurement agencies as specified in Section 808 of Pub. L. 105–85.

Questions concerning this memorandum may be addressed to Richard C. Loeb, Executive Secretary, Cost Accounting Standards Board, OFPP, on (202) 395–3254.

Deidre A. Lee,

Administrator.

[FR Doc. 00–12017 Filed 5–11–00; 8:45 am]

BILLING CODE 3110–01–P

NATIONAL AERONAUTICS AND SPACE ADMINISTRATION

[Notice 00–046]

Notice of Prospective Patent License

AGENCY: National Aeronautics and Space Administration

ACTION: Notice of prospective patent license.

SUMMARY: NASA hereby gives notice that Access, LLC, of Norfolk, VA, has applied for an exclusive license to practice the inventions described and claimed in U.S. Patent Number 5,377,100, entitled ''A Method of Encouraging Attention by Correlating Video Game Difficulty With Attention Level,'' and NASA Case No. LAR 15817–1, entitled ''A Method of Encouraging Physiological Self-Regulation Through Modulation of an Operator's Control Input to a Video Game or Training Simulator,'' both of which are assigned to the United States of America as represented by the Administrator of the National Aeronautics and Space Administration. Written objections to the prospective grant of a license should be sent to Langley Research Center.

DATES: Responses to this notice must be received by July 11, 2000.

FOR FURTHER INFORMATION CONTACT: Helen M. Galus, Patent Attorney, Langley Research Center, Mail Code 212, Hampton, VA 23681–2199; telephone 757–864–3227; facsimile 757–864–9190.

Dated: May 1, 2000.

Edward A. Frankle,

General Counsel.

[FR Doc. 00–11980 Filed 5–11–00; 8:45 am]

BILLING CODE 7510–01–P

NATIONAL AERONAUTICS AND SPACE ADMINISTRATION

[Notice (00–050)]

Notice of Prospective Patent License

AGENCY: National Aeronautics and Space Administration.

ACTION: Notice of prospective patent license.

SUMMARY: NASA hereby gives notice that Cognitive Technologies, LLC, of Purcellville, VA, has applied for an exclusive license to practice the inventions described and claimed in U.S. Patent Number 5,377,100, entitled ''A METHOD OF ENCOURAGING ATTENTION BY CORRELATING VIDEO GAME DIFFICULTY WITH ATTENTION LEVEL,'' and NASA Case

No. LAR 15817–1, entitled ''A METHOD OF ENCOURAGING PHYSIOLOGICAL SELF-REGULATION THROUGH MODULATION OF AN OPERATOR'S CONTROL INPUT TO A VIDEO GAME OR TRAINING SIMULATOR,'' both of which are assigned to the United States of America as represented by the Administrator of the National Aeronautics and Space Administration. Written objections to the prospective grant of a license should be sent to Langley Research Center.

DATES: Responses to this notice must be received by July 11, 2000.

FOR FURTHER INFORMATION CONTACT: Helen M. Galus, Patent Attorney, Langley Research Center, Mail Code 212, Hampton, VA 23681–2199; telephone 757–864–3227; facsimile 757–864–9190.

Dated: May 1, 2000.

Edward A. Frankle,

General Counsel.

[FR Doc. 00–11984 Filed 5–11–00; 8:45 am]

BILLING CODE 7510–01–P

NATIONAL AERONAUTICS AND SPACE ADMINISTRATION

[Notice 00–049]

Notice of Prospective Patent License

AGENCY: National Aeronautics and Space Administration.

ACTION: Notice of prospective patent license.

SUMMARY: NASA hereby gives notice that CyberLearning Technologies, Inc., of Plymouth Meeting, PA, has applied for an exclusive license to practice the inventions described and claimed in U.S. Patent Number 5,377,100, entitled ''A METHOD OF ENCOURAGING ATTENTION BY CORRELATING VIDEO GAME DIFFICULTY WITH ATTENTION LEVEL,'' and NASA Case No. LAR 15817–1, entitled ''A METHOD OF ENCOURAGING PHYSIOLOGICAL SELF-REGULATION THROUGH MODULATION OF AN OPERATOR'S CONTROL INPUT TO A VIDEO GAME OR TRAINING SIMULATOR,'' both of which are assigned to the United States of America as represented by the Administrator of the National Aeronautics and Space Administration. Written objections to the prospective grant of a license should be sent to Langley Research Center.

DATES: Responses to this notice must be received by July 11, 2000.

FOR FURTHER INFORMATION CONTACT: Helen M. Galus, Patent Attorney, Langley Research Center, Mail Code 212, Hampton, VA 23681–2199; telephone 757–864–3227; facsimile 757–864–9190.

Dated: May 1, 2000.

Edward A. Frankle,

General Counsel.

[FR Doc. 00–11983 Filed 5–11–00; 8:45 am]

BILLING CODE 7510–01–P

NATIONAL AERONAUTICS AND SPACE ADMINISTRATION

[Notice 00–048]

Notice of Prospective Patent License

AGENCY: National Aeronautics and Space Administration.

ACTION: Notice of prospective patent license.

SUMMARY: NASA hereby gives notice that East3.com, LLC, of Richmond, VA, has applied for an exclusive license to practice the inventions described and claimed in U.S. Patent Number 5,377,100, entitled ''A METHOD OF ENCOURAGING ATTENTION BY CORRELATING VIDEO GAME DIFFICULTY WITH ATTENTION LEVEL,'' and NASA Case No. LAR 15817–1, entitled ''A METHOD OF ENCOURAGING PHYSIOLOGICAL SELF-REGULATION THROUGH MODULATION OF AN OPERATOR'S CONTROL INPUT TO A VIDEO GAME OR TRAINING SIMULATOR,'' both of which are assigned to the United States of America as represented by the Administrator of the National Aeronautics and Space Administration. Written objections to the prospective grant of a license should be sent to Langley Research Center.

DATES: Responses to this notice must be received by July 11, 2000.

FOR FURTHER INFORMATION CONTACT: Helen M. Galus, Patent Attorney, Langley Research Center, Mail Code 212, Hampton, VA 23681–2199; telephone 757–864–3227; facsimile 757–864–9190.

Dated: May 1, 2000.

Edward A. Frankle,

General Counsel.

[FR Doc. 00–11982 Filed 5–11–00; 8:45 am]

BILLING CODE 7510–01–P

NATIONAL AERONAUTICS AND SPACE ADMINISTRATION

[Notice 00–047]

Notice of Prospective Patent License

AGENCY: National Aeronautics and Space Administration.

ACTION: Notice of prospective patent license.

SUMMARY: NASA hereby gives notice that Meridian Holdings, Inc., of Los Angeles, CA, has applied for a partially exclusive license to practice the inventions described and claimed in U.S. Patent Number 5,377,100, entitled ''A METHOD OF ENCOURAGING ATTENTION BY CORRELATING VIDEO GAME DIFFICULTY WITH ATTENTION LEVEL,'' and NASA Case No. LAR 15817–1, entitled ''A METHOD OF ENCOURAGING PHYSIOLOGICAL SELF-REGULATION THROUGH MODULATION OF AN OPERATOR'S CONTROL INPUT TO A VIDEO GAME OR TRAINING SIMULATOR,'' both of which are assigned to the United States of America as represented by the Administrator of the National Aeronautics and Space Administration. Written objections to the prospective grant of a license should be sent to Langley Research Center.

DATES: Responses to this notice must be received by July 11, 2000.

FOR FURTHER INFORMATION CONTACT: Helen M. Galus, Patent Attorney, Langley Research Center, Mail Code 212, Hampton, VA 23681–2199; telephone 757–864–3227; facsimile 757–864–9190.

Dated: May 1, 2000.

Edward A. Frankle,

General Counsel.

[FR Doc. 00–11981 Filed 5–11–00; 8:45 am]

BILLING CODE 7510–01–P

NATIONAL SCIENCE FOUNDATION

Notice of Permit Applications Received Under the Antarctic Conservation Act of 1978 (Public Law 95–541)

AGENCY: National Science Foundation.

ACTION: Notice of Permit Applications Received under the Antarctic Conservation Act of 1978, P.L. 95–541.

SUMMARY: The National Science Foundation (NSF) is required to publish notice of permit applications received to conduct activities regulated under the Antarctic Conservation Act of 1978. NSF has published regulations under the Antarctic Conservation Act at Title 45 Part 670 of the Code of Federal Regulations. This is the required notice of permit applications received.

DATES: Interested parties are invited to submit written data, comments, or views with respect to these permit applications by June 11, 2000. Permit applications may be inspected by

interested parties at the Permit Office, address below.

ADDRESSES: Comments should be addressed to Permit Office, Room 755, Office of Polar Programs, National Science Foundation, 4201 Wilson Boulevard, Arlington, Virginia 22230.

FOR FURTHER INFORMATION CONTACT: Nadene G. Kennedy at the above address or (703) 306–1030.

SUPPLEMENTARY INFORMATION: The National Science Foundation, as directed by the Antarctic Conservation Act of 1978 (Public Law 95–541), has developed regulations that implement the ''Agreed Measures for the Conservation of Antarctic Fauna and Flora'' for all United States citizens. The Agreed Measures, developed by the Antarctic Treaty Consultative Parties, recommended establishment of a permit system for various activities in Antarctica and designation of certain animals and certain geographic areas a requiring special protection. The regulations establish such a permit system to designate Specially Protected Areas and Sites of Special Scientific Interest.

The applications received are as follows:

1. *Applicant:* Permit Application No. 2001–008, Norbert Wu, Norbert Wu Productions, 1065 Sinex Avenue, Pacific Grove, CA 93950.

Activity for Which Permit is Requested: Enter Antarctic Specially Protected Area. The applicant is part of the Artists and Writers Program of the U.S. Antarctic Program. He proposes to enter the outskirts of Cape Crozier (ASPA #124) to conclude filming that are initiated last season under his grant, ''A Photographic Survey of Antarctic Marine Species'' and to finish a PBS Nature documentary entitled ''Under Antarctic Ice''. The applicant plans to conduct general photography and filming of Adelie and Emperor penguins, leopard seals, Orcas and minke whales. Filming will be restricted to topside photography and cinematography. Visits to the site will be selected to target Adelie penguin events (nesting, egg tending and egg hatching) during peak population at the rookery. The applicant plans to skirt the Adelie and Emperor penguin rookeries and not enter into the midst of the colony. Scientific research has shown that Adelie penguins are most active between 4:00am and 10:00am. Therefore the applicant intends to camp near Cape Crozier to take advantage of these timeframes. Access to the area will be by helicopter which will land at the designated landing site as outlined in the site's management plan.

Location: ASPA 124—Cape Crozier, Ross Island.

Dates: August 1, 2000 to February 28, 2001.

2. *Applicant:* Permit Application No. 2001–009, Terry J. Wilson, Department of Geological Sciences, Ohio State University, 125 South Oval Mall, Columbus, OH 43210.

Activity for Which Permit is Requested: Enter Antarctic Specially Protected Area. Cope Crozier is the largest ice-free volcanic area on Ross Island, with a large number of well exposed volcanic cones and fissures. It is a primary site for mapping volcanic alignments and stress directions in eastern Ross Island. The applicant plans to conduct aerial observations and photography of the volcanic vents using a helicopter. In addition, the applicant plans to conduct short-duration ground observations on selected cones. The objectives of the research can be achieved without flying over or entering the immediate proximity of the Adelie and Emperor penguin rookeries at Cape Crozier.

Location: ASPA 124—Cape Crozier, Ross Island.

Dates: December 4, 2000 to January 4, 2001.

3. *Applicant:* Permit Application No. 2001–010, Tom Yelvington, Raytheon Polar Service Company, 61 Inverness Drive East, Suite 300 Englewood, CO 80112.

Activity for Which Permit is Requested: Enter Antarctic Specially Protected Area. The applicant proposes to enter Byers Peninsula (ASPA #126) on Livingston Island for the purpose of reconnoitering landing sites and camp sites along the southern shores. Byers Peninsula is a key site of interest for a scientific project that will be conducted March 2001 through May 2001. Because of the uncertainties associated with zodiac-supported field camps, it is essential to ascertain in advance where the landings with the researchers and supplies might be made, and where the tent camp might be established. The reconnaissance of Byers Peninsula will be conducted during the next few months based on the schedule of the U.S. Antarctic Program's research vessel operating in the Peninsula. It is estimated that only 4–5 people will be needed to scout the southern shores for the appropriate sites.

Location: ASPA 126—Byers Peninsula, Livingston Island, South Shetland Islands.

Dates: June 1, 2000 to March 31, 2001.

Nadene G. Kennedy,

Permit Officer, Office of Polar Programs.

[FR Doc. 00–11963 Filed 5–11–00; 8:45 am]

BILLING CODE 7555–01–M

NATIONAL TRANSPORTATION SAFETY BOARD

Sunshine Act Meeting

''FEDERAL REGISTER'' CITATION OF PREVIOUS ANNOUNCEMENT: Vol. 65, No. 90/Tuesday, May 9, 2000.

PREVIOUSLY ANNOUNCED TIME AND DATE: 9:30 a.m., Tuesday, May 16, 2000.

CHANGE IN MEETING: A majority of the Board Members determined by recorded vote that the business of the Board required deleting the following item from the agenda at this time and that no earlier announcement was possible.

7256 Special Investigation Report: Actions to Reduce Fatalities, Injuries, and Crashes Involving the Hard Core Drinking Driver.

FOR MORE INFORMATION CONTACT: Rhonda Underwood, (202) 314–6065.

Dated: May 10, 2000.

Rhonda Underwood,

Federal Register Liaison Officer.

[FR Doc. 00–12178 Filed 5–10–00; 3:48 pm]

BILLING CODE 7533–01–M

NUCLEAR REGULATORY COMMISSION

[Docket No. 50–344]

Portland General Electric Company, et al.; Trojan Nuclear Plant; Notice of Consideration of Approval of Application Regarding Sierra Pacific Resources Purchase of Portland General Electric and Opportunity for a Hearing

The U.S. Nuclear Regulatory Commission (NRC) is considering the issuance of an order under 10 CFR 50.80 and 10 CFR 72.50 approving the indirect transfer of Facility Operating License No. NFP–1 for the Trojan Nuclear Plant (TNP) and Materials License No. SNM–2509 for the TNP Independent Spent Fuel Storage Installation (ISFSI) located in Columbia County, Oregon, on the west bank of the Columbia River.

According to an application for approval filed by Portland General Electric Company (PGE, the licensee), Sierra Pacific Resources (SPR) is considering the purchase of all of the common stock of PGE from Enron Corporation. PGE, currently a wholly

owned subsidiary of Enron Corporation, would become a wholly-owned subsidiary of SPR, thereby effecting an indirect transfer of Enron's interest in the TNP and ISFSI licenses to SPR. No physical changes to the TNP or ISFSI or operational changes are being proposed in the application. No direct transfer of the licenses for the facility and the ISFSI would result from the ownership transfer.

Pursuant to 10 CFR 50.80 and 10 CFR 72.50, no license, or any right thereunder, shall be transferred, directly or indirectly, through transfer of control of the license, unless the Commission shall give its consent in writing. The Commission will approve an application for the indirect transfer of a facility or ISFSI license, if the Commission determines that the proposed transfer of control will not affect the qualifications of the holder of the license, and that the transfer is otherwise consistent with applicable provisions of law, regulations, and orders issued by the Commission pursuant thereto.

The filing of requests for hearing and petitions for leave to intervene, and written comments with regard to the license transfer application, are discussed below.

By June 1, 2000, any person whose interest may be affected by the Commission's action on the application may request a hearing, and, if not the applicants, may petition for leave to intervene in a hearing proceeding on the Commission's action. Requests for a hearing and petitions for leave to intervene should be filed in accordance with the Commission's rules of practice set forth in Subpart M, ''Public Notification, Availability of Documents and Records, Hearing Requests and Procedures for Hearings on License Transfer Applications,'' of 10 CFR Part 2. In particular, such requests and petitions must comply with the requirements set forth in 10 CFR 2.1306, and should address the considerations contained in 10 CFR 2.1308(a). Untimely requests and petitions may be denied, as provided in 10 CFR 2.1308(b), unless good cause for failure to file on time is established. In addition, an untimely request or petition should address the factors that the Commission will also consider, in reviewing untimely requests or petitions, set forth in 10 CFR 2.1308(b)(1)–(2).

Requests for a hearing and petitions for leave to intervene should be served upon Mary A. Murphy, Esq., counsel for, Leboeuf, Lamb, Green, and MacRae L.L.P., 1875 Connecticut Avenue, Washington, D.C. 20009–5728; George M. Galloway, Esq., counsel for, Stoel Rives L.L.P., Standard Insurance Center, 900 SW Fifth Avenue, Suite 2300, Portland, OR 97204-1268; the General Counsel, U.S. Nuclear Regulatory Commission, Washington, DC 20555 (e-mail address for filings regarding license transfer cases only: OGCLT@NRC.GOV); and the Secretary of the Commission, U.S. Nuclear Regulatory Commission, Washington, DC 20555-0001, Attention: Rulemakings and Adjudications Staff, in accordance with 10 CFR 2.1313.

The Commission will issue a notice or order granting or denying a hearing request or intervention petition, designating the issues for any hearing that will be held and designating the Presiding Officer. A notice granting a hearing will be published in the **Federal Register** and served on the parties to the hearing.

As an alternative to requests for hearing and petitions to intervene, by June 12, 2000, persons may submit written comments regarding the license transfer application, as provided for in 10 CFR 2.1305. The Commission will consider and, if appropriate, respond to these comments, but such comments will not otherwise constitute part of the decisional record. Comments should be submitted to the Secretary, U.S. Nuclear Regulatory Commission, Washington, DC 20555–0001, Attention: Rulemakings and Adjudications Staff, and should cite the publication date and page number of this **Federal Register** notice.

For further details with respect to this action, see the application dated January 13, 2000, and supplement dated January 20, 2000, which are available for public inspection at the Commission's Public Document Room, The Gelman Building, 2120 L Street, N.W, Washington, D.C. 20037, and accessible electronically through the ADAMS Public Electronic Reading Room link at the NRC Web site (http://www.nrc.gov).

Dated at Rockville, Maryland, this 8th day of May 2000.

For the Nuclear Regulatory Commission.

Richard F. Dudley,

Acting Chief, Decommissioning Section, Project Directorate IV and Decommissioning, Division of Licensing Project Management, Office of Nuclear Reactor Regulation.

[FR Doc. 00–11956 Filed 5–11–00; 8:45 am]

BILLING CODE 7590–01–P

OFFICE OF PERSONNEL MANAGEMENT

Privacy Act of 1974: New System of Records

AGENCY: Office of Personnel Management (OPM).

ACTION: Notice of a new system of records.

SUMMARY: OPM proposes to add a new system of records to its inventory of records systems subject to the Privacy Act of 1974 (5 U.S.C. 552a), as amended. This action is necessary to meet the requirements of the Privacy Act to publish in the **Federal Register** notice of the existence and character of records systems maintained by the agency (5 U.S.C. 552a(e)(4)).

DATES: The new system will be effective without further notice May 17, 2000, unless comments are received that would result in a contrary determination.

ADDRESSES: Send written comments to the Office of Personnel Management, ATTN: Mary Beth Smith-Toomey, Office of the Chief Information Officer, 1900 E Street, NW., Room 5415, Washington, DC 20415–7900.

FOR FURTHER INFORMATION CONTACT: Mary Beth Smith-Toomey, (202) 606–8358.

SUPPLEMENTARY INFORMATION: The Child Care Tuition Assistance Records system will collect family income data from OPM employees for the purpose of determining their eligibility for child care tuition assistance, and the amounts of the tuition assistance. It also will collect information from the employee's child care provider(s) for verification purposes, *e.g.,* that the provider is licensed. Collection of data will be by tuition assistance application forms submitted by employees.

U.S. Office of Personnel Management.

Janice R. Lachance,

Director.

OPM/Internal–15

SYSTEM NAME:

OPM Child Care Tuition Assistance Records.

SYSTEM LOCATION:

U. S. Office of Personnel Management, Office of Human Resources and EEO, 1900 E Street, NW., Room 1469, Washington, DC 20415.

CATEGORIES OF INDIVIDUALS COVERED BY THE SYSTEM:

Employees of the Office of Personnel Management who voluntarily apply for child care tuition assistance.

CATEGORIES OF RECORDS IN THE SYSTEM:

Application forms for child care tuition assistance containing personal information, including employee (parent) name, Social Security Number, grade, home and work numbers, addresses, telephone numbers, total

family income, names of children on whose behalf the parent is applying for tuition assistance, child's date of birth; information on child care providers used, including name, address, provider license number and State where issued, tuition cost, and provider tax identification number; and copies of IRS Form 1040 and 1040A for verification purposes.

AUTHORITY FOR MAINTENANCE OF THE SYSTEM:

Pub. L. 106–58, section 643 and E.O. 9397.

ROUTINE USES OF RECORDS MAINTAINED IN THE SYSTEM, INCLUDING CATEGORIES OF USERS AND THE PURPOSES OF SUCH USES:

Routine uses 1, and 3 through 11 of the Prefatory Statement at the beginning of OPM's system notices (60 FR 63075, effective January 17, 1996) applies to the records maintained within the system. There are no system unique routine uses.

PURPOSE:

To establish and verify OPM employees' eligibility for child care subsidies in order for OPM to provide monetary assistance to its employees.

POLICIES AND PRACTICES FOR STORING, RETRIEVING, ACCESSING, RETAINING, AND DISPOSING OF RECORDS IN THE SYSTEM:

Storage:

Information may be collected on paper or electronically and may be stored as paper forms or on computers.

RETRIEVABILITY:

By name; may also be cross-referenced to Social Security Number.

SAFEGUARDS:

When not in use by an authorized person, paper records are stored in lockable file cabinets or secured rooms. Electronic records are protected by the use of passwords.

RETENTION AND DISPOSAL:

Disposition of records is according to the National Archives and Records Administration (NARA) guidelines.

SYSTEM MANAGER AND ADDRESS:

Director, Office of Human Resources and EEO, Office of Personnel Management, 1900 E Street, NW., Washington, DC 20415.

NOTIFICATION PROCEDURE:

Individuals may submit a request on whether a system contains records about them to the system manager indicated. Individuals must furnish the following for their records to be located and identified:

Full name.

Social Security Number.

RECORD ACCESS PROCEDURE:

Individuals wishing to request access to records about them should contact the system manager indicated. Individuals must provide the following information for their records to be located and identified:

Full name.

Social Security Number.

Individuals requesting access must also follow the OPM's Privacy Act regulations regarding verification of identity and access to records (5 CFR part 297).

CONTESTING RECORD PROCEDURE:

Individuals wishing to request amendment of records about them should contact the system manager indicated. Individuals must furnish the following information for their records to be located and identified:

Full name.

Social Security Number.

Individuals requesting amendment must also follow the OPM's Privacy Act regulations regarding verification of identity and amendment of records (5 CFR part 297).

RECORD SOURCE CATEGORIES:

Information is provided by OPM employees who apply for child care tuition assistance. Furnishing of the information is voluntary.

[FR Doc. 00–12054 Filed 5–11–00; 8:45 am]

BILLING CODE 6325–01–P

SECURITIES AND EXCHANGE COMMISSION

Existing Collection; Comment Request

Upon Written Request, Copies Available From: Securities and Exchange Commission, Office of Filings and Information Services, Washington, D.C. 20549.

Extension: Rule 17g–1, SEC File No. 270–208, OMB Control No. 3235–0213.

Notice is hereby given that, pursuant to the Paperwork Reduction Act of 1995 [44 U.S.C. 3501–3520], the Securities and Exchange Commission (the ''Commission'') is soliciting comments on the collection of information summarized below. The Commission plans to submit this existing collection of information to the Office of Management and Budget for extension and approval.

Rule 17g–1 [17 CFR 270.17g–1] under the Investment Company Act of 1940 (the ''Act'') governs the fidelity bonding of officers and employees of registered management investment companies (''funds'') and their advisers. Rule 17g–1 requires, in part, the following:

- Independent Directors' Approval Requirements. At least annually, the independent directors of a fund must approve the form and amount of the fund's fidelity bond. Rule 17g–1 provides a schedule of minimum amounts for fidelity bonds based on a fund's size. The independent directors also must approve the amount of any premium paid for any ''joint bond'' covering multiple funds or certain other affiliates of the fund.

- Fidelity Bond Content Requirements. The fidelity bond must provide that it shall not be canceled, terminated or modified except upon 60-days written notice to the affected party and to the Commission. In the case of a joint bond, this 60-day notice also must be given to each fund and to the Commission. In addition, a joint bond must provide that the fidelity insurance company will provide all funds covered by the bond with (i) A copy of the bond and any amendments to the bond; (ii) a copy of any formal filing of a claim on the bond; and (iii) notification of the terms of the settlement on any claim prior to execution of that settlement.

- Joint Bond Agreement Requirement. A fund that is insured by a joint bond must enter into an agreement with all other parties insured by the joint bond regarding recovery under the joint bond.

- Required Filings with the Commission. Upon execution of a fidelity bond or any amendment thereto, a fund must file with the Commission a copy of: (i) The executed fidelity bond; (ii) the resolution of the fund's independent directors approving the fidelity bond; and (iii) a statement as to the period for which the fidelity bond premiums have been paid. In the case of a joint bond, a fund also must file a copy of: (i) A statement showing the amount of a single insured bond the fund would have maintained under the rule had it not been named under a joint bond; and (ii) each agreement between the fund and all other insured parties. A fund also must notify the Commission in writing within 5 days of any claim and settlement on a claim made under a fidelity bond.

- Required Notices to Directors. A fund must notify by registered mail each member of its board of directors of (i) any cancellation, termination or modification of the fidelity bond at least 45 days prior to the effective date; and (ii) the filing or settlement of any claim under the fidelity bond when the notification is filed with the Commission.

Rule 17g–1's independent directors' annual requirements, fidelity bond content requirements, joint bond agreement requirement and the required notices to directors seek to ensure the safety of fund assets against losses due to the conduct of persons who may obtain access to those assets. These requirements also seek to facilitate oversight of a fund's fidelity bond. The rule's required filings with the Commission are designed to assist the Commission in monitoring funds' compliance with the fidelity bond requirements.

The Commission staff estimates that approximately 3500 funds are subject to the requirements of rule 17g–1, and that on average a fund spends approximately one hour per year complying with the rule's paperwork requirements. The Commission staff therefore estimates the total annual burden of the rule's paperwork requirements to be 3500 hours.

These estimates of average burden hours are made solely for the purposes of the Paperwork Reduction Act. These estimates are not derived from a comprehensive or even a representative survey or study of Commission rules. The collection of information required by rule 17g–1 is mandatory and will not be kept confidential. An agency may not conduct or sponsor, and a person is not required to respond to, a collection of information unless it displays a currently valid control number.

Written comments are requested on: (a) Whether the collection of information is necessary for the proper performance of the functions of the Commission, including whether the information has practical utility; (b) the accuracy of the Commission's estimate of the burden of the collection of information; (c) ways to enhance the quality, utility and clarity of the information collected; and (d) ways to minimize the burden of the collection of information on respondents, including through the use of automated collection techniques or other forms of information technology. Consideration will be given to comments and suggestions submitted in writing within 60 days of this publication.

Please direct your written comments to Michael E. Bartell, Associate Executive Director, Office of Information Technology, Securities and Exchange Commission, 450 5th Street, N.W., Washington, D.C. 20549.

Dated: May 4, 2000.

Margaret H. McFarland,

Deputy Secretary.

[FR Doc. 00–11917 Filed 5–11–00; 8:45 am]

BILLING CODE 8010–01–M

SECURITIES AND EXCHANGE COMMISSION

Proposed Collection; Comment Request

Upon Written Request, Copies Available From: Securities and Exchange Commission, Office of Filings and Information Services, Washington, DC 20549.

Extension: Rule 17Ad–4(b) & (c), SEC File No. 270–264, OMB Control No. 3235–0341, Rule 17Ad–15, SEC File No. 270–360, OMB Control No. 3235–0409.

Notice is hereby given that pursuant to the Paperwork Reduction Act of 1995 (44 U.S.C. 3501 *et seq.*) the Securities and Exchange Commission (''Commission'') is soliciting comments on the collections of information summarized below. The Commission plans to submit these existing collections of information to the Office of Management and Budget for extension and approval.

Rule 17Ad–4(b) & (c) Notices Regarding Exempt Transfer Agent Status

Rule 17Ad–4(b) & (c) is used to document when transfer agents are exempt, or no longer exempt, from the minimum performance standards and certain recordkeeping provisions of the Commission's transfer agent rules. Rule 17Ad–4(c) sets forth the conditions under which a registered transfer agent loses its exempt status. Once the conditions for exemption no longer exist, the transfer agent, to keep the appropriate regulatory authority (''ARA'') apprised of its current status, must prepare, and file if the ARA for the transfer agent is the Board of Governors of the Federal Reserve System (''BGFRS'') or the Federal Deposit Insurance Corporation (''FDIC''), a notice of loss of exempt status under paragraph (c). The transfer agent then cannot claim exempt status under Rule 17Ad–4(b) again until it remains subject to the minimum performance standards for non-exempt transfer agents for six consecutive months. The ARAs use the information contained in the notice to determine whether a registered transfer agent qualifies for the exemption, to determine when a registered transfer agent no longer qualifies for the exemption, and to determine the extent to which that transfer agent is subject to regulation.

The BGFRS receives approximately twelve notices of exempt status and six notices of loss of exempt status annually. The FDIC receives approximately eighteen notices of exempt status and three notices of loss of exempt status annually. The Commission and the Office of the Comptroller of the Currency (''OCC'') do not require transfer agents to file notice of exempt status or loss of exempt status. Instead, transfer agents whose ARA is the Commission or OCC need only to prepare and maintain these notices. The Commission estimates that approximately sixteen notices of exempt status and loss of exempt status are prepared annually by transfer agents whose ARA is the Commission. Similarly, the OCC estimates that the transfer agents for which it is the ARA, prepare and maintain approximately fifteen notices of exempt status and loss of exempt status annually. Thus, a total of approximately seventy notices of exempt status and loss of exempt status are prepared and maintained by transfer agents annually. Of these seventy notices, approximately forty are filed with an ARA. Any additional costs associated with filing such notices would be limited primarily to postage, which would be minimal. Since the Commission estimates that no more than one-half hour is required to prepare each notice, the total annual burden to transfer agents is approximately thirty-five hours. The average cost per hours is approximately $30. Therefore, the total cost of compliance to the transfer agent community is $1,050.

Transfer agents should prepare and maintain in its possession or file with its ARA notice of exempt status or loss of exempt status for the period of the exemption or loss of exemption. When the transfer agent's status changes, the transfer agent should file a notice of exempt status or loss of exempt status reflecting that change. The notice requirement is mandatory to determine when a registered transfer agent no longer qualifies for the exemption, and to determine the extent to which that transfer agent is subject to regulation. Notices submitted according to Rule 17Ad–4(b) & (c) will not be kept confidential.

Rule 17Ad–15 Signature Guarantees

Rule 17Ad–15 requires approximately 1,093 transfer agents to establish written standards for the acceptance or rejection of guarantees of securities transfers from eligible guarantor institutions. Transfer agents are required to establish procedures to ensure that those standards are used by the transfer agent to determine whether to accept or reject guarantees from eligible guarantor institutions. Transfer agents must maintain, for a period of three years following the date of a rejection of transfer, a record of all transfers rejected, along with the reason for the

rejection, identification of the guarantor, and whether the guarantor failed to meet the transfer agent's guarantee standard. These recordkeeping requirements assist the Commission and other regulatory agencies with monitoring transfer agents and ensuring compliance with the rule.

There are approximately 1,093 registered transfer agents. Of the 1,093 registered transfer agents, proximately 120 will receive fewer than 100 items for transfer. The staff expects that most small transfer agents will have few, if any, rejections. The staff estimates that every transfer agent will spend about 40 hours annually to comply with Rule 17Ad–15. The total annual burden for all transfer agents is 43,720 hours. The average cost per hour is approximately $30. Therefore, the total cost of compliance for all transfer agents is $1,311,600.

Please note that an agency may not conduct or sponsor, and a person is not required to respond to, a collection of information unless it displays a currently valid control number.

Written comments are invited on: (a) Whether the proposed collection of information is necessary for the proper performance of the functions of the agency, including whether the information will have practical utility; (b) the accuracy of the agency's estimate of the burden of the collection of information; (c) ways to enhance the quality, utility, and clarity of the information collected; and (d) ways to minimize the burden of the collection of information on respondents, including through the use of automated collection techniques or other forms of information technology. Consideration will be given to comments and suggestions submitted in writing within 60 days of this publication.

Please direct your written comments to Michael E. Bartell, Associate Executive Director, Office of Information Technology, Securities and Exchange Commission, 450 5th Street, NW, Washington, DC 20549.

Dated: May 1, 2000.

Margaret H. McFarland,

Deputy Secretary.

[FR Doc. 00–11918 Filed 5–11–00; 8:45 am]

BILLING CODE 8010–01–M

SECURITIES AND EXCHANGE COMMISSION

[Rel. No. IC–24447: File No. 812–12006]

Allianz Life Insurance Company of North America, et al.; Notice of Application

May 8, 2000.

AGENCY: Securities and Exchange Commission (''SEC'' or ''Commission'').

ACTION: Notice of application for an order under Section 6(c) of the Investment Company Act of 1940, as amended (the ''1940 Act'' or ''Act'') granting exemptions from the provisions of Sections 2(a)(32), 22(c), and 27(i)(2)(A) of the 1940 Act and Rule 22c–1 thereunder to permit the recapture of bonus amounts applied to purchase payments made under certain deferred variable annuity contracts.

Summary of Application. Applicants seek an order under Section 6(c) of the Act to the extent necessary to permit the issuance and, under specified circumstances, the subsequent recapture of unvested bonuses applied to purchase payment made under (i) certain deferred variable annuity contracts that Allianz Life Insurance Company of North America (''Allianz Life'') will issue through Allianz Life Variable Account B (''Variable Account B'') (the contracts, including certain contract data pages, endorsements and riders, are collectively referred to herein as the ''Contracts''), and (ii) contracts that Allianz Life may issue in the future through Variable Account B or any Future Accounts that are substantially similar in all material respects to the Contracts (the ''Future Contracts''). Applicants also request that the order being sought extend to any other National Association of Securities Dealers, Inc. (''NASD'') member broker-dealer controlling or controlled by, or under common control with, Allianz Life, whether existing or created in the future, that serves as a distributor or principal underwriter for the Contracts or Future Contracts (collectively ''Allianz Life Broker-Dealers'').

Applicants: Allianz Life Insurance Company of North America, Allianz Life Variable Account B, any other separate account established by Allianz Life in the future to support certain deferred variable annuity contracts issued by Allianz Life (''Future Accounts'') and USAllianz Investor Services, LLC (''USAIS'') (collectively, ''Applicants'').

Filing Date: The application was filed on February 29, 2000.

Hearing or Notification of Hearing: An order granting the application will be issued unless the SEC orders a hearing. Interested persons may request a hearing by writing to the SEC's Secretary and serving Applicants with a copy of the request, in person or by mail. Hearing requests should be received by the SEC by 5:30 p.m. on June 2, 2000, and should be accompanied by proof of service on the Applicants, in the form of an affidavit or, for lawyers, a certificate of service. Hearing requests should state the nature of the writer's interest, the reason for the request, and the issues contested. Persons who wish to be notified of a hearing may request notification by writing to the Secretary of the SEC.

ADDRESSES: Secretary, Securities and Exchange Commission, 450 Fifth Street, NW, Washington, DC 20549–0609. Applicants, c/o Lynn Stone, Esq., Blazzard, Grodd & Hasenauer, P.C., 943 Post Road East, Westport, CT 06880.

FOR FURTHER INFORMATION CONTACT: Keith A. O'Connell, Senior Counsel, or Keith E. Carpenter, Branch Chief, Office of Insurance Products, Division of Investment Management, at (202) 942–0670.

SUPPLEMENTARY INFORMATION: The following is a summary of the application. The complete application is available for a fee from the SEC's Public Reference Branch, 450 Fifth St., NW, Washington, DC 20549–0102 (tel. (202) 942–8090).

Applicant's Representations

1. Allianz Life was organized under the laws of the state of Minnesota in 1896. Allianz Life offers fixed and variable life insurance and annuities and group life, accident and health insurance. Allianz Life is licensed to do business in 49 states and the District of Columbia. Allianz Life is a wholly-owned subsidiary of Allianz Verischerungs-AG Holding. Allianz Life serves as depositor for Variable Account B. Allianz Life may in the future establish one or more Future Accounts for which it will serve as depositor.

Variable Account B is a segregated asset account of Allianz Life. Variable Account B is registered with the Commission as a unit investment trust under the Act. Variable Account B filed a Form N–8A Notification of Registration under the 1940 Act on July 13, 1988. Variable Account B will fund the variable benefits available under the Contracts funded through it. Units of interest in Variable Account B will be registered under the Securities Act of 1933 (the ''1933 Act''). In that regard, Variable Account B filed a Form N–4 Registration Statement on January 31, 2000 under the 1933 Act relating to the Contracts. Allianz Life may in the future

issue Future Contracts through Variable Account B or through Future Accounts. That portion of the assets of Variable Account B that is equal to the reserves and other Contract liabilities with respect to Variable Account B is not chargeable with liabilities arising out of any other business of Allianz Life. Any income, gains or losses, realized or unrealized, from assets allocated to Variable Account B are, in accordance with Variable Account B's Contracts, credited to or charged against Variable Account B, without regard to other income, gains or losses of Allianz Life.

3. USAIS (formerly NALAC Financial Plans, LLC) is a wholly-owned subsidiary of Allianz Life and will act as the distributor of the Contracts funded through Variable Account B. USAIS is registered with the Commission as a broker-dealer under the Securities Exchange Act of 1934 (the ''1934 Act'') and is a member of the NASD. The Contracts will be offered through unaffiliated broker-dealers who have entered into agreements with USAIS. All such unaffiliated broker-dealers will be registered broker-dealers under the 1934 Act and NASD members. USAIS, or any successor entity, may act as principal underwriter for any Future Accounts and distributor for any Future Contracts issued by Allianz Life.

4. The Contract is a flexible purchase payment variable deferred annuity contract with a fixed account option. The Contract may be issued under a qualified plan, or as a non-qualified contract. The Contract is designed to provide for the accumulation of assets during the accumulation phase through investment in various investment choices, and income during the payout phase. Contract Owners may make purchase payments at any time during the accumulation phase. The minimum initial purchase payment is $15,000. The maximum amount of purchase payments that Allianz Life will accept from a Contract Owner without prior approval is $1,000,000. Additional purchase payments of at least $250 can be made ($100 under the automatic investment plan).

5. The Contract provides that a Contract Owner may cancel the Contract within 10 days after receipt (or for a longer period in states where required). This is referred to as the ''Free Look Period.'' Allianz Life will refund the Contract Owner's Contract value (less any Bonus payments) as of the date it receives the request for cancellation. In certain states, or if the Contract is purchased as an Individual Retirement Annuity, Allianz Life will refund purchase payments made by the Contract Owner.

6. Contract owners can allocate purchase payments to sub-accounts of Variable Account B and to a fixed account (''Fix Account''), where available, offered by Allianz Life.

7. Contract owners can currently allocate money to 37 sub-accounts of Variable Account B. Each sub-account will invest in shares of a corresponding fund or portfolio of various underlying investment companies (''Funds''). The sub-accounts and the Fixed Account will comprise the initial investment options under the Contract.

8. The Variable Account B sub-accounts currently invest in shares of the following Funds: AIM Variable Insurance Funds, Inc., advised by A I M Advisors, Inc.; The Alger American Fund, advised by Fred Alger Management, Inc.; Davis Variable Account Fund, Inc., advised by Davis Selected Advisers, LP; Franklin Templeton Variable Insurance Products Trust, advised by Franklin Advisers Inc., Franklin Mutual Advisers, LLC, Franklin Advisory Services, LLC, Templeton Asset Management Ltd., and Templeton Global Advisors Limited (depending upon the portfolio); JP Morgan Series Trust II, advised by J.P. Morgan Investment Management Inc.; Oppenheimer Variable Account Funds, advised by Oppenheimer Funds, Inc.; PIMCO Variable Insurance Trust, advised by Pacific Investment Management Company; Seligman Portfolios, Inc., advised by J & W Seligman & Co. Incorporated; USAllianz Variable Insurance Products Trust, advised by Allianz of America, Inc.; and Van Kampen Life Investment Trust, advised by Van Kampen Asset Management Inc. The Funds are registered under the 1940 Act and the shares are registered under the 1933 Act. The Fixed Account is not registered with the Commission.

9. Allianz Life, at a later date, may determine to create additional sub-accounts of Variable Account B to invest in any additional underlying portfolios or other investments as may now or in the future be available. Similarly, sub-accounts of Variable Account B may be discontinued, combined or eliminated from time to time.

10. The Contract provides for transfer privileges among investment options, dollar cost averaging, flexible rebalancing, asset allocation and other features. The following charges are assessed under the Contract: (i) Annual asset-based charges as follows: 1.50% for mortality and expense risks if the Owner selects the traditional death benefit and 1.70% if the Owner selects the enhanced death benefit, plus .15% for administration expenses; (ii) a contingent deferred sales charge with starts at 8.5% in the first year, and declines thereafter to 0% after 10 years with a 10% of purchase payments free surrender option; (iii) a $40 contract maintenance charge; (iv) a transfer fee of $25 for each transfer in excess of 12 in a Contract year; and (v) a commutation fee assessed against liquidations when certain annuity options are selected which starts at 7% in the first year following the income date and declines to 1% after 6 years following the income date. The Funds also impose management fees and operating expenses that vary depending upon which portfolio is selected.

11. The Contract offers a selection of death benefits—a Contract Owner can select the traditional death benefit or the enhanced death benefit. The traditional death benefit is equal to the greater of: (1) The Contract value determined as of the end of the business day on which due proof of death and an election of payment method is received by Allianz Life; or (2) the guaranteed minimum death benefit which is equal to the total of all purchase payments made reduced proportionately by the percentage of Contract value surrendered, including any contingent deferred sales charge. If selected, the enhanced death benefit is equal to the greater of: (1) The Contract value determined as of the end of the business day on which due proof of death and an election of payment method is received by Allianz Life; or (2) the guaranteed minimum death benefit which is equal to the greater of: (a) The total of all purchase payments made reduced proportionately by the percentage of the Contract value surrendered, including any contingent deferred sales charge assessed; or (b) the greatest anniversary value which is equal to the Contract value on a Contract anniversary, increased by additional purchase payments and reduced proportionately by the percentage of the Contract value surrendered, including any contingent deferred sales charge assessed, since that Contract anniversary. Contract anniversaries occurring on or after the Contract Owner's 81st birthday of date of death will not be taken into consideration in determining the enhanced death benefit.

12. Prior to the Contract Owner's/joint owner's 81st birthday, Allianz Life will credit each purchase payment made with a bonus (''Bonus''). The amount of the Bonus rate is based on the total amount of purchase payments made at the time of the contribution, less any surrenders and applicable contingent

deferred sales charges. The Bonus rates are: 4% of the purchase payment with total purchase payments (less surrenders and related contingent deferred sales charges) of less than $25,000; 5% of the purchase payment with total purchase payments (less surrenders and related contingent deferred sales charges) of $25,000–$99,9999; 6% of the purchase payment with total purchase payments (less surrenders and related contingent deferred sales charges) of $100,000–$999,999; 7% of the purchase payment with total purchase payments (less surrenders and related contingent deferred sales charges) of $1,000,000–$4,999,999; 8% of the purchase payment with total purchase payments (less surrenders and related contingent deferred sales charges) of $5,000,000 or greater. Allianz Life will fund the Bonus from its general account assets and will allocate the Bonus to the Fixed Account and/or the sub-accounts of Variable Account B in the same proportion as the purchase payment. Allianz Life reserves the right to increase the Bonus rights, up to 10% of the purchase payment. In addition, Allianz Life reserves the right to vary the break points amounts relating to the Bonus rates.

13. A Contract Owner has access to funds by making either a partial or complete surrender, or by electing to receive annuity payments. A beneficiary will have access to the money in the Contract when a death benefit is paid. Any partial surrender must be for at least $500 (except under the Minimum Distribution Program). A Contract Owner may elect to receive annuity payments under the six available annuity options. An Owner may not annuitize until three years after the issue date.

14. Bonus amounts are available for surrender, annuitization, payment of death benefits (which will never be less than the minimum guaranteed death benefit) only when such amounts become vested. Allianz Life will recapture any unvested Bonus upon surrender, annuitization or payment of a death benefit (if Contract value is the greater of the values). Bonuses vest as follows: 0%—up through 12 completed months from the date of purchase payment; 35%—at least 12 and through 24 completed months from date of purchase payment; 70%—at least 24 months and through 36 completed months from date of purchase payment; 100%—at least 36 completed months from date of purchase payment. Regardless of whether the Bonus is vested, all gains or losses attributable to such Bonus are part of the Owner's Contract value and are always 100% vested. All Bonuses, and any gains or losses attributable to a Bonus are treated as earnings under the Contract for tax purposes.

15. Applicants seek exemption pursuant to Section 6(c) from Sections 2(a)(32), 22(c) and 27(i)(2)(A) of the Act and Rule 22c–1 thereunder to the extent necessary to permit Allianz Life to issue Contracts and Future Contracts that provide for the recapture of any unvested Bonus in the following instances: (i) When the Contract that provide for the recapture of any unvested Bonus in the following instances: (i) when the Contract Owner makes either a partial or full surrender (including during the Free-Lock Period) within 36 complete months after a purchase payment is made, Allianz Life will recapture the unvested Bonus (according to the vesting schedule set forth above); (ii) if an Owner annutizes within 36 complete months after a purchase payment is made, Allianz Life will recapture the unvested Bonus (according to the vesting schedule set forth above) before the Contract value is applied to an annuity option; and (iii) when a death benefit becomes payable within 36 complete months of a purchase payment, Allianz Life will recapture the unvested Bonus (according to the vesting schedule set forth above) from the Contract value used in the death benefit calculation (in no event will the death benefit be less than the guaranteed minimum death benefit).

16. Partial surrenders in excess of the 10% of purchase payments free surrender option (''Partial Surrender Privilege'') will reduce unvested Bonuses by such excess amount's percentage of the Contract value at the time of the surrender. This percentage is determined by dividing the amount of the partial surrender (including any contingent deferred sales charge) in excess of the Partial Surrender Privilege amount by the Contract value. If there are multiple bonuses applied to a Contract, Allianz Life will reduce the oldest unvested bonus first.

Applicants' Legal Analysis

1. Section 6(c) of the Act authorizes the Commission to exempt any person, security or transaction, or any class or classes of persons, securities or transactions from the provisions of the Act and rules promulgated thereunder if and to the extent that such exemption is necessary or appropriate in the public interest and consistent with the protection of investors and the purposes fairly intended by the policy and provisions of the Act. Applicants request that the Commission, pursuant to Section 6(c) of the Act grant the exemptions requested below with respect to the Contract, and any Future Contracts funded by Variable Account B that are issued by Allianz Life and underwritten or distributed by USAIS or Allianz Life Broker-Dealers. Applicants undertake the Future Contracts funded by Variable Account B or any Future Account will be substantially similar in all material respects to the Contract. Applicants believe that the requested exemptions are appropriate in the public interest and consistent with the protection of investors and the purposes fairly intended by the policy and provisions of the Act.

2. Applicants represent that it is not administratively feasible to track the Bonus in Variable Account B after the Bonus is applied. Accordingly, the asset-based charges applicable to Variable Account B will be assessed against the entire amount held in Variable Account B, including the Bonus during the 36-month period following a purchase payment preceding certain events (*i.e.,* surrender, annuitization and payment of a death benefit). As a result, the aggregate asset-based charges assessed will be higher than those that would be charged if the Contract Owner's Contract value did not include the Bonus.

3. Subsection (i) of Section 27 provides that Section 27 does not apply to any registered separate account funding variable insurance contracts, or to the sponsoring insurance company and principal underwriter of such account, except as provided in paragraph (2) of the subsection. Paragraph (2) provides that it shall be unlawful for such a separate account or sponsoring insurance company to sell a contract funded by the registered separate account unless ''(A) such contract is a redemable security.'' Section 2(a)(32) defines '' ''redeemable security'' as any security, other than short-term paper, under the terms of which the holder, upon presentation to the issuer, is entitled to receive approximately his proportionate share of the issuer's current net assets, or the cash equivalent thereof.

4. Applicants submit that the Bonus recapture provisions described in this application would not deprive a Contract Owner of his or her proportionate share of the issuer's current net assets. A Contract Owner's interest in the Bonus allocated to his or her Contract value upon receipt of a purchase payment is not 100% vested until the completion of 36 months following a purchase payment. Until or unless the Bonus is vested, Allianz Life retains the right and interest in the

Bonus, although not in the earnings attributable to that amount. Thus, when Allianz Life recaptures any unvested Bonus it is simply retrieving its own assets, and because a Contract Owner's interest in the Bonus is not 100% vested until the completion of 36 months, the Contract Owner has not been deprived of a proportionate share of Variable Account B assets, *i.e.,* a share of Variable Account B's assets proportionate to the Contract Owner's Contract value (including the Bonus).

5. With respect to the recapture of the Bonus upon the exercise of the Free-Look privilege, it would be patently unfair to allow a Contract Owner exercising that privilege to retain the Bonus under a Contract that has been returned for a refund after a period of only a few days. If Allianz Life could not recapture the Bonus, individuals could purchase a Contract with no intention of retaining it, and simply return it for a quick profit. Furthermore, the recapture of the unvested Bonus relating to a surrender, annuitization or payment of a death benefit is designed to protect Allianz Life against Contract Owners making large purchase payments within 36 months of certain events. It would provide Allianz Life with insufficient time to recover the cost of the Bonus, to its financial detriment. Again, the amounts recaptured equal the unvested Bonus provided by Allianz Life from its own general account assets and any gain would remain part of the Contract value.

6. Applicants represent that the Bonus will be attractive to and in the interest of investors because it will permit Contract Owners to put between 104–108% of their purchase payments to work for them in the selected sub-accounts and the Fixed Account. Also, any earnings attributable to the Bonus will be retained by Contract Owners and the principal amount of the Bonus will be retained if the contingencies set forth in the application are satisfied.

7. Applicants state that Allianz Life's right to recapture unvested Bonus amounts applied to purchase payments made within 36 months of the payment of a surrender, annuitization or death benefit protects it against the risk that owners will contribute larger amounts as they approach certain events (if forseeable) to obtain the Bonus, while avoiding Contract charges over the long terms. With respect to refunds paid upon the return of Contract within the Free-Look Period, the amount payable by Allianz Life must be reduced by the allocated Bonus payment. Otherwise, Applicants state that purchasers could apply for contracts for the sole purpose of exercising the free-look provision and making a quick profit.

8. Applicants submit that the provisions for recapture of any applicable unvested Bonus under the Contracts do not, and any such Future Contract provisions will not, violate Section 2(a)(32) and 27(i)(2)(A) of the Act. Nevertheless, to avoid any uncertainties, Applicants request an exemption from those Sections, to the extent deemed necessary, to permit the recapture of any unvested Bonus under the circumstances summarized herein with respect to the Contracts and any Future Contracts, without the loss of the relief from Section 27 provided by Section 27(i).

9. Section 22(c) of the 1940 Act authorizes the Commission to make rules and regulations applicable to registered investment companies and to principal underwriters of, and dealers in, the redeemable securities of any registered investment company, whether or not members of any securities association, to the same extent, covering the same subject matter, and for the accomplishment of the same ends as prescribed in Section 22(a) in respect of the rules which may be made by a registered securities association governing its members. Rule 22c–1 thereunder prohibits a registered investment company issuing any redeemable security, a person designated in such issuer's prospectus as authorized to consummate transactions in any such security, and a principal underwriter of, or dealer in, such security, from selling, redeeming, or repurchasing any such security except at a price based on the current net asset value of such security which is next computed after receipt of a tender of such security for redemption or of an order to purchase or sell such security.

10. Arguably, Allianz Life's recapture of the unvested Bonus might be viewed as resulting in the redemption of redeemable securities for a price other than one based on the current net asset value of Variable Account B. Applicants contend, however, that recapture of the unvested Bonus is not violative of Section 22(c) and Rule 22c–1. Applicants argue that the recapture does not involve either of the evils that Rule 22c–1 was intended to eliminate or reduce, namely: (i) The dilution of the value of outstanding redeemable securities of registered investment companies through their sale at a price below net asset value or their redemption or repurchase at a price above it, and (ii) other unfair results including speculative trading practices. See Adoption of Rule 22c–1 under the 1940 Act, Investment Company Release No. 5519 (Oct. 16, 1968). To effect a recapture of an unvested Bonus, Allianz Life will redeem interests in an Owner's Contract value at a price determined on the basis of current net asset value of Variable Account.

B. The amount captured will equal the amount of the unvested Bonus that Allianz Life paid out of its general account assets. Although Owners will be entitled to retain any investment gain attributable to the Bonus, the amount of such gain will be determined on the basis of the current net asset value of Variable Account B. Thus, no dilution will occur upon the recapture of the unvested Bonus. Applicants also submit that the second harm that Rule 22c–1 was designed to address, namely, speculative trading practices calculated to take advantage of backward pricing, will not occur as a result of the recapture of the unvested Bonus. However, to avoid any uncertainty as to full compliance with the Act, Applicants request an exemption from the provisions of Section 22(c) and Rule 22c–1 to the extent deemed necessary to permit them to recapture the unvested Bonus under the Contracts and Future Contracts.

Conclusion

Applicants submit that their request for an order is appropriate in the public interest. Applicants state that such an order would promote competitiveness in the variable annuity market eliminating the need to file redundant exemptive applications, thereby reducing administrative expenses and maximizing the efficient use of Applicants' resources. Applicants argue that investors would not receive any benefit or additional protection by requiring Applicants to repeatedly seek exemptive relief that would present no issue under the Act that has not already been addressed in their application described herein. Applicants submit that having them file additional applications would impair their ability effectively to take advantage of business opportunities as they arise. Further, Applicants state that if they were required repeatedly to seek exemptive relief with respect to the same issues addressed in the application described herein, investors would not receive any benefit or additional protection thereby.

Applicants submit, based on the grounds summarized above, that their exemptive request meets the standards set out in Section 6(c) of the Act, namely, that the exemptions requested are necessary or appropriate in the public interest and consistent with the protection of investors and the purposes

fairly intended by the policy and provisions of the Act, and that, therefore, the Commission should grant the requested order.

For the Commission, by the Division of Investment Management, pursuant to delegated authority.

Margaret H. McFarland,

Deputy Secretary.

[FR Doc. 00–11959 Filed 5–11–00; 8:45 am]

BILLING CODE 8010–01–M

SECURITIES AND EXCHANGE COMMISSION

[Release No. 35–27174]

Filings Under the Public Utility Holding Company Act of 1935, As Amended (''Act'')

May 5, 2000.

Notice is hereby given that the following filing(s) has/have been made with the Commission pursuant to provisions of the Act and rules promulgated under the Act. All interested persons are referred to the application(s) and/or declaration(s) for complete statements of the proposed transaction(s) summarized below. The application(s) and/or declaration(s) and any amendment(s) is/are available for public inspection through the Commission's Branch of Public Reference.

Interested persons wishing to comment or request a hearing on the application(s) and/or declaration(s) should submit their views in writing by May 30, 2000, to the Secretary, Securities and Exchange Commission, Washington, DC 20549–0609, and serve a copy on the relevant applicant(s) and/or declarant(s) at the address(es) specified below. Proof of service (by affidavit or, in the case of an attorney at law, by certificate) should be filed with the request. Any request for hearing should identify specifically the issues of facts or law that are disputed. A person who so requests will be notified of any hearing, if ordered, and will receive a copy of any notice or order issued in the matter. After May 30, 2000, the application(s) and/declaration(s), as filed or as amended, may be granted and/or permitted to become effective.

Conectiv, et al. (70–9655)

Conectiv, a registered public utility holding company; Atlantic City Electric Company (''ACE''), and Delmarva Power & Light Company (''Delmarva''), each a public utility subsidiary of Conectiv; ACE–REIT, Inc. (''ACE–REIT''), Conectiv Atlantic Generation, LLC (''CAG''), nonutility subsidiaries of ACE; and Conectiv Delmarva Generation, Inc. (''CDG''), a nonutility subsidiary of Delmarva (collectively, ''Applicants''), all located at 800 King Street, Wilmington, Delaware 19899, have filed an application-declaration under sections 6(a), 7, 9(a), 10, 12(c), 12(d) and 32 of the Act and rules 43, 45, 46 and 54 under the Act.

Applicants state that Conectiv intends to convert Delmarva and ACE into subsidiaries that provide only regulated electric transmission and distribution services and, in the case of Delmarva, regulated gas distribution services. As part of this plan, Convectiv is implementing a strategy of divesting baseload generating facilities and retaining ''mid-merit'' facilities, *e.g.,* those facilities that can quickly increase or decrease their KW per hour output level on an economic basis. In connection with this strategy, Delmarva and ACE intend to transfer ownership of certain generating facilities to a special purpose holding company, Conectiv Energy Holding Company (''CEH''), that Conectiv proposes to establish and own, to hold these facilities. The Delmarva facilities have approximately 1,364 MW of net generating capacity, with an approximate value of $301.4 million net of deferred taxes (''Delmarva Generation Assets'').[1] The ACE facilities have approximately 502 MW of net generating capacity valued at approximately $77.2 million net of deferred taxes (''ACE Generation Assets''). Applicants request several authorizations to accomplish this transfer and for other related matters.

Transfer of ACE and Delmarva Generation Assets

ACE proposes to acquire additional ownership interests in its subsidiary, CAG, which is currently inactive, and to transfer the ACE Generation Assets to CAG, in exchange for those interests. ACE also requests authority to acquire additional common stock of its subsidiary, ACE–REIT, which is also inactive, and to transfer to ACE–REIT its ownership interest in CAG in exchange for that common stock.[2] ACE proposes to issue a dividend to Conectiv of ACE–REIT's common stock.

Similarly, Delmarva proposes to acquire additional common stock of its subsidiary, CDG, which is currently inactive, and to transfer the Delmarva Generation Assets to CDG in exchange for that common stock. Delmarva proposes to issue a dividend to Conectiv of CDG's common stock. In accordance with generally accepted accounting principles: The dividends by ACE of ACE–REIT common stock and by Delamarva of CDG common stock will be treated as dividends out of capital surplus.[3]

In addition, Conectiv requests authority to establish and acquire all of the common shares of CEH[4] as an intermediate holding company that would hold the equity securities of CDG, ACE–REIT and indirectly, CAG.[5] Accordingly, Applicants request authority for Conectiv to contribute the equity securities of CDG and ACE–REIT and, indirectly, CAG to CEH. These transactions would make CDG and ACE–REIT direct subsidiaries and CAG and indirect subsidiary of CEH. Applicants also request that the Commission deem ACE–REIT not to be a utility holding company solely for purposes of section 11(b)(2) of the Act.

Financings

Applicants request authority for CEH, ACE–REIT, CAG and CDG to engage in certain financings until such time as CAG and CDG qualify as EWGs and the financing of the companies can be accomplished through rule 52 or until March 31, 2000, whichever first occurs (''Authorized Period''). Specifically, CEH requests authority to issue equity or long- or short-term debt securities to

---

[1] These assets include approximately 127 MW of net generating capacity (with book value of $26 million net of deferred taxes) to be transferred by Delmarva to CDG that may be transferred to a nonassociate exempt wholesale generator (''EWG'') in exchange for like-kind assets under a like-kind exchange agreement. In addition, ACE and Delmarva intend to transfer certain other generating assets to EWGs and propose in another filing, S.E.C. File NO. 70–9607, to transfer certain generating assets to nonassociate non-EWGs.

[2] Applicants propose to use ACE–REIT as an intermediate holding company over the ACE Generation Assets in order to minimize the tax consequences of the transfer.

[3] Applicants note that the capital dividend by Delmarva of the CDG common stock will cause its common equity to total capitalization ratio to fall below 30% until the sale of other generation assets to third parties is completed. The closing of this sale is scheduled for September 1, 2000 subject to the prior receipt of certain state regulatory approvals. The capital dividend by ACE will also cause the common equity to total capitalization ratio for ACE to fall below 30%.

[4] CEH will not be an operating company, will have no employees and will function as an intermediary holding company that will be a utility holding company until such time as CDG and CAG are qualified as EWGs. Applicants state that following authorization by the Commission, CEH will issue a nominal number of shares of equity to Conectiv in exchange for a nominal amount of cash not to exceed $1000.

[5] Conectiv intends for CEH to invest in one or more EWGs and to consolidate or dispose of ownership interests in any such EWG so long as the aggregate limitation on such investments, imposed by rule 53 or other applicable order, is not exceeded. Separately, Conectiv intends to contribute to CEH the equity securities of a rule 58 company engaged in energy marketing, Conectiv Energy Supply, Inc.

Conectiv to finance its ongoing business needs through the Authorization Period. Any debt will bear interest at a rate designed to approximate Conectiv's cost of money and will mature in 30 years or less. Conectiv also requests authorization for CEH to participate in the Conectiv system money pool (''Money Pool''). The total debt and equity proposed to be issued by CEH, either directly to Conectiv or through the Money Pool, will not exceed $750 million, less the amount of any debt issued by a CEH subsidiary directly to Conectiv, as described below.

In addition, ACE–REIT, CAG and CDG request authority to issue equity or long- or short-term debt securities to CEH or Conectiv through the Authorization Period. Any debt issued will mature in 30 years or less and will bear interest at a rate designed to approximate the lender's cost of money. Also, Applicants request authority for CAG, CDG, and ACE–REIT to participate in the Money Pool. Applicants propose that the total amount of debt and equity securities issued, either directly to Conectiv or through the Money Pool, by CDG will not exceed $150 million and by ACE–REIT and CAG will not exceed $100 million each.

Like Kind Exchange

Applicants anticipate that facilities having approximately 127 MW of net generating capacity owned by Delmarva to be transferred to CDG, will be subject to an obligation to transfer these assets to a nonassociate in a like-kind exchange (''To Be Transferred Assets''). First, Conectiv Energy, Inc. (''CEI''), which owns certain generating assets currently under construction (''New Hay Road Facilities''), would be transferred to a third party intermediary. Then, the To Be Transferred Assets would be sold to the nonassociate in exchange for the acquisition by CDG of either: (a) the New Hay Road Facilities at a time when the investment in the New Hay Road Facilities equals or approximates the value of the To Be Transferred Assets; or (b) other suitable generation assets (either, ''To Be Acquired Assets''). If CDG is not an EWG at the time of the acquisition of the To Be Acquired Assets, Applicants request authority to acquire those assets as utility assets.

Western Resources, Inc. 70–9665

Western Resources, Inc. (''WRI''), 818 Kansas Avenue, Topeka, Kansas 66612, a Kansas utility company and a public utility holding company claiming an exemption under section 3(a) by rule 2 from all provisions of the Act, except section 9(a)(2), has filed an application under sections 9(a)(2) and 10 of the Act in connection with the acquisition of a utility subsidiary.

WRI conducts utility operations through its KPL division and its subsidiary, Kansas Gas and Electric Company (''KGE''), which together provided approximately 628,000 customers in 471 communities in the state of Kansas with electricity. In addition, WRI has a 45% economic interest in ONEOK, Inc., an Oklahoma corporation that distributes natural gas to more than 1.4 million customers with natural gas.[6] Through various other subsidiaries, WRI is engaged in owning interests in power plants and projects and providing monitored security alarm and home paging services. For the year ending December 31, 1999, WRI reported consolidated revenues of approximately $2.0 million and net income of $12.5 million and had $8.0 billion in consolidated assets at the end of that period.

One nonutility subsidiary company, Westar Generating II Inc. (''WG''), is engaged in constructing two General Electric combustion turbine generators (''CTs''). The CTs are expected to be rated for a capacity of approximately 74 MW of net dependable capacity at peak conditions and are expected to become commercially operational at a KGE generating facility on June 1, 2000. Once the construction is complete and operation begins, WG will qualify as a public utility under section 2(a)(3) of the Act. Accordingly, WRI has requested authority to acquire WG as a public utility company.

WRI's costs associated with the acquisition of WG will be equal to that of the equipment and construction costs incurred by WG, which is expected to be approximately $63 million. The CTs will be connected to KGE at its generating facility directly through a new buss to be tied to a grid located at the facility. Initially, WG intends to sell all capacity and energy generated by the CTs to WRI at a cost-based rate under a power purchase agreement between WRI and WG.

In addition, WRI intends to claim an exemption as an intrastate holding company under section 3(a) of the Act and rule 2 with regards to the ownership of WR as a public utility company.

[6] The economic interest is derived solely from approximately 9.9% of the voting stock and shares of nonvoting convertible preferred stock of ONEOK. The staff of the Commission issued a no-action letter in 1997 on the proposition that ONEOK is not a subsidiary of WRI and that WRI does not control ONEOK. (See *Western Resources, Inc.,* SEC No-Action Letter (Nov. 24, 1997).

For the Commission by the Division of Investment Management, under delegated authority.

Margaret H. McFarland,

Deputy Secretary.

[FR Doc. 00–11961 Filed 5–11–00; 8:45 am]

BILLING CODE 8010–01–M

SECURITIES AND EXCHANGE COMMISSION

[Rel. No. IC–2443; File No. 812–11858]

Valley Forge Life Insurance Company, et al.

May 5, 2000.

AGENCY: Securities and Exchange Commission (''SEC'' or ''Commission'').

ACTION: Notice of Application for an Order under Section 6(c) of the Investment Company Act of 1940 (the ''1940 Act'' or ''Act''(granting exemptions from the provisions of Sections 2(a)(32), 22(c), and 27(i)(2)(A) of the 1940 Act and Rule 22c–1 thereunder, to permit the recapture of immediate interest payments applied to purchase payments made under certain deferred variable annuity contracts.

SUMMARY OF APPLICATION: Applicants seek an order under Section 6(c) of the 1940 Act to the extent necessary to permit, under specified circumstances, the recapture of immediate interest payments applied to purchase payments made under deferred variable annuity contracts (the ''Contracts'') that Valley Forge Life Insurance Company (''Valley Forge'') will issue through Valley Forge Life Insurance Company Variable Annuity Separate Account (''VFL Separate Account''), as well as other contracts that Valley Forge may issue in the future through VFL Separate Account or any other future separate accounts of Valley Forge ''Future Accounts'') that are substantially similar in all material respects to the Contracts (the ''Future Contracts''). Applicants also request that the order being sought extend to any other National Association of Securities Dealers, Inc. (''NASD'') member broker-dealer controlling or controlled by, or under common control with, Valley Forge, whether existing or created in the future, that serves as a distributor or principal underwriter of the Contracts or Future Contracts offered through VFL Separate Account or any Future Accounts (''Valley Forge Broker-Dealers(s)'').

APPLICANTS: Valley Forge Life, VFL Separate Account, the Future Accounts and CNA Investor Services, Inc. (collectively, ''Applicants'').

FILING DATE: The application was filed on November 17, 1999 and amended on April 3, 2000.

HEARING OR NOTIFICATION OF HEARING: An order granting the application will be issued unless the SEC orders a hearing. Interested persons may request a hearing on the application by writing to the SEC's Secretary and serving Applicants with a copy of the request, in person or by mail. Hearing requests must be received by the SEC by 5:30 p.m. on May 30, 2000, and should be accompanied by proof of service on the Applicants, in the form of an affidavit or, for lawyers, a certificate of service. Hearing requests should state the nature of the writer's interest, the reason for the request, and the issues contested. Persons who wish to be notified of a hearing may request notification by writing to the Secretary of the SEC.

ADDRESSES: Secretary, Securities and Exchange Commission, 450 Fifth Street, N.W., Washington, D.C. 20549–0609. Applicants, c/o Jonathan Kantor, Esq., Valley Forge Life Insurance Company, CNA Plaza, 43 South, Chicago, Illinois 60685.

FOR FURTHER INFORMATION CONTACT: Joyce M. Pickholz, Senior Counsel, or Keith E. Carpenter, Branch Chief, Office of Insurance Products, Division of Investment Management, at (202) 942–0670.

SUPPLEMENTARY INFORMATION: The following is a summary of the application. The complete application is available for a free from the SEC's Public Reference Branch, 450 Fifth Street, N.W., Washington, D.C. 20549–0102 (tel. (202) 942–8090).

Applicants' Representations

1. Valley Forge is a wholly-owned subsidiary of Continental Assurance Company. Continental Assurance Company is a wholly-owned subsidiary for Continental Casualty Company, which is wholly-owned by CNA Financial Corporation. Loews Corporation owns approximately 86% of the outstanding common stock of CNA Financial Corporation. VFL Separate Account was established on February 12, 1996 by resolutions of the Board of Directors of Valley Forge. Valley Forge serves as depositor of VFL Separate Account. Valley Forge may in the future establish one or more Future Accounts for which it will serve as depositor.

2. VFL Separate Account is a segregated asset account of Valley Forge. VFL Separate Account is registered with the Commission as a unit investment trust under the 1940 Act. VFL Separate Account filed a Form N–8A Notification of Registration under the 1940 Act on February 20, 1996.

3. VFL Separate Account filed a Form N–4 Registration Statement on August 18, 1999 under the Securities Act of 1933 (''1993 Act'') relating to the Contracts. Valley Forge may in the future issue Future Contracts through VFL Separate Account or through Future Accounts. That portion of the assets of VFL Separate Account that is equal to the reserves and other Contract liabilities with respect to VFL Separate Account is not chargeable with liabilities arising out of any other business of Valley Forge. Any income, gains or losses, realized or unrealized, from assets allocated to VFL Separate Account is, in accordance with VFL Separate Account's Contracts, credited to or charged against VFL Separate Account, without regard to other income, gains or losses of Valley Forge.

4. CNA Investor Services, Inc. (''CNAISI'') is an affiliate of Valley Forge and will be the principal underwriter of VFL Separate Account and distributor of the Contracts funded through VFL Separate Account (the ''VFL Separate Account Contracts''). CNAISI is registered with the Commission as a broker-dealer under the Securities Exchange Act of 1934 (the ''1934 Act'') and is a member of the NASD. The VFL Separate Account Contracts will be offered through unaffiliated broker-dealers who have entered into selling agreements with CNAISI. CNAISI, or any successor entity, may act as principal underwriter for any Future Accounts and distributor for any Future Contracts issued by Valley Forge.

5. The Contract is a part of Valley Forge's line of annuity products. The Contract is an individual deferred variable and fixed annuity contract. The Contract may be issued under a qualified plan, specially sponsored program or an individual retirement annuity or as a non-tax qualified contract. Purchase payments may be made at any time during the accumulation phase. The minimum initial purchase payment is $10,000 for non-tax qualified contracts and $2,000 for a qualified plan contract. Additional purchase payments of at least $1,000 can be made ($100 under the electronic fund transfer program). Unless Valley Forge agrees otherwise, the maximum total purchase payments it accepts is $1,000,000.

6. The Contracts permit purchase payments to be allocated to fixed accounts of Valley Forge (''Fixed Accounts''). The Fixed Accounts are not registered with the Commission.

7. VFL Separate Account currently is divided into 23 sub-accounts, each of which will be available under the VFL Separate Account Contracts. The sub-accounts are referred to as ''Investment Options''. Each Investment Option will invest in shares of a corresponding portfolio of certain underlying investment companies (''Funds''). The Investment Options and the Fixed Accounts will comprise the initial investment choices under the Contract. The Funds are open-end, management investment companies registered under the 1940 Act, whose shares are registered under the 1933 Act. Valley Forge, at a later date, may determine to create additional Investment Options of VFL Separate Account to invest additional underlying portfolios or other investments as may now or in the future be available. Similarly, Investment Option(s) of VFL Separate Account may be combined or eliminated from time to time.

8. The Contract provides for withdrawal options, annuity payment options, as well as transfer privileges among Investment Options, dollar cost averaging, automatic transfer option, death benefits and other features. The Contract has charges consisting of: (i) an annual asset-based product expense charge of 1.40% assessed against the net assets of each sub-account; (ii) a withdrawal charge as a percentage of purchase payments which starts at 7% in the first year, and declines to 0% after 8 years with a 10% free withdrawal amount permitted under certain circumstances; (iii) a $30 contract maintenance charge for Contracts with Contract value of less than $50,000 during the accumulation phase; and (iv) a transfer fee of $25 for each transfer in excess of 12 in a Contract year during the accumulation period. The Funds also incur management fees and operating expenses which vary depending upon with Funds are selected.

9. Each time Valley Forge receives a purchase payment from an owner during the first Contract year, Valley Forge will add an additional amount to the Contract (''Immediate Interest Payment''). The Immediate Interest Payment will equal 3% of the purchase payment. Valley Forge will fund the Immediate Interest Payment from its general account assets. Valley Forge will allocate the Immediate Interest Payment to the Fixed Accounts and/or Investment Options in the same proportion as the purchase payment. Valley Forge will recapture Immediate Interest Payments only under the following circumstance: if the Contract owner makes a withdrawal anytime

before the first day of the second Contract year, including if the Owner returns the Contract for a refund during the free look period (except for withdrawals pursuant to the systematic withdrawal program not subject to the withdrawal charge).

10. Applicants seek exemption pursuant to Section 6(c) of the 1940 Act from Sections (2)(a)(32), 22(c) and 27(i)(2)(A) of the 1940 Act and Rule 22c–1 thereunder to the extent necessary to permit Valley Forge to recapture an amount equal to any Immediate Interest Payment in the event that a Contract owner makes a withdrawal of Contract value, including the exercise of the free-look right, before the first day of the second Contract year (except for withdrawals pursuant to the systematic withdrawal program not subject to the withdrawal charge). The dollar amount of Immediate Interest Payments will be deducted pro-rata from the amount withdrawn.[1] Any earnings that resulted from the Immediate Interest Payments will not be deducted. After the First Contract year, the Immediate Interest Payment will vest and can be withdrawn at any time. Valley Forge reserves the right to limit Immediate Interest Payments in the future.

Applicants' Legal Analysis

1. Section 6(c) of the 1940 Act authorizes the Commission to exempt any person, security or transaction, or any class or classes of persons, securities or transactions from the provisions of the 1940 Act and the rules promulgated thereunder, if and to the extent that such exemption is necessary or appropriate in the public interest and consistent with the protection of investors and the purposes fairly intended by the policy and provisions of the 1940 Act. Applicants request that the Commission, pursuant to Section 6(c) of the 1940 Act, grant the exemptions summarized above with respect to the Contracts and any Future Contracts funded by VFL Separate Account or Future Accounts, that are issued by Valley Force and underwritten or distributed by CNAISI or Valley Forge Broker-Dealers. Applicants undertake that Future Contracts funded by VFL Separate Account or any Future Accounts will be substantially similar in all material respects to the Contracts. Applicants believe that the requested exemptions are appropriate in the public interest and consistent with the protection of investors and the purposes fairly intended by the policy and provisions of the 1940 Act.

2. Applicants represent that it is not administratively feasible to track the Immediate Interest Payment amounts in VFL Separate Account after the Immediate Interest Payment is applied. Accordingly, the asset-based charges applicable to VFL Separate Account will be assessed against the entire amounts held in VFL Separate Account, including the Immediate Interest Payment amount, during the first Contract year. As a result, during such period, the aggregate asset-based charges assessed against a Contract owner's Contract value will be higher than those that would be charged if the Contract owner's Contract value did not include the Immediate Interest Payment.

3. Subsection (i) of Section 27 of the 1940 Act provides that Section 27 does not apply to any registered separate account funding variable insurance contracts, or to the sponsoring insurance company and principal underwriter of such account, except as provided in paragraph (2) of the subsection. Paragraph (2) provides that it shall be unlawful for any registered separate account funding variable insurance contracts or a sponsoring insurance company of such account to sell a contract funded by the registered separate account unless, among other things, such contract is a redeemable security. Section 2(a)(32) of the 1940 defines ''redeemable security'' as any security, other than short-term paper, under the terms of which the holder, upon presentation to the issuer, is entitled to receive approximately his proportionate share of the issuer's current net assets, or the cash equivalent thereof.

4. Applicants submit that the Immediate Interest Payment recapture provisions of the Contract would not deprive a Contract owner of his or her proportionate share of the issuer's current net assets. Applicants state that a Contract owner's interest in the amount of the Immediate Interest Payment allocated to his or her Contract value upon receipt of purchase payments in the first Contract year are not vested until the first day of the second Contract year. Until or unless the amount of any Immediate Interest Payment is vested, Applicants submit that Valley Forge retains the right and interest in the Immediate Interest Payment amount, although not in the earnings attributable to that moment. Applicants argue that when Valley Forge recaptures any Immediate Interest Payment it is simply retrieving its own assets, and because a Contract owner's interest in the Immediate Interest Payment is not vested, the Contract owner has not been deprived of a proportionate share of VFL Separate Account assets, *i.e.,* a share of VFL Separate Account's assets proportionate to the Contract owner's Contract value (including the Immediate Interest Payment).

5. In addition, with respect to Immediate Interest Payment recapture upon the exercise of the free-look privilege, Applicants state that it would be patently unfair to allow a Contract owner exercising that privilege to retain the Immediate Interest Payment amount under a Contract that has been returned for a refund after a period of only a few days. Applicants state that if Valley Forge could not recapture the Immediate Interest Payment, individuals could purchase a Contract with no intention of retaining it, and simply return it for a quick profit.

6. Furthermore, Applicants state that the recapture of the Immediate Interest Payment, in the event of a withdrawal before the first day of the second Contract year, is designed to protect Valley Forge against Contract owners making large purchase payments in the first Contract year without affording it sufficient time to recover the cost of the Immediate Interest Payment, to its financial detriment. Again, the amounts recaptured equal the Immediate Interest Payment provided by Valley Forge from its own general account assets and any gain would remain as part of the Contract owner's Contract value.

7. Applicants represent that the Immediate Interest Payment will be attractive to and in the interest of investors because it will permit Contract owners to put 103% of their purchase payments to work for them in the selected Investment Options and Fixed Accounts. Also, any earnings attributable to the Immediate Interest Payment will be retained by the Contract owner, and the principal

[1] When an owner requests a withdrawal any time during the first contract year, Valley Forge will deduct the amount of the Immediate Interest Payment in proportion to the amount of the purchase payment withdrawn.

Example:

Purchase Payment: $100,000

Immediate Interest Payment: $3,000

Subsequent 1st Year Withdrawal: $10,000

Immediate Interest Payment Recaptured: $300

The withdrawal charge is assessed on the amount of the purchase payment withdrawn ($10,000). The resulting withdrawal charge is 7% of $10,000 which reduces the amount available to $9,300. VFL would then deduct the proportionate amount of the Immediate Interest Payment to be recaptured ($300) from the amount to be disbursed to the owner.

amount of the Immediate Interest Payment will be retained if a Contract owner does not make a withdrawal of Contract value (including the exercise of the free-look right) before the first day of the second Contract year.

8. Applicants state that Valley Forge's right to recapture Immediate Interest Payments applied to purchase payments in the event of a withdrawal before the first day of the second Contract year, is designed to protect Valley Forge against Contract owners making large purchase payments in the first Contract year without affording it sufficient time to cover the cost of the Immediate Interest Payment, to its financial detriment. With respect to funds paid upon the return of Contracts within the free-look period, the amount payable by Valley Forge must be reduced by the allocated Immediate Interest Payment. Otherwise, Applicants state that purchasers could apply for Contracts for the sole purpose of exercising the free-look provision and making a quick profit.

9. Applicants submit that the provisions for recapture of any applicable Immediate Interest Payment under the Contracts or any Future Contract as set forth in this Application will not violate Sections 2(a)(32) and 27(i)(2)(A) of the 1940 Act. Nevertheless, to avoid any uncertainties, Applicants request an exemption from those Sections, to the extent deemed necessary, to permit the recapture of any Immediate Interest Payment under the circumstances described herein with respect to the Contracts and any Future Contracts, without the loss of the relief from Section 27 provided by Section 27(i).

10. Section 22(c) of the 1940 Act authorizes the Commission to make rules and regulations applicable to registered investment companies and to principal underwriters of, and dealers in, the redeemable securities of any registered investment company, to accomplish the same purposes as contemplated by Section 22(a). Rule 22c–1 thereunder prohibits a registered investment company issuing any redeemable security, a person designated in such issuer's prospectus as authorized to consummate transactions in any such security, and a principal underwriter of, or dealer in, such security, from selling, redeeming, or repurchasing any such security except at a price based on the current net asset value of such security which is next computed after receipt of a tender of such security for redemption or of an order to purchase or sell such security.

11. Arguably, Valley Forge's recapture of the Immediate Interest Payment might be viewed as resulting in the redemption of redeemable securities for a price other than one based on the current net asset value of VFL Separate Account. Applicants contend, however, that the recapture of the Immediate Interest Payment is not violative of Section 22(c) and Rule 22c–1. Applicants argue that the recapture does not involve either of the evils that Rule 22c–1 was intended to eliminate or reduce, as far as reasonably practicable, namely: (1) the dilution of the value of outstanding redeemable securities of registered investment companies through their sale at a price below net asset value or their redemption or repurchase at a price above it, and (ii) other unfair results including speculative trading practices. To effect a recapture of an Immediate Interest Payment, Valley Forge will redeem interests in a Contract owner's Contract value at a price determined on the basis of current net asset value of VFL Separate Account. The amount recaptured will equal the amount of the Immediate Interest Payment that Valley Forge paid out of its general account assets. Although Contract owners will be entitled to retain any investment gain attributable to the Immediate Interest Payment, the amount of such gain will be determined on the basis of the current net asset value of VFL Separate Account. Thus, no dilution will occur upon the recapture of the Immediate Interest Payment. Applicants also submit that the second harm that Rule 22c–1 was designed to address, namely, speculative trading practices calculated to take advantage of backward pricing, will not occur as a result of the recapture of the Immediate Interest Payment. However, to avoid any uncertainty as to full compliance with the Act, Applicants request an exemption from the provisions of Section 22(c) and Rule 22c–1 to the extent deemed necessary to permit them to recapture the Immediate Interest Payment under the Contracts and Future Contracts.

Conclusion

Applicants submit that their request for an order is appropriate in the public interest. Applicants state that such an order would promote competitiveness in the variable annuity market by eliminating the need to file redundant exemptive applications, thereby reducing administrative expenses and maximizing the efficient use of Applicants' resources. Applicants argue that investors would not receive any benefit or additional protection by requiring Applicants to repeatedly seek exemptive relief that would present no issue under the Act that has not already been addressed in the Application described herein. Applicants submit that having Applicants file additional applications would impair Applicants' ability effectively to take advantage of business opportunities as they arise. Further, Applicants state that if Applicants were required repeatedly to seek exemptive relief with respect to the same issues addressed in the application described herein, investors would not receive any benefit or additional protection thereby.

Applicants submit, based on the grounds summarized above, that their exemptive request meets the standards set out in Section 6(c) of the Act, namely, that the exemptions requested are necessary or appropriate in the public interest and consistent with the protection of investors and the purposes fairly intended by the policy and provisions of the Act, and that, therefore, the Commission should grant the requested order.

For the Commission, by the Division of Investment Management, pursuant to delegated authority.

Margaret H. McFarland,

Deputy Secretary.

[FR Doc. 00–11960 Filed 5–11–00; 8:45 am]

BILLING CODE 8010–01–M

SECURITIES AND EXCHANGE COMMISSION

[Release No. 34–42759; File No. SR–PCX–99–39]

Self-Regulatory Organizations; Order Approving Proposed Rule Change and Amendment Nos. 1 and 2 and Notice of Filing and Order Granting Accelerated Approval to Amendment Nos. 3, 4, 5, 6 and 7 to the Proposed Rule Change by the Pacific Exchange, Inc. Creating PCX Equities, Inc.

May 5, 2000.

I. Introduction

On October 7, 1999, the Pacific Exchange, Inc. (''PCX'' or ''Exchange''), filed with the Securities and Exchange Commission (''SEC'' or ''Commission''), pursuant to Section 19(b)(1) of the Securities Exchange Act of 1934 (''Act'' or ''Exchange Act''),[1] and Rule 19b–4 thereunder,[2] a proposed rule change to create PCX Equities, Inc. (''PCX Equities''). The proposed rule change was published for comment in the **Federal Register** on December 6, 1999.[3]

[1] 15 U.S.C. 78s(b)(1).

[2] 17 CFR 240.19b–4.

[3] *See* Securities Exchange Act Release No. 42178 (Nov. 24, 1999), 64 FR 68136.

On November 24, 1999 and January 10, 2000, respectively, the PCX filed Amendment Nos. 1 [4] and 2 [5] to the proposal. On February 10, 2000, the PCX submitted Amendment No. 3 to the proposed rule change. [6] On February 23, 2000, Amendment Nos. 1 and 2 were published in the **Federal Register.**[7] On March 13, 2000, March 30, 2000, April 19, 2000, and May 1, 2000, the PCX submitted Amendment Nos. 4, 5, 6, and 7 respectively to the proposed rule change. [8] The Commission received 26 comments regarding the proposal; all of the commenters supported the proposed rule change.[9]

This order approves the proposed rule change, as amended, In addition, the Commission is approving on an accelerated basis, and soliciting comments on, Amendment No. 3, 4, 5, 6 and 7.

[4] *See* Letters from Brandon Becker, Wilmer, Cutler & Pickering, to Belinda Blaine, Associate Director, Division of Market Regulation (''Division''), SEC, dated November 24, 1999 and from Kathryn Beck, Senior Vice President, General Counsel and Corporate Secretary, PCX, to Kelly Riley, Attorney, Division, SEC, dated January 7, 2000 (''Amendment No. 1''). The January 7, 2000 letter contained the Form 19b–4 for Amendment No. 1.

[5] *See* Letter from Brandon Becker, Wilmer, Cutler & Pickering, to Nancy J. Sanow, Senior Special Counsel, Division, SEC, dated January 7, 2000 (''Amendment No. 2'').

[6] *See* Letter from Brandon Becker, Wilmer, Cutler & Pickering, to Nancy J. Sanow, Senior Special Counsel, Division, SEC, dated February 9, 2000 (''Amendment No. 3'') In Amendment No. 3, the Exchange responded to comments and questions raised by the Division staff regarding the proposed rule change and amended certain proposed Rules of PCX Equities. In addition, the PCX submitted amendments to the prposed PCX Equities Certificate of Incorporation, the proposed PCX Equities Bylaws, the proposed PCX Equities Rules and the proposed PCX Rules. Finally, Amendment No. 3 contained a draft of the proposed shareholder's agreement.

[7] *See* Securities Exchange Act Release No. 42419 (Feb. 11, 2000), 65 FR 9027.

[8] *See* Letter from Cherie Macauley, Wilmer, Cutler & Pickering, to Nancy J. Sanow, Senior Special Counsel, Division, SEC, dated March 10, 2000 (''Amendment No. 4''); Letter from Brandon Becker, Wilmer, Cutler & Pickering, to Nancy J. Sanow, Senior Special Counsel, Division, SEC, dated March 29, 2000 (''Amendment No. 5''); Letter from Cherie Macauley, Wilmer, Cutler & Pickering, to Nancy J. Sanow, Senior Special Counsel, Division, SEC, dated April 18, 2000 (''Amendment No. 6''); and Letter from Cherie Macauley, Wilmer, Cutler & Pickering, to Nancy J. Sanow, Senior Special Counsel, Division, SEC, dated April 28, 2000 (''Amendment No. 7''). In Amendment No. 4, the Exchange amended the proposed PCX Constitution and selected proposed PCX Equities Rules. In Amendment No. 5, the Exchange amended selected proposed PCX Equities Rules and responded to comments raised by Division staff. In Amendment No. 6, the Exchange amended selected proposed PCX Equities Rules and proposed PCX Equities Equity Floor Procedure Advices. In Amendment No. 7, the Exchange amended selected proposed PCX Equities and PCX Rules, and incorporated into the proposed PCX rules the Plan of Delegation of Functions by the PCX to PCX Equities.

[9] *See infra* note 30.

II. Description of the Proposal

The PCX proposes to create a Delaware stock corporation, to be called PCX Equities that will be a wholly-owned subsidiary of the PCX. PCX will transfer to PCX Equities all of the assets and liabilities that solely support the equities trading business and equities clearing business of the PCX. Upon restructuring, however, PCX will continue to be the self-regulatory organization (''SRO'') for PCX Equities.[10] The PCX proposes to authorize PCX Equities to issue Equity Trading Permits (''ETPs'') and Equity Automated Systems Access Permits (''Equity ASAPs'') that will entitle holders of the permits (''ETP Holders'' and ''Equity ASAP Holders'') to trade equity securities on the newly-created PCX Equities. The proposal submitted by the PCX to create PCX Equities represent a significant departure from the Exchange's current structure.

According to the PCX, there are two principal reasons why the Exchange proposes to create the new PCX Equities subsidiary and to institute a system of trading permits. First, the PCX intends to separate the Exchange's equities operation into a subsidiary of PCX that will continue to share certain corporate functions with the Exchange's options business. By restructuring the equities business as a private stock corporation with business control and management by the directors, officers, and regulatory staff of PCX Equities, the Exchange believes that the new entity will have greater flexibility to develop and execute strategies designed to improve its competitive position than it has under the current membership structure. Second, the PCX intends to increase the revenue of its equities business by conferring trading privileges on the basis of trading permits (ETPs and Equity ASAPs), rather than requiring equities trading participants to bear the costs of a seat ownership.

PCX Equities will be run by its management with limited policy direction by members. As a result, certain committees that now administer many of the PCX's equity trading programs no longer exist. As discussed in more detail below, PCX Equities will have only three member committees: the Business Conduct Committee, the Member Advisory Committee, and the Nominating Committee. The management of PCX Equities will make all other business decisions regarding the trading of equities on PCX Equities.[11]

In other ways, the PCX Equities' structure represents significant changes to the way U.S. stock exchanges currently operate. As discussed below, PCX Equities will issue ETPs and Equity ASAPs to persons or entities that wish to engage in equity transactions on PCX Equities. These trading permits merely provide access to the PCX Equities' trading facilities and do not confer ownership rights on those persons or entities who purchase them. Accordingly, with certain exceptions discussed below, PCX Equities members will have limited voting rights and limited input into the administration of the affairs of PCX Equities.

The proposed rule change for implementing the restructuring includes: (i) The proposed Certificate of Incorporation for PCX Equities; (ii) the proposed Bylaws for PCX Equities; (iii) the proposed Rules for PCX Equities; (iv) changes to the PCX Constitution; and (v) changes to the PCX Rules.

A. PCX Equities

1. Corporate Status

PCX Equities will be created operates as a Delaware stock corporation. At this time, all of the issued shares of stock of PCX Equities will be owned by the PCX. Current PCX members will retain their memberships, and thus, their ownership interests in the PCX.

2. Regulation of PCX Equities

PCX Equities will operate as a subsidiary of PCX, which is a national securities exchange registered under Section 6 of the Act.[12] The PCX, as the SRO, retains ultimate responsibility for compliance by its members with the provisions of the Act and the rules and regulations thereunder. For this reason, ETP Holders and Equity ASAP Holders will be considered statutory ''members'' of PCX.

As a registered national securities exchange and the parent company of PCX Equities, the PCX will continue to carry out its statutory responsibilities to enforce compliance by ETP Holders and Equity ASAP Holders with the provisions of the federal securities laws and rules thereunder, as well as the Rules of PCX Equities, and to govern the administration of PCX Equities. In particular, to be effective any changes to the Rules and governing documents of

[10] The proposed rule change does not affect the PCX's options business, which will continue to operate as a membership organization through the PCX.

[11] For example, the management of PCX Equities will make decisions regarding the listing and delisting of equities listed on PCX Equities, although such decisions may be appealed to the PCX Equities Board Appeals Committee.

[12] 15 U.S.C. 78f.

PCX Equities must be approved by the PCX. Moreover, filing of changes to PCX Equities' Bylaws and Rules with the Commission pursuant to Section 19(b) of the Act [13] and Rule 19b–4 [14] thereunder must be submitted by the PCX.

While ultimately responsible, the PCX has proposed to delegate specific self-regulatory responsibilities to PCX Equities, pursuant to a Delegation Plan. [15] Specifically, PCX Equities will assume responsibility with respect to the equities business of the Exchange for, among other things: (1) Extablishing and interpreting rules governing the activities of ETP Holders and Equity ASAP Holders; (ii) determining regulatory and trading policies relating to the business activities of ETP Holders and Equity ASAP Holders; (iii) assuring compliance with PCX Equities Rules and the federal securities laws; (iv) administering surveillance programs and systems and enforcing rules governing the conduct and trading activities of ETP Holders, ETP Firms,[16] Equity ASAP Holders and their associated persons on PCX Equities; (v) examining and investigating ETP Holders, ETP Firms, Equity ASAP Holders and their associated persons to determine if they have violated the Rules of PCX Equities or the federal securities laws; (iv) administering the PCX Equities disciplinary program; (vii) conducting arbitrations, medications and other dispute resolution programs; (viii) determining whether applicants need the requirements for holding an ETP or Equity ASAP; (ix) reviewing qualifications of persons wishing to register as associated persons of ETP Holders, ETP Firms, or Equity ASAP Holders; (x) placing restrictions on the business activities of ETP Holders, ETP Firms, Equity ASAP Holders and their associated persons consistent with the public interest, the protection of investors and the federal securities laws; (xi) establishing fees and changes; (xii) overseeing the operation of the PCX Equities trading facilities; (xiii) maintaining a communications network infrastructure for processing quotes, orders, transaction reports and transaction comparisons; (xiv) collecting and consolidating information for the surveillance audit trail; (xi) developing and adoping rule changes for the collection, processing and dissemination of quote and transaction information; (xvi) developing and adopting rules, interpretations and policies to maintain and enhance the integrity, fairness, efficiency and competitiveness of PCX Equities; (xvii) administering the Exchange's involvement in the national market system (''NMS'') plans; and (xviii) developing, administering and enforcing listing standards for securities traded on PCX Equities.

While PCX Equities has extensive delegated authority to administer and manage the equities trading business, the PCX retains the ultimate responsibility for the Rules and regulations of PCX Equities, as well as for its operation and administration. As part of its self-regulatory responsibilities, the PCX will review rulemaking and disciplinary decisions of PCX Equities and direct PCX Equities to take action that may be necessary to effectuate the purposes and functions of the Exchange Act. Thus, while PCX Equities will be a separate entity, it will still remain under the self-regulatory authority of the PCX.

3. Governing Documents and Rules

PCX Equities' Certificate of Incorporation, Bylaws and Ruels will govern its activities. Proposed PCX Equities Rules 1, 2, and 3, which relate to qualifications for ETPs and Equity ASAPs and corporate governance matters, and proposed PCX Equities Rule 10, which relates to displinary procedures, reflect significant departures from existing PCX rules. The remaining Rules, although modified to reflect the issuance of ETPs and Equity ASAPs and the revised management structure, are similar to current PCX Rules. The Rules and Bylaws will reflect the status of PCX Equities as a wholly-owned subsidiary of PCX, under management of the PCX Equities Board of Directors (''PCX Equities Board'') and its designated officers, and ultimately subject to the self-regulatory authority of the PCX.

4. PCX Equities Board of Directors

The PCX Equities Board will consist of no fewer than 10 or more than 12 directors. Currently, the Exchange contemplates that there will be 10 directors. The composition of the PCX Equities Board will be as follows:

- The Chief Executive Officer (''CEO'') of PCX;
- The President of PCX Equities;
- Five public directors, at least three of whom must also be members of the Board of Governors of the PCX (''PCX Board'');
- One allied person [17] from an ETP Firm who is also a member of the PCX Board, and
- Two nominees of ETP Holders and Equity ASAP Holders (the ''ETP/Equity ASAP Holder Directors'').

The CEO of PCX, as the Incorporator, will appoint the initial PCX Equities Board. Subsequently, the PCX Equities Board will be nominated by the sitting PCX Equities Board, subject to the nominating procedures set forth below for the selection of two ETP/Equity ASAP Holder Directors. The PCX Equities Board will be elected by PCX, the sole shareholder. PCX will have the right to approve, remove, and replace any member of the PCX Equities Board by virtue of its status as sole shareholder, subject to the Bylaws. Any vacancy on the PCX Equities Board will be filled with a person who satisfies the classification associated with the vacant seat, *i.e.,* a member of the public or an ETP Holder or Equity ASAP Holder. To the extent that the number of PCX Equities Board seats is changed from the initially contemplated 10 members, at least 50 percent of the PCX Equities Board must be public directors, and at least 20 percent (but no fewer than two directors) must be directors who are ETP Holders or Equity ASAP Holders and are nominated by the Nominating Committee. The ETP/Equity ASAP Holder Directors will be nominated by the Nominating Committee or by petition of at least 10 percent of all ETP Holders and Equity ASAP Holders. If a petition is submitted, and a vote is held, the candidates selected by ETP Holders and Equity ASAP Holders must be supported by a plurality of all the ETP Holders and Equity ASAP Holders in the aggregate in order to be selected as a nominee to the PCX Equities Board. If no petition is filed, the nominees put forward the Nominating Committee will be deemed to be elected, and no separate vote of ETP Holders and Equity ASAP Holders will be held. Pursuant to a stockholders voting agreement, the PCX, as the sole stockholder, will agree to elect the ETP/Equity ASAP Holder Directors nominated by the PCX Equities Nominating Committee.[18]

[13] 15 U.S.C. 78s(b).

[14] 17 CFR 240.19b-4.

[15] *See* Attachment No. 4 to Amendment No. 1, for the proposed Plan of Delegation of Functions by the PCX to PCX Equities (''Delegation Plan'').

[16] An ETP may be issued to either and individual or an entity, both of which must be registered broker-dealers pursuant to Section 15 of the Act. If an ETP is issued to an entity (''ETP Firm''), the firm must nominate an individual, approved by PCX Equities, to conduct business on PCX Equities' facilities. Such individual is also referred to as an ETP Holder. *See* proposed PCX Equities Rules 1.1(l) and (m).

[17] An allied person is generally defined as a control person that is actively involved in the business of an ETP Firm or Equity ASAP Holder. *See* proposed PCX Equities Rule 1.1(b).

[18] *See* Attachment No. 5 to Amendment No. 3, for the proposed Shareholder's Agreement, which requires the PCX to elect the slate submitted by the PCX Equities Nominating Committee.

5. Representation on PCX Board of Governors

The PCX Board is currently composed of 22 governors. The composition of the PCX Board will be modified as part of the restructuring to include one governor representing PCX Equities to provide input on the PCX Board. This governor ("ETP/Equity ASAP Holder Governor") will be nominated by the PCX Equities Nominating Committee or by a petition of at least 10 percent of all ETP Holders and Equity ASAP Holders and must be either an ETP Holder, an Equity ASAP Holder or an allied person of an ETP Firm or Equity ASAP Holder. Pursuant to the agreement between PCX Equities and the PCX, the PCX Board will appoint the person who is so nominated by ETP Holders and Equity ASAP Holders to the PCX Board.[19]

6. Committees

As discussed above, the PCX has proposed to eliminate its current committee structure for its equities business. The proposed Bylaws and proposed Rules of PCX Equities envision only three equity committees—the Nominating Committee, the Member Advisory Committee,[20] and the Business Conduct Committee.[21] Except for the Nominating Committee, the CEO of PCX Equities will appoint the members of the equity committees for terms of one year. The CEO of PCX Equities also will appoint the Chair and Vice Chair of each equity committee. ETP Holders, Equity ASAP Holders, and public representatives may be appointed to serve on the equity committees.

a. *Nominating Committee.* The Nominating Committee will select two nominees for the ETP/Equity ASAP positions on the PCX Equities Board and one nominee for ETP/Equity ASAP position on the PCX Board. These nominees may be ETP Holders, allied persons[22] of ETP Firms, or Equity ASAP Holders. The nominee for the PCX Board may be the same person as one of the nominees for the PCX Equities Board. The Nominating Committee will have seven members, six of whom will represent ETP Holders or Equity ASAP Holders. The composition of the Nominating Committee will represent proportionally[23] all ETP Holders and Equity ASAP Holders with each member constituency having at least one representative. The seventh member will be a representative of the public. The Incorporator will appoint the initial Nominating Committee. Thereafter, the sitting Nominating Committee will nominate the six member representatives, and the PCX Equities CEO will appoint the public representative. Additional candidates for the Nominating Committee may be put forward by a petition of at least 10 percent of all ETP Holders and Equity ASAP Holders. If no petition is filed, the slate proposed by the sitting Nominating Committee will be deemed to be approved by ETP Holders and Equity ASAP Holders, and no separate vote of ETP Holders and Equity ASAP Holders will be held. If a petition is filed, the members will vote on the candidates for each position. A plurality will be needed for selection.[24]

b. *Business Conduct Committee.* The Business Conduct Committee will have authority over the disciplinary process of the PCX Equities. It will be responsible for examining the business conduct and financial condition of PCX Equities members. Further, it will conduct hearings and render decisions in summary disciplinary proceedings. The Business Conduct Committee will be responsible for imposing sanctions for violations within the disciplinary jurisdiction of the PCX Equities. Finally, the Business Conduct Committee will require members to produce financial and operational reports. The Business Conduct Committee will have a proportional[25] composition of ETP Holders and Equity ASAP Holders, with a minimum of one representative from each member constituency.

c. *Member Advisory Committee.* The Member Advisory Committee will be responsible for advising the management of PCX Equities regarding disciplinary matters and off-board trading rules. As an equity committee, it will be subject to the provisions of proposed Rule 3.2. Thus, the Incorporator will appoint the initial members and the CEO of PCX Equities will appoint all subsequent members.

d. *Board Appeals Committee.* In addition to the equity committee, PCX Equities is proposed to have one Board committee, the Board Appeals Committee. The Board Appeals Committee will be responsible for hearing appeals of Business Conduct Committee decisions, listing and delisting decisions made by the PCX Equities management, and sanctions imposed on members by the PCX Equities regulatory staff. The PCX Equities Board will appoint directors to serve on the Board Appeals Committee and may create any other Board committee it deems appropriate. Each Board Appeals Committee will consist of at least one public director and at least one ETP/Equity ASAP Holder Director.

7. Management

PCX equities will have a Chairman of the Board and a President, either of whom may be the CEO of PCX Equities. In addition, PCX Equities will have a Secretary and a Chief Regulatory Officer who will be appointed by, and serve at the pleasure of, the PCX Equities Board. The officers of PCX Equities will manage the business and affairs of PCX Equities, subject to the oversight of the PCX Equities Board, and, in some cases, subject to the approval of PCX as the sole stockholder and SRO.

8. Disciplinary Process

PCX Equities' disciplinary process will be similar to the existing PCX disciplinary process. The PCX Equities Chief Regulatory Officer, or his or her staff, will authorize the initiation of disciplinary actions and proceedings. The Business Conduct Committee will conduct hearings, render decisions, and impose sanctions. Decisions of the Business Conduct Committee may be appealed for review to the Board Appeals Committee. Decisions of the Board Appeals Committee may be appealed to the PCX Board. In addition, the PCX Board may on its own initiative order a review of any Board Appeals Committee decision. The decision of the PCX Board (or, if the PCX Board chooses not to hear an appeal, the decision of the Board Appeals Committee) shall be considered the final action of the Exchange. Thus, an aggrieved member may seek review of the Exchange's decision by the Commission.

9. Equity Listings and Delistings

The management of PCX Equities will list and delist securities in accordance with rules and standards comparable to those set forth in the PCX Rules and currently used by the Equity Listing Committee of the PCX. However, as described above, PCX Equities will not have the committee structure currently used by the PCX for decision-making, and, thus PCX Equities' management

[19] *See id.*

[20] *See* Amendment No. 6 *supra* note 8.

[21] However, the PCX Equities Board may appoint other committees as it deems appropriate.

[22] *See supra* note 17.

[23] For example, if Equity ASAPs represent 34 percent of the total number of trading permits issued by PCX Equities, then Equity ASAPs will be entitled to two positions.

[24] Only those persons that hold either an ETP or Equity ASAP will have voting privileges. Thus, ETP Firms do not have a vote separate from their ETP. An ETP Holder that is nominated by an ETP Firm will cast its firm's vote.

[25] *See supra* note 23. The proportional composition of the Business Conduct Committee will be determined in the same manner as the Nominating Committee.

will make all decisions regarding listings and delistings.[26]

10. Financial Information

PCX will transfer all of the assets and liabilities that solely support the equities business or equities clearing business to PCX Equities. Assets that support both the options and equities business will be retained as assets of PCX. Costs related to these shared assets will appear as inter-company charges to PCX Equities and will be defined in an agreement between PCX and PCX Equities.

Revenue generated by the equities activities, including ETP and Equity ASAP fees, specialist fees, tape fees and transaction fees, will accrue to PCX Equities. Direct expenses related to the equities activities, such as technology and personnel, will be charged to PCX Equities. Allocations of the cost of certain technology, regulatory and corporate functions will be charged to PCX Equities pursuant to an agreement between PCX Equities and PCX.

11. Agreement Between PCX and PCX Equities

Currently, the PCX's equities and options operations share certain infrastructure and personnel. After the completion of the restructuring, these shared assets will remain the property of PCX and the shared personnel will continue to be employed by PCX. In each case, however, PCX Equities will have access to those resources through inter-company contracts with PCX. In particular, PCX will contract to provide PCX Equities with certain management and support services and staff. The contract will include services for administration, membership, technology, finance and accounting, human resources and legal services. The agreement between PCX and PCX Equities will allocate charges for these services and staff between PCX and PCX Equities.

B. Equity Trading Permits and Equity ASAPs

1. Classes of Trading Permits and Privileges Conferred by ETPs and Equity ASAPs.

PCX Equities will be authorized to issue two types of equity trading permits: ETPs and Equity ASAPs. ETPs will authorize holders to trade equity securities on any facility of PCX Equities, including the trading floors, P/COAST, or Optimark, as a specialist, floor broker, or order flow firm. ETP Holders may engage in the trading of equities in the same manner as currently practiced by PCX members who trade on the equity floors. Equity ASAP Holders, like current ASAP members, will have electronic access to PCX Equities via P/COAST, Optimark, and any other system approved by the PCX Equities Board, and will be entitled to limited trading privileges on the equities floor, in accordance with rules comparable to those set forth in the PCX Rules today.[27]

An ETP or Equity ASAP does not grant its holder any right to trade options on the PCX. Any ETP Firm, ETP Holder or Equity ASAP Holder that wishes to trade options must be approved for and obtain a PCX membership pursuant to the PCX's standard application procedures.

ETP Holders and Equity ASAP Holders will have limited voting rights[28] and may nominate, through the Nominating Committee or by petition, two members to the PCX Equities Board and one member of the PCX Board. Unlike current ASAP members, Equity ASAP Holders will have these limited voting rights. ETPs and Equity ASAPs provide access to PCX Equities but do not confer ownership rights. Thus, neither ETP Holders nor Equity ASAP Holders will have any distribution or other ownership rights in PCX Equities or PCX by virtue of their status as an ETP Holder or Equity or ASAP Holder, or as a member of PCX.[29]

2. Qualification for ETPs and Equity ASAPs

There will be no limit on the number of ETPs and Equity ASAPs issued by PCX Equities. PCX Equities will commence issuing ETPs and Equity ASAPs once the subsidiary is created. Current PCX members, PCX ASAP members, and any other interested persons or entities that are registered broker-dealers, may be granted PCE Equities trading permits through an application process. ETP and Equity ASAP qualifications will be substantially the same as the existing requirements for PCX membership and PCX ASAP membership, respectively.

The application process for applicants who are not current PCX members or ASAP members will be the same as the PCX's current process. The decision to grant or deny an application for trading privileges will be made by officers of PCX Equities. The decision to deny an application may be reviewed by the Board Appeals Committee in accordance with the provisions of proposed PCX Equities Rule 10.

Current PCX members and ASAP members will be required to submit an application and pay the applicable fee, but less documentation will be required and the application processing time will be shorter.

3. ETP/Equity ASAP Rollout Process

The Exchange has proposed a nine-month rollout period during which equity specialists, floor brokers, their firms, and PCX seat owners may decide to convert to ETPs and current ASAP members can decide to convert to Equity ASAPs. The monthly fee be charged for ETPs during the rollout period will be closely correlated, but discounted, to the current prevailing monthly lease rate for PCX memberships and will decrease proportionately over that period until it reaches $2,000 per month in the tenth month following inception. Equity ASAP Holders will be charged an annual fee of $4,000.

During the rollout period, both PCX members and ETP Holders will be permitted to trade equities on the equity trading floors of the PCX. Similarly, both ASAP holders and Equity ASAP Holders will be provided automated system access as set forth in the proposed PCX Equities Rules.

At the end of the rollout period, all individuals executing equity trades through PCX Equities must hold either an ETP or an Equity ASAP. After the rollout period, PCX memberships will no longer confer rights to trade, to route orders, or to be a clearing give-up through the equity trading facilities of PCX Equities.

4. Cost of ETPs and Equity ASAPs

The fees for an ETP will be assessed on a monthly basis and the fee for an Equity ASAP will be assessed on a yearly basis. The fees will be set by PCX Equities at a fixed level but will be subject to change.

The management of PCX Equities will recommend changes to the initial rates and charges as deemed appropriate for the development of new business or in response to competitive changes. All such rate changes shall be subject to the approval of the PCX Board and filing with the Commission.

[26] Issuers will continue to have a right of appeal, as set forth in proposed PCX Equities Rules 5.5(m).

[27] Pursuant to proposed PCX Equities Rule 2.16, Equity ASAP Holders must execute 80 percent of their total trades and volume on PCX Equities through P/COAST, Optimark or other systems approved by PCX Equities. The balance of their total volume and trades on PCX Equities can be entered by telephone to a floor broker located in a firm booth on the trading floor.

[28] *See supra* note 24.

[29] As described further below, ETP Holders and Equity ASAP Holders are considered members of the PCX for statutory purposes. *See infra* Section IV.

5. Non-transferability of ETP and Equity ASAPS

ETPs and Equity ASAPs will not be transferable by sale or lease, but they may be transferred between individuals within the same firm in accordance with the proposed Rules of PCX Equities.

C. PCX

1. Options Trading

Current PCX members who made only equities or who trade equities and options of the PCX must obtain either an ETP or Equity ASAP by the end of the rollout period as described above. For those PCX members who currently trade only options on the PCX, the proposed restructing will not affected their access to or activities on the PCX's options trading facilities. PCX memberships will continue to be required to transact options business on PCX. After the rollout period, however, PCX memberships will no longer confer rights to trade on the equity floors or electronically through the equity trading facilities or to be a clearing give-up for the equity trading facilities. After the completion of the restructing, PCX memberships may be purchased, sold, or leased as they are today. The rights of PCX members upon the liquidation of PCX will remain unchanged.

2. National Market System Plans

The PCX currently is a participant in various NMS plans, including the Consolidated Tape Association (''CTA'') Plan, the Consolidate Quotation System (''CQS'') Plan, the Intermarket Trading System (''ITS'') Plan and the Options Price Reporting Authority (''OPRA''). These plans are joint industry plans for SROs that address last sale reporting, quotation reporting, intermarket trading, and options last sale and quote reporting, respectively. Following the creation of PCX Equities, PCX, in its continuing role as the SRO, will continue to serve as the voting member of these NMS Plans. Nevertheless, PCX expects that, for those plans that relate to equity trading, *i.e.,* the CTA Plan, the CQS Plan and the ITS Plan, a PCX Equities representative will serve as the PCX's representative in dealing with these plans.

III. Summary of Comments

The Commission received 26 comment letters on the proposal. All 26 commenters supported the proposal to create PCX Equities.[30] Many commenters believe that the proposed structure will allow PCX to better compete with alternative trading venues and that the restructuring is critical to restore the PCX's equities trading business to profitability.

IV. Discussion

After careful review, the Commission finds that the proposed rule change is consistent with the requirements of the Act and the rules and regulations thereunder applicable to a national securities exchange.[31] In particular, the Commission believes that the proposal is consistent with the requirements of Sections 6(b)(1), 6(b)(2), 6(b)(3), 6(b)(4), 6(b)(5), 6(b)(6), 6(b)(7), and 6(b)(8).[32]

This proposal represents a significant departure from the traditional member-based exchange structure. The PCX proposes to institute a new framework by creating a separate corporation, PCX Equities, to house its equities trading and related clearing functions. In moving to a corporate structure for its equities business, PCX will not confer on its equity trading participants the exact same rights and benefits that otherwise accrue to existing Exchange members. In lieu of memberships, PCX Equities will issue trading permits, *i.e.,* ETPs and Equity ASAPs, to those persons and entities that wish to effect transactions in equity securities on the Exchange's trading floors or facilities. Instead of an ownership right in the Exchange that may be bought, sold, or leased, a trading permit will provide its holder solely with the ability to trade equity securities on PCX Equities or through its facilities.

Traditionally, national securities exchanges have been structured as membership organizations. While this type of organization has proved suitable for the exchanges over the years, the Commission clarified in the ATS Release[33] that other structures could also satisfy the requirements of the Act. The Commission has considered the issues raised under the Act by PCX Equities' proposed corporate structure and its issuance of trading permits and finds that the proposal is consistent with the requirements of the Act.

As discussed further below, while PCX is proposing to delegate some of its responsibilities and functions to PCX Equities, as the statutory SRO and registered exchange PCX will remain ultimately responsible for the activities of PCX Equities and its ETP and Equity ASAP Holders. Moreover, the structure and rules of PCX Equities assure fair representation of the ETP and Equity ASAP Holders, consistent with the Act.

A. PCX Responsibilities and Delegation of Self-Regulatory Authority

Although ETPs and Equity ASAPs are not like the traditional memberships of the Exchange, the holders of such permits are considered members of the PCX for purposes of the Act.[34] In proposed PCX Equities Rules 1.1(l) and (j), ETP Holders and Equity ASAP Holders have been specifically defined as members of the PCX consistent with Section 3(a)(3)(A) of the Act.[35] Section 3(a)(3)(A) defines a member with respect to a national securities exchange as a natural person who is permitted to effect transactions on the floor of an exchange without the services of another person acting as a broker, any

[30] *See* Letters from Arnold Staloff, President and CEO, Bloom Staloff, to Jonathan G. Katz, Secretary, SEC, dated December 17, 1999; Leopold Korins, President and CEO, Securities Traders Association, to Jonathan G. Katz, Secretary, SEC, dated December 23, 1999; Douglas Rountree, Member, PCX, to Jonathan G. Katz, Secretary, SEC, dated December 21, 1999; Scott Elisha, Member, PCX, to Jonathan G. Katz, Secretary, SEC, dated December 21, 1999; Robert Pagnini, Member, PCX, to Jonathan G. Katz, Secretary, SEC, dated December 21, 1999; Jeffrey C. Hauke, Member, PCX, to Jonathan G. Katz, Secretary, SEC, dated December 21, 1999; Donald M. Abramson, Member, PCX, to Jonathan G. Katz, Secretary, SEC, dated December 21, 1999; Kenneth Fong, Member, PCX, to Jonathan G. Katz, Secretary, SEC, dated December 21, 1999; Ronald Chin, Member, PCX, to Jonathan G. Katz, Secretary, SEC, dated December 21, 1999; Ray Crown, Member, PCX, to Jonathan G. Katz, Secretary, SEC, dated December 21, 1999; Douglas J. Engmann, President and CEO, ABN–AMRO, to Jonathan G. Katz, Secretary, SEC, dated December 28, 1999; Robert G. Kirby, Capital Guardian Trust Co., to Jonathan G. Katz, Secretary, SEC, dated December 22, 1999; Craig A. Resnick, to Jonathan G. Katz, Secretary, SEC, dated December 30, 1999; Allan Leong, Member, PCX, to Jonathan G. Katz, Secretary, SEC, dated December 21, 1999; John W. Brown and L. Matthew Adams, Managing Members, M.J.T. Securities, LLC, to Jonathan G. Katz, Secretary, SEC, dated December 27, 1999; Douglas Gooding, Member, PCX, to Jonathan G. Katz, Secretary, SEC, dated December 21, 1999; Edward Doherty, Member, PCX, to Jonathan G. Katz, Secretary, SEC, dated December 21, 1999; Larry Colvin, Member, PCX, to Jonathan G. Katz, Secretary, SEC, dated December 21, 1999; Richard and Vivian Chapnick, Members, PCX, to Jonathan G. Katz, Secretary, SEC, dated December 21, 1999; Mark Gattly, Member, PCX, to Jonathan G. Katz, Secretary, SEC, dated December 21, 1999; Dr. Martin Jansen, Member, PCX, to Jonathan G. Katz, Secretary, SEC, dated December 21, 1999; Sheldon Cohen, Member, PCX, to Jonathan G. Katz, Secretary, SEC, dated December 21, 1999; Edward Hager, Member, PCX, to Jonathan G. Katz, Secretary, SEC, dated December 21, 1999; Daniel A. Gooze, Member, PCX, to Jonathan G. Katz, Secretary, SEC, dated December 21, 1999; Joseph Breger, Member, PCX, to Jonathan G. Katz, Secretary, SEC, dated December 21, 1999; Carol O'Neill, to Jonathan G. Katz, Secretary, SEC, dated December 21, 1999.

[31] In approving this proposal, the Commission has considered its impact on efficiency, competition, and capital formation. 15 U.S.C. 78c(f).

[32] 15 U.S.C. 78f(b)(1)–(8).

[33] *See Regulation of Exchanges and Alternative Trading Systems,* Securities Exchange Act Release No. 40760 (December 8, 1998), 63 FR 70844 (December 22, 1998) (''ATS Release'').

[34] In this order, the term ''member'' refers to an ETP Holder, ETP Firm or an Equity ASAP Holder, which are considered statutory members of the PCX for purposes of the Act.

[35] 15 U.S.C. 78c(a)(3)(A).

registered broker or dealer with which such natural person is associated, or any other registered broker-dealer that agrees to be regulated by the Exchange. Thus, as members of the PCX, ETP Holders and Equity ASAP Holders and their related firms and associated persons will be subject to the self-regulatory authority of the PCX.

As part of its restructuring proposal, PCX has filed with the Commission a Delegation Plan, pursuant to which the PCX proposes to delegate to PCX Equities certain self-regulatory functions and responsibilities.[36] PCX, however, retains ultimate self-regulatory authority over decisions made and policies implemented by PCX Equities pursuant to the Delegation Plan, and the PCX remains the SRO responsible for the statutory obligations under the Act.[37] The Exchange proposes that the Delegation Plan become part of the Rules of the PCX and, thus, may only be amended upon Commission approval.[38]

Upon approval of this proposal, PCX Equities will have the delegated authority to, among other things, determine regulatory and trading policies relating to the business conduct and trading activities of ETP Holders, Equity ASAP Holders, and associated persons, develop and adopt necessary and appropriate rule changes, monitor the qualifications of ETP Holders, ETP Firms and Equity ASAP Holders, initiate disciplinary actions to assure compliance with the Rules and procedures of PCX Equities and the federal securities laws, establish and assess fees, and oversee the operation of PCX Equities' trading facilities.

The Commission finds that the PCX's plan of delegation is consistent with the requirements of Section 6(b)(1) of the Act, which requires that an exchange be organized and have the capacity to carry out the purposes of the Act.[39] While the PCX has delegated many of its responsibilities to PCX Equities, it retains ultimate responsibility for ensuring that its equities business is conducted in a manner consistent with the requirements of the Act. Under the Delegation Plan and the Rules of the Exchange, PCX will continue to carry out its statutory responsibilities to enforce compliance by ETP Holders and Equity ASAP Holders, as members of the Exchange, with the Rules of PCX Equities and the federal securities laws and regulations, and will continue to have ultimate responsibility for the administration and enforcement of rules governing the operation of the equities trading business.

PCX also will continue to review and submit to the Commission any proposed changes to PCX Equities' Rules.[40] In addition, PCX will retain the authority to review disciplinary and other regulatory decisions of PCX Equities. These types of checks and balances should ensure that the PCX remains aware of the affairs of its equities business conducted through PCX Equities, and that its equities business is conducted in a manner consistent with the Act.

B. Corporate Structure and Governance of PCX and PCX Equities

1. PCX Equities Board of Directors

As a separate corporate entity, PCX Equities will have its own board of directors and officers that will administer its day-to-day operations. The Commission believes that the PCX Equities' proposed corporate structure is consistent with the Act.

Under Section 6(b)(3) of the Act,[41] the rules of an exchange must assure that its members are fairly represented in the selection of its directors and in the administration of its affairs. Section 6(b)(3)'s fair representation requirement allows statutory members to have a voice in an exchange's use of its self-regulatory authority. Moreover, this statutory requirement helps to ensure that members are protected from unfair, unfettered actions by an exchange pursuant to its rules, and that, in general, an exchange is administered in a way that is equitable to all those who trade on its market or through its facilities.

In traditional exchanges, the fair representation requirement is easily satisfied because most members, as owners of the exchange, vote for the governing board, which, in turn, administers the activities of the exchange. Thus, the majority of members have a voice in all aspects of exchange governance and decision-making, including disciplinary rules, disciplinary appeals, and any exchange rules governing trading off the exchange.

In comparison, a demutualized exchange that is organized as a corporation (as in the case of PCX Equities), by definition, is characterized by the separation of the ownership interest in the exchange from the right to trade. Thus, such exchanges must find alternative ways to ensure that those persons or entities that trade on the exchange without owning an interest in the exchange have a voice in the selection of directors and the administration of the exchange. Otherwise, the governing body potentially could use its self-regulatory authority to act solely in its own commercial interest, to the detriment of members.

In addition, to make sure that the public interest is adequately represented in an exchange's decision-making process, Section 6(b)(3) of the Act[42] states that an exchange's rules must provide that one or more of its directors be representative of issuers and investors, and not associated with a member of the exchange, or with any broker-dealer.

The Commission finds that the PCX Equities' Board, as proposed by PCX, is structured in a manner that satisfies both the fair representation and public participation requirements of Section 6(b)(3) of the Act.[43] As noted above, the PCX proposes that the PCX Equities Board shall consist of no fewer than 10 and no more than 12 directors. The composition is currently contemplated to be: (i) The CEO of PCX; (ii) the President of PCX Equities;[44] (iii) five public directors, at least three of whom must also be members of the PCX Board; (iv) one allied person from an ETP Firm who is also a member of the PCX Board; and (v) two ETP/Equity ASAP Holder Directors.

Regardless of the size of the PCX Equities Board, at least 20 percent of the seats, but in no event fewer than two seats, must be nominated and held by PCX Equities members (*i.e.,* ETP or Equity ASAP Holders).[45] PCX also proposes to amend the composition of its Board of Governors to include a Governor position for an ETP Holder or Equity ASAP Holder.[46] PCX Equities members therefore will have input in

[36] *See supra* note 15.

[37] The Commission notes that the PCX will be the sole shareholder of the PCX Equities. If the PCX's interest in PCX Equities is diluted in the future by, among other things, the sale of additional interests to other persons or entities, PCX Equities may be required to register as an exchange in its own right, pursuant to Section 6 of the Act. The Commission expects the PCX to notify the Commission before its interest in PCX Equities is in any way diminished.

[38] *See* Amendment No. 7, *supra* note 8.

[39] 15 U.S.C. 78f(b)(1).

[40] The PCX Board must review and ratify all PCX Equities proposed rule changes before they are submitted to the SEC. *See* Delegation Plan, *supra* note 15, and proposed PCX Equities Rule 3.4.

[41] 15 U.S.C. 78f(b)(3).

[42] *Id.*

[43] *Id.*

[44] Employees of PCX Equities and PCX are classified as industry members.

[45] *See* proposed PCX Equities Bylaws, Article III, Section 3.02(a).

[46] *See* proposed PCX Constitution, Article III, Section 2(b).

the administration of the affairs of PCX Equities and the Exchange.[47]

In addition, the PCX Equities Board, as proposed, contains 50 percent public representation. The PCX has proposed that a public director be defined as a person not affiliated with a broker or dealer. This definition is consistent with the definition currently found in the PCX Constitution.[48] While the Commission is satisfied that this definition is consistent with the Act, it encourages the PCX to consider amending this definition in the future to exclude those persons that may have a material business relationship with the Exchange or PCX Equities.[49]

The Commission has previously stated its belief that the inclusion of public, non-industry representatives on exchange oversight bodies is critical to make certain that an exchange actively works to protect the public interest in the exchange governance process.[50] Further, public representatives help to ensure that no single group of market participants has the ability to systemically disadvantage other market participants through the exchange governance process. The Commission believes that public directors can provide unique, unbiased perspectives, which should enhance the ability of the PCX Equities Board to address issues in a non-discriminatory fashion and foster the integrity of PCX Equities. In this way, the public directors may help to prevent unfair discrimination between customers, issuers, brokers, or dealers in the administration of PCX Equities, and protect investors and the public interest, consistent with the provisions Section 6(b)(5) of the Act.[51]

2. PCX Equities' Committees [52]

In an effort to streamline its management, the PCX has proposed to eliminate many of the committees currently used in the administration of the affairs of PCX's equities activities. PCX Equities will have four committees, which will provide limited member involvement in the administration of the day-to-day operations of the Exchange.[53] Specifically, there will be a Nominating Committee, a Business Conduct Committee, and a Member Advisory Committee. In addition, PCX Equities will have one Board committee, the Board Appeals Committee.

a. *Nominating Committee.* The Nominating Committee of PCX Equities will be responsible for the selection of the ETP/Equity ASAP Holder Directors and the ETP/Equity ASAP Holder Governor. Under the PCX's proposal, the PCX Equities Nominating Committee will nominate two candidates for the PCX Equities Board and one candidate for the PCX Board.[54] These candidates will represent ETP Holders and Equity ASAP Holders on the respective Boards. The Nominating Committee will consist of seven members, six of whom will be ETP Holders or Equity ASAP Holders or allied persons of ETP Firms or Equity ASAP Holders and one of whom will be a member of the public. Each member constituency (*i.e.,* ETP Holders and Equity ASAP Holders) must have representation on the Nominating Committee that is equal to or greater than its percentage representation among all trading permit holders, with a minimum of one representative from each member constituency.[55]

Each year, the Nominating Committee will propose a slate of two eligible candidates for the PCX Equities Board and one eligible candidate for the PCX Board.[56] The slate put forth by the Nominating Committee will automatically be deemed to be selected by the members of PCX Equities without an actual vote. Members, however, will be able to submit additional candidates by way of petition. If 10 percent of all PCX Equities members counted as a single unit support an additional candidate, such candidate will be added to the slate and an actual member vote will be held to select the two nominees for the PCX Equities Board, or the one nominee for the PCX Board, or the nominees for both Boards, as the case may be.

The Commission finds that the composition of the Nominating Committee is consistent with the requirements of Section 6(b)(3) of the Act.[57] Because the Nominating Committee is responsible for selecting member representatives for the PCX Equities Board and the PCX Board, its composition should generally reflect the composition of the members (*i.e.,* the users) of the exchange. The Commission finds that the PCX Equities Nominating Committee's composition assures that both ETP Holders and Equity ASAP Holders will be represented in the selection of their PCX Equities Board and PCX Board representatives by providing that each constituency is proportionally represented, with a minimum of one person from each constituency.

Further, the Commission believes that the selection process provides members with an additional opportunity to select their directors, consistent with the requirements of Section 6(b)(3).[58] Although the slate of the Nominating Committee will be automatically deemed selected without a member vote, PCX Equities members are able to actively participate in the nomination process by way of petition. Thus, if a group of members is dissatisfied with the Nominating Committee's proposed slate, the PCX Equities members have the ability to force a member vote by petitioning to add a candidate. The Commission believes that the petition process is a fair and reasonable way for members to be involved in the selection of their representatives for the PCX Equities Board and PCX Board.

b. *Business Conduct Committee.* The Business Conduct Committee will have the following functions and authority: (i) To examine the business conduct and financial condition of ETP Holders, ETP Firms and Equity ASAP Holders and their associated persons; (ii) to conduct hearings and render decisions in summary disciplinary actions and proceedings; (iii) to impose appropriate sanctions of expulsion, suspension, fine, censure or any other fitting sanctions where the Committee finds that a violation within the disciplinary jurisdiction of PCX has been committed; and (iv) to require the production of detailed financial reports of an ETP Holder, ETP Firm, or Equity ASAP Holder.

The Business Conduct Committee will not have a fixed size. Rather, the PCX

[47] PCX Equities members will also play a role in the process to nominate a Governor for the PCX Board. *See* Section IV.B.2.a, *infra.*

[48] *See* PCX Constitution Article II, Section 1(a).

[49] The Commission notes that the National Association of Securities Dealers, Inc. (''NASD'') and the Chicago Stock Exchange, Inc. (''CHX'') currently classify their board members as either industry/member, non-industry or public. The PCX Equities' definition of public is comparable to the NASD and CHX definition of non-industry. In contrast, the public member defined by the NASD and CHX as a person who has no material business relationship with a broker or dealer or the Association or the exchange, as the case may be. *See* NASD By-laws, Article I; CHX Constitution, Sections 2 and 10.

[50] *See* ATS Release, *supra* note 33.

[51] 15 U.S.C. 78f(b)(5).

[52] *See generally* proposed PCX Equities Rule 3.

[53] If PCX Equities decides to establish an executive committee, the Commission believes that its composition should reflect the composition of the PCX Equities Board.

[54] *But see* note 56, *infra.*

[55] For example, if Equity ASAP Holders constituted 10 percent of all trading permit holders on the PCX Equities, they would be entitled to at least one Equity ASAP representative on the Nominating Committee. If, however, the number of Equity ASAP Holders grew to 34 percent of all trading permit holders, then the Nominating Committee would have to include at least two Equity ASAP Holder representatives.

[56] A single person may be nominated for one of the ETP/Equity ASAP Holder Director positions and the ETP/Equity ASAP Holder Governor position. *See* proposed PCX Equities Rule 3.2(b)(2)(C)(1).

[57] 15 U.S.C. 78f(b)(3).

[58] *Id.*

Equities' management may determine the size of the Committee, as it deems appropriate. In addition to members of the public, the Business Conduct Committee will have proportional representation of ETP Holders and Equity ASAP Holders, with a minimum of one ETP Holder or allied person of an ETP Firm, and one Equity ASAP Holder or allied person of an Equity ASAP Holder, similar to that required for the Nominating Committee.[59] Therefore, all constituencies of the PCX Equities are guaranteed some input into the decisions of the Business Conduct Committee.

The Commission finds that the stated functions of the Business Conduct Committee, as set forth in the PCX Equities Rules, are consistent with the Act. The Rules relating to the Business Conduct Committee are consistent with Section 6(b)(6)[60] of the Act because they provide the committee with the authority to ensure that members are appropriately disciplined for violations of PCX Equities' Rules, as well as for violations of the rules and regulations of the of the Act.

In the Commission's view, the proposed composition of the Business Conduct Committee is consistent with the requirements of Sections 6(b)(3)[61] and 6(b)(7)[62] of the Act because it contains a member from each member constituency and thus provides both ETP Holders and Equity ASAP Holders with a fair and representative voice in the administration of PCX Equities' affairs, in particular, disciplinary proceedings. The Commission believes that there should be a level of actual member involvement in the disciplinary process of a demutualized exchange, similar to that practiced today on traditional member-owned exchanges. The Commission believes that exchange members should be permitted to participate in disciplinary proceedings by serving as members of the hearing panels that oversee the disciplinary process, and should also be included in the panels or committees that hear appeals in order to promote procedural fairness. The Commission finds that the proposed Business Conduct Committee adequately meets these goals.

c. *Member Advisory Committee.* The PCX has proposed to establish a Member Advisory Committee, which will act in an advisory capacity regarding rule changes that relate to disciplinary matters and off-board trading rules. The CEO of PCX Equities will appoint the members of this committee for one-year terms, and any member in good standing may be eligible to be appointed to the Committee.

The Commission believes that the Member Advisory Committee should provide members with the ability to provide input into the self-regulatory process. Members, by virtue of their positions, have first-hand knowledge about the workings of the markets. The Member Advisory Committee should help prevent potentially inappropriate or discriminatory disciplinary rules and off-board trading rules from being adopted by PCX Equities and help to ensure that the rules of PCX Equities are consistent with just and equitable principles of trade.

d. *Board Appeals Committee.* Decisions of PCX Equities made by the Business Conduct Committee and the staff of PCX Equities relating to, among other things, disciplinary matters, issuances of trading permits, and listings and delistings, may be appealed to the Board Appeals Committee. The Board Appeals Committee, which will be appointed by the PCX Equities Board, will include at least one public director of the PCX Equities Board and at least one ETP/Equity ASAP Holder Director.[63]

The Commission finds that the proposed composition and authority of the Board Appeals Committee are consistent with Section 6(b)(3)[64] and Section 6(b)(7)[65] of the Act, respectively.[66] The Board Appeals Committee will have of at least one ETP/Equity ASAP Holder Director that will represent the membership in helping assure that decisions of the Business Conduct Committee and the staff are made in a fair and impartial manner. In addition, the PCX's proposal is consistent with Section 6(b)(7)'s[67] requirement that an exchange establish fair procedures for disciplining members and persons associated with members, denying memberships, barring persons from seeking to become members, and prohibiting or limiting access to services. The Board Appeals Committee, as proposed, has appellate jurisdiction over various categories of disciplinary proceedings and other regulatory decisions, such as denials of ETP and Equity ASAP applications, issuances of floor citations and minor rule plan sanctions, delisting decisions, and sanctions for violations of PCX Equities' Bylaws, Rules, policies, regulations and procedures promulgated under the Act. Moreover, aggrieved PCX Equities members may appeal the decision of the Board Appeals Committee to the PCX Board of Governors and, ultimately, to the Commission.[68]

In sum, the Commission finds that the Board Appeals Committee's structure and jurisdiction appears to provide for a fair procedure for disciplining members and associated persons and overseeing the denial of access to PCX Equities or its services, in satisfaction of the standards set forth in Section 6(b)(7) of the Act.[69]

C. Proposed PCX Equities Rules

The majority of the rules proposed by PCX to govern PCX Equities' trading operations are closely patterned on PCX's existing rules.[70] The proposed rules contain changes to reflect the new structure whereby trading permits will be issued to persons or entities conducting business on PCX Equities. With the exception of proposed PCX Equities Rules 1, 2, 3, and 10, the proposed PCX Equities Rules are substantially similar and generally consistent with the PCX Rules that were previously filed with and approved by the Commission. In some cases, existing rules have been restated and clarified and obsolete references have been deleted to reflect the new equities subsidiary.

1. Proposed PCX Equities Rule 1

Proposed PCX Equities Rule 1 defines the terms and references (*e.g.,* ETP Holder) that are used throughout the proposed rules to ensure uniformity and to conform rule terminology to the demutualized entity. The Commission finds that proposed PCX Equities Rule 1 is consistent with Section 6(b)(5) of the Act, which requires, among other things, that the rules of an exchange be designed to facilitate transactions in securities and to remove impediments to and perfect the mechanism of a free and open market and a national market system and not to permit unfair

[59] *See supra* note 55 for an example of how the proportional composition of the Nominating Committee will be determined. The Business Conduct Committee's composition will be determined using the same method.

[60] 15 U.S.C. 78f(b)(6).

[61] 15 U.S.C. 78f(b)(3).

[62] 15 U.S.C. 78f(b)(7).

[63] *See* Amendment No. 6, *supra* note 8, and proposed PCX Equities Rule 3.3(a)(1)(A).

[64] 15 U.S.C. 78f(b)(3).

[65] 15 U.S.C. 78f(b0(7).

[66] At a minimum, the Commission believes that any committee responsible for appeals of disciplinary matters should have an equal number of non-industry or public members as it has industry members.

[67] *Id.*

[68] *See* proposed PCX Equities Rule 10.8.

[69] 15 U.S.C. 78f(b)(7).

[70] As stated earlier, the PCX Equities' Rules remain the Rules of the PCX for purposes of the Act and any proposed changes to those Rules must be submitted by the PCX to the Commission for approval, under Section 19(b) of the Act.

discrimination between customers, issuers, brokers or dealers.[71] The Commission believes that these definitions are necessary and appropriate additions to the existing PCX Rules because they provide an important overview of the restructured PCX Equities entity and its members (*i.e.,* ETP Holders and Equity ASAPs Holders).

2. Proposed PCX Equities Rule 2

Proposed PCX Equities Rule 2 describes the application process, the qualification requirements and other requirements for holding an ETP or Equity ASAP. Although these provisions are similar to the requirements and procedures currently found in PCX Rule 1 and the PCX Constitution, the PCX made certain substantive changes to the application and qualification requirements to reflect the characteristics of the new ETPs and Equity ASAPs.

PCX Equities will issue these permits to persons that satisfy the respective qualification requirements.[72] The qualification requirements and the application process have been modeled after the current procedures and rules employed by the PCX for PCX memberships and PCX ASAPs. The PCX has stated that it will not limit the number of permits that it will issue. Current PCX members will need to submit an application and pay a fee to receive a trading permit, but because they have already satisfied the requirements for PCX membership, the process will be less time intensive. For new applicants, the process will be substantially similar to the current PCX process except that the approval and disapproval decisions will be made by the management of PCX Equities instead of a membership committee. The Commission finds that the PCX has satisfied the requirements of Section 6(b)(2) of the Act[73] because it has proposed rules that will enable any broker-dealer registered under Section 15 of the Act[74] that satisfies the qualification requirements to become a member of the Exchange.

3. Proposed PCX Equities Rule 3

Proposed PCX Equities Rules 3.1 through 3.3 discuss in detail the proposed committee structure. These proposed rules cover the functions and compositions of the Business Conduct Committee, Nominating Committee, Member Advisory Committee, and the Board Appeals Committee. For the reasons discussed in Section IV.B., above, the Commission finds that these Rules are consistent with the Act.

Proposed PCX Equities Rules 3.4 through 3.6 discuss the proposed delegation of authority from the PCX to PCX Equities. For the reasons discussed in Section IV.A., above, the Commission finds that the proposed delegation of self-regulatory authority from the PCX to PCX Equities is appropriate and consistent with the Act.

4. Proposed PCX Equities Rule 10

Proposed PCX Equities Rule 10 sets forth the disciplinary process for PCX Equities.[75] While proposed PCX Equities Rule 10 is substantially similar to the current PCX disciplinary procedures, the PCX has submitted some substantive changes relating to the independence of the PCX Equities regulatory staff and *ex parte* communications. The Commission finds that the disciplinary provisions contained in proposed PCX Equities Rule 10 are consistent with Sections 6(b)(5), 6(b)(6) and 6(b)(7) of the Act.[76] Section 6(b)(5) generally requires that the rules of an exchange be designed to prevent fraudulent and manipulative acts and practices and to protect investors and the public interest.[77] Section 6(b)(6) requires, among other things, that the rules of an exchange provide that its members shall be appropriately disciplined for violations of the Act, the rules and regulations thereunder, or the rules of an exchange.[78] Section 6(b)(7) requires that the rules of an exchange, among other things, should provide a fair procedure for disciplining members.[79]

Pursuant to proposed PCX Equities Rule 10.2, although any person, including PCX Equities Board members and PCX Equities committee members, will be permitted to bring potential violations to the attention of the PCX Equities' regulatory staff, the regulatory staff will have the exclusive authority to determine whether to investigate potential violations within the disciplinary jurisdiction of the PCX Equities. The Commission believes that this provision should prevent commercial interests of members from improperly influencing the disciplinary process, consistent with the requirements of Section 6(b)(7).[80] This aspect of the proposed Rule should help to ensure that the disciplinary process operates in a fair manner without potential improper, unrelated business influences.

The Commission believes that the Exchange has struck an appropriate balance by permitting PCX Equities' directors and committee members to submit complaints alleging possible violations of PCX Equities Rules and violations of the Act to the regulatory staff of PCX Equities for investigation, but then prohibiting them from further participation in the investigation or proceedings. In this way, the directors and committee members continue have the ability to bring potential violations to the attention of the regulatory staff, but are not given undue control and influence over the proceedings.

The Commission further finds that the explicit prohibition in the proposed Rule against interference by the PCX Equities Board and other non-regulatory staff persons with any pending investigation or disciplinary proceeding is appropriate. The proposed Rule ensures that persons responsible for investigations and disciplinary proceedings should enjoy autonomy and independence.

Proposed PCX Equities Rule 10.4 provides that only the regulatory staff of PCX Equities has the authority to determine whether there is probable cause to issue a formal complaint, *i.e.,* probable cause for finding that a violation within the disciplinary jurisdiction of PCX Equities has occurred and that further proceedings are warranted. The Commission believes that giving the regulatory staff independence will allow for a vigorous and evenhanded enforcement program.

Proposed PCX Equities Rule 10.3 defines and prohibits *ex parte* communications between various participants in the disciplinary process and members of the PCX Equities Board and PCX Board. In the Commission's view, it is appropriate to prohibit *ex parte* communications between the persons, committees and panels responsible for overseeing the disciplinary process, and the parties or their representatives during disciplinary proceedings. The Commission believes that the boundaries set out in the proposed rule defining the prohibited communications should help ensure that no party can unfairly advance his or her position in an investigation or disciplinary proceedings through discussion or other communication outside of the proceeding's forum.

[71] 15 U.S.C. 78f(b)(5).

[72] *See generally* proposed PCX Equities Rule 2.

[73] 15 U.S.C. 78f(b)(2).

[74] 15 U.S.C. 78o.

[75] The Commission recently approved substantially similar proposed changes to the PCX disciplinary Rules. *See* Securities Exchange Act Release No. 42750 (May 4, 2000) (File No. SR–PCX–99–10).

[76] 15 U.S.C. 78f(b)(5)–(7).

[77] 15 U.S.C. 78f(b)(5).

[78] 15 U.S.C. 78f(b)(6).

[79] 15 U.S.C. 78f(b)(7).

[80] *Id.*

Therefore, the Commission finds that the proposed Rule regarding *ex parte* communications is consistent with the requirements of Sections 6(b)(7) by establishing procedures that provide a fair disciplinary forum.

The Commission finds therefore that proposed PCX Equities Rule 10 provides that ETP Holders, ETP Firms, Equity ASAP Holders and associated persons are to be appropriately disciplined, and provides a fair procedure for them for violations of the Act, the rules or regulations thereunder, or the rules of the exchange in accordance with Sections 6(b)(6) [81] and 6(b)(7).[82]

D. Costs of ETPs and Equity ASAPs

In connection with the new trading permits, the PCX has proposed a new fee structure for its members. ETP Holders will pay a fixed monthly amount to PCX Equities, while Equity ASAP Holders will pay a fixed annual amount. The PCX has proposed a graduate fee schedule for ETP's during the first nine months after PCX Equities has been established, which will be correlated to the current prevailing monthly lease rate for PCX memberships.

The Commission finds that the proposed trading permit fees to be consistent with the requirements of Section 6(b)(4) of the Act [83] that the Exchange allocate its fees fairly among its members. The Exchange has proposed fees based on the type of permit issued and, thus, the fees are based on the type of access and services provided to members. The Commission finds that establishing the fees in this manner to be consistent with Section 6(b)(4) of the Act.[84]

E. Amendment Nos. 3–7

For the reasons discussed below, the Commission finds good cause for approving Amendment Nos. 3 through 7 to the proposed rule change prior to the thirtieth day after the date of publication of notice thereof in the **Federal Register**.

1. Amendment No. 3

Amendment No. 3 sets forth proposed changes to the proposed PCX Equities Certificate of Incorporation, proposed PCX Equities Bylaws, proposed PCX Equities Rules 1–7 and 10–12, as well as the proposed PCX Equities Equity Floor Procedure Advices. Amendment No. 3 also amends PCX Rules 2 and 3 to reflect changes made to the corresponding proposed PCX Equities Rules. With the exception of a change to the proposed disciplinary Rule governing *ex parte* communications, the proposed changes in Amendment No. 3 are technical, non-substantive amendments that serve to clarify the intent and application of the proposed rule or correct language or typographical errors.

Proposed PCX Equities Rule 10.3 prohibits certain *ex parte* communications, and contains procedures that require disclosure and a hearing to show cause why the claim or defense of a party that received, and benefited from, a prohibited communication should not be disposed of by an adverse summary decision. In Amendment No. 3, the Exchange added a provision to this proposed Rule that states that a member of the Business Conduct Committee or Conduct Panel must recuse himself or herself from participation in such a hearing if the member has a conflict of interest or bias, or if circumstances otherwise exist where his or her fairness might reasonably be questioned.

The Commission finds that the addition of this provision will increase the level of fairness and impartiality in disciplinary proceedings and will aid in the dispassionate application of the disciplinary rules. The Commission believes that the PCX has proposed a reasonable standard under which an adjudicator or participant in the disciplinary process must recuse himself or herself or face disqualification by the Chief Regulatory Officer, or in the event that the Chief Regulatory Officer has a conflict, by the CEO.

In addition, in Amendment No. 3, the Exchange submitted for the Commission's review a draft Shareholder Agreement. Under the terms of the Shareholder Agreement, the PCX agrees to vote all outstanding shares of the PCX Equities to elect to the PCX Equities Board the two representatives of ETP Holders and Equity ASAP Holders nominated by the Nominating Committee, pursuant to proposed PCX Equities Rule 3.[85]

The Commission believes that Amendment No. 3 does not significantly alter the original proposal, which was subject to a full notice and comment period. Moreover, the Commission believes that the changes made to the proposed rules, as well as to the Shareholder Agreement strengthen the proposal and further ensure the Exchange's compliance with the Act through its subsidiary, PCX Equities. Therefore, the Commission finds that granting accelerated approval to Amendment No. 3 is appropriate and consistent with Section 19(b)(2) of the Act.[86]

2. Amendment No. 4

In Amendment No. 4, the PCX proposes to change the number of floor members required to be on the PCX Board at all times from five to two, as is currently required in the PCX Constitution. This change is proposed to make the proposed PCX Constitution consistent with the current PCX Constitution.[87] Amendment No. 4 also sets forth changes to proposed PCX Equities Rule 4 and 10 to ensure that the language of the proposed rules appropriately reflects the new structure of PCX Equities by changing references to ''members'' and the ''Exchange'' to ''ETO Holders,'' ''ETP Firms,'' ''Equity ASAP Holders,'' and the ''Corporation.''

The changes in proposed Amendment No. 4 merely reflect the proposed PCX Equities structure and make the filing consistent with current PCX Rules. Further, the Commission finds that Amendment No. 4 does not significantly alter the original proposal, which was subject to a full notice and comment period. Therefore, the Commission finds that granting accelerated approval to Amendment No. 4 is appropriate and consistent with Section 19(b)(2) of the Act.

3. Amendment No. 5

In Amendment No. 5, the PCX sets forth changes to proposed PCX Equities Rules 6 and 7. Specifically, Amendment No. 5 makes several technical, non-substantive changes to the proposal, such as identifying appropriate cross-references, accurately and fully transferring the PCX rules into the PCX Equities Rules, and correctly applying the proposed Rules to ETP Holders, ETP Firms and Equity ASAP Holders.

The Commission believes that Amendment No. 5 does not significantly alter the original proposal, which was subject to a full notice and comment period. Therefore, the Commission finds that granting accelerated approval to Amendment No. 5 is appropriate and consistent with Section 19(b)(2) of the Act.

[81] 15 U.S.C. 78f(b)(6).

[82] 15 U.S.C. 78f(b)(7).

[83] 15 U.S.C. 78f(b)(4).

[84] *Id.*

[85] As noted earlier, the Commission believes that any modification to the equity ownership of PCX Equities may raise regulatory issues, and thus expects the PCX to notify the Commission in such an event.

[86] 15 U.S.C. 78s(b)(2).

[87] *See* PCX Constitution Article III, Section 2(b); *see also* Securities Exchange Act Release No. 42235 (December 14, 1999), 64 FR 71839 (December 22, 1999).

4. Amendment No. 6

Amendment No. 6 sets forth proposed changes to the proposed PCX Equities Rules 3, 8, 9, 10, 12, and 13, as well as the proposed PCX Equities Equity Floor Procedure Advices. The Amendment makes changes to the process by which PCX Equities members may submit petitions to nominate candidates for positions on the Nominating Committee, the PCX Equities Board, and the PCX Board. The composition requirements of the Nominating Committee, the Business Conduct Committee and the Board Appeal Committee were also further defined. Also, the Exchange created the Member Advisory Committee.

In addition, the Amendment contained minor revisions to *ex parte* communication Rules. Finally, the Exchange submitted technical, non-substantive amendments to the proposed rule language that serve to clarify the intent of the proposed Rules or correct textual or typographical errors.

Proposed PCX Equities Rule 3.2(b)(1)(A) describes and sets forth the composition requirements of the Business Conduct Committee. In Amendment No. 6, the Exchange revised this proposed Rule to state that the Business Conduct Committee shall have proportional representation of all ETP Holders and Equity ASAP Holders, with a minimum of one ETP Holder or allied person of an ETP Firm and one Equity ASAP Holder or an allied person of an Equity ASAP Holder.[88] Similarly, in Amendment No. 6, the Exchange revised proposed PCX Equities Rule 3.2 (b)(2)(A), which sets forth the composition of the Nominating Committee, to provide that the six ETP Equity ASAP Holder representatives on the Nominating Committee shall represent proportionally all ETP Holders, ETP Firms, and Equity ASAP Holders, with a minimum of one ETP Holder or allied person of an ETP Firm and one Equity ASAP Holder or allied person of an Equity ASAP Holder.[89]

Proposed PCX Equities Rules 3.2(b)(2)(B)(i) and 3.2(b)(2)(C)(i) describe the process by which members are appointed to the Nominating Committee and, in turn, the process by which the Nominating Committee facilitates selection of the ETP Holders or Equity ASAP Holders for the PCX Equities Board and the PCX Board. These proposed Rules include a provision whereby ETP Holders and Equity ASAP Holders in good standing may submit a written petition to the Nominating Committee to nominate additional eligible candidates to fill ETP Holder and Equity ASAP Holder positions on the Nominating Committee[90] and on the PCX Board and PCX Equities Board[91] during the next term. In Amendment No. 6, the PCX reduced the aggregate percentage of ETP Holders and Equity ASAP Holders necessary to successfully petition to nominate such candidates from 20 percent to 10 percent.

In addition, in Amendment No. 6, the PCX proposed new PCX Equities Rule 3.2(b)(2)(C)(3), which establishes a Member Advisory Committee that shall act in an advisory capacity regarding proposed rule changes relating to disciplinary matters and off-board trading rules.

Proposed PCX Equities Rule 3.3(a) governs the composition of the Board Appeals Committee. In Amendment No. 6, the PCX revised this Rule to require that each Board Appeals Committee will contain at least one public director and at least one ETP/Equity ASAP Holder Director.

The Commission finds that the above revisions to the composition requirements for the PCX Board, PCX Equities Board and PCX Equities' committees represent reasonable standards intended to satisfy the fair representation and public participation standards required by Section 6(b)(3).[92] In addition, PCX's proposed reduction of the percentage of ETP Holders and Equity ASAPs Holders necessary to successfully petition the Nominating Committee for the addition of alternative candidates is a reasonable proposal designed to ensure fair representation of the PCX membership on the Nominating Committee and PCX Board and PCX Equities Board.

Finally, in Amendment No. 6, the PCX made revisions to several of PCX Equities' disciplinary rules relating to *ex parte* communications. In proposed PCX Equities Rule 10.3(a)(1)–(3), the PCX inserted language to prohibit any interested PCX Equities staff with knowledge of a pending investigation or disciplinary proceeding from making, or knowingly causing to be made, an *ex parte* communication. The PCX also amended proposed PCX Equities Rule 10.3(c) to allow for a disciplinary committee to issue to interested PCX Equities staff responsible for an *ex parte* communication, or who benefited from such a communication, an order to show cause why the claim, defense, or interest should not be adversely affected by reason of such *ex parte* communication.

The Commission finds that the addition of this provision will increase the level of fairness and impartiality in disciplinary proceedings and will aid in the even-handed application of the disciplinary rules. The Commission believes that the PCX has proposed reasonable standards intended to prevent *ex parte* communications involving PCX Equities staff, which satisfies the requirements of Section 6(b)(7) of the Act.[93]

Overall, the Commission finds that the PCX's proposed changes in Amendment No. 6 strengthen and clarify the proposed rule change. Therefore, the Commission finds that granting accelerated approval to Amendment No. 6 is appropriate and consistent with Section 19(b)(2) of the Act.

5. Amendment No. 7

In Amendment No. 7, the Exchange deleted PCX Rule 3 regarding listings and delistings because these provisions will now be part of the PCX Equities Rules. In addition, the PCX proposed to add the Delegation Plan to its Rules as proposed PCX Rule 14. In the Amendment, the Exchange also clarified that summary suspensions, permitted pursuant to PCX Equities Rule 11.2(a), will only be enforced for violations of the Rules of PCX Equities. Finally, the Exchange proposed non-substantive, technical amendments to the language of the proposed PCX Equities Rules.

The Commission finds that proposed changes in Amendment No. 7 further strengthen and clarify the proposed rule change. The Commission believes that Amendment No. 7 does not significantly alter the original proposal, which was subject to a full notice and comment period. Therefore, the Commission finds that granting accelerated approval to Amendment No. 7 is appropriate and consistent with Section 19(b)(2) of the Act.

F. Summary of Commission's Findings

In sum, as discussed above, the Commission believes the proposal to create PCX Equities is consistent with the requirements of the Act and the rules and regulations thereunder applicable to a national securities exchange. Specifically, the Commission finds that the proposal is consistent with the requirements of Sections

[88] *See supra* note 55.

[89] *Id.*

[90] *See* proposed PCX Equities Rule 3.2(b)(2)(B)(i).

[91] *See* proposed PCX Equities Rule 3.2(b)(2)(C)(i).

[92] 15 U.S.C. 78f(b)(3).

[92] 15 U.S.C. 78f(b)(3).

6(b)(1), 6(b)(2), 6(b)(3), 6(b)(4), 6(b)(5), 6(b)(6), 6(b)(7), and 6(b)(8).[94]

In addition, the Commission finds that the proposal is consistent with the requirements of Section 6(b)(1) of the Act.[95] Section 6(b)(1) requires that an exchange be so organized and have capacity to carry out the purposes of the Act. According to the PCX, all revenue generated by the equities business, including ETP and Equity ASAP fees, specialist fees, tape fees, and transaction fees will accrue to PCX Equities.

Further, the PCX has committed to provide PCX Equities with the resources necessary for it to carry out its delegated responsibilities. The Commission expects that the PCX, as the registered exchange ultimately responsible for compliance with the provisions of the Act, will continue to properly fund its subsidiary for such purposes. In addition, the PCX has committed to provide certain services and facilities to help support PCX Equities' trading operations. These services and facilities and their costs will be specifically defined in an agreement between PCX and PCX Equities. The Commission finds that these provisions should enable PCX Equities to fulfill the requirements imposed by the Act, consistent with the PCX's self-regulatory requirements.

Finally, the Commission finds that the proposal is consistent with Section 6(b)(8) of the Act,[96] which requires that the rules of an exchange not impose any burden on competition not necessary or appropriate in furtherance with the Act. The Commission does not believe that the proposed structure will impose any inappropriate burdens on competition.[97]

V. Solicitation of Comments

Interested persons are invited to submit written data, views, and arguments concerning Amendment Nos. 3–7, including whether the proposed amendments are consistent with the Act. Persons making written submissions should file six copies thereof with the Secretary, Securities and Exchange Commission, 450 Fifth Street, NW, Washington, DC 20549–0609. Copies of the submission, all subsequent amendments, all written statements with respect to the proposed amendment that are filed with the Commission, and all written communications relating to the amendment between the Commission and any person, other than those that may be withheld from the public in accordance with the provisions of 5 U.S.C. 552, will be available for inspection and copying at the Commission's Public Reference Room. Copies of such filing also will be available for inspection and copying at the principal office of the PCX. All submissions should refer to File No. SR–PCX–99–39 and should be submitted by June 2, 2000.

VI. Conclusion

For the reasons discussed above, the Commission finds that the proposal is consistent with the Act and the rules and regulations thereunder applicable to a national securities exchange.

It is therefore ordered, pursuant to Section 19(b)(2) of the Act,[98] that the proposed rule change (SR–PCX–99–39), as amended, be and hereby is approved.

For the Commission, by the Division of Market Regulation, pursuant to delegated authority.[99]

Margaret H. McFarland,

Deputy Secretary.

[FR Doc. 00–11920 Filed 5–11–00; 8:45 am]

BILLING CODE 8010–01–M

[94] 15 U.S.C. 78f(b)(1) through (b)(8).

[95] 15 U.S.C. 78f(b)(1).

[96] 15 U.S.C. 78f(b)(8).

[97] The Commission notes that this Section 6(b)(8) finding does not extend to all of the Rules proposed to be PCX Equities Rules. As described above, the majority of the Rules intended to become the Rules of PCX Equities were incorporated from the PCX Rules in their entirety without substantive change and were previously subject to Commission review. Thus, the current finding is limited only to those PCX Equities Rules that have been specifically amended to reflect the restructuring.

[98] 15 U.S.C. 78s(b)(2).

[99] 17 CFR 200.30–3(a)(12).

SECURITIES AND EXCHANGE COMMISSION

[Release No. 34–42762; File No. SR–PHLX–00–37]

Self-Regulatory Organizations; Notice of Filing and Immediate Effectiveness of Proposed Rule Change by the Philadelphia Stock Exchange, Inc. Relating to Starting the Automatic Price Improvement Feature and the Mandatory Manual Double-up Double-down Price Protection Feature at (9:30 A.M.)

May 5, 2000.

Pursuant to Section 19(b)(1) of the Securities Exchange Act of 1934 (''Act''),[1] notice is hereby given that on April 20, 2000, the Philadelphia Stock Exchange, Inc. (''Phlx'' or ''Exchange'') filed with the Securities and Exchange Commission (''SEC'' or ''Commission'') the proposed rule change as described in Items I, II, and III below, which Items have been prepared by the Exchange. The Commission is publishing this notice to solicit comments on the proposed rule change from interested persons.

[1] 15 U.S.C. 78s(b)(1).

I. Self-Regulatory Organization's Statement of the Terms of Substance of the Proposed Rule Change

The Phlx proposes to begin the Automatic Price Improvement feature (''API'') of the Philadelphia Stock Exchange, Inc. Automatic Communication and Execution (''PACE'') System at 9:30 A.M. instead of 9:45 A.M. In addition, the Exchange also proposes to begin the Mandatory Manual Double-up Double-down price protection at 9:30 A.M. instead of 9:45 A.M. The Text of the proposed rule change is available at the Office of the Secretary, the Phlx and at the Commission.

II. Self-Regulatory Organization's Statement of the Purpose of, and Statutory Basis for, the Proposed Rule Change

In its filing with the Commission, the Exchange included statements concerning the purpose of and basis for the proposed rule change and discussed any comments it received on the proposed rule change. The text of these statements may be examined at the places specified in Item IV below. The Exchange has prepared summaries, set forth in sections A, B, and C below, of the most significant aspects of such statements.

A. Self-Regulatory Organization's Statement of the Purpose of, and Statutory Basis for, the Proposed Rule Change

1. Purpose

PACE is the Exchange's automated order routing and execution system on the equity trading floor. The PACE System accepts orders for automatic or manual execution in accordance with the provisions of Phlx Rule 229, which governs the PACE System and defines its parameters. The API feature of the PACE System allows the specialist to voluntarily provide automatic price improvement to market and marketable limit orders to all customers in a security for orders which are 599 shares or less, and when the PACE quote[2] is 3/16 or 1/8 for greater.[3]

The specialist must provide Mandatory Manual Double-up Double-down price protection where the specialist does not agree to use the API

[2] The PACE quote consists of the best bid/offer among the American, Boston, Cincinnati, Chicago, new York, Pacific and Philadelphia Stock Exchanges. *See* Phlx Rule 229.

[3] *See* Phlx Rule 229, Commentary .07(c)(i).

feature. Specifically, Mandatory Manual Double-up Double-down price protection is used to provide price improvement for those securities that the specialist has determined are not appropriate for the API feature because the security is less liquid or less volatile.[4]

Currently, both the API feature and the Mandatory Manual Double-up Double-down price protection begin at 9:45 A.M. The Exchange proposes to begin both features at 9:30 A.M., when the market generally opens. The PACE timer will be reset to start the API feature fifteen minutes earlier, which should in turn permit those orders that were excluded due to time constraint to receive the benefits of the price improvement through the API feature. The time change for the Mandatory Manual Double-up Double-down price protection will require the specialist to begin the same obligations fifteen minutes earlier. This will allow those stocks which are not subject to automatic price improvement to receive the benefits of Mandatory Manual Double-up Double-down price protection fifteen minutes earlier.

2. Statutory Basis

The Exchange believes the proposed rule change is consistent with Section 6(b)[5] of the Act, in general, and furthers the objectives of Section 6(b)(5),[6] in particular, in that it is designed to remove impediments to and perfect the mechanism of a free and open market and a national market system, as well as to protect investors and the public interest by enhancing efficiency through automation and providing automatic price improvement to more equity orders.

B. Self-Regulatory Organization's Statement on Burden on Competition

The Exchange does not believe that the proposed rule change would impose any inappropriate burden on competition.

C. Self-Regulatory Organization's Statement on Comments on the Proposed Rule Change Received From Members, Participants or Others

The Exchange has neither solicited nor received written comments on the proposed rule change.

[4] *See* Securities Exchange Act Release No. 39548 (January 13, 1998), 63 FR 3596 (January 23, 1998) (order approving API feature and Mandatory Manual Double-up Double-down price protection).

[5] 15 U.S.C. 78f(b).

[6] 15 U.S.C. 78f(b)(5).

III. Date of Effectiveness of the Proposed Rule Change and Timing for Commission Action

Pursuant to Section 19(b)(3)(A)[7] of the Act and Rule 19b–4(e)(6)[8] thereunder, the proposed rule change has become effective upon filing as it effects a change that: (1) Does not significantly affect the protection of investors or the public interest; (2) does not impose any significant burden on competition; and (3) by its terms, does not become operative for 30 days from the date of filing, or such shorter time that the Commission may designate if consistent with the protection of investors and the public interest. The Exchange has requested that the Commission accelerate the operative date of the proposal in order for the new 9:30 start time for both the API Feature and the Mandatory Manual Double-up Double-down price protection provision to become operative promptly.

The Commission finds good cause for accelerating the operative date of the proposal as of the date of this notice.[9] The Commission has previously found that both the API Feature and the Mandatory Manual Double-up Double-down price protection provision may enhance intermarket competition and order execution quality on the Exchange.[10] In addition, the Commission previously found that both features should contribute to the maintenance of orderly markets by Phlx specialists because they help to reduce the price variations occurring from trade to trade on low volume.[11] With the current proposal, investors could receive all of these potential benefits at 9:30 when the market opens. The Commission also notes that the original proposal was published for the full comment period, and the Commission received no comments.

At any time within 60 days of the filing of the proposed rule change, the Commission may summarily abrogate such rule change if it appears to the Commission that such action is necessary or appropriate in the public interest, for the protection of investors, or otherwise in furtherance of the purposes of the Act.

IV. Solicitation of Comments

Interested persons are invited to submit written data, views and arguments concerning the foregoing, including whether the proposed rule change is consistent with the Act. Persons making written submissions should file six copies thereof with the Secretary, Securities and exchange Commission, 450 Fifth Street, N.W., Washington, D.C. 20549–0609. Copies of the submission, all subsequent amendments, all written statements with respect to the proposed rule change that are filed with the Commission, and all written communications relating to the proposed rule change between the Commission and any person, other than those that may be withheld from the public in accordance with the provisions of 5 U.S.C. 552 will be available for inspection and copying in the Commission's Public Reference Room. Copies of such filing will also be available for inspection and copying at the principal office of the Phlx. All submissions should refer to File No. SR–PHLX–00–37 and should be submitted by June 2, 2000.

[7] 15 U.S.C. 78s(b)(3)(A).

[8] 17 CFR 240.19b–4.

[9] For purposes only of accelerating the operative date of this proposal, the Commission has considered the proposed rule's impact on efficiency, competition, and capital formation. 15 U.S.C. 78c(f).

[10] *See supra,* note 4.

[11] *Id.*

For the Commission, by the Division of Market Regulation, pursuant to delegated authority.[12]

Margaret H. McFarland,

Deputy Secretary.

[FR Doc. 00–11919 Filed 5–11–00; 8:45 am]

BILLING CODE 8010–01–M

[12] 17 CFR 200.30–3(a)(12).

TENNESSEE VALLEY AUTHORITY

Paperwork Reduction Act of 1995, as amended by Pub. L. 104–13; Submission for Office of Management and Budget (OMB) Review; Comment Request

AGENCY: Tennessee Valley Authority.

ACTION: Submission for Office of Management and Budget (OMB) Review; comment request.

SUMMARY: The proposed information collection described below will be submitted to the Office of Management and Budget (OMB) for review, as required by the Paperwork Reduction Act of 1995 (44 U.S.C. Chapter 35, as amended). The Tennessee Valley Authority is soliciting public comments on this proposed collection as provided by 5 CFR Section 1320.8(d)(1). Requests for information, including copies of the information collection proposed and supporting documentation, should be directed to the Agency Clearance Officer: Wilma H. McCauley, Tennessee Valley Authority, 1101 Market Street (EB 5B),

Chattanooga, Tennessee 37402–2801; (423) 751–2523.

Comments should be sent to OMB Office of Information and Regulatory Affairs, Attention: Desk Officer for Tennessee Valley Authority no later than June 12, 2000.

SUPPLEMENTARY INFORMATION:

Type of Request: Regular submission, proposal to reinstate, with change, a previously approved collection for which approval has expired.

Title of Information Collection: Farmer Questionnaire-Vicinity of Nuclear Power Plants.

Frequency of Use: On occasion.

Type of Affected Public: Individuals or households, and farms.

Small Businesses or Organizations Affected: No.

Federal Budget Functional Category Code: 271.

Estimated Number of Annual Responses: 150.

Estimated Total Annual Burden Hours: 40.

Estimated Average Burden Hours Per Response: 0.25.

Need For and Use of Information: This survey is used to locate, for monitoring purposes, rural residents, home gardens, and milk animals within a five mile radius of a nuclear power plant. The monitoring program is a mandatory requirement of the Nuclear Regulatory Commission set out in the technical specifications when the plants were licensed.

Jacklyn J. Stephenson,

Senior Manager, Enterprise Operations, Information Services.

[FR Doc. 00–11967 Filed 5–11–00; 8:45 am]

BILLING CODE 8120–08–P

DEPARTMENT OF TRANSPORTATION

Surface Transportation Board

[STB Docket No. AB–6 (Sub–No. 387X)]

The Burlington Northern and Santa Fe Railway Company—Abandonment Exemption—in Stearns County, MN

The Burlington Northern and Santa Fe Railway Company (BNSF) has filed a notice of exemption under 49 CFR 1152 Subpart F—*Exempt Abandonments* to abandon a 4.89-mile line of its railroad between milepost 81.11 near St. Joseph and milepost 86.00 near Collegeville, in Stearns County, MN. The line traverses United States Postal Service Zip Codes 56321, 56374 and 56375.

BNSF has certified that: (1) No local traffic has moved over the line for at least 2 years; (2) any overhead traffic on the line can be rerouted over other lines; (3) no formal complaint filed by a user of rail service on the line (or by a state or local government entity acting on behalf of such user) regarding cessation of service over the line either is pending with the Surface Transportation Board (Board) or with any U.S. District Court or has been decided in favor of complainant within the 2-year period; and (4) the requirements at 49 CFR 1105.7 (environmental reports), 49 CFR 1105.8 (historic reports), 49 CFR 1105.11 (transmittal letter), 49 CFR 1105.12 (newspaper publication), and 49 CFR 1152.50(d)(1) (notice to governmental agencies) have been met.

As a condition to this exemption, any employee adversely affected by the abandonment shall be protected under *Oregon Short Line R. Co.—Abandonment— Goshen,* 360 I.C.C. 91 (1979). To address whether this condition adequately protects affected employees, a petition for partial revocation under 49 U.S.C. 10502(d) must be filed. Provided no formal expression of intent to file an offer of financial assistance (OFA) has been received, this exemption will be effective on June 13, 2000, unless stayed pending reconsideration. Petitions to stay that do not involve environmental issues,[1] formal expressions of intent to file an OFA under 49 CFR 1152.27(c)(2),[2] and trail use/rail banking requests under 49 CFR 1152.29 must be filed by May 22, 2000. Petitions to reopen or requests for public use conditions under 49 CFR 1152.28 must be filed by June 1, 2000, with: Surface Transportation Board, Office of the Secretary, Case Control Unit, 1925 K Street, N.W., Washington, DC 20423.

A copy of any petition filed with the Board should be sent to applicant's representative: Sarah Whitley Bailiff, Senior General Attorney, The Burlington Northern and Santa Fe Railway Company, 2500 Lou Menk Drive, Fort Worth, TX 76131–2828.

If the verified notice contains false or misleading information, the exemption is void *ab initio.*

BNSF has filed an environmental report which addresses the abandonment's effects, if any, on the environment and historic resources. The Section of Environmental Analysis (SEA) will issue an environmental assessment (EA) by May 17, 2000. Interested persons may obtain a copy of the EA by writing to SEA (Room 500, Surface Transportation Board, Washington, DC 20423) or by calling SEA, at (202) 565–1545. Comments on environmental and historic preservation matters must be filed within 15 days after the EA becomes available to the public.

Environmental, historic preservation, public use, or trail use/rail banking conditions will be imposed, where appropriate, in a subsequent decision.

Pursuant to the provisions of 49 CFR 1152.29(e)(2), BNSF shall file a notice of consummation with the Board to signify that it has exercised the authority granted and fully abandoned the line. If consummation has not been effected by BNSF's filing of a notice of consummation by May 12, 2001, and there are no legal or regulatory barriers to consummation, the authority to abandon will automatically expire.

Board decisions and notices are available on our website at ''WWW.STB.DOT.GOV.''

Decided: May 4, 2000.

By the Board, David M. Konschnik, Director, Office of Proceedings.

Vernon A. Williams,

Secretary.

[FR Doc. 00–11840 Filed 5–11–00; 8:45 am]

BILLING CODE 4915–00–P

[1] The Board will grant a stay if an informed decision on environmental issues (whether raised by a party or by the Board's Section of Environmental Analysis in its independent investigation) cannot be made before the exemption's effective date. *See Exemption of Out-of-Service Rail Lines,* 5 I.C.C.2d 377 (1989). Any request for a stay should be filed as soon as possible so that the Board may take appropriate action before the exemption's effective date.

[2] Each offer of financial assistance must be accompanied by the filing fee, which currently is set at $1000. *See* 49 CFR 1002.2(f)(25).

DEPARTMENT OF THE TREASURY

Bureau of Alcohol, Tobacco and Firearms

Proposed Collection; Comment Request

ACTION: Notice and request for comments.

SUMMARY: The Department of the Treasury, as part of its continuing effort to reduce paperwork and respondent burden, invites the general public and other Federal agencies to take this opportunity to comment on proposed and/or continuing information collections, as required by the Paperwork Reduction Act of 1995, Public Law 104–13 (44 U.S.C. 3506(c)(2)(A)). Currently, the Bureau of Alcohol, Tobacco and Firearms within the Department of the Treasury is soliciting comments concerning the Application and Permit For Importation of Firearms, Ammunition and Implements of War.

DATES: Written comments should be received on or before July 11, 2000 to be assured of consideration.

ADDRESSES: Direct all written comments to Bureau of Alcohol, Tobacco and Firearms, Linda Barnes, 650 Massachusetts Avenue, NW., Washington, DC 20226, (202) 927–8930.

FOR FURTHER INFORMATION CONTACT: Requests for additional information or copies of the form(s) and instructions should be directed to Larry White, Chief, Firearms and Explosives Imports Branch, 650 Massachusetts Avenue, NW., Washington, DC 20226, (202) 927–8320.

SUPPLEMENTARY INFORMATION:

Title: Application and Permit For Importation of Firearms, Ammunition and Implements of War.

OMB Number: 1512–0018.

Form Number: ATF F 6, Part 2.

Abstract: This information collection is needed to determine whether firearms, ammunition and implements of war are eligible for importation into the United States. The information is used to secure authorization to import such articles. The form is used by persons who are members of the United States Armed Forces.

Current Actions: There are no changes to this information collection and it is being submitted for extension purposes only.

Type of Review: There are no changes to this information collection and it is being submitted for extension purposes only.

Affected Public: Federal Government, State, Local or Tribal Government.

Estimated Number of Respondents: 9,000.

Estimated Time Per Respondent: 30 minutes.

Estimated Total Annual Burden Hours: 4,500.

Request for Comments

Comments submitted in response to this notice will be summarized and/or included in the request for OMB approval. All comments will become a matter of public record. Comments are invited on: (a) Whether the collection of the information is necessary for the proper performance of the functions of the agency, including whether the information shall have practical utility; (b) the accuracy of the agency's estimate of the burden of the collection of information; (c) ways to enhance the quality, utility, and clarity of the information to be collected; (d) ways to minimize the burden of the collection of information on respondents, including through the use of automated collection techniques or other forms of information technology; and (e) estimates of capital or start-up costs and costs of operation, maintenance, and purchase of services to provide information.

Dated: May 5, 2000.

William J. Earle,

Assistant Director (Management) CFO.

[FR Doc. 00–12005 Filed 5–11–00; 8:45 am]

BILLING CODE 4810–31–P

DEPARTMENT OF THE TREASURY

Bureau of Alcohol, Tobacco and Firearms

Proposed Collection; Comment Request

ACTION: Notice and request for comments.

SUMMARY: The Department of the Treasury, as part of its continuing effort to reduce paperwork and respondent burden, invites the general public and other Federal agencies to take this opportunity to comment on proposed and/or continuing information collections, as required by the Paperwork Reduction Act of 1995, Public Law 104–13 (44 U.S.C. 3506(c)(2)(A)). Currently, the Bureau of Alcohol, Tobacco and Firearms within the Department of the Treasury is soliciting comments concerning the Records of Things of Value to Retailers and Occasional Letter Reports From Industry Members Regarding Information on Sponsorships, Advertisements, Promotions, etc., Under the Federal Alcohol Administration Act.

DATES: Written comments should be received on or before July 11, 2000 to be assured of consideration.

ADDRESSES: Direct all written comments to Bureau of Alcohol, Tobacco and Firearms, Linda Barnes, 650 Massachusetts Avenue, NW., Washington, DC 20226, (202) 927–8930.

FOR FURTHER INFORMATION CONTACT: Requests for additional information or copies of the form(s) and instructions should be directed to Richard Mascolo, Chief, Regulations Division, 650 Massachusetts Avenue, NW., Washington, DC 20226, (202) 927–8210.

SUPPLEMENTARY INFORMATION:

Title: Records of Things of Value to Retailers and Occasional Letter Reports From Industry Members Regarding Information on Sponsorships, Advertisements, Promotions, etc., Under the Federal Alcohol Administration Act.

OMB Number: 1512–0392.

Recordkeeping Requirement ID Number: ATF REC 5190/1.

Abstract: These records and occasional letter reports are used to show compliance with the provisions of the Federal Alcohol Administration Act which prevents wholesalers, producers, or importers from giving things of value to retail liquor dealers, and prohibits industry members from conducting certain types of sponsorships, advertising, promotions, etc. The record retention requirement for this information collection is 3 years.

Current Actions: There are no changes to this information collection and it is being submitted for extension purposes only.

Type of Review: Extension.

Affected Public: Business or other for-profit.

Estimated Number of Respondents: 12,665

Estimated Time Per Respondent: 0.

Estimated Total Annual Burden Hours: 51.

Request for Comments

Comments submitted in response to this notice will be summarized and/or included in the request for OMB approval. All comments will become a matter of public record. Comments are invited on: (a) Whether the collection of information is necessary for the proper performance of the functions of the agency, including whether the information shall have practical utility; (b) the accuracy of the agency's estimate of the burden of the collection of information; (c) ways to enhance the quality, utility, and clarity of the information to be collected; (d) ways to minimize the burden of the collection of information on respondents, including through the use of automated collection techniques or other forms of information technology; and (e) estimates of capital or start-up costs and costs of operation, maintenance, and purchase of services to provide information.

Dated: May 5, 2000.

William T. Earle,

Assistant Director (Management) CFO.

[FR Doc. 00–12006 Filed 5–11–00; 8:45 am]

BILLING CODE 4810–31–P

DEPARTMENT OF THE TREASURY

Bureau of Alcohol, Tobacco and Firearms

Proposed Collection; Comment Request

ACTION: Notice and request for comments.

SUMMARY: The Department of the Treasury, as part of its continuing effort to reduce paperwork and respondent burden, invites the general public and

other Federal agencies to take this opportunity to comment on proposed and/or continuing information collections, as required by the Paperwork Reduction Act of 1995, Public Law 104–13 (44 U.S.C. 3506(c)(2)(A)). Currently, the Bureau of Alcohol, Tobacco and Firearms within the Department of the Treasury is soliciting comments concerning the Applications and Notices, Manufacturers of Nonbeverage Products.

DATES: Written comments should be received on or before July 11, 2000 to be assured of consideration.

ADDRESS: Direct all written comments to Bureau of Alcohol, Tobacco and Firearms, Linda Barnes, 650 Massachusetts Avenue, NW., Washington, DC 20226, (202) 927–8930.

FOR FURTHER INFORMATION CONTACT: Requests for additional information or copies of the form(s) and instructions should be directed to Rich Mascolo, Chief, Regulations Division, 650 Massachusetts Avenue, NW., Washington, DC 20226, (301) 927–8210.

SUPPLEMENTARY INFORMATION:

Title: Applications and Notices, Manufacturers of Nonbeverage Products.

OMB Number: 1512–0378.

Recordkeeping Requirement ID Number: ATF REC 5530/1.

Abstract: These reports are used by ATF district personnel to ensure that the regulated individuals will conduct operations in compliance with the law and regulations. The applications and notices serve to protect the revenue by helping ATF personnel in determining if spirits on which drawback has been claimed have been diverted to beverage use. The record retention requirement for this information collection is 3 years.

Current Actions: There are no changes to this information collection and it is being submitted for extension purposes only.

Type of Review: Extension.

Affected Public: Business or other for-profit.

Estimated Number of Respondents: 640.

Estimated Time Per Respondent: 30 minutes.

Estimated Total Annual Burden Hours: 640.

Request for Comments

Comments submitted in response to this notice will be summarized and/or included in the request for OMB approval. All comments will become a matter of public record. Comments are invited on: (a) whether the collection of information is necessary for the proper performance of the functions of the agency, including whether the information shall have practical utility; (b) the accuracy of the agency's estimate of the burden of the collection of information; (c) ways to enhance the quality, utility, and clarity of the information to be collected; (d) ways to minimize the burden of the collection of information on respondents, including through the use of automated collection techniques or other forms of information technology; and (e) estimates of capital or start-up costs and costs of operation, maintenance, and purchase of services to provide information.

Dated: May 5, 2000.

William T. Earle,

Assistant Director (Management) CFO.

[FR Doc. 00–12007 Filed 5–11–00; 8:45 am]

BILLING CODE 4810–31–P

DEPARTMENT OF THE TREASURY

Bureau of Alcohol, Tobacco and Firearms

Proposed Collection; Comment Request

ACTION: Notice and request for comments.

SUMMARY: The Department of the Treasury, as part of its continuing effort to reduce paperwork and respondent burden, invites the general public and other Federal agencies to take this opportunity to comment on proposed and/or continuing information collections, as required by the Paperwork Reduction Act of 1995, Public Law 104–13 (44 U.S.C. 3506(c)(2)(A)). Currently, the Bureau of Alcohol, Tobacco and Firearms within the Department of the Treasury is soliciting comments concerning the Tobacco Export Warehouse, Record of Operations.

DATES: Written comments should be received on or before July 11, 2000 to be assured of consideration.

ADDRESS: Direct all written comments to Bureau of Alcohol, Tobacco and Firearms, Linda Barnes, 650 Massachusetts Avenue, NW., Washington, DC 20226, (202) 927–8930.

FOR FURTHER INFORMATION CONTACT: Requests for additional information or copies of the form(s) and instructions should be directed to Clifford Mullen, Regulations Division, 650 Massachusetts Avenue, NW., Washington, DC 20226, (202) 927–8210.

SUPPLEMENTARY INFORMATION:

Title: Tobacco Export Warehouse, Record of Operations.

OMB Number: 1512–0367.

Recordkeeping Requirement ID Number: ATF REC 5220/1.

Abstract: These records are maintained at the premises of the regulated individual and are routinely used by ATF personnel during field tax compliance examinations to verify that untaxpaid tobacco products are not being diverted to domestic consumption. This ensures that tax revenues are protected. The record retention requirement for this information collection is 3 years.

Current Actions: There are no changes to this information collection and it is being submitted for extension purposes only.

Type of Review: Extension.

Affected Public: Business or other for-profit.

Estimated Number of Respondents: 221.

Estimated Time Per Respondent: None.

Estimated Total Annual Burden Hours: 1.

Request for Comments

Comments submitted in response to this notice will be summarized and/or included in the request for OMB approval. All comments will become a matter of public record. Comments are invited on: (a) Whether the collection of information is necessary for the proper performance of the functions of the agency, including whether the information shall have practical utility; (b) the accuracy of the agency's estimate of the burden of the collection of information; (c) ways to enhance the quality, utility, and clarity of the information to be collected; (d) ways to minimize the burden of the collection of information on respondents, including through the use of automated collection techniques or other forms of information technology; and (e) estimates of capital or start-up costs and costs of operation, maintenance, and purchase of services to provide information.

Dated: May 5, 2000.

William T. Earle,

Assistant Director (Management) CFO.

[FR Doc. 00–12008 Filed 5–11–00; 8:45 am]

BILLING CODE 4810–31–P

DEPARTMENT OF THE TREASURY

Bureau of Alcohol, Tobacco and Firearms

Proposed Collection; Comment Request

ACTION: Notice and request for comments.

SUMMARY: The Department of the Treasury, as part of its continuing effort to reduce paperwork and respondent burden, invites the general public and other Federal agencies to take this opportunity to comment on proposed and/or continuing information collections, as required by the Paperwork Reduction Act of 1995, Public Law 104–13 (44 U.S.C. 3506(c)(2)(A)). Currently, the Bureau of Alcohol, Tobacco and Firearms within the Department of the Treasury is soliciting comments concerning the Importer's Records and Reports.

DATES: Written comments should be received on or before July 11, 2000 to be assured of consideration.

ADDRESSES: Direct all written comments to Bureau of Alcohol, Tobacco and Firearms, Linda Barnes, 650 Massachusetts Avenue, NW., Washington, DC 20226, (202) 927–8930.

FOR FURTHER INFORMATION CONTACT: Requests for additional information or copies of the form(s) and instructions should be directed to Richard Mascolo, Chief, Regulations Division, 650 Massachusetts Avenue, NW., Washington, DC 20226, (202) 927–8210.

SUPPLEMENTARY INFORMATION:

Title: Importer's Records and Reports.

OMB Number: 1512–0352.

Recordkeeping Requirement ID Number: ATF REC 5170/1.

Abstract: This recordkeeping requirement concerns the records which must be maintained by the importer. The records are used by ATF to verify that operations are being conducted in compliance with the law and to ensure that all taxes and duties have been paid on imported spirits, thus protecting the revenue. The record retention requirement for this information collection is 3 years.

Current Actions: There are no changes to this information collection and it is being submitted for extension purposes only.

Type of Review: Extension.

Affected Public: Federal Government.

Estimated Number of Respondents: 500.

Estimated Time Per Respondent: 30 minutes.

Estimated Total Annual Burden Hours: 251.

Request for Comments

Comments submitted in response to this notice will be summarized and/or included in the request for OMB approval. All comments will become a matter of public record. Comments are invited on: (a) Whether the collection of information is necessary for the proper performance of the functions of the agency, including whether the information shall have practical utility; (b) the accuracy of the agency's estimate of the burden of the collection of information; (c) ways to enhance the quality, utility, and clarity of the information to be collected; (d) ways to minimize the burden of the collection of information on respondents, including through the use of automated collection techniques or other forms of information technology; and (e) estimates of capital or start-up costs and costs of operation, maintenance, and purchase of services to provide information.

Dated: May 5, 2000.

William T. Earle,

Assistant Director (Management) CFO.

[FR Doc. 00–12009 Filed 5–11–00; 8:45 am]

BILLING CODE 4810–31–P

DEPARTMENT OF THE TREASURY

Bureau of Alcohol, Tobacco and Firearms

Proposed Collection; Comment Request

ACTION: Notice and request for comments.

SUMMARY: The Department of the Treasury, as part of its continuing effort to reduce paperwork and respondent burden, invites the general public and other Federal agencies to take this opportunity to comment on proposed and/or continuing information collections, as required by the Paperwork Reduction Act of 1995, Public Law 104–13 (44 U.S.C. 3506(c)(2)(A)). Currently, the Bureau of Alcohol, Tobacco and Firearms within the Department of the Treasury is soliciting comments concerning the Alcohol Fuel Plants (AFP) Records, Reports and Notices.

DATES: Written comments should be received on or before July 11, 2000 to be assured of consideration.

ADDRESS: Direct all written comments to Alcohol, Tobacco and Firearms, Linda Barnes, 650 Massachusetts Avenue, NW., Washington, DC 20226, (202) 927–8930.

FOR FURTHER INFORMATION CONTACT: Requests for additional information or copies of the form(s) and instructions should be directed to Mary Wood, Regulations Division, 650 Massachusetts Avenue, NW., Washington, DC 20226, (202) 927–8210.

SUPPLEMENTARY INFORMATION:

Title: Alcohol Fuel Plants (AFP) Records, Reports and Notices.

OMB Number: 1512–0215.

Form Number: ATF F 5110.75.

Recordkeeping Requirement ID Number: ATF REC 5110/10.

Abstract: The data for this information collection is necessary to determine that persons are qualified to produce alcohol for fuel purposes and to identify such persons. It is also needed to account for distilled spirits produced, verify its proper disposition, keep registrations current and evaluate permissible variations from prescribed procedures. The record retention requirement for this information collection is 3 years.

Current Actions: There are no changes to this information collection and it is being submitted for extension purposes only.

Type of Review: Extension.

Affected Public: Business or other for-profit.

Estimated Number of Respondents: 871.

Estimated Time Per Respondent: 1 hour.

Estimated Total Annual Burden Hours: 871.

Request for Comments

Comments submitted in response to this notice will be summarized and/or included in the request for OMB approval. All comments will become a matter of public record. Comments are invited on: (a) whether the collection of information is necessary for the proper performance of the functions of the agency, including whether the information shall have practical utility; (b) the accuracy of the agency's estimate of the burden of the collection of information; (c) ways to enhance the quality, utility, and clarity of the information to be collected; (d) ways to minimize the burden of the collection of information on respondents, including through the use of automated collection techniques or other forms of information technology; and (e) estimates of capital or start-up costs and costs of operation, maintenance, and purchase of services to provide information.

Dated: May 5, 2000.

William T. Earle,

Assistant Director (Management) CFO.

[FR Doc. 00–12010 Filed 5–11–00; 8:45 am]

BILLING CODE 4810–31–P

[FR Doc. 00–12010 Filed 5–11–00; 8:45 am]

BILLING CODE 4810–31–P

DEPARTMENT OF THE TREASURY

Bureau of Alcohol, Tobacco and Firearms

Proposed Collection; Comment Request

ACTION: Notice and request for comments.

SUMMARY: The Department of the Treasury, as part of its continuing effort to reduce paperwork and respondent burden, invites the general public and other Federal agencies to take this opportunity to comment on proposed and/or continuing information collections, as required by the Paperwork Reduction Act of 1995, Public Law 104–13 (44 U.S.C. 3506(c)(2)(A)). Currently, the Bureau of Alcohol, Tobacco and Firearms within the Department of the Treasury is soliciting comments concerning the National Tracing Center Trace Request and Obliterated Serial Number Trace Request.

DATES: Written comments should be received on or before July 11, 2000 to be assured of consideration.

ADDRESSES: Direct all written comments to Bureau of Alcohol, Tobacco and Firearms, Linda Barnes, 650 Massachusetts Avenue, NW., Washington, DC 20226, (202) 927–8930.

FOR FURTHER INFORMATION CONTACT: Requests for additional information or copies of the form(s) and instructions should be directed to Shirley Blickenstaff, National Tracing Center, Falling Waters, West Virginia 25419, 1–800–788–7133.

SUPPLEMENTARY INFORMATION:

Title: National Tracing Center Trace Request and Obliterated Serial Number Trace Request.

OMB Number: 1512–0541

Form Number: ATF F 3312.1 and ATF F 3312.2.

Abstract: The tracing of crime guns is a principal mission of ATF and is conducted as a centralized operation at the National Tracing Center in Falling Waters, West Virginia. These forms are used by the Federal, State, Local, and International law enforcement community to request that ATF trace firearms used, or suspected to have been used, in crimes.

Current Actions: There are no changes to this information collection and it is being submitted for extension purposes only.

Type of Review: Extension.

Affected Public: Federal Government, State, Local, or Tribal Government.

Estimated Number of Respondents: 99,255.

Estimated Time Per Respondent: 6 minutes per form.

Estimated Total Annual Burden Hours: 198,015.

Request for Comments

Comments submitted in response to this notice will be summarized and/or included in the request for OMB approval. All comments will become a matter of public record. Comments are invited on: (a) Whether the collection of information is necessary for the proper performance of the functions of the agency, including whether the information shall have practical utility; (b) the accuracy of the agency's estimate of the burden of the collection of information; (c) ways to enhance the quality, utility, and clarity of the information to be collected; (d) ways to minimize the burden of the collection of information on respondents, including through the use of automated collection techniques or other forms of information technology; and (e) estimates of capital or start-up costs and costs of operation, maintenance, and purchase of services to provide information.

Dated: May 5, 2000.

William T. Earle,

Assistant Director (Management) CFO.

[FR Doc. 00–12011 Filed 5–11–00; 8:45 am]

BILLING CODE 4810–31–P

DEPARTMENT OF THE TREASURY

Bureau of Alcohol, Tobacco and Firearms

Proposed Collection; Comment Request

ACTION: Notice and request for comments.

SUMMARY: The Department of the Treasury, as part of its continuing effort to reduce paperwork and respondent burden, invites the general public and other Federal agencies to take this opportunity to comment on proposed and/or continuing information collections, as required by the Paperwork Reduction Act of 1995, Public Law 104–13 (44 U.S.C. 3506(c)(2)(A)). Currently, the Bureau of Alcohol, Tobacco and Firearms within the Department of the Treasury is soliciting comments concerning the Supporting Data For Nonbeverage Drawback Claims.

DATES: Written comments should be received on or before July 11, 2000 to be assured of consideration.

ADDRESSES: Direct all written comments to Bureau of Alcohol, Tobacco and Firearms, Linda Barnes, 650 Massachusetts Avenue, NW., Washington, DC 20226, (202) 927–8930.

FOR FURTHER INFORMATION CONTACT: Requests for additional information or copies of the form(s) and instructions should be directed to Steve Simon, Regulations Division, 650 Massachusetts Avenue, NW., Washington, DC 20226, (202) 927–8210.

SUPPLEMENTARY INFORMATION:

Title: Supporting Data For Nonbeverage Drawback Claims

OMB Number: 1512–0514.

Form Number: ATF F 5154.2.

Abstract: The form substantiates nonbeverage drawback claims by showing the use of taxpaid distilled spirtis to manufacture nonbeverage products. The form is used in ATF district offices which verify that all distilled spirits can be accounted for and that drawback is paid only in the amount and for the purposes authorized by law.

Current Actions: There are no changes to this information collection and it is being submitted for extension purposes.

Type of Review: Extension.

Affected Public: Business or other for-profit.

Estimated Number of Respondents: 590.

Estimated Time Per Respondent: 1 hour.

Estimated Total Annual Burden Hours: 3,540.

Request for Comments

Comments submitted in response to this notice will be summarized and/or included in the request for OMB approval. All comments will become a matter of public record. Comments are invited on: (a) Whether the collection of information is necessary for the proper performance of the functions of the agency, including whether the information shall have practical utility; (b) the accuracy of the agency's estimate of the burden of the collection of information; (c) ways to enhance the quality, utility, and clarity of the information to be collected; (d) ways to minimize the burden of the collection of information on respondents, including through the use of automated collection techniques or other forms of information technology; and (e) estimates of capital or start-up costs and costs of operation, maintenance, and purchase of services to provide information.

Dated: May 5, 2000.

William T. Earle,

Assistant Director (Management) CFO.

[FR Doc. 00–12012 Filed 5–11–00; 8:45 am]

BILLING CODE 4810–31–P

DEPARTMENT OF THE TREASURY

Bureau of Alcohol, Tobacco and Firearms

Proposed Collection; Comment Request

ACTION: Notice and request for comments.

SUMMARY: The Department of the Treasury, as part of its continuing effort to reduce paperwork and respondent burden, invites the general public and other Federal agencies to take this opportunity to comment on proposed and/or continuing information collections, as required by the Paperwork Reduction Act of 1995, Public Law 104–13 (44 U.S.C. 3506(c)(2)(A)). Currently, the Bureau of Alcohol, Tobacco and Firearms within the Department of the Treasury is soliciting comments concerning the Application For Extension of Time For Payment of Tax.

DATES: Written comments should be received on or before July 11, 2000 to be assured of consideration.

ADDRESSES: Direct all written comments to Bureau of Alcohol, Tobacco and Firearms, Linda Barnes, 650 Massachusetts Avenue, NW., Washington, DC 20226, (202) 927–8930.

FOR FURTHER INFORMATION CONTACT: Requests for additional information or copies of the form(s) and instructions should be directed to Thomas Stewart, Chief, Revenue Operations Branch, 650 Massachusetts Avenue, NW., Washington, DC 20226, (202) 927–8200.

SUPPLEMENTARY INFORMATION:

Title: Application For Extension of Time For Payment of Tax.

OMB Number: 1512–0506.

Form Number: ATF F 5600.38.

Abstract: ATF uses this information to determine if a taxpayer is qualified to extend payment of tax based on circumstances beyond the taxpayer's control. The record retention requirement for this information collection is 3 years.

Current Actions: There are no changes to this information collection and it is being submitted for extension purposes only.

Type of Review: Extension.

Affected Public: Business or other for-profit.

Estimated Number of Respondents: 12.

Estimated Time Per Respondent: 15 minutes.

Estimated Total Annual Burden Hours: 3.

Request for Comments

Comments submitted in response to this notice will be summarized and/or included in the request for OMB approval. All comments will become a matter of public record. Comments are invited on: (a) Whether the collection of information is necessary for the proper performance of the functions of the agency, including whether the information shall have practical utility; (b) the accuracy of the agency's estimate of the burden of the collection of information; (c) ways to enhance the quality, utility, and clarity of the information to be collected; (d) ways to minimize the burden of the collection of information on respondents, including through the use of automated collection techniques or other forms of information technology; and (e) estimates of capital or start-up costs and costs of operation, maintenance, and purchase of services to provide information.

Dated: May 5, 2000.

William T. Earle,

Assistant Director (Management) CFO.

[FR Doc. 00–12013 Filed 5–11–00; 8:45 am]

BILLING CODE 4810–31–P

DEPARTMENT OF THE TREASURY

Internal Revenue Service

Proposed Collection; Comment Request for Forms 6466 and 6467

AGENCY: Internal Revenue Service (IRS), Treasury.

ACTION: Notice and request for comments.

SUMMARY: The Department of the Treasury, as part of its continuing effort to reduce paperwork and respondent burden, invites the general public and other Federal agencies to take this opportunity to comment on proposed and/or continuing information collections, as required by the Paperwork Reduction Act of 1995, Public Law 104–13 (44 U.S.C. 3506(c)(2)(A)). Currently, the IRS is soliciting comments concerning Form 6466, Transmittal of Forms W–4 Reported Magnetically/Electronically, and Form 6467, Transmittal of Forms W–4 Reported Magnetically/Electronically (Continuation).

DATES: Written comments should be received on or before July 11, 2000 to be assured of consideration.

ADDRESSES: Direct all written comments to Garrick R. Shear, Internal Revenue Service, room 5244, 1111 Constitution Avenue NW., Washington, DC 20224.

FOR FURTHER INFORMATION CONTACT: Requests for additional information or copies of the forms and instructions should be directed to Carol Savage, (202) 622–3945, Internal Revenue Service, room 5242, 1111 Constitution Avenue NW., Washington, DC 20224.

SUPPLEMENTARY INFORMATION:

Title: Form 6466, Transmittal of Forms W–4 Reported Magnetically/Electronically, and Form 6467, Transmittal of Forms W–4 Reported Magnetically/Electronically (Continuation).

OMB Number: 1545–0314.

Form Number: Forms 6466 and 6467.

Abstract: Under regulation section 31.3402(f)(2)–1(g), employers are required to submit certain withholding certificates (Form W–4) to the Internal Revenue Service. Transmittal Form 6466 and the continuation sheet Form 6467 are submitted by an employer, or an authorized agent of the employer, who will be reporting submissions of Form W–4 on magnetic/electronic media.

Current Actions: A new section, Employer's Media Number, was added to Form 6466 and Form 6467 to help identify specific pieces of media. Some filers submit more than one tape or diskette. By identifying their media number, IRS can better match paperwork to media and expedite processing.

Type of Review: Revision of a currently approved collection.

Affected Public: Business or other for-profit organizations, not-for-profit institutions, farms and Federal, state, local or tribal governments.

Estimated Number of Respondents: 100.

Estimated Time Per Respondent: 1 hour, 20 minutes.

Estimated Total Annual Burden Hours: 133.

The following paragraph applies to all of the collections of information covered by this notice:

An agency may not conduct or sponsor, and a person is not required to respond to, a collection of information unless the collection of information displays a valid OMB control number. Books or records relating to a collection of information must be retained as long as their contents may become material in the administration of any internal revenue law. Generally, tax returns and tax return information are confidential, as required by 26 U.S.C. 6103.

Request for Comments

Comments submitted in response to this notice will be summarized and/or included in the request for OMB

approval. All comments will become a matter of public record.

Comments are invited on: (a) Whether the collection of information is necessary for the proper performance of the functions of the agency, including whether the information shall have practical utility; (b) the accuracy of the agency's estimate of the burden of the collection of information; (c) ways to enhance the quality, utility, and clarity of the information to be collected; (d) ways to minimize the burden of the collection of information on respondents, including through the use of automated collection techniques or other forms of information technology; and (e) estimates of capital or start-up costs and costs of operation, maintenance, and purchase of services to provide information.

Approved: May 4, 2000.

Garrick R. Shear,

IRS Reports Clearance Officer.

[FR Doc. 00–11903 Filed 5–11–00; 8:45 am]

BILLING CODE 4830–01–P

DEPARTMENT OF THE TREASURY

Internal Revenue Service

Proposed Collection; Comment Request for Notice 1027

AGENCY: Internal Revenue Service (IRS), Treasury.

ACTION: Notice and request for comments.

SUMMARY: The Department of the Treasury, as part of its continuing effort to reduce paperwork and respondent burden, invites the general public and other Federal agencies to take this opportunity to comment on proposed and/or continuing information collections, as required by the Paperwork Reduction Act of 1995, Public Law 104–13 (44 U.S.C. 3506(c)(2)(A)). Currently, the IRS is soliciting comments concerning Notice 1027, How to Prepare Media Label for Form W–4.

DATES: Written comments should be received on or before July 11, 2000 to be assured of consideration.

ADDRESSES: Direct all written comments to Garrick R. Shear, Internal Revenue Service, room 5244, 1111 Constitution Avenue NW., Washington, DC 20224.

FOR FURTHER INFORMATION CONTACT: Requests for additional information or copies of the notice should be directed to Carol Savage, (202) 622–3945, Internal Revenue Service, room 5242, 1111 Constitution Avenue NW., Washington, DC 20224.

SUPPLEMENTARY INFORMATION:

Title: How to Prepare Media Label for Form W–4.

OMB Number: 1545–0410.

Notice Number: Notice 1027.

Abstract: Internal Revenue Code section 3402 requires all employers making payment of wages to withhold tax on such payments. Employers are further required under regulation section 31.3402(f)(2)–1(g) to submit certain withholding certificates (Form W–4) to the Internal Revenue Service. Notice 1027 is sent to employers who prefer to file this information on magnetic tape.

Current Actions: There are no changes being made to the notice at this time.

Type of Review: Extension of a currently approved collection.

Affected Public: Business or other for-profit organizations, not-for-profit institutions, farms, and Federal, state, local or tribal governments.

Estimated Number of Responses: 400.

Estimated Time Per Respondent: 5 minutes.

Estimated Total Annual Burden Hours: 33.

The following paragraph applies to all of the collections of information covered by this notice:

An agency may not conduct or sponsor, and a person is not required to respond to, a collection of information unless the collection of information displays a valid OMB control number. Books or records relating to a collection of information must be retained as long as their contents may become material in the administration of any internal revenue law. Generally, tax returns and tax return information are confidential, as required by 26 U.S.C. 6103.

Request for Comments

Comments submitted in response to this notice will be summarized and/or included in the request for OMB approval. All comments will become a matter of public record.

Comments are invited on: (a) Whether the collection of information is necessary for the proper performance of the functions of the agency, including whether the information shall have practical utility; (b) the accuracy of the agency's estimate of the burden of the collection of information; (c) ways to enhance the quality, utility, and clarity of the information to be collected; (d) ways to minimize the burden of the collection of information on respondents, including through the use of automated collection techniques or other forms of information technology; and (e) estimates of capital or start-up costs and costs of operation, maintenance, and purchase of services to provide information.

Approved: May 4, 2000.

Garrick R. Shear,

IRS Reports Clearance Officer.

[FR Doc. 00–11904 Filed 5–11–00; 8:45 am]

BILLING CODE 4830–01–P

DEPARTMENT OF THE TREASURY

Internal Revenue Service

Proposed Collection; Comment Request for Revenue Procedure 97–29

AGENCY: Internal Revenue Service (IRS), Treasury.

ACTION: Notice and request for comments.

SUMMARY: The Department of the Treasury, as part of its continuing effort to reduce paperwork and respondent burden, invites the general public and other Federal agencies to take this opportunity to comment on proposed and/or continuing information collections, as required by the Paperwork Reduction Act of 1995, Public Law 104–13 (44 U.S.C. 3506(c)(2)(A)). Currently, the IRS is soliciting comments concerning Revenue Procedure 97–29, Model Amendments and Prototype Program for SIMPLE IRAs.

DATES: Written comments should be received on or before July 11, 2000, to be assured of consideration.

ADDRESSES: Direct all written comments to Garrick R. Shear, Internal Revenue Service, room 5244, 1111 Constitution Avenue NW., Washington, DC 20224.

FOR FURTHER INFORMATION CONTACT: Requests for additional information or copies of the revenue procedure should be directed to Carol Savage, (202) 622–3945, Internal Revenue Service, room 5242, 1111 Constitution Avenue NW., Washington, DC 20224.

SUPPLEMENTARY INFORMATION:

Title: Model Amendments and Prototype Program for SIMPLE IRAs.

OMB Number: 1545–1543.

Revenue Procedure Number: Revenue Procedure 97–29.

Abstract: Revenue Procedure 97–29 provides guidance to drafters of prototype SIMPLE IRAs on obtaining opinion letters and provides permissive amendments to sponsors of nonSIMPLE IRAs.

Current Actions: There are no changes being made to the revenue procedure at this time.

Type of Review: Extension of a currently approved collection.

Affected Public: Business or other for-profit organizations, and not-for-profit institutions.

Estimated Number of Respondents: 3,205.

Estimated Time Per Respondent: 8 hours, 4 minutes.

Estimated Total Annual Burden Hours: 25,870.

The following paragraph applies to all of the collections of information covered by this notice:

An agency may not conduct or sponsor, and a person is not required to respond to, a collection of information unless the collection of information displays a valid OMB control number. Books or records relating to a collection of information must be retained as long as their contents may become material in the administration of any internal revenue law. Generally, tax returns and tax return information are confidential, as required by 26 U.S.C. 6103.

Request for Comments

Comments submitted in response to this notice will be summarized and/or included in the request for OMB approval. All comments will become a matter of public record. Comments are invited on: (a) Whether the collection of information is necessary for the proper performance of the functions of the agency, including whether the information shall have practical utility; (b) the accuracy of the agency's estimate of the burden of the collection of information; (c) ways to enhance the quality, utility, and clarity of the information to be collected; (d) ways to minimize the burden of the collection of information on respondents, including through the use of automated collection techniques or other forms of information technology; and (e) estimates of capital or start-up costs and costs of operation, maintenance, and purchase of services to provide information.

Approved: May 4, 2000.

Garrick R. Shear,

IRS Reports Clearance Officer.

[FR Doc. 00–11905 Filed 5–11–00; 8:45 am]

BILLING CODE 4830–01–U

DEPARTMENT OF THE TREASURY

Internal Revenue Service

Proposed Collection; Comment Request for Form 6252

AGENCY: Internal Revenue Service (IRS), Treasury.

ACTION: Notice and request for comments.

SUMMARY: The Department of the Treasury, as part of its continuing effort to reduce paperwork and respondent burden, invites the general public and other Federal agencies to take this opportunity to comment on proposed and/or continuing information collections, as required by the Paperwork Reduction Act of 1995, Public Law 104–13 (44 U.S.C. 3506(c)(2)(A)). Currently, the IRS is soliciting comments concerning Form 6252, Installment Sale Income.

DATES: Written comments should be received on or before July 11, 2000 to be assured of consideration.

ADDRESSES: Direct all written comments to Garrick R. Shear, Internal Revenue Service, room 5244, 1111 Constitution Avenue NW., Washington, DC 20224.

FOR FURTHER INFORMATION CONTACT: Requests for additional information or copies of the form and instructions should be directed to Larnice Mack, (202) 622–3179, Internal Revenue Service, room 5244, 1111 Constitution Avenue NW., Washington, DC 20224.

SUPPLEMENTARY INFORMATION:

Title: Installment Sale Income.

OMB Number: 1545–0228.

Form Number: 6252.

Abstract: Internal Revenue Code section 453 provides that if real or personal property is disposed of at a gain and at least one payment is to be received in a tax year after the year of sale, the income is to be reported in installments, as payment is received. Form 6252 provides for the computation of income to be reported in the year of sale and in years after the year of sale. It also provides for the computation of installment sales between certain related parties required by Code section 453(e).

Current Actions: There are no changes being made to the form at this time.

Type of Review: Extension of a currently approved collection.

Affected Public: Business of other for-profit organizations, individuals or households, and farms.

Estimated Number of Respondents: 782,848

Estimated Time Per Respondent: 3 hr., 22 min.

Estimated Total Annual Burden Hours: 2,630,369

The following paragraph applies to all of the collections of information covered by this notice:

An agency may not conduct or sponsor, and a person is not required to respond to, a collection of information unless the collection of information displays a valid OMB control number. Books or records relating to a collection of information must be retained as long as their contents may become material in the administration of any internal revenue law. Generally, tax returns and tax return information are confidential, as required by 26 U.S.C. 6103.

Request for Comments

Comments submitted in response to this notice will be summarized and/or included in the request for OMB approval. All comments will become a matter of public record. Comments are invited on: (a) Whether the collection of information is necessary for the proper performance of the functions of the agency, including whether the information shall have practical utility; (b) the accuracy of the agency's estimate of the burden of the collection of information; (c) ways to enhance the quality, utility, and clarity of the information to be collected; (d) ways to minimize the burden of the collection of information on respondents, including through the use of automated collection techniques or other forms of information technology; and (e) estimates of capital or start-up costs and costs of operation, maintenance, and purchase of services to provide information.

Approved: May 4, 2000.

Garrick R. Shear,

IRS Reports Clearance Officer.

[FR Doc. 00–11906 Filed 5–11–00; 8:45 am]

BILLING CODE 4830–01–P

DEPARTMENT OF THE TREASURY

Internal Revenue Service

Proposed Collection; Comment Request for Form 1040EZ

AGENCY: Internal Revenue Service (IRS), Treasury.

ACTION: Notice and request for comments.

SUMMARY: The Department of the Treasury, as part of its continuing effort to reduce paperwork and respondent burden, invites the general public and other Federal agencies to take this opportunity to comment on proposed and/or continuing information collections, as required by the Paperwork Reduction Act of 1995, Public Law 104–13(44 U.S.C. 3506(c)(2)(A)). Currently, the IRS is soliciting comments concerning Form 1040EZ, Income Tax Return for Single and Joint Filers With No Dependents.

DATES: Written comments should be received on or before July 11, 2000 to be assured of consideration.

ADDRESSES: Direct all written comments to Garrick R. Shear, Internal Revenue

Service, room 5244, 1111 Constitution Avenue NW., Washington, DC 20224.

FOR FURTHER INFORMATION CONTACT: Requests for additional information or copies of the form and instructions should be directed to Faye Bruce, (202) 622–6665, Internal Revenue Service, room 5244, 1111 Constitution Avenue NW., Washington, DC 20224.

SUPPLEMENTARY INFORMATION:

Title: Income Tax Return for Single and Joint Filers With No Dependents.

OMB Number: 1545–0675.

Form Number: 1040EZ

Abstract: This form is used by certain individuals to report their income subject to income tax and to figure their correct tax liability. The data are used by the IRS to verify that the items reported on the form are correct and are also for general statistical use.

Current Actions: There are no changes being made to the form at this time.

Type of Review: Extension of a currently approved collection.

Affected Public: Individuals or households.

Estimated Number of Respondents: 15,159,869.

Estimated Time Per Response: 3 hr., 48 min.

Estimated Total Annual Burden Hours: 42,418,697

The following paragraph applies to all of the collections of information covered by this notice:

An agency may not conduct or sponsor, and a person is not required to respond to, a collection of information unless the collection of information displays a valid OMB control number. Books or records relating to a collection of information must be retained as long as their contents may become material in the administration of any internal revenue law. Generally, tax returns and tax return information are confidential, as required by 26 U.S.C. 6103.

Request for Comments

Comments submitted in response to this notice will be summarized and/or included in the request for OMB approval. All comments will become a matter of public record. Comments are invited on: (a) Whether the collection of information is necessary for the proper performance of the functions of the agency, including whether the information shall have practical utility; (b) the accuracy of the agency's estimate of the burden of the collection of information; (c) ways to enhance the quality, utility, and clarity of the information to be collected; (d) ways to minimize the burden of the collection of information on respondents, including through the use of automated collection techniques or other forms of information technology; and (e) estimates of capital or start-up costs and costs of operation, maintenance, and purchase of services to provide information.

Approved: May 3, 2000.

Garrick R. Shear,

IRS Reports Clearance Officer.

[FR Doc. 00–11907 Filed 5–11–00; 8:45 am]

BILLING CODE 4830–01–P

DEPARTMENT OF THE TREASURY

Internal Revenue Service

Proposed Collection; Comment Request for Form 2438.

AGENCY: Internal Revenue Service (IRS), Treasury.

ACTION: Notice and request for comments.

SUMMARY: The Department of the Treasury, as part of its continuing effort to reduce paperwork and respondent burden, invites the general public and other Federal agencies to take this opportunity to comment on proposed and/or continuing information collections, as required by the Paperwork Reduction Act of 1995, Public Law 104–13 (44 U.S.C. 3506(c)(2)(A)). Currently, the IRS is soliciting comments concerning Form 2438, Undistributed Capital Gains Tax Return.

DATES: Written comments should be received on or before July 11, 2000, to be assured of consideration.

ADDRESSES: Direct all written comments to Garrick R. Shear, Internal Revenue Service, room 5244, 1111 Constitution Avenue NW., Washington, DC 20224.

FOR FURTHER INFORMATION CONTACT: Requests for additional information or copies of the form and instructions should be directed to Faye Bruce, (202) 622–6665, Internal Revenue Service, room 5244, 1111 Constitution Avenue NW., Washington, DC 20224.

SUPPLEMENTARY INFORMATION:

Title: Undistributed Capital Gains Tax Return.

OMB Number: 1545–0144.

Form Number: 2438.

Abstract: Form 2438 is used by regulated investment companies to compute capital gains tax on undistributed capital gains designated under Internal Revenue Code section 852(b)(3)(D). The IRS uses this information to determine the correct tax.

Current Actions: There are no changes being made to the form at this time.

Type of Review: Extension of a currently approved collection.

Affected Public: Business or other for-profit organizations.

Estimated Number of Respondents: 100.

Estimated Time Per Respondent: 8 hrs., 59 mins.

Estimated Total Annual Burden Hours: 899.

The following paragraph applies to all of the collections of information covered by this notice:

An agency may not conduct or sponsor, and a person is not required to respond to, a collection of information unless the collection of information displays a valid OMB control number. Books or records relating to a collection of information must be retained as long as their contents may become material in the administration of any internal revenue law. Generally, tax returns and tax return information are confidential, as required by 26 U.S.C. 6103.

Request for Comments

Comments submitted in response to this notice will be summarized and/or included in the request for OMB approval. All comments will become a matter of public record. Comments are invited on: (a) Whether the collection of information is necessary for the proper performance of the functions of the agency, including whether the information shall have practical utility; (b) the accuracy of the agency's estimate of the burden of the collection of information; (c) ways to enhance the quality, utility, and clarity of the information to be collected; (d) ways to minimize the burden of the collection of information on respondents, including through the use of automated collection techniques or other forms of information technology; and (e) estimates of capital or start-up costs and costs of operation, maintenance, and purchase of services to provide information.

Approved: May 3, 2000.

Garrick R. Shear,

IRS Reports Clearance Officer.

[FR Doc. 00–11908 Filed 5–11–00; 8:45 am]

BILLING CODE 4830–01–U

DEPARTMENT OF THE TREASURY

Internal Revenue Service

[LR–185–84]

Proposed Collection; Comment Request for Regulation Project

AGENCY: Internal Revenue Service (IRS), Treasury.

ACTION: Notice and request for comments.

SUMMARY: The Department of the Treasury, as part of its continuing effort to reduce paperwork and respondent burden, invites the general public and other Federal agencies to take this opportunity to comment on proposed and/or continuing information collections, as required by the Paperwork Reduction Act of 1995, Public Law 104–13 (44 U.S.C. 3506(c)(2)(A)). Currently, the IRS is soliciting comments concerning an existing final regulation, LR–185–84 (TD 8086), Election of $10 Million Limitation on Exempt Small Issues of Industrial Development Bonds; Supplemental Capital Expenditure Statements (§ 1.103–10(b)(2)(vi)).

DATES: Written comments should be received on or before July 11, 2000 to be assured of consideration.

ADDRESSES: Direct all written comments to Garrick R. Shear, Internal Revenue Service, room 5244, 1111 Constitution Avenue NW., Washington, DC 20224.

FOR FURTHER INFORMATION CONTACT: Requests for additional information or copies of the information collection should be directed to Faye Bruce, (202) 622–6665, Internal Revenue Service, room 5244, 1111 Constitution Avenue NW., Washington, DC 20224.

SUPPLEMENTARY INFORMATION:

Title: Election of $10 Million Limitation on Exempt Small Issues of Industrial Development Bonds; Supplemental Capital Expenditure Statements.

OMB Number: 1545–0940.

Regulation Project Number: LR–185–84.

Abstract: This regulation liberalizes the procedure by which a state or local government issuer of an exempt small issue of tax-exempt bonds elects the $10 million limitation upon the size of such issue and deletes the requirement to file certain supplemental capital expenditure statements.

Current Actions: There is no change to this existing regulation.

Type of Review: Extension of a currently approved collection.

Affected Public: State, local or tribal governments.

Estimated Number of Respondents: 10,000.

Estimated Time Per Respondent: 6 minutes.

Estimated Total Annual Burden Hours: 1,000.

The following paragraph applies to all of the collections of information covered by this notice:

An agency may not conduct or sponsor, and a person is not required to respond to, a collection of information unless the collection of information displays a valid OMB control number. Books or records relating to a collection of information must be retained as long as their contents may become material in the administration of any internal revenue law. Generally, tax returns and tax return information are confidential, as required by 26 U.S.C. 6103.

Request for Comments

Comments submitted in response to this notice will be summarized and/or included in the request for OMB approval. All comments will become a matter of public record. Comments are invited on: (a) Whether the collection of information is necessary for the proper performance of the functions of the agency, including whether the information shall have practical utility; (b) the accuracy of the agency's estimate of the burden of the collection of information; (c) ways to enhance the quality, utility, and clarity of the information to be collected; (d) ways to minimize the burden of the collection of information on respondents, including through the use of automated collection techniques or other forms of information technology; and (e) estimates of capital or start-up costs and costs of operation, maintenance, and purchase of services to provide information.

Approved: May 3, 2000.

Garrick R. Shear,

IRS Reports Clearance Officer.

[FR Doc. 00–11909 Filed 5–11–00; 8:45 am]

BILLING CODE 4830–01–P

Corrections

Federal Register

Vol. 65, No. 93

Friday, May 12, 2000

This section of the FEDERAL REGISTER contains editorial corrections of previously published Presidential, Rule, Proposed Rule, and Notice documents. These corrections are prepared by the Office of the Federal Register. Agency prepared corrections are issued as signed documents and appear in the appropriate document categories elsewhere in the issue.

DEPARTMENT OF THE INTERIOR

Fish and Wildlife Service

Notice of Intent to Prepare a Comprehensive Conservation Plan for St. Marks National Wildlife Refuge in Wakulla, Jefferson, and Taylor Counties, Florida

Correction

In notice document 00–10683, beginning on page 24976, in the issue of Friday, April 28, 2000, make the following correction:

On page 24976, in the third column, under the heading **ADDRESSES**, in the sixth line, ''32372'' should read ''32327''.

[FR Doc. C0–10683 Filed 5–11–00; 8:45 am]

BILLING CODE 1505–01–D

DEPARTMENT OF TRANSPORTATION

Federal Aviation Administration

14 CFR Part 71

[Airspace Docket No. 00-AGL-15]

Proposed Modification of Class D Airspace; Chicago, Aurora Municipal Airport, IL; and Modification of Class E Airspace; Chicago, Aurora Municipal Airport, IL

Correction

In proposed rule document 00–10913 beginning on page 25455 in the issue of Tuesday, May 2, 2000, make the following correction:

§71.1 [Corrected]

On page 25456, in the first column, in §71.1, under **AGL IL D Chicago, Aurora Municipal Airport, IL [Revised]**, in the second line, ''(Lat. 41° 46′ 19″N., long. 88° 29′ 32′W.'' should read ''(Lat. 41° 46′ 19″N., long. 88° 28′ 32″W.''

[FR Doc. C0–10913 Filed 5–11–00; 8:45 am]

BILLING CODE 1505–01–D

DEPARTMENT OF TRANSPORTATION

Federal Aviation Administration

14 CFR Part 71

Proposed Establishment of Class E Airspace; Minneapolis, Flying Cloud Airport, MN

Correction

In proposed rule document 00–8969 beginning on page 19700 in the issue of Wednesday, April 12, 2000, make the following correction:

§71.1 [Corrected]

On page 19701, in the first column, in §71.1, in ''**AGL MN E2 Minneapolis, Flying Cloud Airport, NM [New]**'', ''**NM [New]**'' should read ''**MN [New]**''.

[FR Doc. C0–8969 Filed 5–11–00; 8:45 am]

BILLING CODE 1505–01–D

Federal Register

Friday,
May 12, 2000

Part II

Department of Transportation

National Highway Traffic Safety Administration

49 CFR Part 552 et al.

Federal Motor Vehicle Safety Standards; Occupant Crash Protection; Final Rule

DEPARTMENT OF TRANSPORTATION

National Highway Traffic Safety Administration

49 CFR Parts 552, 571, 585 and 595

[Docket No. NHTSA 00–7013; Notice 1]

RIN 2127–AG70

Federal Motor Vehicle Safety Standards; Occupant Crash Protection

AGENCY: National Highway Traffic Safety Administration (NHTSA), DOT.

ACTION: Final rule; interim final rule.

SUMMARY: This rule amends our occupant crash protection standard to require that future air bags be designed to create less risk of serious air bag-induced injuries than current air bags, particularly for small women and young children; and provide improved frontal crash protection for all occupants, by means that include advanced air bag technology. To achieve these goals, it adds a wide variety of new requirements, test procedures, and injury criteria, using an assortment of new dummies. It replaces the sled test with a rigid barrier crash test for assessing the protection of unbelted occupants.

The issuance of this rule completes the implementation of our 1996 comprehensive plan for reducing air bag risks. It is also required by the Transportation Equity Act for the 21st Century (TEA 21), which was enacted in 1998.

This rule will ensure that advanced air bag technologies are installed across the full spectrum of future fleets of motor vehicles. As a result, the air bags in those vehicles will be even more effective than the current redesigned air bags in saving lives. At the same time, those air bags will be much less likely than those redesigned air bags to cause deaths or serious injuries.

The provisions of this rule, particularly the maximum test speed for the unbelted rigid barrier test, reflect the uncertainty associated with simultaneously achieving the twin goals of TEA 21. This uncertainty leads us to take an approach that best assures improved air bag protection for occupants of all sizes, without compromising efforts to reduce the risks of injury to vulnerable occupants, including children and short women seated very close to air bags and out-of-position occupants. Such an approach is one that involves the least uncertainty for the occupants who have been most at risk. As long as the manufacturers improve the already substantial overall level of real world protection provided by current redesigned air bags, the uncertainty associated with the challenge of simultaneously achieving the twin goals of TEA 21 is best resolved at this point in favor of minimizing risk. This is especially true in the early stages of the introduction of advanced air bag technologies.

In light of that uncertainty, we are selecting the lower of two proposed speeds as the maximum test speed for the unbelted rigid barrier crash test and issuing that part of this rule as an interim final rule. To resolve that uncertainty, we are planning a multi-year effort to obtain additional data. We will issue a final decision regarding the maximum test speed after giving notice and seeking public comment. If we were to increase the speed, we would provide leadtime commensurate with the extent of that increase.

DATES: *Effective Date:* The amendments made in this rule are effective June 12, 2000.

The incorporation by reference of the publications listed in the rule is approved by the Director of the Federal Register as of June 12, 2000.

Petitions: Petitions for reconsideration must be received by June 26, 2000.

ADDRESSES: Petitions for reconsideration should refer to the docket and notice number of this document and be submitted to: Administrator, National Highway Traffic Safety Administration, 400 Seventh Street, SW, Washington, DC 20590.

In light of our decision to issue the maximum test speed for the unbelted rigid barrier test as an interim final rule, we are keeping the docket for this document open to receive public input. Persons making submissions to the docket should refer to the docket and notice number of this document. As we obtain and analyze data, we will place the results in that docket.

FOR FURTHER INFORMATION CONTACT: For non-legal issues, you may contact Clarke Harper, Chief, Light Duty Vehicle Division, NPS–11. Telephone: (202) 366–2264. Fax: (202) 366–4329. E-mail: Charper@NHTSA.dot.gov.

For legal issues, you may contact Edward Glancy or Rebecca MacPherson, Office of Chief Counsel, NCC–20. Telephone: (202) 366–2992. Fax: (202) 366–3820.

You may send mail to these officials at the National Highway Traffic Safety Administration, 400 Seventh St., S.W., Washington, D.C., 20590.

SUPPLEMENTARY INFORMATION: *For information about air bags and related rulemakings:* Visit the home page of the NHTSA web site at http://www.nhtsa.dot.gov and select ''Air Bags'' under ''Popular Information'' on the left hand side of the screen. On the next screen, select ''Advanced Air Bags.''

You may also view the materials in the docket for this rulemaking on the Internet. To do this, do the following:

(1) Go to the Docket Management System (DMS) Web page of the Department of Transportation (http://dms.dot.gov/).

(2) On that page, click on ''search.''

(3) On the next page (http://dms.dot.gov/search/), type in the four-digit docket number shown at the beginning of this document. Example: The docket number for the Supplemental Proposal in this rulemaking is ''NHTSA 99–6407.'' If you want to view the materials filed for that notice, you would type ''6407.'' (For this rule, you would type ''7013.'') After typing the docket number, click on ''search.''

(4) On the next page, which contains docket summary information for the docket you selected, click on the desired comments. You may download the comments and other materials.

Note to readers: As an aid to readers who are outside the engineering community, we have provided a glossary that briefly explains the key technical terms used in this preamble. In the case of the term, ''fixed barrier crash test,'' we have supplemented the explanation with illustrations. That glossary appears in Appendix A at the end of the preamble, before the regulatory text. Readers may find it helpful to review that glossary before reading the rest of this document.

Table of Contents

I. Safety Problems
- A. Frontal Crashes and the ''Second Collision''—The Leading Cause of Occupant Deaths
- B. Preventing or Mitigating the Effects of the Second Collision Using Seat Belts and Air Bags
- C. Air Bag Risks and Fatalities
- D. Causes of Air Bag Fatalities

II. The Rule, Its Rationale, and Its Implementation
- A. Key Provisions of the Rule
- B. Other Provisions of the Rule
- C. Future Rulemaking Plans
- D. Monitoring of Implementation and Field Experience; Research and Technology Assessment

III. Our Proposals for Advanced Air Bags
- A. Our Initial Proposal (September 1998)
- B. Our Supplemental Proposal (November 1999)

IV. Public Comments on the Supplemental Proposal

V. Diagrams of the Rule Requirements

VI. Improving the Protection of Unbelted Occupants in Serious Crashes
- A. Summary of Proposed Requirements
- B. Type of Test

C. Agency Decision to Establish Maximum Test Speed at 40 km/h (25 mph)
1. The Supplemental Proposal
2. Summary of Comments
3. Decision on Maximum Test Speed
D. Other Issues
1. Location of 5th Percentile Adult Female Dummy
2. Minimum Test Speed
VII. Improving the Protection of Belted Occupants in Serious Crashes
A. Belted Rigid Barrier Crash Test
B. Belted Offset Deformable Barrier Crash Test
VIII. Minimizing the Risk of Injuries and Deaths Caused by Air Bags
A. Safety of Infants
1. Option 1: Feature (*e.g.,* Weight or Size Sensor) That Suppresses the Air Bag When an Infant Is Present
2. Option 2: Low-Risk Deployment for Infants in Rear-Facing Child Safety Seats
B. Safety of Young Children
1. Option 1: Feature (*e.g.,* Weight or Size Sensor) That Suppresses the Air Bag When a Child Is Present
2. Option 2: Low-Risk Deployment for Young Children
3. Option 3: Feature That Suppresses the Air Bag When a Child Is Out-of-Position
C. Safety of Teenage and Adult Drivers
1. Option 1: Low-Risk Deployment for Drivers
2. Option 2: Feature That Suppresses the Air Bag When a Driver Is Out-of-Position
IX. Injury Criteria
A. Head Injury Criteria
B. Neck Injury Criteria
C. Thoracic Criteria
D. Other Criteria
X. Lead Time and Effective Date
A. Large Manufacturers
B. Limited Line, Small, Multi-Stage Manufacturers and Alterers
1. Limited Line Manufacturers
2. Small Manufacturers
3. Multi-Stage Manufacturers and Alterers
XI. Availability of Original Equipment and Retrofit Manual On-Off Switches
XII. Warning Labels, Consumer Information, and Telltale Devices
A. Warning Labels and Consumer Information
B. Telltale Devices
XIII. Miscellaneous Issues
A. Child Restraints Used for Testing Suppression and Low-Risk Deployment Features
B. Dummy Positioning for Static Suppression and Low-Risk Deployment Tests
C. Due Care Provision
D. Selection of Compliance Options
E. Credits for Early Compliance
F. Choice Between Complying with Existing and/or New Injury Criteria and Test Requirements
G. Time Periods for Measuring Injury Criteria During Tests
H. Cruise Controls
I. Rescue Operations
J. Hybrid III Dummy Neck
K. Seating Procedure for 5th Percentile Adult Female Dummy
L. Deletion of Tests Between the Initial and the Supplemental Proposals
M. Consideration of Unintended Consequences
N. Reporting Requirements
O. Use of Children and Adults for Testing Static Suppression Systems
P. Small Business Concerns
Q. Other Issues
1. Ability to Comment Effectively on the Supplemental Proposal
2. Resubmittal of Petition for Rulemaking by Donald Friedman and Carl Nash
XIV. Benefits and Costs
XV. Rulemaking Analyses and Notices
Appendix A Glossary
Appendix B Evolution of the Air Bag Provisions in Standard No. 208
Appendix C Chronology of DOT and NHTSA Responses to Air Bag Risks and Fatalities
Appendix D Installation of Advanced Technologies in Current Production Motor Vehicles
Regulatory Text

I. Safety Problems

A. Frontal Crashes and the "Second Collision"—The Leading Cause of Occupant Deaths

Frontal crashes are the most significant cause of motor vehicle fatalities. More than ⅔'s of the people killed in frontal crashes are unbelted. Young people, *i.e.,* those in their teens and twenties, account for about 40 percent of the unbelted deaths.

The frontal crash of a vehicle involves two collisions. The first collision occurs when the vehicle strikes another vehicle or an object such as a tree. The second collision is the human collision with the vehicle interior.

When a vehicle collides with an object, a front seat occupant who is not wearing a seat belt becomes a projectile and keeps moving forward at speeds up to the vehicle's pre-crash speed. If that unbelted occupant is not protected by an air bag, the head or chest of the occupant usually slams into the steering wheel, dashboard, roof pillars or windshield. In the absence of an air bag, even belted occupants, particularly belted drivers, are likely to strike the vehicle interior with their head and neck or chest in a serious crash.

B. Preventing or Mitigating the Effects of the Second Collision Using Seat Belts and Air Bags

To prevent or mitigate the effects of the second collision, Standard No. 208 requires that vehicles be equipped with seat belts and frontal air bags.[1] Seats belts are estimated to save 9,500 lives in America each year. Research has found that lap/shoulder belts, when used properly, reduce the risk of fatal injury to front seat passenger car occupants by 45 percent and the risk of moderate-to-critical injury by 50 percent. For light truck occupants, seat belts reduce the risk of fatal injury by 60 percent and moderate-to-critical injury by 65 percent.

Air bags are also highly effective in reducing fatalities from frontal crashes. Between 1986 and March 1, 2000, air bags have saved an estimated 5,303 front seat occupants (4,496 drivers (85 percent) and 807 right front passengers (15 percent)).[2] Of the 5,303 people, 72 percent were unbelted and 28 percent belted. If observed seat belt use rates were to increase to 85 percent, the goal for 2000 set by DOT in 1997, the distribution of lives saved would change from 72 percent unbelted/28 percent belted to 60 percent unbelted and 40 percent belted.

The number of lives saved annually by air bags is continuing to increase as the percentage of air bag-equipped vehicles on the road increases. We estimate that air bags will save more than 3,200 lives annually in passenger cars and light trucks when all light vehicles on the road are equipped with driver and passenger air bags. This estimate is based on an anticipated fleet of vehicles meeting all of the requirements in this rule and on 1997 seat belt use rates (66.9 percent, according to State-reported surveys). However, if observed seat belt use rates were to reach 85 percent, the annual savings of lives due to air bags would be reduced to approximately 2,400.

C. Air Bag Risks and Fatalities

As the numbers above indicate, the attempt through seat belts and air bags to substitute a survivable event for an unsurvivable one or to substitute a less injurious event for a more injurious one is not always successful. While air bags are saving an increasing number of people in moderate and high speed crashes, they have occasionally caused fatalities, especially to unrestrained, out-of-position children, in relatively low speed crashes. As of April 1, 2000, NHTSA's Special Crash Investigation (SCI) program had confirmed a total of 158 fatalities induced by the deployment of an air bag. Of that total, 92 were children, 60 were drivers, and 6 were adult passengers. An additional 38 fatalities were under investigation by SCI on that date, but they had not been confirmed as having been induced by air bags.

[1] For a history of NHTSA's rulemaking concerning air bags, see Appendix B, "Evolution of the Air Bag Provisions in Standard No. 208."

[2] These estimates are based on comparisons of the frequency of front seat occupant deaths in vehicles without air bags and in vehicles with air bags. These life savings occurred predominantly in moderate and high speed crashes; i.e., those with a velocity change (delta V) above 20 mph.

Changes have already occurred that are reducing the number of persons killed by air bags. Some changes are behavioral. As a result of public education programs, improved labeling and media coverage, the public is much more aware of the dangers air bags pose to children in the front seat and to drivers sitting too close to the air bag and is taking steps to reduce those dangers. For example, more children are being put in the back seat. More short-statured drivers are moving back from the steering wheel.

Other changes are technological. First, as NHTSA noted in its report, ''Air Bag Technology in Light Passenger Vehicles'' (December 1999), the air bag outputs (*i.e.,* pressure rise rate and the peak pressure) were reduced significantly in many MY 1998 and later motor vehicles in comparison to the earlier vehicles.[3] Hence, the sled test option successfully expedited the depowering of existing air bags. While there are many means by which air bag aggressiveness can be reduced, reducing air bag outputs is a quick means of accomplishing this goal. The agency's analyses also show that, between MY 1997 and MY 1998, 50 to 60 percent of the vehicles in the fleet covered by the 1997 IR lowered the output of the driver-side air bag, while about 40 to 50 percent of the vehicles in that fleet lowered the output for the passenger side. Comparison of the data for MY 1997 and MY 1998 vehicles shows that, on average, the pressure rise rate in MY 1998 vehicles decreased about 22 percent for the driver air bag and 14 percent for the passenger air bags.

The data provided by the manufacturers also show that they have made significant changes in the design of their air bag systems other than the air bag pressure rise rate and peak pressure in their air bag designs, some over a period of many years.[4] Thus, depowering is not the only technological option for reducing risk. One change is the recessing of driver air bags so that the module is located farther away from the plane of the steering wheel, and thus farther from the driver. Although this feature was not common in the early 1990s, it is found in almost half of the MY 1997 and MY 1998 vehicles in the responses to the 1997 IR. Similarly, the air bag mounting location on the passenger side has also shown significant changes. Other features, such as cover tear patterns, tear pressure, fold patterns and the number and type of tethers, have changed in recent years, all of which may have collectively contributed to the reduced aggressiveness of air bags.

To assess the impact of the redesigned air bags on the numbers of air bag-induced fatalities, we used the available SCI data. We compared the rate per million registered vehicles of air bag-induced fatalities for the first 27 months that MY 1998 redesigned vehicles were on the road with the rate of air bag-induced fatalities for the first 27 months that MY 1996–97 vehicles were on the road. We took this approach in an effort to ensure that the amount of exposure was comparable for both groups of vehicles. We found that the air bag-induced fatality rate for all MY 1998 vehicles is 66 percent less than the fatality rate for MY 1996–97 vehicles (0.48 for MY 1998 versus an average of 1.43 for MY 1996–97).

Part of this reduction is the result of changes in vehicle design and part is the result of changes in behavior; *i.e.,* using seat belts more frequently, moving children into the back seat, and moving the driver's seat further back. We found evidence of behavioral changes by examining the front seat and rear seat distributions of all child passengers (age 0 to 12) in passenger cars, survivors plus fatalities, in the Fatal Analysis Reporting System (FARS) from 1995 through mid-1999. In cars with passenger air bags, the percentage of toddlers and infants riding in the back seat increased from about 70 percent in 1995 to about 90 percent in 1999.

D. Causes of Air Bag Fatalities

Several factors are common to air bag-induced fatalities. First, they involve air bags that do not meet the suppression or low risk deployment requirements of this rule. Second, the occupants are generally very close to an air bag module when the air bag begins to deploy during a crash.[5] The one fact that is common to all persons who died is *not* their height, weight, gender, or age. Instead, it is the fact that they were very close to an air bag when it started to deploy. For some people, *e.g.,* infants in rear-facing infant seats, this occurred because they were initially sitting very close to the air bag. For the other occupants, this typically occurred because they were not restrained by seat belts or child safety seats and moved forward during pre-crash braking.

Closeness is a problem because, in order for an air bag to cushion an occupant's head, neck, chest and abdomen and keep the occupant from hitting the steering wheel, windshield or instrument panel, the air bag must move into place quickly. The force of a deploying air bag is greatest as the air bag begins to inflate. If occupants are very close to or in contact with the cover of an air bag that does not meet the low risk deployment requirements of this rule, they can be hit with enough force to cause serious injury or death when the air bag begins to inflate. This can be caused either by the cover as the air bag breaks out of the module (known as the ''punch-out'' effect) or by the unfolding and inflating air bag as it first conforms to the contours of the occupant and then moves rapidly into its fully-inflated shape (known as the ''membrane'' effect).[6]

In all of the 92 SCI confirmed fatalities involving children, the children were very close to the instrument panel when the air bag deployed. Because of their proximity, the children sustained fatal head or neck injuries from the deploying passenger air bag.

Eighteen fatally-injured infants were close to the air bag because they were in rear-facing infant seats installed directly in front of a passenger air bag. A rear-facing infant seat which is installed in the front seat of a vehicle with a passenger air bag will almost always position the infant's head very close to the passenger air bag. Several other infants were being held in the lap of a passenger.

All but a few of the 74 fatally-injured older children were not using any type of restraint.[7] Of those who were restrained, most were not correctly restrained. The non-use or improper use of occupant restraints allowed the vast majority of these children to move forward during pre-impact braking[8] before the actual crash. As a result, they

[3] The report indicates that some vehicle manufacturers had already depowered some air bags prior to the March 1997 rule.

[4] Again, these changes began before the March 1997 rule, but have accelerated since then.

[5] Vehicle speed is not a causative factor. Most of the crashes involving fatalities that have been confirmed as air bag-induced occurred at relatively low speeds. If the passenger air bag had not deployed in those low speed crashes, the people would probably not have been killed or seriously injured.

[6] In general, a driver can avoid any serious air bag risks by sitting at least 10 inches away from the air bag (measured from the breastbone to the center of the air bag cover) and by wearing a lap/shoulder seat belt. Teenage and adult passengers can avoid this risk by moving their seat as rearward as possible and wearing their seat belts. Even in a vehicle that does not have any air bags, children should ride in the rear seat whenever possible, since that is a significantly safer location.

[7] NHTSA notes that almost all of the 68 fatally-injured children were 1–7 years old.

[8] Pre-impact braking was a factor in a very high percentage of crashes resulting in the deaths of the older children.

were very close to the air bag when it deployed.

As in the case of the children fatally injured by air bags, the key factor regarding the confirmed deaths of adults has been their closeness to the air bag when it deployed. The most common factor that allowed them to become very close to the air bag was the failure to use seat belts. Only 18 of the 60 drivers are known to have been properly restrained by lap and shoulder belts at the time of the crash.

II. The Rule, Its Rationale, and Its Implementation

A. Key Provisions of the Rule

Early Agency Efforts to Reduce Air Bag Risks

Since the early 1990s, NHTSA has been taking steps to induce changes in behavior and technology to reduce the risk of such deaths and serious injuries to children and small adult drivers, especially when they are out-of-position.[9] We focused our initial efforts to reduce air bag risks on a public education campaign to alert the public about the dangers of air bags to children in general and to infants in particular. We urged parents to place their children always in the back seat and to ensure that they were always properly restrained. We required informative, text-only, warning labels to be placed in new motor vehicles and on child restraints.

1996 Comprehensive Plan for Addressing Air Bag Risks

To address the problems that arose with the air bags installed in many motor vehicles, the agency announced a comprehensive plan in November 1996. The plan set forth an array of immediate, interim and long-term measures. The immediate and interim measures focused on behavioral changes and relatively modest technological changes. The long-term measures focused on more significant technological changes, *i.e.,* advanced air bag technologies. The immediate steps included expanding efforts to persuade parents to place their children in the rear seat; requiring new labels with eye-catching graphics and colors and strong, clear warning messages; extending the period of time for permitting the installation of original equipment on-off switches in new vehicles which either lacked a rear seat or had a rear seat too small to permit the installation of a child restraint system; and permitting the installation of retrofit on-off switches in vehicles-in-use to protect people in at-risk groups. Because of the lead time needed to develop and install advanced air bag technologies, NHTSA announced plans to propose an interim measure to accelerate manufacturer efforts to redesign their air bags. In the long term, the agency said that it would conduct rulemaking to require the installation of advanced air bags.

Contribution of Behavioral Changes and the Current, Redesigned Air Bags to Reducing Air Bag Risks

To implement the interim phase of the comprehensive plan and speed the redesigning and recertifying of air bags to reduce the risks to out-of-position occupants, we amended Standard No. 208, Occupant Crash Protection, 49 CFR 571.208, to establish a temporary option under which vehicle manufacturers could certify their vehicles based on a 48 km/h (30 mph) unbelted sled test using a 50th percentile adult male dummy, instead of the 48 km/h (30 mph) unbelted rigid barrier crash test using that dummy. 62 F.R. 12960; March 19, 1997.

Available data indicate that the redesigned air bags, together with behavioral changes, such as placing more children in the back seat, have reduced the risks from air bags for the at-risk populations. Although these real-world data reflect only about two years of field experience with redesigned air bags, they preliminarily indicate that the redesigned air bags in model year (MY) 1998 and 1999 vehicles provide the same level of frontal crash protection as that provided by earlier air bags.

While the redesigned air bags in current motor vehicles have contributed to the reduction in the risk of air bag-induced injuries, they can still cause death or serious injury to unrestrained occupants. We selected the provisions adopted in this rule to ensure that future air bags provide more frontal crash protection, and reduce risk further, than either the current redesigned air bags or air bags that would have been minimally compliant with the sled test.

Transportation Equity Act for the 21st Century

The Transportation Equity Act for the 21st Century (TEA 21), enacted by Congress in June 1998, requires us to issue a rule amending Federal Motor Vehicle Safety Standard No. 208, Occupant Crash Protection:

> * * * to *improve occupant protection* for occupants of different sizes, belted and unbelted, under Federal Motor Vehicle Safety Standard No. 208, *while minimizing the risk* to infants, children, and other occupants from injuries and deaths caused by air bags, *by means that include advanced air bags.*

(Emphasis added.)

TEA 21 specifies that its twin goals are to be accomplished by means that include advanced air bag technologies. Although these technologies are beginning to be incorporated in some new vehicles, many aspects of those technologies are still undergoing development and refinement today.

The rule is required to be consistent with section 30111 of Title 49. Section 30111 requires that, among other things, Federal motor vehicle safety standards be practicable, meet the need for motor vehicle safety, and be stated in objective terms.

Under TEA 21, we were to issue the rule by September 1, 1999, unless we determined that the rule could not be issued by that date. The many issues in this rulemaking led us to make such a determination. We notified Congress of this determination in a letter dated August 3, 1999. Therefore, under TEA 21, we were required to issue the rule by March 1, 2000.

TEA 21 addresses various other issues, including the effective date and phase-in for the requirements adopted in this rule, as well as the opportunity to earn phase-in credits through early compliance. A complete discussion of TEA 21's provisions is included in the 1998 notice of proposed rulemaking (NPRM). See 63 F.R. 49958 at 49961; September 18, 1998.

The Gathering of Information and Soliciting of Comments for This Rulemaking To Reduce Air Bag Risks Further

Since 1996, the agency has been carefully laying the groundwork for completing the implementation of its comprehensive plan by issuing this rule. We have made extensive efforts to gather information and solicit public comments that would help us identify and adopt a sensible, effective array of requirements for increasing protection and minimizing risk. In February 1997, we held a public technical workshop on advanced air bag technologies. In December 1997, we sent an Information Request (IR) to the vehicle manufacturers to obtain detailed information concerning their changes in air bag design during the 1990s. In April 1998, Jet Propulsion Laboratories completed, at NHTSA's request, a report titled ''Advanced Air Bag Technology Assessment.'' In mid-1998, Congress made the judgment that advanced air bags should be required. It enacted TEA

[9] Even before the 1990's, the issue of air bag-induced risks to out-of-position occupants was addressed by the agency in its rulemaking and research related to air bags. For a history of those earlier activities, see Appendix B at the end of this preamble.

21 mandating that we amend our occupant protection standard to require vehicle manufacturers to improve the protection provided by air bags and to reduce the risks associated with them by means that include advanced air bag technologies. Although TEA 21 required only that we seek public comment once on our proposals before taking final action, we asked for public comment twice. We issued a notice of proposed rulemaking (NPRM) in September 1998, and a supplemental notice of proposed rulemaking (SNPRM) in November 1999. To help us thoroughly explore the issues, we proposed or discussed in those two notices a variety of alternatives and posed a wide-ranging array of questions. Based on the information we received in response to the 1997 IR, we completed a report titled ''Air Bag Technology in Light Passenger Vehicles'' in December 1999.

Changes to Our Initial Proposals in Response to Information and Comments

We carefully considered the information we gathered and the comments we received on the 1998 NPRM and appropriately adjusted our proposals in the 1999 SNPRM to respond to those materials. For example, based on the public comments on the NPRM regarding the type and number of tests needed to meet the risk minimization goals of TEA 21, we significantly reduced the number of those tests when we issued the SNPRM.

Further, there was a substantial shift between the NPRM and SNPRM in the issues that needed to be resolved in determining which test should be specified to promote the improvements required by TEA 21 in the ability of vehicles to protect unbelted people in moderate to high speed crashes, *i.e.,* those that are potentially fatal. In the NPRM, the primary issue was whether we should (1) retain the unbelted sled testing option, or (2) delete that option, leaving the existing 48 km/h (30 mph) unbelted rigid barrier crash testing provision as the sole basis for certification compliance with Standard No. 208's requirements regarding the protection of unbelted occupants.[10]

In the SNPRM, the primary issue regarding unbelted testing was what type of unbelted crash test should be specified, and at what top speed. We proposed several alternatives. One alternative was to test unbelted protection in an improved unbelted rigid barrier crash test with a top speed within the range of 40 to 48 km/h (25 to 30 mph). We said that if we issued a rule setting the maximum speed at 40 km/h (25 mph), we might also increase the maximum speed of the belted rigid barrier test from the current 48 km/h to 56 km/h (30 to 35 mph). Another alternative was to test unbelted protection in an unbelted offset deformable barrier test with a maximum speed to be established in the rule within the range of 48 to 56 km/h (30 to 35 mph).

In addition, we sought comment on other possibilities. One was to issue ''a final rule temporarily reducing the maximum speed for the unbelted rigid barrier test to 40 km/h (25 mph) (or some other speed, *e.g.,* 44 km/h (27.5 mph))'' and then returning ''it to 48 km/h (30 mph) after an appropriate period of time, *e.g.,* after the TEA 21 phase-in.'' Another was ''to temporarily permit relaxed injury criteria performance limits (e.g., 72 g chest acceleration limit instead of 60 g chest acceleration limit) in unbelted rigid barrier tests between 25 mph and 30 mph.''

Finally, we proposed in the SNPRM that the agency would not test at a speed of less than 29 km/h (18 mph) under the unbelted rigid barrier test alternative, and that the agency would not test at a speed of less than 35 km/h (22 mph) under the unbelted offset deformable barrier test alternative. This was not only a departure from the proposal in the NPRM, but also from prior agency practice. In the NPRM, we had proposed to test at any speed up to the maximum test speed. One reason for this change was that we wanted to be sure that the standard did not push deployment thresholds downward, *i.e.,* cause air bags to be deployed at lower speeds than are appropriate for maximum occupant protection.

Public Comments on the SNPRM

The commenters on the SNPRM, including vehicle manufacturers, air bag manufacturers, insurance companies, public interest groups, academia, and the National Transportation Safety Board (NTSB), generally agreed with most aspects of that document. For example, the commenters agreed with the agency's proposals to reduce air bag-induced risks by specifying that driver air bags deploy in a low-risk manner in low speed crashes and the passenger air bags either deploy in that manner or turn off in the presence of young children.

With respect to our proposals for improving occupant protection, most commenters supported replacing the unbelted sled test with an unbelted rigid barrier crash test. The vehicle manufacturers, which had opposed a rigid barrier test in their comments on the NPRM, agreed to a return to such a test.

However, while there was a convergence of opinion as to the type of unbelted test, there was a sharp difference of opinion among the commenters on the SNPRM regarding the maximum speed for the unbelted rigid barrier crash test. Several safety advocacy and consumer groups urged that the maximum speed be kept at 48 km/h (30 mph). The vehicle manufacturers, air bag suppliers, an insurance industry safety organization, and several other organizations, believing that a maximum test speed of 48 km/h (30 mph) could make significant repowering necessary, urged that the maximum speed be set at 40 km/h (25 mph). They urged further that the speed be maintained at that level pending analysis of field experience with the air bags installed in motor vehicles during that period. For similar reasons, the NTSB also urged a maximum test speed of 40 km/h (25 mph).

There were also significant differences of opinion regarding our proposals about the provision providing a due care defense against findings of noncompliance with the air bag requirements of Standard No. 208 and about the wording of the statements regarding air bag-induced risks on the proposed vehicle labels.

We note that a substantial number of comments were submitted to the docket for the SNPRM after the comment closing date. In preparing this rule, we have considered all comments placed in the docket on or before April 28, 2000.

The Development of a Data-Driven Rule

Before we made decisions on which provisions should be included in this rule to improve air bag performance as required by TEA 21, we carefully considered the available information and the public comments, the underlying safety problems, the performance of air bag systems in current motor vehicles, the ability (including lead time needs) of vehicle manufacturers to achieve better performance in future motor vehicles, the air bag technology (including advanced air bag technology) currently available or being developed, the cost of compliance, and other factors. Because

[10] As explained in greater detail below, this rule transforms unbelted rigid barrier testing under Standard No. 208 through the adoption of new and more stringent injury criteria, a new small adult female dummy seated far forward of where the existing mid-sized adult male dummy is placed in compliance testing, a new belted offset test to ensure that sensors work properly in crashes that are not similar to a crash into a rigid barrier and the establishment of complementary risk reduction tests that will affect how manufacturers comply with the unbelted rigid barrier test in the future.

the comments on the SNPRM focused on the alternatives for improving the protection provided by air bags, we were particularly careful in considering the comments concerning the costs, benefits and risks associated with each of those alternatives.

The requirements in today's rule for improving protection and minimizing risk are challenging and will push the vehicle manufacturers to make needed safety improvements in air bag performance. Our decisions regarding the selection of those requirements was based on available test data and analysis, and our informed judgment about the best way of implementing the requirements of TEA 21.

The Principal Provisions of the Rule

The rule will improve protection and minimize risk by requiring new tests and injury criteria and specifying the use of an entire family of test dummies: the existing dummy representing 50th percentile adult males, and new dummies representing 5th percentile adult females, six-year old children, three-year old children, and one-year old infants. With the addition of those dummies, our occupant crash protection standard will more fully reflect the range in sizes of vehicle occupants. As noted above, most aspects of this rule are supported by most commenters on this rulemaking, including vehicle manufacturers, air bag manufacturers, insurance companies, public interest groups, academia, and the NTSB.

The rule will be phased in during two stages. The first stage phase-in requires vehicles to be certified as passing the unbelted test requirements for both the 5th percentile adult female and 50th percentile adult male dummies in a 40 km/h (25 mph) rigid barrier crash, and belted test requirements for the same two dummies in a rigid barrier crash with a maximum test speed of 48 km/h (30 mph). In addition, the first stage requires vehicles to include technologies that will minimize risk for young children and small adults.

The second stage phase-in requires vehicles to be certified as passing the belted test requirements for the 50th percentile adult male dummy at 56 km/h (35 mph). This requirement will ensure improved protection for belted occupants.

Risk Minimization Provisions Implemented During First Stage Phase-in

During the first stage phase-in, from September 1, 2003 to August 31, 2006, increasing percentages of motor vehicles will be required to meet requirements for minimizing air bag risks, primarily by either automatically turning off the air bag in the presence of young children or deploying the air bag in a manner much less likely to cause serious or fatal injury to out-of-position occupants. If they so wish, manufacturers may choose to use a combination of those two approaches.

Manufacturers that decide to turn off the passenger air bag will use weight sensors and/or other means of detecting the presence of young children. To test the ability of those means to detect the presence of children, the rule specifies that child dummies be placed in child seats that are, in turn, placed on the passenger seat. It also specifies tests that are conducted with unrestrained child dummies sitting, kneeling, standing, or lying on the passenger seat.

The ability of air bags to deploy in a low risk manner will be tested using child dummies on the passenger side and the small adult female dummy on the driver side. For manufacturers that decide to design their passenger air bags to deploy in a low risk manner, the rule specifies that unbelted child dummies be placed against the instrument panel. This location was selected because pre-crash braking can cause unrestrained children to move forward into or near that position before the air bag deploys. The air bag is then deployed. The ability of driver air bags to deploy in a low risk manner will be tested by placing the 5th percentile adult female dummy against the steering wheel and then deploying the air bag.

Protection Improvement Provisions Implemented During First Stage Phase-in

In addition, the vehicle manufacturers will be required to meet a rigid barrier crash test with both unbelted 5th percentile adult female dummies and unbelted 50th percentile adult male dummies. The unbelted rigid barrier test replicates what happens to motor vehicles and their occupants in real world crashes better than the current sled test does. The maximum test speed for unbelted dummy testing will be 40 km/h (25 mph).

Our decision to set the maximum test speed for unbelted dummy testing at 40 km/h (25 mph) is being issued as an interim final rule. We conclude that is the appropriate test speed for at least the TEA 21 implementation period (MY2004–2007). That speed will provide vehicle manufacturers with the flexibility they need during that period to meet the technological challenges involved in simultaneously improving protection and minimizing risk. To achieve those twin goals, the manufacturers will have to comply with the wide variety of new requirements using an array of new dummies during this near-term time frame.

However, we draw no final conclusion about the appropriateness of that test speed in the longer run. At this time, we cannot assess whether the uncertainty about the manufacturers' ability to improve protection further and minimize risk simultaneously will persist beyond the TEA 21 implementation period. In addition, while we believe that it is unlikely that a 40 km/h (25 mph) maximum test speed will lead to a reduction in high speed protection, we cannot rule out that possibility. If manufacturers were to engage in significant depowering, it could result in lesser crash performance for teenage and adult occupants. On the other hand, even if current levels of real world protection were only maintained, rather than improved, the marginal benefits of a 48 km/h (30 mph) unbelted maximum test speed would be significantly diminished or eliminated.

To help resolve these issues and concerns, we are planning a multi-year effort to obtain additional data. The activities comprising that effort are described in the section below entitled, ''Monitoring of Implementation and Field Experience; Research and Technology Assessment.'' Based on the results of those information gathering and analysis efforts, we will make a final decision regarding the maximum test speed for unbelted dummy testing in the long run, after providing opportunity for informed public comment.

There are still other additions to Standard No. 208. To ensure that vehicle manufacturers upgrade their crash sensing and software systems as necessary to prevent late air bag deployments in crashes with soft pulses, vehicles will be required to meet an up-to-40 km/h (25 mph) offset deformable barrier test using belted 5th percentile adult female dummies. A late air bag deployment would allow enough time for an unrestrained occupant to move forward into the steering wheel or instrument panel during a crash before the air bag deploys. Thus, the occupant would be in contact with or very close to the air bag module when the air bag deploys, creating a risk of severe or fatal injury. In addition, the 5th percentile female dummy is added to the 48 km/h (30 mph) belted rigid barrier test.

Provision Implemented During Second Stage Phase-in

During the second stage phase-in, from September 1, 2007 to August 31, 2010, the maximum test speed for the belted rigid barrier test will increase

from 48 km/h (30 mph) to 56 km/h (35 mph) in tests with the 50th percentile adult male dummy only. As in the case of the first-stage requirements, this second-stage requirement will be phased in for increasing percentages of motor vehicles. We did not include the 5th percentile adult female dummy in this requirement because we have sparse information on the practicability of such a requirement. As noted below, we will initiate testing to examine this issue and anticipate proposing increasing the test speed for belted tests using the 5th percentile adult female dummy to 56 km/h (35 mph), beginning at the same time that the belted test must be met at that speed using the 50th percentile adult male.

Schedule for Implementation

We have changed the date on which the implementation of this rule begins from September 1, 2002, as proposed in the SNPRM, to September 1, 2003. This gives vehicle manufacturers as much lead time as TEA 21 allows for the first stage phase-in. TEA 21 does not permit a later starting date. This change will give the manufacturers a lead time of more than 3 years for vehicles produced during the first year (Model Year (MY) 2004) of that phase-in and more than 6 years for vehicles produced during MY 2007, the first MY in which vehicle manufacturers will be required to manufacture all of their vehicles in compliance with the first stage requirements without the aid of credits.

We changed the starting date for the first stage in part because of the breadth of the challenges that the vehicle manufacturers will be required to meet during that stage. They will need to certify their vehicles to an unbelted barrier test instead of a sled test. Moreover, they will need to meet this test for the new 5th percentile adult female dummy seated all the way forward as well as for the existing 50th percentile adult male dummy seated in the mid-track position. They will also need to meet a new belted offset deformable barrier test using the 5th percentile adult female dummy and a belted rigid barrier test for both 50th percentile adult male dummies and 5th percentile female dummies. For all of these tests, they will need to meet new injury criteria performance limits. Finally, the vehicle manufacturers will need to certify their vehicles to an array of test requirements to minimize the risk to infants, children, and other occupants from injuries and deaths caused by air bags using the 5th percentile adult female dummy and the child dummies. The starting date of September 1, 2003 will give the manufacturers additional time to gain experience with the new dummies, final specifications for which have only recently been established.

Further, the longer lead time for the first stage phase-in will also promote technological innovation regarding ways of minimizing risks. It will give vehicle manufacturers more time to complete development and testing of the advanced technologies they plan to use. Further, we are aware that suppliers are continuing work on additional technologies. The additional time will enable the manufacturers to explore further using some of these additional technologies.

Rationales for Risk Minimization Requirements

The agency drafted the risk minimization requirements to give vehicle manufacturers a broad choice among those advanced air bag technologies that can be used either to turn air bags off in appropriate circumstances or cause air bags to deploy in a low risk manner.[11] Thus, the vehicle manufacturers will have the freedom to choose from a variety of available technological solutions or to innovate by developing new ones if they so desire.

We estimate that if advanced air bag technologies (suppression and low risk deployment) are 100 percent reliable, they could have eliminated 95 percent of the known air bag fatalities that have occurred to date in low speed crashes. For example, weight sensors can be installed in the passenger seat so that the passenger air bag is turned off when children, from infants up to the typical 6-year-old, are present. The use of weight sensors for that purpose should essentially eliminate the risk of air bag-induced fatal injuries for children in that size and age range. Based on available data, it does not appear that turning air bags off for those young children would result in the loss of any benefits. There is an element of uncertainty about the level of reliability and effectiveness of the suppression for children from 0 to 6 years old and low risk deployment designs that will be actually installed in vehicles. We also note that we do not currently have a dummy suitable for assessing the effectiveness of suppression and low risk deployment for children ages 7–12. (See the section below entitled, ''Future Rulemaking Plans.'') Our decision concerning the maximum test speed for the unbelted rigid barrier test reflects, in part, these uncertainties and limitations.

The availability of advanced air bag technologies for minimizing risks is not just a theoretical possibility. Vehicle manufacturers are very actively working on completing their development and testing of weight sensor systems so that they will be ready for installation for the passenger air bags in their motor vehicles. Installation could begin as early as the next model year.[12] Means of reducing risk for drivers, including dual-stage air bags coupled with sensors for driver seat belt use and driver seat position, are already being installed in some vehicles. For a description of advanced technologies and a partial listing of current models equipped with one or more types of those technologies, see Appendix D, ''Advanced Technologies for Improving Air Bags.''

Rationales for Protection Improvement Requirements

Replacing the Unbelted Sled Test With the Unbelted Rigid Barrier Crash Test

The agency has decided to delete the sled test option and retain the unbelted rigid barrier crash test provision for the reasons explained in the NPRM and SNPRM. Among those reasons is that a crash test replicates how vehicle structures and air bag systems work together in real world crashes. A sled test cannot do that because while the vehicle is quickly decelerated in such a test, it never crashes into anything. As a result, the sled test cannot take into account the ability of a motor vehicle's structure to manage crash energy. Further, the sled test uses a generic crash pulse instead of the individual crash pulse of the particular vehicle being tested, and deploys all air bags at a fixed time during the event rather than having that decision made by the crash sensing system of the vehicle.

Selection of 40 km/h (25 mph) as Top Speed for Unbelted Rigid Barrier Test

In developing today's rule, we gave serious consideration to specifying 40 km/h (25 mph) as the maximum speed for the unbelted rigid barrier test for an initial period (so that vehicle manufacturers could focus during that period on risk minimization) and then phasing-in a 48 km/h (30 mph) unbelted test speed in the 2008 through 2010 model years. Our initial inclination to

[11] The rule also establishes very general performance requirements for dynamic automatic suppression systems (DASS) and a special expedited petitioning and rulemaking process for considering procedures for testing advanced air bag systems incorporating a DASS. In response to comments, modifications have been made to address concerns about confidentiality and timing.

[12] The MY 2001 Ford Windstar will, according to a report in the April 24, 2000 edition of Automotive News, be equipped with an advanced air bag system ''designed to prevent the deployment of the front passenger airbag when sensors determine the passenger's weight is less than 45 pounds.''

increase the maximum test speed to 48 km/h (30 mph) during the second of two phase-ins reflected several considerations. First, our testing of vehicles with redesigned air bags indicated that the vast majority of current vehicles can meet that test using 50th percentile adult male dummies. Those test results were not rebutted by any significant test data provided by the motor vehicle manufacturers or others. Therefore, the record did not support the argument by the motor vehicle manufacturers and others that a 48 km/h (30 mph) test using a 50th percentile adult male dummy would require any kind of general ''repowering'' of air bags.[13] Second, we concluded that air bags could be designed to meet a 48 km/h (30 mph) test with both 5th percentile adult female dummies and 50th percentile adult male dummies without increasing risks to out-of-position occupants.[14] Third, we believed that a specific requirement to return eventually to a 48 km/h (30 mph) test should be adopted to ensure that vehicle manufacturers did not engage in significant additional depowering of air bags, or make them substantially smaller, which would reduce their protectiveness to occupants in high speed crashes.[15] We believed then that there could be an economic incentive to install air bags that were minimally compliant with a 40 km/h (25 mph) test.

After further examination of the issues and the information before us, and an assessment of the areas of uncertainty about simultaneously improving protection and minimizing risk, we have concluded that the adoption of a 48 km/h (30 mph) unbelted requirement would not be in the best overall interest of safety. We have decided instead to set the maximum test speed for the unbelted rigid barrier crash tests at 40 km/h (25 mph) as an interim final rule. We selected that test speed based on several factors.

First, particularly given the risks that the first generation of air bags posed to out-of-position children and small adult females, and the reaction of the public to those risks, it is very important that advanced air bags be properly designed from the very beginning. We note that air bags, by their nature, present a potential for safety trade-offs not presented by other safety features. That is, while air bags dissipate crash energy for most occupants when they interact with them when fully inflated, the energy released during deployment could be injurious to out-of-position occupants in their interaction with an inflating air bag. This interaction of an occupant and a deploying air bag can be a source of serious injury or death. In contrast, other safety features typically just dissipate energy when occupants interact with components in the vehicle interior in crashes; they do not add energy. Because of this potential for death and injury, we want to be cautious in how far and how fast vehicle manufacturers are required to advance the state of advanced air bag technologies in their vehicles.

Since a significant percentage of current vehicles can already satisfy the new unbelted barrier crash test at 40 km/h (25 mph) with both the 5th percentile adult female dummy and the 50th percentile adult male dummy, we conclude that setting the maximum speed at that level will help vehicle manufacturers to focus their resources and compliance efforts during the first stage on meeting the risk reduction requirements. We want to continue the progress already made in using technological means for reducing air bag-induced risks.

While the manufacturers' resources for dealing with air bags, as well as all the other engineering issues associated with future motor vehicles, are extensive, there are limits to how much can be done at any one time. We need to consider the variety and complexity of changes in air bag testing and technology that will be required by this rule. As we noted above in the discussion of the implementation schedule, the array of new requirements that the manufacturers will have to meet in the first stage is challenging. We are requiring the use of a new test dummy (the 5th percentile adult female) in high speed tests, adding a new test (offset belted), adding new neck injury criteria, and making existing injury criteria more stringent (chest deflection). We are also adding an entire new series of risk minimization tests, which will require manufacturers to install air bag suppression systems or low-risk deployment systems, or both.

We are particularly concerned about the difficulties of trying to meet the unbelted rigid barrier test at 48 km/h (30 mph) with both adult dummies while simultaneously trying to reduce the risks of air bag-induced injuries and deaths. As noted above, the unbelted rigid barrier crash test specified by this rule for the future is an improved test that differs fundamentally from the unbelted rigid barrier test that Standard No. 208 has specified in the past. In the past, the Standard specified only that test and the belted rigid barrier test, and used only one dummy, the 50th percentile adult male dummy. The injury criteria for the unbelted rigid barrier crash test did not evaluate the potential for neck injuries and allowed even greater chest deflection. The Standard specified no other requirement (such as one for out-of-position testing) that had the effect of making it more difficult to achieve compliance with the unbelted rigid barrier test.

[13] Based on NHTSA crash tests (including tests of some vehicles with stiff crash pulses) of a variety of types and sizes of vehicles in the current new vehicle fleet, we concluded that the air bags in the vast majority of current vehicles would pass a 48 km/h (30 mph) crash test using a 50th percentile adult male dummy with much the same compliance margins as before. Thus, we concluded that more power was not needed for those vehicles to pass that test with that dummy. Further, the fact that some current vehicles with stiff pulses meet the injury criteria suggested that vehicle manufacturers might not have to repower air bag systems in other stiff pulse vehicles in order to meet the criteria.

More fundamentally, we reasoned that air bags that currently have enough power to meet the injury criteria using the 78 kg (172 lb.) 50th percentile adult male dummy would not need more power to meet the criteria using the much lighter 50 kg (110 lb.) 5th percentile adult female dummy. Our tests indicate that the primary problem for the small female dummy in those current vehicles that do not satisfy the injury criteria in a 48 km/h (30 mph) test with the 5th percentile adult female dummy is that the dummy experiences too much force in the neck or chest area. We said further that the solution for the smaller, lighter female dummy would not be to put additional power into the bag. Not only would that step be unnecessary to protect the 50th percentile adult male dummy, but also it would be likely to exacerbate the problems with the small female dummy. We concluded that the solution would be to redesign the air bag system—using recessed air bags and new sensors, multiple inflation levels, fold patterns, bias flaps, etc.—to assure compliance for both the 5th percentile adult female dummy and 50th adult male dummy.

[14] We noted that tests of some current production vehicles demonstrate that they incorporate the designs and technologies necessary to enable them to comply at 48 km/h (30 mph) on both the driver and passenger sides with both dummies. These technologies include improved air bag folding, bias flaps, and internal baffles/tethers. We believed that manufacturers could add other measures such as dual-stage inflators, seat position sensors, recessed air bag modules, and better energy-absorbing steering columns. If any vehicle manufacturer wished to do so, it could also develop and provide chambered, dual-stage air bags that are designed to fill fully only an inner chamber of the air bag, instead of the entire air bag, when the driver seat is near the full forward adjustment position on the seat track.

[15] We noted that the difference between a 40 km/h (25 mph) and a 48 km/h (30 mph) crash is significant. The significance does not lie in the 20 percent increase in speed, but in the 44 percent increase in crash energy. It is because of that increase in crash energy that the risk of serious or fatal injury is significantly higher at 48 km/h (30 mph) than at 40 km/h (25 mph). Further, a maximum test speed of 48 km/h (30 mph) represents a higher percentage of the crashes that produce serious or fatal occupant injuries. As a result, if air bags were designed only to minimally meet a 40 km/h (25 mph) crash test, many occupants, particularly larger occupants, would not be adequately protected in higher speed crashes. We estimated that 248 to 413 lives could be lost annually if manufacturers did only the minimum required of them by a 40 km/h (25 mph) crash test requirement.

In the future, however, greater efforts will be needed to comply with that test because manufacturers will be required to meet a greater variety of requirements.

The unbelted rigid barrier test will have to be met using new or more stringent injury criteria with the new 5th percentile adult female dummy as well as the existing 50th percentile adult male dummy. The necessity of meeting those criteria with the 5th percentile adult female dummy placed in vehicle seats that have been moved all the way forward will add considerably to the challenge of meeting that test. For both belted and unbelted tests, we are adopting improved injury criteria to assure greater protection by air bags in high speed crashes. More specifically, we are changing the way in which the risk of head injuries is measured, adding a new neck injury measure that accounts for the combination of flexion, extension, tension, and compression, and reducing the amount of allowable chest deflection.

Further, efforts to comply with the unbelted rigid barrier test will be affected by the simultaneous need to comply with the risk reduction requirements. In the future, air bags will be explicitly required to be tested for their potential to harm vulnerable occupants as well as offer protection in high-speed crashes.

While advanced air bag technologies will facilitate simultaneously achieving the goals of improving protection and minimizing risk, we cannot forecast the pace of development of those technologies. Setting the maximum speed at 40 km/h (25 mph) will give vehicle manufacturers greater flexibility to choose among and gain experience with advanced air bag technologies. It will also give NHTSA a chance to gather data about the performance of vehicles using advanced air bag technologies. We want the installation of advanced air bag technologies by the vehicle manufacturers across the full spectrum of their fleets to be done correctly—the first time.

Accordingly, we believe that it is preferable to take an approach that best assures improved air bag performance for occupants of all sizes, without compromising efforts to minimize the risks of injury to vulnerable occupants, including children and short women seated very close to air bags, and out-of-position occupants. Such an approach is one that involves the least uncertainty for the occupants who have been most at risk. In other words, as long as the manufacturers improve the already substantial overall level of air bag protection provided by current redesigned air bags, the uncertainty involved in meeting the challenge to improve high-speed protection and minimize risk simultaneously is best resolved at this point in favor of minimizing risk. This is especially true in the early stages of the introduction of advanced air bag technologies. Compared with a 48 km/h (30 mph) unbelted rigid barrier test, a 40 km/h (25 mph) unbelted rigid barrier test presents less chance of inadvertently increasing risks to out-of-position occupants.

Second, while we believe that it should eventually be possible for vehicles to provide protection for both small females and mid-sized males in a 48 km/h (30 mph) unbelted test without compromising efforts to minimize the risks of serious air bag-induced injuries, there are unresolved issues. Our laboratory tests and knowledge of advanced technologies do not tell us how or when developments might reach that point. They also do not provide us with a full picture of the real world consequences of adopting that test speed. Thus, this type of information, by itself, is not necessarily sufficient to enable us to determine whether adopting that speed is worthwhile, much less needed, from a safety standpoint.

We assessed the relative merits of maximum test speeds of 40 km/h (25 mph) and 48 km/h (30 mph) in light of the initial advanced air bag systems that manufacturers will introduce over the next several years. Based on that assessment, we are concerned that the need for vehicle manufacturers to take steps to enable them to certify to a 48 km/h (30 mph) unbelted test could create difficulties in improving protection and minimizing risks for the wide range of occupants and crashes in the real world. A good example of how these potential problems might occur relates to how a vehicle manufacturer might use a dual-stage air bag to meet the goals of this rulemaking.

One strategy for meeting an unbelted 48 km/h (30 mph) barrier requirement for both 5th percentile adult females and 50th percentile adult males would be to use the first stage inflation level for the 5th percentile adult female and the second stage inflation level for the 50th percentile adult male. However, under that strategy, the need to certify to the 48 km/h (30 mph) barrier test for the 5th percentile adult female dummy would require a relatively faster inflation in the first stage. Because that dummy will be placed in a vehicle seat moved all the way forward, the air bag will have to deploy especially quickly to provide protection. The use of a relatively faster first stage would conflict with the strategy of using as benign a first stage inflation level as possible in lower speed crashes to reduce risks to out-of-position occupants. Alternatively, the vehicle manufacturer could use the second stage inflation level for both the 5th percentile adult female and 50th percentile adult male dummies. While this strategy might be a good one for passing a rigid barrier test, in which the dummy does not move forward much before deployment, it might not be a good strategy for high speed real world crashes in which small adult females, who already sit close to the air bag, and unrestrained children move considerably closer as a result of pre-crash braking.

While we believe that dual-stage inflators represent a significant improvement over single level inflators, it is important to recognize that they have limitations. Some of these limitations could be overcome by inflators with more than two stages. However, this would add greater complexity, including additional gray zones. While these and other more advanced technologies, such as chambering and real time occupant position sensing, may become available in the future, we want to be cautious about the possibility of inducing manufacturers to install more advanced technologies before those technologies are fully ready. For example, vehicle manufacturers should gain real world experience with dual-stage inflators before they adopt inflators with additional stages. Also, in areas in which there is uncertainty as to what strategies might be best for safety, such as the specific performance characteristics for dual-level inflators, we want to be careful about adopting requirements that might be inappropriately design restrictive in making it difficult for vehicle manufacturers to design their air bags so that they perform well both in rigid barrier tests and in the wide range of real world crashes.

Third, we are also aware that the vehicle manufacturers need design flexibility to address issues regarding performance in real world crashes not directly replicated by Standard No. 208's tests.

As we have discussed on many occasions, one of the greatest limitations of non-advanced air bags is that they typically deploy in the same manner regardless of such factors as crash severity or occupant size, weight or position. In other words, they are non-adjusting, one-size-fits-all air bags. One of the principal strategies for improving

air bag performance is to provide different levels of deployment for different situations.

The most basic redesigned advanced air bags would allow different types of deployment to suit different crash situations. These air bags would have a dual-level inflator instead of a single-level inflator. Some vehicles already have such inflators. With two levels of inflation, the vehicle manufacturer can design the air bag system so that the level of inflation is dependent on such factors as crash severity, size and weight of the occupant, and position of the occupant. For example, the high level of inflation might be selected for high speed crashes and the low level of inflation for low speed crashes. Of course, the ability to select an inflation level based on these various factors would depend on the existence of sensors that provide relevant information about the above factors.

Successful implementation of air bags designed to vary their performance in response to sensed differences in crash severity or other conditions presents a challenge to the manufacturers in that these air bags have ''gray'' or transition zones, *i.e.,* ranges of conditions in which the air bag changes from one level of performance to another. At very low speeds, there will be uncertainty within a gray zone about whether the air bag will deploy or not deploy and at higher speeds, there will be uncertainty about which level of performance will be triggered. For example, there will be a gray zone of crash severity in which there is uncertainty whether a dual-stage air bag will deploy only its lowest powered stage or both stages.

Particularly given the importance we place on vehicle manufacturers ''getting it right'' the first time with advanced air bags, we believe it is appropriate for them to initially introduce relatively simple advanced systems, such as ones incorporating dual-level inflators and sensors that provide basic information about one or more of the factors identified above. While we believe that more complex systems, incorporating such features as several levels of inflation, chambering (e.g., creating, in effect, a small bag inside a larger bag) and real time occupant position sensing, offer promise of even greater benefits, there are significant uncertainties regarding the feasibility and thus availability of such systems, particularly the dynamic position sensing systems.

Fourth, a 40 km/h (25 mph) maximum test speed gives vehicle manufacturers more flexibility to address the greater compliance problems associated with vehicles, e.g., SUVs, with particularly stiff crash pulses. Since unbelted occupants moving forward in frontal crashes of these vehicles will have to be engaged more quickly than in vehicles with softer crash pulses, the task of designing air bag systems in stiff pulse vehicles is significantly more challenging. Our test experience with LTVs using the 5th percentile adult female dummy is very limited. We have conducted only three 48 km/h (30 mph) unbelted rigid barrier tests and only one 40 km/h (25 mph) unbelted rigid barrier test of LTVs with that dummy. Particularly given this limited test experience, we believe there are uncertainties with respect to the ability of manufacturers to meet a 48 km/h (30 mph) rigid barrier test requirement for both 50th percentile adult male dummies and 5th percentile adult female dummies.

Fifth, we believe that it is unlikely that vehicle manufacturers will significantly depower their air bags and minimally comply with the 40 km/h (25 mph) test. Our Final Economic Analysis concludes that there would not be any significant cost savings in installing air bags that were minimally compliant with a 40 km/h (25 mph) test. Vehicle manufacturers have not depowered their air bags so much that they minimally comply with the sled test. In fact, their current redesigned air bags significantly exceed the level of performance needed to meet not only the sled test, but also a 40 km/h (25 mph) rigid barrier crash test with the 50th percentile adult male dummy. As discussed above, the real world data to date for vehicles certified to the sled test, while preliminary, indicates that there has not been a loss of frontal crash protection compared to pre-MY 1998 vehicles.[16] If this result continues, future bags will greatly exceed the minimum performance requirements of the 40 km/h (25 mph) unbelted barrier test. Indeed, the vehicle manufacturers have indicated that they would not engage in significant, widespread additional depowering if a 40 km/h (25 mph) test were adopted. They argue that their need to perform well in NHTSA's 56 km/h (35 mph) belted NCAP tests limits, as a practical matter, any inclination that might theoretically otherwise exist to depower their air bags further. NHTSA notes that this rule increases the influence of 56 km/h (35 mph) belted testing by making passing such testing with 50th percentile adult male dummies mandatory. Thus, NHTSA believes that it is not risking a substantial loss of benefits by establishing an unbelted barrier test of 40 km/h (25 mph).

Sixth, our decision to replace the 48 km/h (30 mph) generic sled test with the 40 km/h (25 mph) unbelted rigid barrier test requires a significantly higher level of safety. The agency estimates that the sled test is roughly equivalent to a 35.5 km/h (22 mph) rigid barrier perpendicular (0 degree) crash. During the 1997 rulemaking, we looked at the relative safety consequences of an air bag designed to just meet the performance requirements associated with a 48 km/h (30 mph) generic sled test. The agency estimated the fatality impacts of designing a vehicle to minimally meet the performance requirements imposed by the current 48 km/h (30 mph) generic sled test and compared these to the fatality impacts of designing a vehicle to just meet the 40 km/h (25 mph) unbelted rigid barrier test. If these different design tasks did not have any impact on air bag size, air bags designed to the 40 km/h (25 mph) unbelted rigid barrier test could save 64 to 144 more lives than air bags designed to the generic sled test (assumed to be 35.5 km/h (22 mph)). If, on the other hand, air bags designed to the generic sled test would be smaller and provide no benefit in partial frontal impacts, because the 40 km/h (25 mph) unbelted rigid barrier test includes an up to 30

[16] To obtain a fuller understanding of these results, and the role played by the sled test and other provisions of Standard No. 208 in obtaining them, the agency conducted tests and examined information obtained from the vehicle manufacturers. The vehicle manufacturers did not depower all models. There was a wide range in the power of pre-MY 1998 air bags. As to those models that they did depower, they did not depower their air bags as much as they said they could or as much as we anticipated they might when we prepared the economic analysis accompanying our 1997 final rule that adopted the sled test option. Instead, as NHTSA tests have shown, the manufacturers typically chose levels of power that still enabled them to pass the pre-existing 48 km/h (30 mph) unbelted crash test with a 50th percentile adult male dummy. Further, these tests have revealed that vehicles with redesigned air bags pass that test with that dummy by roughly the same margin of compliance as earlier vehicles did. (It should be emphasized, as we note below in the section entitled, ''Selection of 40 km/h (25 mph) as Top Speed for Unbelted Rigid Barrier Test,'' that meeting the unbelted rigid barrier crash test at 48km/h (30 mph) with that dummy and a 5th percentile adult female dummy is significantly more challenging than meeting it with 50th percentile adult male dummy alone. It is still more challenging to meet that test with both dummies and minimize risk simultaneously. Thus, the ability to meet the 48 km/h (30 mph) unbelted crash test with a 50th percentile adult male dummy isn't, by itself, predictive of a vehicle manufacturer's ability to meet that test with both dummies, and the other requirements added by this rule.)

As to the differences between the anticipated amount of depowering and the amount of depowering actually performed and as to the performance of the current redesigned air bags, we also note that, as discussed below, depowering is not the only way of reducing the aggressiveness of air bags. There are other design changes that were made by some manufacturers.

degree oblique test while the generic sled test has no angular component, 282 to 308 more lives (this range includes the 64 to 144 estimates mentioned earlier) could be saved by air bags designed to the 40 km/h (25 mph) unbelted rigid barrier test with the oblique test than lives saved by air bags designed to just comply with the generic sled test.

Increasing Belted Test Speed to 56 km/h (35 mph) for 50th Percentile Male Dummy. In the SNPRM, we asked for comment on whether we should increase the speed for the belted test using the 50th percentile adult male dummy from 48 km/h to 56 km/h (30 mph to 35 mph) if we adopted 40 km/h (25 mph) as the maximum test speed for the unbelted rigid barrier test. This rule adopts that provision. It will be phased-in for increasing percentages of each manufacturer's fleet beginning in the 2008 model year. We did not propose including the 5th percentile adult female dummy in this requirement because we had sparse information on the practicability of such a requirement. NHTSA will initiate testing to examine this issue and anticipates proposing increasing the test speed for belted tests using the 5th percentile adult female dummy to 56 km/h (35 mph), beginning at the same time that the 50th percentile adult male is required to be used in belted testing at that speed.

NHTSA notes that Standard No. 208 previously specified the same maximum test speed for both belted and unbelted rigid barrier testing. The practical consequence of specifying the same test speed for both types of testing was to make unbelted testing the primary determinant of air bag designs. The reason for this is that, at the same test speed, the unbelted test is more difficult to pass than the belted test. Consequently, air bag designers typically focused their attention on performance in the 48 km/h (30 mph) unbelted test. After they optimized performance attributes for that test, they conducted belted tests to ensure that there were not any anomalies. Nothing in the Standard required, or had the effect of requiring, designers to optimize air bag performance for belted occupants.

Today's rule changes that. By specifying a maximum test speed for belted testing that is significantly higher that the maximum test speed for unbelted testing, Standard No. 208 will oblige occupant protection designers to focus separately on evaluating protection in both belted and unbelted testing as significant design factors, instead of having one type of testing serve simply as a check on the other. This is a major step forward for improving occupant protection for belted occupants. This step is in keeping with the agency's ongoing efforts in its Buckle Up America campaigns. It assures enhanced protection, especially for those 70 percent of occupants who currently wear their belts, and may help persuade those who do not wear their belts to do so.

B. Other Provisions of the Rule

Facilitation of low risk deployment technologies. In the Supplemental Notice of Proposed Rulemaking (SNPRM), we proposed that the low risk deployment requirements would have to be met for inflation levels at which air bags would deploy in rigid barrier crash tests at speeds up to 29 km/h (18 mph). 64 FR 60556; November 5, 1999. We also proposed that the injury criteria for the unbelted rigid barrier crash test would have to be met within the range between a minimum speed of 29 km/h (18 mph) and the maximum speed, inclusive. Some vehicle manufacturers responded that being required to test under the low risk deployment option for the inflation level (or levels) at which their air bags would deploy in crashes below 29 km/h (18 mph), combined with being required to protect unbelted dummies in crashes at 29 km/h (18 mph) and above, would limit design flexibility and discourage development of low risk deployment air bag systems. The manufacturers claimed that it is difficult with current sensors to design dual-stage air bags that could both meet the low risk deployment requirements *and* the barrier crash test injury criteria, particularly given the gray zone in which either a low level or high level deployment may occur.

To avoid inadvertently discouraging the development of low risk deployment technologies, we have decided that air bags with multiple inflation levels must meet the injury criteria for the low risk deployment tests for the inflation levels at which the air bags would be deployed in crashes of 26 km/h (16 mph) or below (with unbelted 5th percentile adult female dummies at both seating positions), instead of crashes of 29 km/h (18 mph) or below. However, if these air bags do not deploy at all in crashes of 26 km/h (16 mph) or below, the injury criteria must be met using the lowest level of inflation. We have also decided to raise the lower end of the range of speeds at which the unbelted rigid barrier crash test is conducted from 29 km/h (18 mph) to 32 km/h (20 mph). Together, these two changes are intended to facilitate use of the low risk deployment option by providing flexibility for the transition of dual-stage air bag systems from low level deployments designed to protect occupants in low speed crashes and not to injure out-of-position occupants in high level deployments designed to protect occupants from injuries in severe crashes.

Elimination of unneeded tests. In developing this rule, as in developing the SNPRM, we looked for opportunities to reduce the number and types of test configurations necessary to assure that future air bags minimize the risk of air bag-induced injuries.[17] We have made several further reductions.

We have dropped several test conditions for testing features (*e.g.,* weight or size sensor) that suppress the air bag when an infant or young child is present. We eliminated some test conditions because we concluded that they were inappropriate for testing this type of feature. The test conditions we dropped for this reason included an unrestrained RFCSS tipped forward onto the dashboard and the 3 year old and 6 year old dummies placed in the low risk deployment positions, *i.e.,* against the instrument panel.

The basic concept behind weight sensors or other features that suppress the air bag when an infant or young child is present is to automatically suppress the air bag unless weight or some other factor indicates that an older child or adult is present. In testing such a device, we believe it is appropriate to test for a variety of positions an infant or young child might likely be placed in by a parent or caregiver or that might likely be assumed by the child. The conditions we are dropping do not fall within this category, but are instead ones that might occur dynamically as a

[17] As noted above, when we issued the SNPRM, we reduced the number of proposed dynamic and static tests, especially those relating to the proposed requirements for reducing the risks of air bags. We reduced, from 14 to nine, N the number of proposed dynamic crash tests that would be applicable to all vehicles. We originally proposed that vehicles equipped with static air bag suppression systems (*e.g.,* weight sensors and pattern sensors) be subject to being tested with any child restraint manufactured over a ten-year period. This would have created the possibility of testing with any one of several hundred different models of child restraints. Recognizing that, we solicited comments to aid us in identifying a much more limited number of specific models that would be representative of the array of available child restraints. Based on the public comments, we proposed to require that vehicles be able to meet the applicable requirements when tested with any one of a far more limited number of child restraints representing a cross-section of the restraints currently on the market. We also significantly reduced the number of positions in which test dummies or child restraints could be placed for testing a static suppression system. This was accomplished largely by eliminating positions that were substantially similar to other positions.

result of pre-crash braking. However, since the air bag would already be automatically suppressed by this type of device in such a situation, we do not believe it necessary to test for these conditions.

We also proposed testing unrestrained rear-facing child seating systems (RFCSS) at any angle plus or minus 45 degrees from the vehicle seat's longitudinal plane. Because of difficulties in setting up the test and the unlikelihood that parents would place a RFCSS in an angled position, we have revised this test procedure to specify placement only at zero degrees of the longitudinal plane.

As proposed in the SNPRM, we have dropped the requirement for conducting oblique angle tests on vehicles using belted 5th percentile adult female dummies. We have adopted the proposal because we believe that if a vehicle can pass the perpendicular test with 5th percentile adult female dummies and the oblique tests with unbelted 50th percentile adult male dummies, it will also pass the oblique test using 5th percentile adult female dummies. Additionally, we have dropped the belted oblique angled tests for the belted 50th percentile adult male dummy. Given the unbelted oblique tests, we believe that the belted oblique angled tests are unnecessary.

New, more stringent injury criteria. In the rule, we have added a neck injury criterion and adopted a more stringent limit on chest deflection. The injury criteria are very similar to the ones we proposed in the SNPRM. The Nij approach to the risk of neck injury was generally accepted by the vehicle manufacturers, although they requested some modifications. We have made those modifications.

Due care provision. In the SNPRM, we proposed to maintain the ''due care'' provision for the existing crash test requirements and apply it to the new ones as well. However, we did not propose to apply the provision to test requirements that do not involve crashes, based on our belief that these tests are not affected by the variability associated with dynamically-induced dummy movement and/or vehicle deformation.

In this rule, we have decided against extending the due care provision to new crash tests, although it will still be available for vehicles that are not certified to the advanced air bag requirements. Our testing has indicated that manufacturers can easily meet the new injury criteria with 50th percentile adult male dummies in a 40 km/h (25 mph) unbelted test with existing air bag systems and should be able to make what ever improvements are needed to do so with 5th percentile adult female dummies without major uncertainties before they are required to certify any vehicle as meeting the advanced air bag requirements of this rule. Based on our experience with Standard No. 208 compliance activities, we do not believe there is an intrinsic need for a ''due care provision.'' Further, as we explained in the earlier notices in this rulemaking proceeding, the inclusion of such a provision in a safety standard does not fit very well with the overall statutory scheme.

Extended availability of air bag on-off switches. As proposed, we have decided to sunset the provisions which allow original equipment (OE) and retrofit on-off switches under specified circumstances. However, instead of sunsetting those provisions at the end of the TEA 21 phase-in period, as we proposed in the SNPRM, we are sunsetting them on September 1, 2012, two years after the end of the second phase-in. In response to a wide consensus among commenters, we have concluded that extending their availability to that date is desirable to ensure that consumers have had a chance to gain substantial experience with advanced air bag systems. This should ensure that confidence in those systems is strong enough by the sunset date to remove any desire for a manual on-off switch in vehicles produced with an advanced air bag.

Labels with strong warning messages. We have decided to adopt a new permanent sun visor label for vehicles certified as meeting the requirements of this rule. We proposed to alter the wording of the label to reflect the lower risk that will be associated with advanced air bags. However, all commenters, including the safety groups which supported a higher maximum test speed for the unbelted rigid barrier test, objected. They noted that while advanced air bags will significantly reduce the risk of death or serious injury, they will not eliminate all risk. Accordingly, we have decided that the new label should have warnings similar to those on the current label. The label will also have new graphics. In addition, we have adopted a new temporary label that states that the vehicle meets the new requirements for advanced air bags. Like the new permanent label, the new temporary label will have warnings similar to those on the current temporary one.

C. Future Rulemaking Plans

Final decision on maximum test speed for unbelted rigid barrier test. As noted above, we are planning a multi-year effort to obtain additional data to help resolve the issues and concerns relating to the maximum test speed for the unbelted rigid barrier test in the long run. Those activities are described in the section below entitled, ''Monitoring of Implementation and Field Experience; Research and Technology Assessment.'' Based on the results of those information gathering and analysis efforts, we will make a final decision regarding the maximum test speed for unbelted dummy testing in the long run, after providing an opportunity for informed public comment.

New rulemaking proposals. NHTSA plans to issue several proposals for further improvements in frontal occupant crash protection. One proposal would be to increase the maximum speed for the belted rigid barrier test using the 5th percentile adult female from 48 km/h to 56 km/h (30 to 35 mph). That proposal would bring the top speed for belted testing with the 5th percentile adult female dummies into line with the top speed for belted testing with the 50th percentile adult male dummies adopted in this rule. To provide data to support that proposal, we plan to initiate testing with the 5th percentile adult female in 56 km/h (35 mph) belted tests. We anticipate that if this proposal were adopted as a final rule, implementation would begin during the second stage phase-in established by today's rule. Because 56 km/h (35 mph) is the same speed at which we currently conduct our New Car Assessment Program (NCAP) frontal crash tests using belted 50th percentile adult male dummies, we will ask also for public comments on what adjustments, if any, we should make to the frontal NCAP test program.

Another proposal would be to adopt a high speed belted offset deformable barrier test. The addition of this test to Standard No. 208 would lead to improved vehicle structure, improved occupant compartment integrity and thus reduced injuries due to intrusion. This would benefit both belted and unbelted occupants. We submitted a first status report on this initiative to Congress in April 1997, and will submit a second one this spring. We expect to issue the proposal later this year.

NHTSA is also developing proposals for adding additional test dummies to Part 572 of Title 49 CFR. The two dummies that are furthest along in their development are a dummy representing a 10-year-old child and a dummy representing a 95th percentile adult male.

D. Monitoring of Implementation and Field Experience; Research and Technology Assessment

To promote the achievement of the goals of this rule and to obtain additional data that will aid us in making a final decision about the maximum test speed that should be specified for the unbelted rigid barrier test, we are planning a multi-year effort to obtain additional data.[18] This effort will include a variety of activities. We will continue to gather and evaluate real-world crash data to monitor the effectiveness of redesigned and advanced air bags in protecting various groups and subgroups of occupants and in preventing air bag-induced deaths and injuries. We are going to continue our research program, including conducting unbelted barrier tests of current vehicles at various speeds, including 48 km/h (30 mph), and analyzing those test results. In that way, we can assess how well the manufacturers simultaneously preserve and improve protection for all occupants, belted and unbelted, and minimize risk. Further, we need to continue our research and testing regarding advanced air bag technologies to gain an understanding of the safety performance implications of various features of air bag design. In addition, we will prepare an annual ''compliance margins'' report to assess the extent to which vehicle manufacturers exceed the 40 km/h (25 mph) test requirement.

III. Our Proposals for Advanced Air Bags

A. Our Initial Proposal (September 1998)

Pursuant to TEA 21, on September 18, 1998, we published in the **Federal Register** (63 FR 49958) a notice of proposed rulemaking (NPRM) to upgrade Standard No. 208 to require vehicles to be equipped with advanced air bags that meet new, more rigorous performance requirements. The NPRM proposed to require advanced air bags in some new passenger cars and light trucks beginning September 1, 2002, and in all new cars and light trucks beginning September 1, 2005.

We proposed several new performance requirements to ensure that the advanced air bags do not pose unreasonable risks to out-of-position occupants. The NPRM gave options for complying with those requirements so that vehicle manufacturers would be free to choose from a variety of effective technological solutions and to develop new ones if they so desire. With this flexibility, they could use either technologies that modulate or otherwise control air bag deployment so deploying air bags do not cause serious injuries or technologies that prevent air bag deployment if children or out-of-position occupants are present, or both.

To ensure that the new air bags are designed to avoid causing injury to a broad array of occupants, we proposed test requirements using a family of dummies, including ones representing 12-month-old, 3-year-old and 6-year-old children, and 5th percentile adult females, as well as tests representing 50th percentile adult males. We noted that many of the proposed test procedures were new, and specifically requested comments about their suitability for measuring the performance of the various advanced systems under development.

We also proposed requirements to ensure that the new air bags are designed to protect an array of belted and unbelted occupants, including teenagers and small adults. The standard's current crash test requirements specify the use of 50th percentile adult male dummies only. We proposed also to specify the use of 5th percentile adult female dummies in crash tests. The weight and size of these dummies are representative of not only small women, but also many teenagers. By testing with both the 50th percentile adult male dummy and the 5th percentile adult female dummy, we can address the risks faced by most of the entire adult female population and much of the adult male population.[19]

In addition to the existing rigid barrier test, representing a relatively ''stiff'' or ''hard'' pulse crash when conducted perpendicularly, and a more moderate pulse crash when conducted obliquely, we proposed to add a deformable barrier crash test, representing a relatively ''soft'' pulse crash. This proposed new soft pulse crash test requirement was intended to ensure that air bag systems are designed so that they do not deploy too late. Some current air bags deploy relatively late in certain types of crashes, such as pole impacts. If an air bag deploys too late, normally seated occupants may move too close to the air bag before it starts to inflate. In such a situation, the air bag is less likely to protect the occupant and more likely to pose a risk to the occupant. We proposed to use belted 5th percentile adult female dummies in this test because small adults sit farther forward than larger adults and thus represent a greater challenge for restraint system design.

We also proposed to phase out the unbelted sled test option as we phased in requirements for advanced air bags. We acknowledged that the sled test option has been an expedient and useful temporary measure that enabled the manufacturers to speed up the redesigning all of their air bags to reduce risks. The sled test also helped to ensure that protection would continue to be provided by air bags in high-speed crashes. Nevertheless, we stated that sled testing was not a fully satisfactory means of assessing the extent of occupant protection that a vehicle and its air bag together will afford occupants in the real world and thus was not suitable in the long run.

Finally, we proposed new and/or upgraded injury criteria for each of the proposed new test requirements, and also proposed to upgrade some of the injury criteria for the standard's existing test requirements.

B. Our Supplemental Proposal (November 1999)

We received comments on the September 1998 NPRM from a wide range of interested persons including vehicle manufacturers, air bag manufacturers, insurance companies, public interest groups, academia, and government agencies. Commenters expressed widely differing views as to how to accomplish the goals mandated by TEA 21— improving the benefits of air bags, while minimizing risks from air bags.

On November 5, 1999, in response to the public comments on our 1998 NPRM and to other new information we obtained after issuing that proposal, we published the SNPRM (64 FR 60556), which updated and refined the amendments under consideration in this rulemaking.

In the SNPRM, we reiterated the goals set for us by Congress in TEA 21, *i.e.,* to improve occupant protection for occupants of different sizes, belted and unbelted, while minimizing the risk to infants, children, and other occupants from injuries and deaths caused by air bags. Further, we emphasized the need to ensure that the needed improvements in occupant protection were made in accordance with the statutory implementation schedule.

In developing the SNPRM, we sought to reduce the number of proposed tests to the extent possible without

[18] NHTSA would welcome the help of interested persons in gathering data useful in achieving these purposes. The agency notes that the Alliance of Automobile Manufacturers has offered to gather information on how people die in high speed crashes.

[19] A 95th percentile adult female, on average, weighs 199 lb and stands 5′7″ tall. The 50th percentile adult male dummy weighs 171 lb and stands 5′9″ tall.

significantly affecting the benefits of the NPRM. We were persuaded by the commenters that reducing the amount of testing was important, given the costs to manufacturers (and ultimately consumers) associated with certifying vehicles to such a large number of new test requirements. At the same time, we wanted to be sure that the final rule would include sufficient tests to ensure that air bags would meet the goals of TEA 21. Given the continued debate over what requirements should be relied upon to ensure protection to unbelted occupants, we also wanted to be sure that we received and considered public comments on the various alternative approaches reflecting the more recent views and information available to us.

The most significant differences between the NPRM and the SNPRM can be summarized as follows:

• *Two alternative unbelted test procedures.* While we proposed one unbelted test procedure in the NPRM, an up-to-48 km/h (30 mph) rigid barrier test using the 50th percentile adult male dummy and the 5th percentile adult female dummy, we proposed and sought comments on two alternative unbelted test procedures in the SNPRM.

The first alternative was an unbelted rigid barrier test whose injury criteria would have to be met within the range of a minimum speed of 29 km/h (18 mph) and a maximum speed to be established between 40 to 48 km/h (25 to 30 mph), inclusive. Within this alternative was the potential for a phase-in sequence in which the maximum speed would initially be set at 40 km/h (25 mph) to provide vehicle manufacturers additional flexibility when they are introducing advanced air bags during the phase-in. Under this phase-in sequence, the final rule could provide that the maximum speed would return to 48 km/h (30 mph) after some period of time. We also sought comment on setting the maximum speed at 48 km/h (30 mph) but temporarily permitting relaxed injury criteria performance limits (*e.g.* 72 g chest acceleration limit instead of 60 g chest acceleration limit) in rigid barrier crashes between 40 km/h (25 mph) and 48 km/h (30 mph).

The second alternative was an unbelted offset deformable barrier test within the range of a minimum speed of 35 km/h (22 mph) and a maximum speed to be established within the range of 48 to 56 km/h (30 to 35 mph). The latter alternative was developed in response to a recommendation made by IIHS in its comment on the NPRM.[20]

We proposed the 29 and 35 km/h (18 and 22 mph) lower ends of the ranges of test speeds for the two alternatives because we wanted to be sure that the standard would not inadvertently create incentives to push deployment thresholds downward; *i.e.,* cause air bags to be deployed at lower speeds.

• *Possible higher speed belted rigid barrier test.* We stated that if we reduced the maximum speed of the unbelted rigid barrier test to 40 km/h (25 mph), we might also increase the maximum speed of the belted rigid barrier test from the current 48 km/h to 56 km/h (30 to 35 mph) and use both 5th percentile adult female and 50th percentile adult male dummies.

• *Reduced number of tests.* In the SNPRM, we significantly reduced the total number of proposed tests as compared to the NPRM. In a number of situations, we tentatively concluded that a proposed test could be deleted because the performance we sought to secure by means of that test would largely be assured by one or more of the other tests.

• *Reduced offset testing.* The proposed up-to-40 km/h (25 mph) offset crash test using belted 5th percentile adult female dummies would be conducted only with the driver side of the vehicle engaged, instead of both testing with the driver side engaged and separately testing with the passenger side engaged.

• *Ensuring that certain static suppression systems can detect real children and adults.* For our proposed static test requirements for systems which suppress air bags in the presence of infants and children (*e.g.,* weight sensors), we proposed a new option which would permit manufacturers to certify to requirements referencing actual children, instead of 3-year-old and 6-year-old child dummies, in a stationary vehicle to test the suppression systems. (This option would not apply to systems designed to suppress the air bags only when an infant is present.) Adult human beings could also be used in the place of 5th percentile adult female dummies for the portions of those static test requirements which make sure that the air bag is activated for adults. Steps would be taken to ensure the safety of all subjects used for these tests, *e.g.,* by turning off the air bags.

• *Reduced number of child restraints used for testing suppression systems.* Instead of requiring manufacturers to assure compliance of a vehicle in tests using any child restraint which was manufactured for sale in the United States any time during a specified period prior to the manufacture of the vehicle, we proposed to require them only to assure compliance using each child restraint on a relatively short list of specified child restraint models. Those models would be chosen to be representative of the array of available child restraints. The list would be updated from time to time to reflect changes in the types of available child restraints.

• *Modified requirements for systems that suppress the air bag for out-of-position occupants.* We significantly modified the proposed requirements for systems that suppress the air bag when an occupant is out of position during a crash. In the NPRM, we proposed a single test procedure for all types of such suppression systems. However, we were persuaded by the commenters that the proposed test procedure was not appropriate for many of the systems that are currently under development. Because we did not have sufficient information or prototype hardware to develop a new test procedure, and because no single test procedure may be appropriate for the broad spectrum of suppression technologies currently being developed, we proposed a provision that would permit manufacturers or others to petition the agency to establish technology-specific test procedures under an expedited rulemaking process.

• *No full scale dynamic out-of-position test requirements.* We eliminated from this rulemaking the proposed option for full scale dynamic out-of-position test requirements (the option which included pre-impact braking as part of the test procedure). We were persuaded by the commenters that the proposed test procedure was not workable at this time. Moreover, we concluded that this option was unnecessary at this time, since other options were available for the range of effective technologies we understand to be currently under development.

In developing the SNPRM, we carefully considered all of the comments we received in response to the NPRM. Moreover, because the SNPRM differed significantly in many aspects from the NPRM, we explained that we did not contemplate any further consideration of the comments on the NPRM in developing the final rule. We stated that if any persons believe that we did not adequately consider particular issues raised in comments on the NPRM, they should raise those

[20] We noted that IIHS's views had changed since making that recommendation. Its changed views were discussed in the SNPRM.

issues again in commenting on the SNPRM.

Accordingly, in developing today's final rule, we have focused our consideration on the comments submitted in response to the SNPRM.

IV. Public Comments on the Supplemental Proposal

As in the case of the NPRM, we received comments on the November 1999 SNPRM from a wide range of interested persons including vehicle manufacturers, air bag manufacturers, insurance companies, public interest groups, and government agencies. In this section, we provide a general summary of those comments. A more detailed description of the comments is provided below in the sections which address the issues raised by commenters, and in the Final Economic Assessment and three separate technical papers which are being placed in the public docket.

Improving the Protection of Unbelted Occupants in Serious Crashes

Nearly all commenters supported the unbelted rigid barrier test over the unbelted offset deformable barrier test.

Vehicle manufacturers stated that the rigid barrier test is practicable and repeatable and does not entail the variability associated with deformable barriers and the kinematics of an offset test. They also stated that the European barrier used in the offset test is not appropriate for testing larger SUVs and light trucks.

The Center for Auto Safety (CAS) stated that the unbelted offset test holds promise as a supplemental test, but is not yet suitable for inclusion in Standard No. 208. That organization stated that there are currently insufficient data to allow for a comprehensive analysis of the consequences that would accompany the adoption of the offset test.

Some other commenters also argued that an unbelted offset test offers promise for the future, either as a replacement for the rigid barrier test or as a supplemental test.

While a near-consensus of commenters supported adoption of an unbelted rigid barrier test, there was sharp disagreement over the maximum speed for that test. The vast majority of commenters, including all auto companies and all air bag suppliers, the Insurance Institute for Highway Safety (IIHS), and the National Transportation Safety Board (NTSB) supported a maximum speed of 40 km/h (25 mph). Safety groups including Public Citizen, CAS, Consumers Union, and Parents for Safer Air Bags (Parents) supported returning to 48 km/h (30 mph).

The primary arguments made by those commenters supporting a maximum speed of 40 km/h (25 mph) can be summarized as follows:

- Current redesigned air bags work well.
- There has been no loss in benefits.
- There is no reason to believe that manufacturers would reduce air bag effectiveness in the future under a 40 km/h (25 mph) maximum test speed.
- A 40 km/h (25 mph) test speed allows flexibility to design air bags for all occupants.
- A return to a 48 km/h (30 mph) test speed would require a return to overly aggressive air bags.
- Aggressive air bags cause deaths in high speed crashes as well as low speed crashes.
- A 48 km/h (30 mph) test speed could result in disbenefits in low speed crashes.
- There are significant technological challenges in meeting a 48 km/h (30 mph) requirement for both the 50th percentile adult male dummy and the 5th percentile adult female dummy.
- Advanced technologies are not currently available that address aggressivity and practicability problems.

The primary arguments made by those commenters supporting a maximum test speed of 48 km/h (30 mph) can be summarized as follows:

- A maximum test speed of 48 km/h (30 mph) will result in higher benefits than a test speed of 40 km/h (25 mph).
- Half of all fatalities in frontal crashes occur at a delta V above 48 km/h (30 mph); a maximum test speed of 48 km/h (30 mph) represents significantly more potentially fatal crashes than a test speed of 40 km/h (25 mph).
- In NHTSA tests, almost all vehicles with redesigned air bags passed the 48 km/h (30 mph) rigid barrier test with the 50th percentile adult male dummy, implying that a return to a 48 km/h (30 mph) test speed would not require a return to overly aggressive air bags.
- Advanced technologies can be used to enable all vehicles to meet requirements for high speed protection and risk reduction.
- There is no justification to reduce the test speed to 40 km/h (25 mph).
- A 40 km/h (25 mph) test speed would not encourage use of advanced technologies.
- A 40 km/h (25 mph) test speed would be inconsistent with the TEA 21 requirement to improve protection for unbelted occupants.
- The increase of the belted test speed to 56 km/h (35 mph) would not recover lives lost as a result of reducing the unbelted test speed to 40 km/h (25 mph).

While maximum speed was the most controversial issue concerning the unbelted test, commenters raised other issues as well. Some vehicle manufacturers objected to the proposal to test over a range of speeds from 29 km/h (18 mph) to the highest speed. They argued that being required to meet test requirements to ensure protection beginning at 29 km/h (18 mph), combined with the proposal to test under the low risk deployment option for inflation level (or levels) that would be deployed in crashes below 29 km/h (18 mph), would limit design flexibility and discourage development of low risk deployment air bag systems.

Another significant issue addressed by commenters concerned the seating procedure for the 5th percentile adult female dummy. Vehicle manufacturers objected to the proposal to test with the seat in the full forward position. They argued that occupants, including small females, rarely if ever sit in that position. They also argued that adoption of this position could result in consequences such as smaller, less protective air bags, and reduced ingress/egress space for rear passengers.

Several safety advocacy groups argued in favor of testing with the seat in the full forward position. They argued that some occupants sit in that position and that it is necessary to test in the ''worst case'' condition.

Improving the Protection of Belted Occupants in Serious Crashes

Commenters supported our proposal to add the 5th percentile adult female dummy to the existing 48 km/h (30 mph) belted rigid barrier test.

Most supporters of a 40 km/h (25 mph) unbelted rigid barrier test, including most vehicle manufacturers, also supported increasing the maximum speed of the belted rigid barrier test to 56 km/h (35 mph). However, these commenters urged that the 56 km/h (35 mph) belted rigid barrier test be phased in after the TEA 21 phase-in period. They also urged that the higher speed test initially be conducted only with the 50th percentile adult male dummy, and that a separate rulemaking be initiated to consider whether the 5th percentile adult female dummy should be tested at that speed.

Most commenters also supported our proposal to add the up-to-40 km/h (25 mph) offset deformable barrier test using belted 5th percentile adult female dummies. Some of these commenters, however, urged that an out-of-position test for the passenger side be developed as an alternative to the test.

DaimlerChrysler opposed adoption of this test, arguing that the European barrier used in the test is not appropriate for testing heavier vehicles such as SUVs and light trucks.

Some commenters expressed concerns that our proposal would result in there being too many crash tests in Standard No. 208, and requested that we reconsider whether all of the proposed tests are needed.

Minimizing the Risk of Injuries and Deaths Caused by Air Bags

Commenters supported the basic approach of our proposed requirements to minimizing the risk of injuries and deaths caused by air bags, including providing a variety of testing options that account for the kinds of effective technological solutions that are under development.

Vehicle manufacturers argued that some of the test conditions specified for the proposed static suppression tests, including the range of seat back angles and seat track positions, would make the tests impracticable.

Some commenters emphasized that we need to allow manufacturers to use both suppression and low risk technologies. As noted earlier, some commenters argued that adjustments need to be made in both the unbelted rigid barrier test requirements and in the requirements for the low risk deployment option to avoid limiting use of the low risk deployment option.

Commenters were generally supportive of our proposal to permit manufacturers to certify to requirements referencing human beings in a stationary vehicle to test suppression systems, so long as steps are taken to ensure the safety of all subjects used for testing.

Other Issues

Commenters generally supported the proposed injury criteria and associated performance limits, although vehicle manufacturers recommended some changes.

We received numerous comments raising specific technical issues concerning how dummies are to be positioned for the various tests.

Commenters generally argued that current provisions allowing manual on-off switches for air bags under certain circumstances should remain in effect for a longer period of time, and a number of commenters argued that existing warning labels should not be weakened or eliminated at this time.

There was also significant differences of opinion regarding our proposals about the provision providing a due care defense against findings of noncompliance with the air bag requirements of Standard No. 208.

Several commenters raised concerns about possible unforeseen consequences resulting from the use of advanced air bag technologies.

We received several comments expressing concern about the potential impacts of this rulemaking on small businesses.

V. Diagrams of the Final Rule Requirements

After carefully considering the comments, we have decided to issue a final rule along the lines of the SNPRM. The key differences between the SNPRM and the final rule are discussed earlier and will not be repeated here. The test requirements to improve occupant protection for different size occupants, belted and unbelted, and to minimize risks to infants, children, and other occupants from injuries and deaths caused by air bags, are shown in Figures 1 and 2 below.

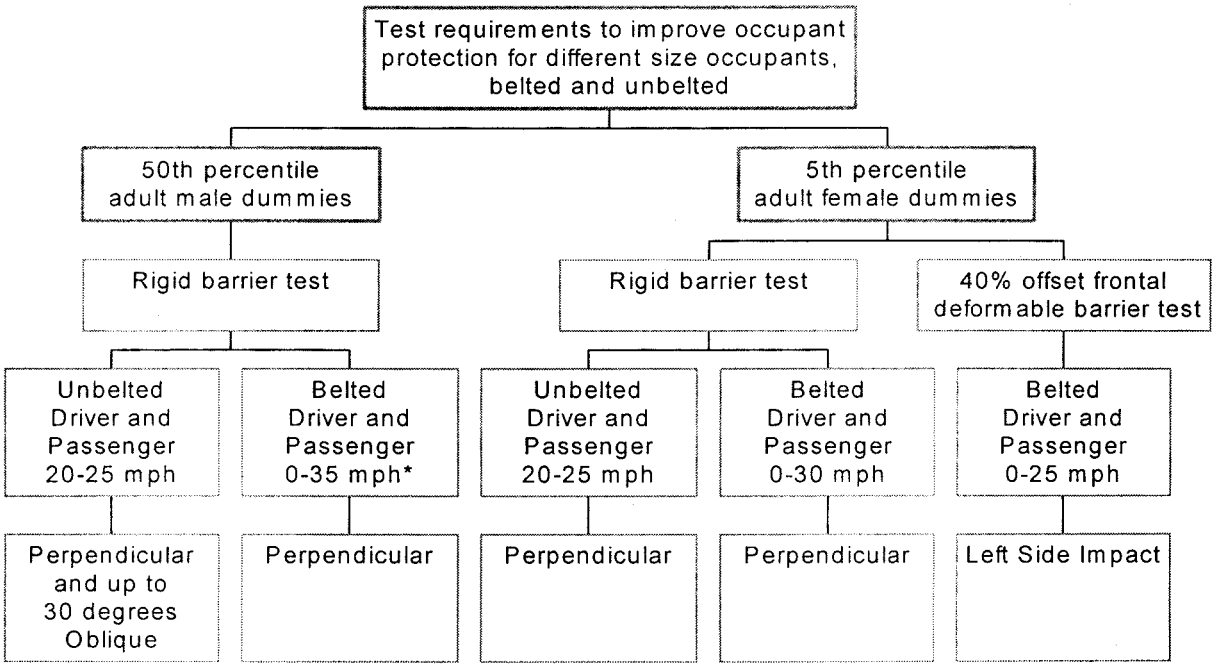

*Range is 0-30 mph during first stage of the phase-in of the final rule

Figure 1

Test Requirements to Improve Occupant Protection for Different Size Occupants, Belted and Unbelted

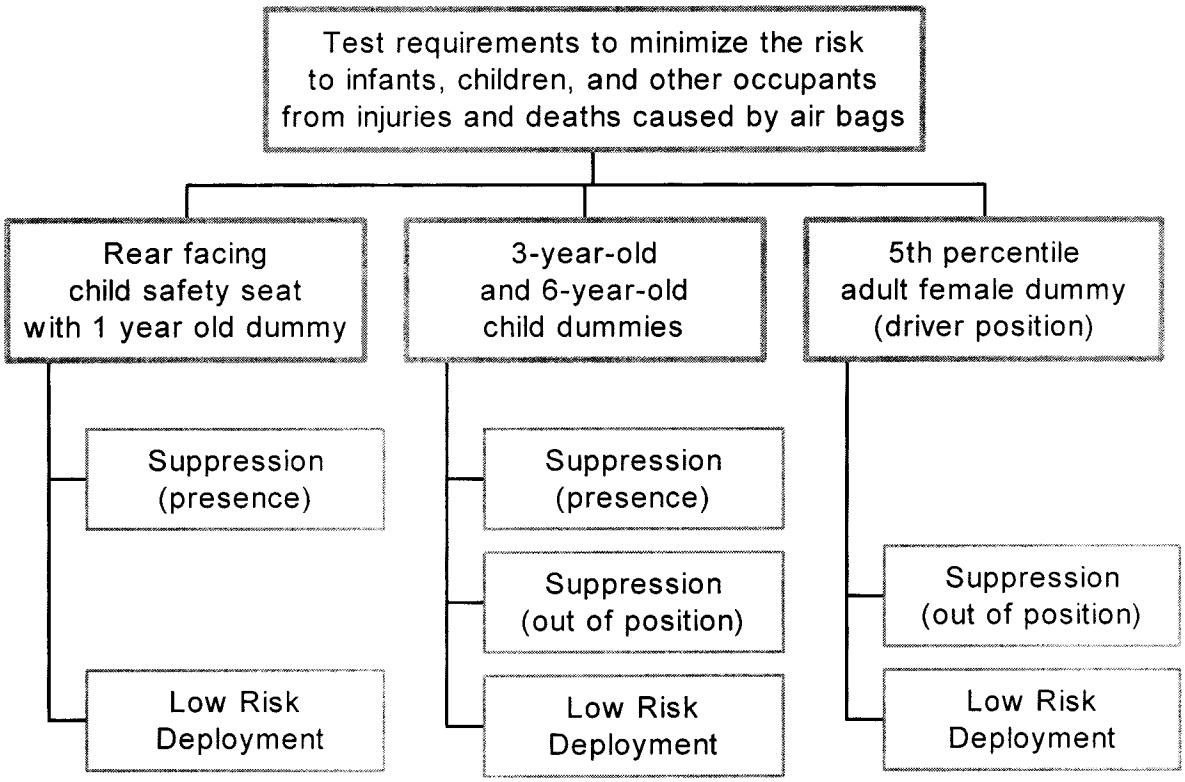

Figure 2

Test Requirements to Minimize the Risk to Infants
Children and Other Occupants from Injuries
And Deaths Caused by Air Bags

BILLING CODE 4910–59–P

VI. Improving the Protection of Unbelted Occupants in Serious Crashes

A. Summary of Proposed Requirements

In the SNPRM, we proposed to phase out the unbelted sled test option as the requirements for advanced air bags are phased in. As explained below, sled tests have inherent limitations as compared to crash tests in measuring occupant protection.

We explained that, unlike a full scale vehicle crash test, a sled test cannot measure the actual protection an occupant will receive in a crash. We noted that while the current sled test measures some performance attributes of the air bag, it cannot measure the performance provided by the vehicle structure in combination with the air bags or even the full air bag system by itself. We also noted that the sled test does not evaluate the actual timing of air bag deployment (*e.g.,* crash sensors), does not replicate the actual crash pulse of a particular vehicle model, does not measure the potential for harm from vehicle components that are pushed back into the occupant compartment during a crash, and does not measure how a vehicle performs in angle crashes.

The purpose of the sled test option was to make it easier for vehicle manufacturers to make quick changes to their air bags to reduce risks to out-of-position occupants. Vehicle manufacturers could not immediately incorporate advanced technologies in their vehicles, and the sled test facilitated the process of quickly certifying large numbers of vehicles with redesigned air bags to Standard No. 208. We believe the sled test has been useful as a short-term measure. Over the longer time frame, however, we believe that a better test is needed to ensure the protection of unbelted occupants.

To replace the sled test, we proposed two alternative unbelted crash test procedures: an unbelted rigid barrier test and an unbelted offset deformable barrier test. We proposed that the unbelted rigid barrier test be conducted perpendicular and up to ± 30 degrees oblique to perpendicular with 50th percentile adult male dummies, but perpendicular only in tests with 5th percentile adult female dummies. The injury criteria would have to be met within the range of a minimum speed of 29 km/h (18 mph) and a maximum speed to be established within the range of 40 to 48 km/h (25 to 30 mph). This alternative was based on the unbelted crash test that has been part of Standard No. 208 for many years but which has, as a practical matter, been temporarily superseded by the sled test option since March 1997. The barrier test represents a vehicle striking a vehicle of the same size, weight and structure head on at the same speed.

We indicated that within this first alternative, the potential existed for a phase-in sequence in which the maximum speed would temporarily be set at 40 km/h (25 mph) to provide vehicle manufacturers additional flexibility when they are introducing advanced air bags during the TEA 21 phase-in. Under this approach, the final rule could provide that a maximum speed of 48 km/h (30 mph) would apply after that period. We also indicated that if we were to reduce the maximum speed to 40 km/h (25 mph), we might also increase the maximum speed of the belted rigid barrier test from the current 48 km/h to 56 km/h (30 to 35 mph).

We proposed that the second alternative procedure, the unbelted offset deformable barrier test, would be conducted using both 50th percentile adult male dummies and 5th percentile adult female dummies, with a minimum speed of 35 km/h (22 mph) and a maximum speed to be established within the range of 48 to 56 km/h (30 to 35 mph). This alternative was based on a type of crash test used by IIHS and by Europe, except that unbelted dummies would be used.

For both alternatives, we proposed to conduct the crash tests with 50th percentile adult male dummies with the seat in the middle seat track position. However, we proposed in the SNPRM to conduct tests using 5th percentile adult female dummies with both the driver and passenger seats in the full forward position. We tentatively selected this position because some small adults sit there and because we believe that air bags should protect those people.

We noted, however, that placement of the 5th percentile adult female dummy in the full forward position tests the occupant restraint system under a condition that may not generally occur in the real world. The University of Michigan Transportation Research Institute (UMTRI) conducted a study in which it concluded that even drivers who are approximately the same size as the 5th percentile adult female dummy generally do not sit in the full forward seat track position (Docket No. NHTSA–1998–4405–69). Also, while some short-statured drivers might need to move the driver's seat all the way forward to reach the controls, a passenger in the front passenger seat would be less likely to have a similar need. Another concern was whether, in order to meet tests for conditions that rarely occur in the real world, manufacturers might select air bag designs that offer reduced protection for conditions that are more common in the real world. Accordingly, we requested comments on whether testing the 5th percentile adult female dummy with the seat in something other than the full forward seat track position would adequately protect properly-seated individuals of all sizes while potentially allowing more design freedom.

B. Type of Test

Commenters that previously advocated retention of the sled test indicated a willingness to accept the unbelted rigid barrier test. No commenters disputed the inherent limitations of sled tests as compared to crash tests. Nearly all commenters supported the unbelted rigid barrier test over the unbelted offset deformable barrier test. However, as discussed in the next section, the commenters that had previously supported the sled test wanted the maximum speed of the unbelted barrier test reduced to 40 km/h (25 mph).

Vehicle manufacturers stated that the rigid barrier test is practicable and repeatable and does not entail the variability associated with deformable barriers and the kinematics of an offset test. They also stated that the European barrier used in the offset test is not appropriate for testing larger SUVs and light trucks. Several vehicle manufacturers, including GM, Honda and DaimlerChrysler, stated that a high speed unbelted offset test would pose problems for vehicle sensor systems.

CAS stated that the unbelted offset test holds promise as a supplemental test, but is not yet suitable for inclusion in Standard No. 208. That organization stated that there are currently insufficient data to allow for a comprehensive analysis of the consequences that would accompany the adoption of the offset test.

Several other commenters also argued that an unbelted offset test offers promise for the future, either as a replacement for the rigid barrier test or as a supplemental test. Ford stated that although not practicable during the TEA 21 phase-in period, it believes that a 48 km/h (30 mph) offset test potentially represents a better long-term approach for enhancing unbelted protection.

Parents stated that the final rule should include both the unbelted rigid barrier test and the unbelted offset test. That organization argued that the two tests provide distinct means of ensuring protection in very different circumstances, and that inclusion of both tests is necessary in order to ensure adequate protection for unbelted occupants.

After considering the comments, we have decided to adopt the unbelted rigid barrier test to ensure protection for unbelted occupants in serious crashes. This is the unbelted crash test included in Standard No. 208 for the past 30 years. We also use a belted rigid barrier test for Standard No. 208 and our New Car Assessment Program (NCAP). Detailed information about this type of test is presented in a paper prepared by our Office of Research and Development titled ''Updated Review of Potential Test Procedures for FMVSS No. 208.'' That paper was prepared to accompany our SNPRM.[21]

We note that we sought comment in the SNPRM on the unbelted offset test principally to ensure that we received the benefit of public comments on all of the various alternative approaches that are available at this time. In the NPRM, we indicated that while we believed the unbelted rigid barrier test was a good approach, we were also willing to consider alternative unbelted crash tests. The only alternative unbelted crash test advocated by a commenter that could realistically be implemented within the time frame of this rulemaking was the offset deformable barrier test.

However, the commenter that originally suggested consideration of the unbelted offset test, IIHS, withdrew its support before the SNPRM was published. No commenter on the SNPRM supported adopting the unbelted offset test instead of the unbelted rigid barrier test.

As to Parents' recommendation that we adopt both unbelted tests, we believe that adoption of the proposed unbelted high speed offset test would be inappropriate at this time. We have scant data on the repeatability of this test. Nearly all the offset testing to date has used belted dummies. As noted above and also discussed in the SNPRM, several manufacturers have raised concerns that the proposed high speed unbelted offset test would pose problems for vehicle sensor systems. See 64 FR 60579.

We also note that while we agree with Parents that the two high speed tests provide distinct means of ensuring protection in different circumstances, this does not mean that adoption of those particular two tests would be needed to ensure protection in those different circumstances. We believe that the combination of an unbelted rigid barrier test and *belted* offset tests can accomplish the same purpose.

As discussed in the SNPRM, the high speed unbelted rigid barrier test and the high speed unbelted offset test are significantly different, and each has potential advantages as compared to the other. The two principal advantages of an offset test are that it provides a more challenging test of vehicle crash sensors and of vehicle structure. However, these areas of performance are addressed by belted offset tests as well as unbelted offset tests.

As discussed later in this document, we are adopting an up to 40 km/h (25 mph) belted offset deformable barrier test as part of today's final rule. This test will help ensure improved sensing systems, which will benefit both belted and unbelted occupants. We are also separately pursuing our previously-announced plans to consider adding a high speed belted offset test to Standard No. 208. This test would help ensure improved vehicle structure and reduced intrusion injuries, again benefitting both belted and unbelted occupants. Because the combination of an unbelted rigid barrier test and belted offset tests (either being adopted today or currently being considered by the agency for rulemaking) can accomplish the same purpose as an unbelted offset test, we do not currently plan to consider further adopting an unbelted offset test.

C. Agency Decision to Establish Maximum Speed at 40 km/h (25 mph)

1. The Supplemental Proposal

In the SNPRM, we proposed that the maximum speed for the unbelted rigid barrier test be established within the range of 40 to 48 km/h (25 to 30 mph).

We stated that it was our intent to maximize, to the extent consistent with TEA 21, the protection that air bags offer in crashes potentially resulting in fatal injuries. Thus, we stated that it was our preference to establish such a test requirement at as high a severity as practicable. We stated that the 40 km/h (25 mph) lower end of the maximum test speed range was set forth for comment to ensure that commenters addressed a crash test recommended by AAM in late August 1999.

We also stated that the potential existed for a phase-in sequence in which the maximum speed would initially be set at 40 km/h (25 mph) to provide vehicle manufacturers additional flexibility when they are introducing advanced air bags during the phase-in. We explained that under this phase-in sequence, the final rule could provide that a maximum speed of 48 km/h (30 mph) would apply after a reasonable period of time.

We noted that, in commenting on the NPRM, the commenters opposing the 48 km/h (30 mph) unbelted barrier test had raised two primary issues. First, they argued that the test is not representative of typical crashes. Second, they argued that returning to this test would prevent continued use of ''depowered'' air bags and would require a return to ''overly aggressive'' air bags.

We addressed each of these issues in the SNPRM. As to whether the test is representative of typical crashes, we stated that because the purpose of Standard No. 208 is primarily to reduce serious and fatal injuries, we believed that the relevant question is how representative the test is of the crashes that produce those injuries. We presented data from the National Automotive Sampling System (NASS) for years 1993–1997 showing, among other things, that about 50 percent of fatalities in frontal crashes occur at delta Vs below 48 km/h (30 mph), and about 50 percent occur at delta Vs above 48 km/h (30 mph). Looking separately at unbelted and belted occupants, we noted that 51 percent of the fatalities involving unbelted occupants and 47 percent of the fatalities involving belted occupants occur in frontal crashes at delta Vs below 48 km/h (30 mph). We noted that the delta V in NASS represents the speed at which the vehicle would strike a rigid barrier to duplicate the amount of energy absorbed in the crash. Thus, about half of fatalities in frontal crashes occur in crashes that are more severe than a 48 km/h (30 mph) rigid barrier crash, and half of all frontal crash fatalities occur in crashes that are less severe than a 48 km/h (30 mph) rigid barrier crash.

Given that Standard No. 208's unbelted crash test requirements are intended to save lives, we stated that we disagree that 48 km/h (30 mph) rigid barrier crashes are unrepresentative of the kinds of crashes in which we are seeking to ensure protection. We also noted that because we were proposing to require vehicles to meet the unbelted test requirements for a range of speeds up to and including 48 km/h (30 mph), we were addressing protection for lower severity crashes as well as higher severity crashes.

As to the argument that returning to the unbelted 48 km/h (30 mph) rigid barrier test would prevent continued use of ''depowered'' air bags and require use of ''overly aggressive'' air bags, we stated that a key way of assessing the validity of the argument that a return to the 48 km/h (30 mph) barrier test would—at least in the absence of additional technological improvements—prevent continued use

[21] One commenter, DaimlerChrysler, submitted a critique of that paper as part of its comments. We are placing in the docket an addendum to the paper which responds to that critique.

of redesigned air bags was to test vehicles with those air bags in 48 km/h (30 mph) barrier tests and see how they perform. We noted that we had tested a total of 13 MY 1998–99 vehicles with redesigned air bags in a perpendicular rigid barrier crash test at 48 km/h (30 mph) with unbelted 50th percentile adult male driver and passenger dummies. The vehicles represented a wide range of vehicle types, sizes, and crash pulses.[22]

We stated that 11 of the 13 vehicles passed the injury criteria performance limits proposed in the SNPRM. For the driver position, 12 of the 13 vehicles passed all the relevant injury criteria performance limits. In the one vehicle with a failure, the MY 1999 Acura RL, the driver dummy exceeded the femur load criteria. For the passenger position, 12 of the 13 vehicles also passed all of the relevant injury criteria performance limits. The MY 1998 Dodge Neon slightly exceeded the 60 g chest acceleration limit (with a value of 61.4 g). The other proposed injury criteria performance limits (*i.e.,* for HIC, chest deflection, and Nij) were easily met in all the tests; for most vehicles, there was a greater than 20 percent margin of compliance for both the driver and passenger seating positions.

Based on these test results, we stated that the tested vehicles with redesigned air bags, ranging widely in vehicle type and size, appeared to continue to meet Standard No. 208's 48 km/h (30 mph) unbelted rigid barrier test requirements for 50th percentile adult male dummies, many of them by wide margins.

We also noted that the relevant issue for this rulemaking is not whether some MY 1998–99 vehicles with redesigned, single-inflation level air bags would not meet a 48 km/h (30 mph) unbelted barrier test requirement. The more relevant issue is whether vehicles to be manufactured in MY 2003 and later would be able to comply with such a requirement, perhaps by means of currently available technologies not in many air bag systems as well as technologies still being or yet to be developed.

We explained that today's air bag systems are not advanced air bags and thus do not respond to factors such as crash severity, occupant weight and occupant location. By contrast, the incorporation of advanced technologies would make air bag systems responsive to those factors.

We also noted:

> If a manufacturer decided to use a somewhat more powerful air bag to meet a 48 km/h (30 mph) unbelted rigid barrier test, or to provide protection in more severe crashes, the manufacturer could use advanced air bag technologies to provide less powerful levels of inflation in lower severity crashes, for smaller occupants, for belted occupants, and for occupants sitting with the seat in the full-forward position. Manufacturers could also reduce aggressivity of air bags by various means such as optimizing fold patterns, different cover designs, lighter fabrics, etc. Advanced technologies would also enable the manufacturer to suppress air bag deployment in appropriate circumstances, such as when children are present.

In our Preliminary Economic Assessment (PEA) accompanying the SNPRM, we estimated the benefits of an unbelted rigid barrier test with a maximum speed of 40 km/h (25 mph) vs. 48 km/h (30 mph). The PEA concluded that if the full fleet of vehicles' air bags were designed in the context of unbelted 40 km/h (25 mph) rigid barrier and oblique tests, an estimated 214 to 397 lives saved annually by pre-MY 1998 air bags might not be saved.

2. Summary of Comments

Commenters on the SNPRM nearly unanimously supported adoption of an unbelted rigid barrier test, but sharply disagreed over the maximum speed for that test. Safety advocacy groups, supported returning to 48 km/h (30 mph). Most commenters, however, including all auto companies and all air bag suppliers, IIHS, and NTSB supported a maximum speed of 40 km/h (25 mph).

Commenters supporting 40 km/h (25 mph). Commenters supporting a maximum test speed of 40 km/h (25 mph) argued that there would not be a loss of benefits associated with a test at this speed, as compared to a 48 km/h (30 mph) standard.

AAM stated that the benefits of redesigned air bags will be maintained with a 40 km/h (25 mph) test. It argued that there is no reason to believe air bags designed to the sled test requirements have compromised protection, and that a 40 km/h (25 mph) barrier test is more severe than the sled test.

AAM also stated that a new 40 km/h (25 mph) test cannot simply be compared to the old 48 km/h (30 mph) test because the new test would include additional injury criteria and an additional dummy. It stated that the benefits of the other tests included in the final rule, such as the new belted offset test and the low speed risk reduction tests, should also be considered.

AAM argued that the analyses of benefits presented in the PEA are based on dummy readings from one dummy at one position in a single type of crash test in a single direction at a single speed. It stated that this approach is not comprehensive enough. AAM also argued that the strongest evidence that there are analytical limitations inherent in the agency's benefit analyses (past and present) is that past analyses predicting 1,250 lives lost from the adoption of the sled test that simply have not come true.

AAM stated that it had considered the level-of-benefit question from two different perspectives. The first involved the generation of benefit estimates using a MADYMO math model to develop a theoretical ''optimum'' design for both the 40 km/h (25 mph) and 48 km/h (30 mph) suite of tests. The performance of those designs was then modeled over a broad spectrum of real world crash configurations. Based upon an injury/fatality risk analysis of the model's output injury measures, relative benefits were calculated. The second perspective utilized an ''opportunities matrix'' approach to examine relative benefits by generating effectiveness estimates and applying these estimates to the spectrum of real world crash conditions.

According to AAM, both of these approaches yield the same conclusion—when considering air bag designs constrained by testing unbelted occupants at 40 km/h (25 mph) or 48 km/h (30 mph), the desired goal of reducing serious-to-fatal injuries in real world crashes is best served by requiring testing at 40 km/h (25 mph).

GM submitted an analysis which it said explains why a 25 mph rigid barrier test drives air bag designs that protect unbelted occupants in severe frontal crashes. Among other things, it said that ride down analysis shows that a 25 mph rigid barrier test requires more air bag restraint capacity than an unbelted offset deformable barrier impact at 40 mph.

Vehicle manufacturers stressed the argument that the agency should focus on the experience of redesigned air bags in MY 1998 and MY 1999 models. They argued that these redesigned air bags have provided real world benefits and that there is no evidence that more power is needed.

[22] In particular, the 13 vehicles included one subcompact car, one compact car, four mid-size cars (representing high sales volume vehicles), one full-size car, two mid-size sport utility vehicles, one full-size sport utility vehicle, one pickup truck, one minivan, and one full-size van. The specific vehicles and their classes included a Saturn (subcompact car), a Neon (compact car), an Intrepid, Camry, Taurus, and Accord (mid-size cars), an Acura RL (full-size car), an Explorer and Cherokee (mid-size SUVs), an Expedition (large SUV), a Tacoma (pickup truck), a Voyager (minivan), and an Econoline (full-size van).

Toyota stated that NHTSA's concern that manufacturers will substantially decrease power in future air bags compared to current systems is unfounded. It presented data comparing velocity vs. time traces for the sled test and the 40 km/h (25 mph) test for both an SUV and a sedan, and noted that the 40 km/h (25 mph) test pulses were more severe. Toyota argued that, in order to manage this level of energy, the air bags for these vehicles cannot be depowered further than the current levels, and that there is no reason to believe that air bags designed to the 40 km/h (25 mph) rigid barrier test will perform worse in high speed collisions than those designed to the sled pulse.

IIHS stated that it does not agree that a high-speed barrier test using unbelted dummies will necessarily lead to improved protection for any occupants, belted or unbelted. That organization stated that it disagreed with what it characterized as the agency's claim that, unless it returns to the 48 km/h (30 mph) barrier test, air bags will offer inadequate protection to many unbelted occupants, especially large people in more severe frontal crashes. That organization stated that in a number of studies of air bag performance in moderate to severe frontal crashes, it has shown that drivers are not dying because air bags offer too little protection; rather, drivers are dying because of overwhelming intrusion that no air bag design can overcome, ejection of occupants, or because of injury from the air bag itself.

IIHS argued that these observations call attention to what it believes are two errors in the agency's logic for returning to a 48 km/h (30 mph) test. First, that commenter argued that if air bags are not powerful enough, there should be some real world cases in which the energy of the deploying bags was inadequate to protect individuals in otherwise survivable frontal crashes. IIHS stated that it is not aware of any such case. It also stated that the agency's concern that air bags certified to the unbelted generic sled pulse would be less effective in frontal crashes has no foundation in real world crash data.

Second, IIHS argued that the agency has failed to appreciate that serious and fatal injuries from deploying air bags are happening not only in low speed crashes, but also in the high speed crashes in which air bags are supposed to be most effective. That commenter stated that a recent update (including 1996 data) of its analyses of driver fatalities in air bag-equipped cars indicates air bags were the most likely source of the fatal injuries in about 15 percent of frontal crash deaths. IIHS argued that the agency must account for these deaths, as well as those more easily documented in low speed crashes, before it can justify a return to the 48 km/h (30 mph) unbelted barrier test.

IIHS also addressed the agency's concern that, without a ''severe crash test'' for unbelted occupants, manufacturers may reduce air bag inflation energy, or the size of air bags, thereby compromising their effectiveness. IIHS argued that such changes are constrained by other non-regulatory crash tests to which the manufacturers are subject. That organization stated that NCAP requires that air bags be reasonably deep in order to prevent dummies' heads from striking through the bags, and that offset crash testing by it and others worldwide means manufacturers will continue to install air bags with sufficient radial size to keep occupants squarely behind their air bags, even under conditions of sharp vehicle rotation.

NADA argued that the agency's proposed advanced air bag performance criteria fail to account for reasonably projected increases in safety belt and child restraint usage or for the real-life incremental benefits attributable to ''depowered'' air bags. NADA stated that it is reasonable to assume that by MY 2003, proper driver and passenger (including children) seat belt usage and child restraint usage rates will exceed 80 percent, and that by MY 2006, these rates should exceed 90 percent.

Vehicle manufacturers also argued that it is difficult or impossible to comply with the 48 km/h (30 mph) rigid barrier test for both the 50th percentile adult male dummies and the 5th percentile adult female dummies. They also argued that it may not be possible to satisfy both the 48 km/h (30 mph) unbelted rigid barrier test for both dummies and the low risk deployment tests.

AAM stated that while the agency has claimed that most vehicles with redesigned air bags continue to meet the unbelted 48 km/h (30 mph) barrier test, very little testing has been done with these same vehicles at 48 km/h (30 mph) with 5th percentile adult female dummies. AAM stated that the little testing that has been done produced a 50 percent failure rate. That organization stated that this testing illustrates the design tensions that the industry has been emphasizing. According to that organization, these tensions result from technology constraints which presently discern limited information about occupant size and location, crash sensors with limited predictive capability and air bags with only two power levels.

According to AAM, it is especially challenging to balance occupant protection for both the 5th percentile adult female and the 50th percentile adult male dummies and assure compliance with the barrier test. As an example, AAM cited the agency's test of the Toyota Tacoma, which resulted in an Nij of 2.65 for the 5th female passenger dummy, nearly three times the allowable injury reference value. According to AAM, the air bag size and fill needed to assure compliance with the chest injury limits with 50th percentile adult male dummies at 48 km/h (30 mph) results in noncompliant neck and thorax injury reference values for 5th percentile adult female dummies seated closer to the air bag. Conversely, according to AAM, if the air bag is sized for the unbelted 5th percentile female dummy at 48 km/h (30 mph), there is insufficient restraint of the unbelted 50th male dummy. AAM argued that testing at 40 km/h (25 mph) allows the restraint engineer to design the air bag to provide reasonable occupant protection for a broader range of occupant sizes.

GM made arguments similar to those of AAM. It argued that the unbelted 48 km/h (30 mph) barrier test using the 50th percentile adult male dummy determines the restraint energy, drives the depth of the air bag, and requires a deeper air bag that has more potential to injure a 5th percentile adult female. It argued that the unbelted 48 km/h (30 mph) barrier test using the 5th percentile adult female would require a shallower air bag that would not assure compliance for an unbelted 50th percentile adult male. According to GM, a 40 km/h (25 mph) test would permit air bag depth to be optimized for both the 5th percentile adult female and 50th percentile adult male dummies.

Ford stated that testing of the MY 2000 Taurus using 5th percentile adult female and 50th percentile adult male dummies demonstrates the difficulties of balancing requirements with a 48 km/h (30 mph) test even for vehicles equipped with advanced technologies. That company noted that the MY 2000 Taurus has dual-level inflators and other advanced technologies.

GM argued that there is no technology or combination of technologies existing today that could satisfy both the 48 km/h (30 mph) unbelted rigid barrier test and the low risk deployment tests. Honda stated that it had concerns about being able to meet the rigid barrier test for the 50th percentile adult male dummy and also meet the low risk

deployment test for out-of-position occupants.

Commenters supporting a maximum speed of 40 km/h (25 mph) also argued that a 48 km/h (30 mph) maximum speed would require a return to overly aggressive air bags.

AAM stated that field evidence suggests that the current depowered air bags offer a high level of occupant protection in the real world while enhancing protection for at-risk groups. That organization stated that a return to 48 km/h (30 mph) unbelted testing would require increasing air bag inflator outputs in some vehicles, serving to increase the risk of harm to certain groups.

GM stated that it strongly recommends that ''depowered'' air bags continue to be the highest force level inflation boundary necessary to comply with Standard No. 208. It argued that given the positive indications from the field on the effects of depowering, and the continued positive indications in engineering laboratory testing, it would be a serious setback to motor vehicle safety should the agency send Standard No. 208 backwards by mandating a 48 km/h (30 mph) unbelted rigid barrier test.

Toyota stated that it believes a return to 48 km/h (30 mph) unbelted barrier testing would require an increase in air bag power in many models. That company stated that, given the lack of evidence that higher powered air bags are necessary, it strongly believes that reinstating this requirement would serve only to increase risk to at-risk groups, including out-of-position children and small statured adults.

DaimlerChrysler argued that a return to the unbelted 48 km/h (30 mph) barrier test would necessitate an increase in air bag inflator power, all things being equal. That commenter stated that staged inflators can reduce, but not eliminate, the risk to smaller and out-of-position occupants in lower speed deployments. DaimlerChrysler asserted that to assure compliance, it would expect the power level of the staged deployment necessary to meet the requirements of an unbelted 48 km/h (30 mph) impact to be comparable to the pre-depowering level.

IIHS stated that while NHTSA crash tests indicate that some vehicles may meet the unbelted 48 km/h (30 mph) test without adding more energy, it believes the agency must recognize that this may not be possible in all, or even most, cases. That organization stated that when compliance becomes difficult, it will be far too easy for manufacturers to meet the 48 km/h (30 mph) test by increasing air bag inflation energy (or the second stage of the air bag).

NTSB stated that it is concerned that the 48 km/h (30 mph) unbelted barrier test could result in a return to higher energy air bags.

Recognizing the significant disagreement among commenters concerning whether there should be a return to the 48 km/h (30 mph) test, a broad range of commenters supporting a 40 km/h (25 mph) test argued that the solution should be for the agency to adopt a 40 km/h (25 mph) test in the current rulemaking, and defer any future consideration of a 48 km/h (30 mph) test. As part of this process, they recommended that NHTSA expedite a focused examination of frontal crashes with fatalities to determine, for vehicles with depowered air bags and the latest generation of advanced air bags, how people are dying in these crashes. A 48 km/h (30 mph) test would be considered further if scientific evidence indicated that the 40 km/h (25 mph) test resulted in inadequate protection. Supporters of this approach included NTSB, IIHS, AAM, the National Safety Council, the American Trauma Society, and the National Association of Governors' Highway Safety Representatives. AAM stated that it was committing to provide additional resources for a major real-world data gathering program to provide a greater factual basis for future air bag rulemakings.

Commenters supporting 48 km/h (30 mph). Safety advocacy groups supporting a maximum test speed of 48 km/h (30 mph) argued that it would result in higher life-saving benefits than a 40 km/h (25 mph) speed.

These commenters emphasized that half of all fatalities in frontal crashes occur at delta Vs above 48 km/h (30 mph). Parents argued that a 48 km/h (30 mph) test speed is very typical of potentially fatal crashes since it is in the middle of the crash speeds that cause fatalities. That commenter also argued that air bag systems certified as meeting the injury criteria at the higher speeds proposed in the rule will have greater efficacy in severe frontal collisions than would air bags certified as complying at some lesser speed.

CAS stated that the 5 mph difference between 40 km/h (25 mph) and 48 km/h (30 mph) is substantial. It stated that a 48 km/h (30 mph) barrier crash is 40 percent more severe than a 40 km/h (25 mph) crash. It also stated that NHTSA data show that almost 20 percent of occupant fatalities in frontal crashes occur between 40 km/h (25 mph) and 48 km/h (30 mph) delta V.

Public Citizen stated that real world driving conditions require the return to a 48 km/h (30 mph) test. That organization stated that these conditions include higher speed limits, as well as the prevalence of vastly increased numbers of SUVs and LTVs designed with stiff front ends. Public Citizen stated that the stiffness of these vehicles, as well as other factors including higher mass, transmit increased forces to passenger cars in crashes.

Public Citizen also argued that over the past 30 years, Americans have used the 48 km/h (30 mph) rigid barrier test as the litmus test for a vehicle's crashworthiness. It noted that other motor vehicle safety standards are based on a 48 km/h (30 mph) test. Public Citizen stated that if the 48 km/h (30 mph) test were dropped, the public would view the decision as a step backward.

Public Citizen stated that one indicator of the inadequacy of a 40 km/h (25 mph) test is a statement by GM in the 1980's that it could pass an unbelted 40 km/h (25 mph) test with ''friendly interiors'' and no air bag at all.

CAS also stated that a 40 km/h (25 mph) unbelted test, even if coupled with a 56 km/h (35 mph) belted test, is but a slight variation of GM's proposal to Secretary Dole in 1984 for a 40 km/h (25 mph) unbelted and 48 km/h (30 mph) belted standard. CAS argued that if a car with friendly interiors could meet a 40 km/h (25 mph) barrier test in 1984 without an air bag, as GM suggested then that it could, then the addition of a cosmetic air bag would enable a vehicle to meet Standard No. 208 today, even with its revised injury criteria.

These commenters also cited the agency's estimates in the PEA that a 40 km/h (25 mph) test speed could result in 214 to 397 fewer lives saved each year.

These safety advocacy groups also argued that there is no justification to reduce the longstanding 48 km/h (30 mph) test speed and that such a reduction would be inconsistent with the TEA 21 requirement to improve protection of occupants of different sizes, belted and unbelted.

CAS argued that reducing the unbelted test speed to 40 km/h (25 mph) would decrease the level of protection for unbelted occupants who are involved in moderate to high speed collisions. According to that commenter, Congress cannot possibly have envisioned a backward step as an improvement to safety when it mandated that the advanced air bag rulemaking take place.

Public Citizen stated that the whole point of upgrading Standard No. 208 is

to ensure that automakers make better air bag restraint systems and that the standard should reflect as much as possible the protection needed in real world crashes.

According to Public Citizen, a 48 km/h (30 mph) unbelted barrier test would force manufacturers to incorporate more advanced technology. Public Citizen argued that without the additional challenge of the 48 km/h (30 mph) unbelted test, the automakers would have little motivation to move forward technologically in the future.

These commenters strongly disagreed with the arguments of the industry and some others that a 48 km/h (30 mph) standard would require overly aggressive air bags or not be possible to meet for both 50th percentile adult male dummies and 5th percentile adult female dummies.

Parents stated that the industry's rationale for a 40 km/h (25 mph) maximum speed is that the traditional 48 km/h (30 mph) speed compels production of air bag systems that are necessarily and unavoidably dangerous for small occupants in lower speed collisions. That organization stated that it strongly disagrees with this position. According to Parents, this position ignores the outstanding safety record of many well designed air bag systems that have complied with the 48 km/h (30 mph) requirement over the years. Parents also stated that this argument does not take into account advanced air bag technologies, the technologies that the advanced air bag rule is supposed to foster.

Parents also argued that the SNPRM rebutted the industry's argument that adoption of a 48 km/h (30 mph) test speed would necessarily require vehicle manufacturers to revert to excessive deployment forces found in many systems prior to sled testing. Parents stated that the agency pointed out that virtually all of the depowered air bag systems it tested still passed the 48 km/h (30 mph) test. That organization also stated that compliance margins were fairly wide and typically as wide as margins used by industry in complying with the 48 km/h (30 mph) test. Parents stated that for systems that don't meet the 48 km/h (30 mph) test, development of advanced technologies would allow these vehicles to also meet the test.

Consumers Union argued that the agency's testing of 13 vehicles with redesigned air bags leads it to conclude that even before the comprehensive redesign in air bag systems contemplated in this rulemaking, a wide variety of vehicles with depowered air bags already can pass the 48 km/h (30 mph) unbelted test. That organization stated that, contrary to the industry argument, air bags in many varieties of vehicles apparently do not need to be repowered or made ''overly aggressive'' in order to pass the 48 km/h (30 mph) test.

Consumers Union also stated that in NHTSA tests, two of four vehicles tested, the MY 1999 Saturn and MY 1998 Taurus, passed all the injury criteria for the driver and passenger using unbelted 5th percentile adult female and 50th percentile adult male dummies in 48 km/h (30 mph) rigid barrier tests. That organization argued that if these vehicles can pass these tests even before they have been redesigned to meet a revised Standard No. 208, other vehicles can be engineered to do so as well. These tests were also cited by other commenters supporting a 48 km/h (30 mph) standard.

Public Citizen argued that any trade-offs between meeting requirements for the 5th percentile adult female and 50th percentile adult male dummies can be overcome with the right combination of new technologies. Public Citizen cited dual or multi-level inflators, innovative folding patterns and bag shapes, lighter weight fabrics, tethers, pedal extenders, moving modules, deep dish steering wheels, collapsible steering columns, knee bolsters, stitching that keeps bags narrow to protect in low-level inflation and separates to protect occupants in higher impact crashes, top mounted vertically deploying air bags, chambered air bags (in effect, a smaller bag inside a larger one), and occupant position sensors that adjust deployment level or suppress deployment altogether.

Public Citizen also stated that the new test requirements, including static and dynamic tests using infant, child and small adult size dummies, already address the manufacturers' concerns regarding the ''excessive'' power of air bags in low severity crashes.

Public Citizen expressed concern about the suggestion of some commenters that more data be collected before any decision is made to return to a 48 km/h (30 mph) test. It argued that this was an excuse to delay a safety standard and that there is plenty of real world experience with the 48 km/h (30 mph) test because it was in effect from 1987 to 1997 and because most 1998 and 1999 models continued to comply with that test. Public Citizen argued further that there is a lack of data about a 40 km/h (25 mph) test since there never has been such a test requirement. It stated that the risky decision on this rulemaking would be to lower the test speed to 40 km/h (25 mph).

Public Citizen stated that it believes the driving force behind the auto industry's support for a 40 km/h (25 mph) test is that they want to avoid the expense of designing energy absorbing structures for their SUV and light truck vehicles. It also argued that if the agency finds that the 48 km/h (30 mph) test is too forceful, it has the obligation to require vehicle manufacturers to inform all current owners of 48 km/h (30 mph) air bag compliant vehicles of this fact and require the companies to recall and correct them.

Syson-Hille and Associates presented an analysis of the history of air bags which it argued shows that the fatalities that have been caused by air bags are the result of poor air bag designs and not the 48 km/h (30 mph) barrier test.

3. Response to Comments on Maximum Test Speed

Because the selection of the maximum test speed for the unbelted barrier test represented the primary issue in the SNPRM on which there was significant disagreement among the commenters and drew a significant amount of public interest, we presented a full discussion of the rationale for selecting 40 km/h (25 mph) early in this document. In this section, we provide a specific response to the public comments on that issue, especially those comments which supported a 48 km/h (30 mph) test speed.

As indicated by the discussion we presented earlier in this document, we agree with a number of the arguments made by commenters supporting a 48 km/h (30 mph) test. We agree that a 48 km/h (30 mph) test would not require any kind of general ''repowering'' of air bags. We also agree that there are potential disadvantages associated with adopting a 40 km/h (25 mph) test, the most significant being that there could be significantly reduced safety benefits if manufacturers engaged in significant and widespread further depowering.

However, there are important areas where we differ with the commenters supporting a 48 km/h (30 mph) test speed.

First, we believe that setting the maximum speed at 48 km/h (30 mph) during the TEA 21 phase-in period, as advocated by these commenters, would not allow manufacturers to focus initially on risk reduction, would not give the manufacturers as much flexibility in simultaneously improving high speed protection and risk reduction, and would not allow advanced air bag technologies to mature and manufacturers to gain experience with them before requiring the extensive use of these technologies.

While these disadvantages would be partially mitigated by setting the

maximum speed at 40 km/h (25 mph) for an initial period and at 48 km/h (30 mph) thereafter, this approach would place a premium on our being able to project accurately the pace of development and the effectiveness of advanced air bag technologies. Depending on how advanced air bag technologies developed, this approach would still give the manufacturers less flexibility in simultaneously improving high speed protection and risk reduction.

We believe that these uncertainties associated with advanced technologies, particularly the more complex ones, must be considered in selecting the maximum test speed. While we agree that many of the limitations associated with dual level inflators can be overcome by such features as multi-level inflation, chambering, and real time occupant position sensing, we believe there are significant uncertainties as to how quickly these more complex technologies can be implemented. There are advantages to vehicle manufacturers initially implementing simpler advanced technologies and learning from that experience before moving on to the more complex technologies.

As discussed earlier, particularly given the risks that the first generation of air bags posed to out-of-position children and small adult females, and the reaction of the public to those risks, it is very important that advanced air bags be properly designed from the very beginning. Air bags have proven to be highly effective in saving lives. However, if advanced air bags proved to be unreliable, or to pose significant risks to out-of position children and small adult females, the public acceptability of air bags would be put at risk. For these reasons, we believe that, in selecting a maximum test speed, the uncertainty associated with meeting the challenge of simultaneously minimizing risk and improving protection is best resolved in favor of minimizing risk, as long as there is good reason to believe that it is unlikely that vehicle manufacturers would reduce the overall level of high speed protection being provided today.

A second key area where we disagree with the commenters supporting a 48 km/h (30 mph) standard concerns the type of air bag system that would be produced under a 40 km/h (25 mph) standard. It is our view that the air bags most likely to be produced under a 40 km/h (25 mph) standard would offer at least as much overall high speed protection as the current redesign air bags. While manufacturers might make some adjustments in providing high speed protection for different size occupants, we believe it is unlikely that they would reduce the overall level of protection, much less switch to some kind of new, hypothetical air bag design that might minimally pass the 40 km/h (25 mph) test, but provide little or no protection to unbelted occupants in higher severity crashes.

There are several reasons for this belief. First, the record shows that vehicle manufacturers did not respond to the flexibility provided by the sled test by providing air bags that minimally complied with the sled test. They did not depower their air bags as much as they could have, and, for the vast majority of their vehicles, they continued to provide air bags that passed the 48 km/h (30 mph) test with the 50th percentile adult male dummy.

Second, the vehicle manufacturers have specifically committed to not reducing high speed protection of air bag systems through significant and widespread depowering. See letter from AAM and AIAM dated April 4, 2000 (Docket NHTSA–99–6407, item 126).

Third, a 40 km/h (25 mph) maximum test speed does not create any significant cost incentive for vehicle manufacturers to provide reduced protection compared to a 48 km/h (30 mph) maximum test speed. As discussed in the FEA, we believe that costs are essentially the same for both test speeds. We also note that the vehicle manufacturers have stated that regardless of whether the maximum test speed is set at 40 km/h (25 mph) or 48 km/h (30 mph), they will employ the same technology on vehicles.

Fourth, there are other constraints that discourage significant further depowering. AAM and AIAM stated that air bag power cannot be significantly reduced and still permit air bags to perform well in the 56 km/h (35 mph) belted NCAP tests. Those tests are the same as the 56 km/h (35 mph) belted tests that will be added to Standard No. 208 during the second phase-in established by this rule. We note that the need to perform well in angle tests in the 40 km/h (25 mph) unbelted rigid barrier test will help ensure that vehicle manufacturers do not inappropriately shrink the size of current air bags.

Fifth, as discussed earlier in this document, the vehicle manufacturers are already introducing new technologies that enhance protection and/or reduce risk, even though these technologies are not needed to meet current requirements.

Public Citizen, CAS and the Consumer Federation of America argued that we should not rely on manufacturer representations that they will not further depower their vehicles. These commenters stated that there can be no enforcement of a promise, that what is in the rule is what the companies will comply with, and that anything else is illusory.

Although our conclusion that vehicle manufacturers are unlikely to reduce the overall level of high speed protection provided by MY 1998 and MY 1999 redesigned air bags rests in part on the representations of manufacturers, it is primarily based on factors other than promises. For all of the reasons discussed above, we believe that the manufacturers are, in fact, in a situation where prudent judgment dictates retaining the current overall level of protection in high speed crashes.

We also plan to monitor how vehicle manufacturers respond to the advanced air bag mandate. If they should change their current plans and take actions that reduce the overall level of protection, we will respond appropriately. The possibility of rulemaking, including the reduced flexibility that could accompany a 48 km/h (30 mph) maximum test speed, is another incentive for vehicle manufacturers not to take such actions as they design their advanced air bags.

As to Public Citizen's argument that vehicle manufacturers support a 40 km/h (25 mph) maximum test speed because they want to avoid the expense of designing energy absorbing structures for SUVs and light trucks, we note that while such design changes would make it easier to pass a 48 km/h (30 mph) test, it is by no means clear that the higher test speed would require such changes. Moreover, we note that IIHS said in its comments that adding the 56 km/h (35 mph) belted NCAP test to Standard No. 208 could encourage vehicle manufacturers to soften the crash pulses of SUVs and light trucks.

We also disagree with the suggestion of some commenters that TEA 21 precludes us from establishing a maximum test speed below 48 km/h (30 mph). This view is based on the argument that any speed below the old 48 km/h (30 mph) level cannot be considered to ''improve occupant protection,'' as required by TEA 21.

This argument fails to consider the major differences between the older unbelted rigid barrier tests and the unbelted rigid barrier tests required by this new rule. The older unbelted rigid barrier test used a single test dummy, representing a 50th percentile adult male, positioned well back from the air bag. The only measure of the effectiveness of the air bag was its effectiveness in a high speed crash into a rigid barrier. There was no assessment

of risks for occupants who might be positioned near the air bag. The injury criteria included assessments of injury likelihood to the test dummy's head, chest, and upper legs.

Today's rule mandates a much more comprehensive assessment of air bag protection. It adds an entirely new series of tests to assess low speed risk to occupants of many different sizes. For the first time in the history of Standard No. 208, the agency will use dummies representing a 12-month-old, a 3-year-old, a 6-year-old, and a 5th percentile adult female. All of these new dummies will be used in assessing risk of air bags. For the high speed test, performance will be evaluated using both the mid-sized male dummy positioned well back from the air bag *and* the new 5th percentile female dummy positioned as far forward as the seat allows. For both dummies in the high speed unbelted test, the limit on permissible chest responses has been made more stringent and an injury criteria has been added to assess the likelihood of neck injuries. Because of all these additional complexities and increased stringency, it is not correct to claim that setting the unbelted rigid barrier test speed below 48 km/h (30 mph) necessarily reduces protection to unbelted occupants.

In addition, we note that the purpose of the new belted offset test is to help ensure that vehicle manufacturers upgrade their crash sensing and software systems, as necessary, to better address soft crash pulses. These improved crash sensing and software systems will benefit both belted and unbelted occupants.

We also note that the suggestion that TEA 21 somehow requires an unbelted barrier test with a test speed not lower than 48 km/h (30 mph) is inconsistent with the language of that statute. In fact, TEA 21 expressly left open the possibility of our retaining the sled test. That test has a severity level significantly below that of a 48 km/h (30 mph) barrier test and a 40 km/h (25 mph) barrier test.

We also disagree with the argument of some commenters that if we decide that the 48 km/h (30 mph) test requires overly powerful air bags, we must require vehicle manufacturers to notify all current owners of vehicles with 48 km/h (30 mph) air bags of this fact and to recall and correct the vehicles. In the first place, while we are setting the maximum test speed at 40 km/h (25 mph), we have not determined that a 48 km/h (30 mph) test requires overly powerful air bags. Second, the fact that we are requiring manufacturers to provide improved air bags in new vehicles does not mean that earlier vehicles that do not meet the new requirements have a safety-related defect. If we were to accept that argument, every rulemaking we conduct to improve motor vehicle safety would result in earlier vehicles that did not satisfy the new requirements being considered to contain safety-related defects. This would be completely inconsistent with the statutory scheme set up by Congress. When the agency mandated automatic restraints, we did not require the recall of earlier vehicles without automatic restraints. Likewise, when Congress mandated air bags, we did not require the recall of earlier vehicles without air bags.

A more detailed discussion of a number of the comments concerning the unbelted test is provided in separate agency documents which are being placed in the docket. Of particular note are the Final Economic Assessment, prepared by our Office of Plans and Policy, and a paper prepared by our Office of Research and Development titled ''High Speed Unbelted Test Requirements of FMVSS No. 208; Analysis of Issues Raised by Public Comments.''

D. Other Issues

1. Location of 5th Percentile Adult Female Dummy

In both the NPRM and the SNPRM we proposed conducting the barrier tests with the 5th percentile adult female dummy in the full-forward seat track position. We stated that we believe the full-forward position to be the worst case position for an individual exposed to a deploying air bag and the most demanding of air bag systems. We also acknowledged in the SNPRM that this position would rarely need to be used, particularly on the passenger-side. We requested comment on whether testing in a seat track position other than full-forward would adequately protect occupants of all sizes while allowing sufficient design freedom.

Consumers Union, CAS, and Advocates all supported our proposed seat track position. They cited the disproportionately high number of women 160 cm (5′2″) and under who have died as a result of a deploying air bag and argued that testing under this rule should be required under the most extreme conditions. CAS stated that the only condition under which the agency might consider an exception to this procedure is if adjustable pedals are present in the vehicle that would enable a typical small female to move away from the steering wheel hub. Public Citizen agreed with the agency's position in the SNPRM that if manufacturers can't provide protection in the full-forward position, they have option of moving that position back and making other adjustments, such as adjustable pedals, on the driver side.

The NTSB stated that it believed the full-forward position could be inadequate if an individual could not reach the pedals while sitting against the seat back. It argued that we should position the dummy relative to the accelerator pedal rather than the seat track.

Vehicle manufacturers, including AAM, DaimlerChrysler, Toyota and Honda, averred that the full-forward seating position was too extreme and unrepresentative of driving patterns in the real world. The manufacturers stated that a full-forward seat track could force manufacturers to move the seat track back, which could lead to less storage space, reduced ingress and egress space for rear passengers, and, in smaller vehicles, an inability to install properly rear facing safety restraints in the back seat. Manufacturers also contended that testing in the full-forward position could force them to design smaller air bags since there would be less room for inflation.

The primary argument driving the manufacturers' comments is their assertion that few people ever drive in the full-forward position, as evidenced by the UMTRI study, as well as informal studies of their own. DaimlerChrysler and Honda recommended that the seat track position for the 5th percentile female be in accordance with the vehicle manufacturer's 5th percentile female seating reference position.

We have decided to retain the requirement that the 5th percentile adult female dummy be tested in the full-forward position. As an initial matter, we ran 11 tests of production vehicles at 40 km/h (25 mph) or greater using an unbelted 5th percentile adult female driver and passenger in the full-forward seat track position in a perpendicular rigid barrier test. Of these 11 tests, nine vehicles passed all of the applicable injury criteria on the driver side (5 at 48 km/h (30 mph), 2 at 44 km/h (27.5 mph), and 2 at 40 km/h (25 mph)). On the passenger side, seven out of 11 passed all applicable injury criteria. We tested two vehicles in the same 48 km/h (30 mph) test, but with the seat moved back 7.6 cm (3 inches) from the full-forward position. We found that this was roughly consistent with the UMTRI seating procedure in one vehicle and significantly further back than the UMTRI positioning would have been for the other. Moving the seat 7.6 cm (three inches) back also placed the dummy's chest approximately 25 cm

(ten inches) back from the steering hub. While both dummies on the driver's side passed the applicable injury criteria, one dummy on the passenger side exceeded the maximum allowable values for failed chest g's and femur loads. We also found that during these tests, the dummy on the driver side could not always reach the accelerator pedal. This fact, along with the numerous phone calls the agency has received over the past few years, indicates to us that at least some individuals are driving with the seat in the full-forward seat track position. If a vehicle is designed to be used in a particular position, we believe it is reasonable to assume that the position will be used at least some of the time.

We are cognizant of the manufacturers' concern that today's rule may require them to limit the extent of seat track travel. To the extent this increases occupant protection, this would appear to be a positive move. We note that in some vehicles the seat will slide forward in order to ease access to the back seat, but will then lock into place somewhere further back on the seat track. Since today's rule would not require testing in a seat position that is not fixed in place when the vehicle is driven, we believe this type of design could continue to be used. Of greater concern is the claim that some smaller vehicles will no longer be able to accommodate rear facing child restraints in the rear seat. We strongly believe that in most instances manufacturers can and should design their vehicles to allow adult occupants to ride safely in the front seat and infants to ride safely in the back seat. However, we note that the need to place rear facing child restraints in the back seat may force the front seat passenger to pull the front seat full forward. In such a circumstance, the passenger will need the protection of a deploying air bag without being exposed to undue risk. This also applies to a passenger who moves the seat full forward because the rear seat is loaded with cargo. These two circumstances argue for, rather than against, the need to test the front seat in the full-forward position.

We have decided against adopting the NTSB's recommendation that the seating procedure be based on distance from the accelerator pedal rather than seat track position. Our test requirements must be objective. We believe linking the position to distance from the pedal could introduce too many ambiguities into the seating procedure for it to remain sufficiently objective.

2. Minimum Test Speed

In the SNPRM, we proposed that manufacturers would need to meet the unbelted rigid barrier test at any speed between 29 km/h (18 mph) and 40 to 48 km/h (25 to 30 mph). This range represents a significant change from the belted barrier test and previous unbelted barrier tests, which have required injury criteria to be met at any speed up to 48 km/h (30 mph).

GM and Ford supported the proposed lower test parameter 29 km/h (18 mph). AAM, DaimlerChrysler and Toyota supported a higher minimum test speed. VW and Honda supported a lower minimum test speed. Delphi urged the agency to return to its traditional ''any speed between zero and'' the maximum test speed, arguing that the minimum test speed will result in an unacceptable safety trade-off for individuals who could be aided by a deploying air bag in lower speed crashes.

The concerns of the vehicle manufacturers opposed to the 29 km/h (18 mph) lower limit revolve around their ability to meet both the low risk deployment tests at any speed up to 29 km/h (18 mph) and the high speed tests at any speed between 29 km/h (18 mph) and 40 to 48 km/h (25 to 30 mph). These manufacturers argued that the basic premise for dual-stage inflation systems is that the first stage can be tailored to reduce risk for children while offering protection for 5th percentile adult while the second stage protects the 50th percentile male occupant. According to the manufacturers, in many cases the first stage air bag will not be sufficient to satisfy the injury criteria in a test at 29 km/h (18 mph). In order to assure compliance with both the unbelted crash test requirement and a low risk deployment option utilizing a dual-stage air bag system, a manufacturer arguably would either have to drop the threshold for the second stage air bag close to 29 km/h (18 mph) to ensure compliance for the 50th percentile adult male or provide a higher-energy first stage inflator. The commenters asserted that if NHTSA were to impose the proposed speed range for the unbelted tests, we would create a situation that would make compliance with a low risk deployment option impossible, since it would not be possible to assure that only the first stage air bag deploys at 29 km/h (18 mph) for the out-of-position test. Since the reliability of dynamic suppression systems is still unproven, the application of a test requirement that precludes low risk deployment systems would create a problem at the driver position.

On the other end of the spectrum, Delphi has argued that allowing a minimum test speed for the unbelted barrier test may result in serious injuries that could otherwise be avoided. Delphi stated that while it recognized that the proposed minimum test speed was intended to discourage lower air bag threshold speeds, unbelted occupants without an air bag may exceed the neck injury criterion in typical vehicle impacts between 16 and 22.4 km/h (10 and 14 mph). Delphi believes that NHTSA's objective in encouraging higher air bag threshold speeds is the reduction of injury risk to out-of-position occupants, the same objective addressed by the proposed advanced air bag systems. If the proposed advanced air bag systems are truly effective, Delphi asserts, lower thresholds should mitigate the injury risk that current systems pose. Accordingly, Delphi recommended that vehicle speed ranges be changed to 0 to 40 km/h (0 to 25 mph) for unbelted occupants in all rigid barrier and oblique barrier tests.

We have decided to raise the minimum test speed for the unbelted test from 29 km/h (18 mph) to 32 km/h (20 mph) while decreasing the maximum threshold for the various out-of-position tests from 29 km/h (18 mph) to 26 km/h (16 mph). We believe that this difference in speed between the two tests will be sufficient to resolve manufacturers' concerns with the potential overlap of the low risk deployment and barrier tests. Today's requirement builds in a 6 km/h (4 mph) ''grey zone'' that will allow manufacturers to deploy both inflator stages, if needed, in all high speed tests, while preserving their ability to deploy only the first stage (or allow for deployment of a combination of benign stages) of the air bag in the low risk deployment tests. We are rejecting DaimlerChrysler's and Toyota's request that we test unbelted dummies only at 48 km/h (25 mph) because we continue to believe a range of speeds is necessary to adequately protect drivers and adult passengers.

As to Delphi's concern that vehicle occupants will be afforded inadequate protection in the real world because of a lower parameter on the unbelted barrier tests, we note that vehicle manufacturers must still certify compliance to the belted test at all test speeds from zero to 48 km/h (30 mph), and must satisfy the low risk deployment criteria for the 5th percentile adult female on the driver's side.

VII. Improving the Protection of Belted Occupants in Serious Crashes

In the SNPRM, we proposed two crash test requirements, both of which would have to be satisfied, to improve the protection of belted occupants in serious crashes. The first was a belted rigid barrier test; the second was a belted offset deformable barrier test.

A. Belted Rigid Barrier Test

Standard No. 208 currently includes an up-to-48 km/h (30 mph) belted rigid barrier test (perpendicular and up to ± 30 degrees oblique to perpendicular) using 50th percentile adult male dummies. As indicated earlier, this test represents a vehicle striking a like vehicle moving at the same rate of speed.

In the SNPRM, we proposed to add use of the 5th percentile adult female dummy to this test, but only in the perpendicular mode. We proposed to limit use of this dummy to the perpendicular mode in light of our desire to avoid unnecessary test requirements and because we believed that if a vehicle can pass the perpendicular test with 5th percentile adult female dummies and the oblique tests with 50th percentile adult male dummies, it would also pass the oblique test using 5th percentile adult female dummies.

As noted above, we also indicated that if we reduced the maximum speed of the unbelted test to 40 km/h (25 mph), we might increase the maximum speed of the belted rigid barrier test from the current 48 km/h to 56 km/h (30 to 35 mph). This is the same speed at which vehicles with belted dummies are tested in existing NCAP tests.

The commenters on the SNPRM supported adding the 5th percentile adult female dummy to the existing belted rigid barrier requirements. Some commenters requested that we consider deletion of the existing belted oblique crash tests using 50th percentile adult male dummies. Honda stated that it believes that the unbelted oblique tests are sufficient to confirm that air bags offer sufficient protection for belted occupants in oblique crashes.

Most commenters that supported a 40 km/h (25 mph) unbelted rigid barrier test, including AAM, also supported increasing the maximum speed of the belted rigid barrier test from the current 48 km/h (30 mph) to 56 km/h (35 mph). However, these commenters urged that the 56 km/h (35 mph) belted rigid barrier test be phased in after the TEA 21 phase-in period. They also urged that the higher speed test initially be limited to use of the 50th percentile adult male dummy, for which there is a large amount of test data because of NCAP. They urged further that a separate rulemaking be conducted to determine whether it is practicable to meet this test requirement using 5th percentile adult female dummies.

IIHS stated that increasing the speed of the belted rigid barrier test to 56 km/h (35 mph) would accelerate the improvement of frontal crash protection afforded by light trucks. That organization stated that while many vehicles already perform well in the 56 km/h (35 mph) NCAP test, light trucks have been an exception. IIHS stated that their stiff frames and short front ends (relative to their mass) have led to short crash pulses that make it difficult to design effective, nonaggressive air bag systems. IIHS stated that it expects one result of subjecting all passenger vehicles to a 56 km/h (35 mph) belted requirement would be the softening of the front ends of light trucks. According to that organization, this would benefit not only the occupants of light trucks, but also the occupants of other vehicles with which the trucks collide. IIHS stated that to maximize the likelihood that structural changes, rather than more aggressive air bag systems, would be incorporated to meet the new requirements, a long phase-in period should be considered for light trucks.

While most vehicle manufacturers supported increasing the belted rigid barrier test speed to 56 km/h (35 mph), as long as long lead time is provided, there were exceptions. Volkswagen stated that it believes there is no safety justification for such an increase and that, on the contrary, there could be potentially significant disadvantages to motor vehicle safety. That company stated that the higher crash speed imposes significantly increased energy absorption requirements on vehicle structures and air bag designs, which would lead to more aggressive designs. Volkswagen stated that this would be counterproductive to the concern of vehicle aggressivity/compatibility in the vehicle fleet and protection for the small driver and out-of-position children.

After carefully considering the comments, we are adopting as final our proposal to use the existing 48 km/h (30 mph) belted rigid barrier test with some modifications. As an initial matter, we are requiring tests with the 5th percentile adult female dummy in the perpendicular mode. This will help ensure that vehicle manufacturers design air bags so as to improve protection to belted persons who sit in the full forward position, including short-statured adult female drivers.

We have also decided to accept the recommendation of some commenters to eliminate the existing belted oblique tests using 50th percentile adult male dummies. The primary purpose of the oblique tests is to ensure that air bags are sufficiently wide to provide protection if an oblique crash results in the occupant moving forward at an angle. We agree that the unbelted oblique tests are more stringent than the belted oblique tests in this respect, since the belts limit occupant movement, and that the unbelted oblique tests, which are being retained, will ensure that air bags are sufficiently wide to provide protection to both belted and unbelted occupants in oblique crashes.

We will require vehicle manufacturers to begin certifying compliance with the belted 50th percentile adult male dummy at 56 km/h (35 mph) starting in 2007. Compliance will be required under a phase-in schedule that is fully discussed later in this document. We also plan to initiate rulemaking in the near future proposing to increase the upper limit for the belted rigid barrier test from 48 km/h (30 mph) to 56 km/h (35 mph) with the 5th percentile adult female dummy.

We are unconvinced that a 56 km/h (35 mph) belted rigid barrier test will require more aggressive air bag systems and vehicle frames, as VW has contended. The 56 km/h (35 mph) belted barrier test has been used in NHTSA's New Car Assessment Program (NCAP) since 1979, and most vehicles today meet the injury criteria in today's rule at that speed. NHTSA's NCAP test experience with vehicles certified to the sled test has demonstrated that when manufacturers ''depowered'' their air bags, the vehicles performed as well in NCAP tests as they did previously. In an era when the government, the industry, and other groups are working hard to increase seat belt use among the general public, raising the belted test speed to 56 km/h (35 mph) for the 50th percentile test dummy is consistent with TEA–21s requirements to improve occupant protection for belted occupants. Testing at 56 km/h (35 mph) will result in manufacturers improving the combined performance of seat belts and air bags. Improving performance in this area can involve relatively simple changes in seat belt design, such as adding pretensioners or load limiters or modifying the belt system's elongation characteristics to interact more favorably with the air bag. As we are not requiring manufacturers to begin certifying any vehicles to this test speed before September 1, 2006, they have ample time to make changes to their

vehicles that do not involve increasing vehicle or air bag aggressivity.

B. Belted Offset Deformable Barrier Test

In the SNPRM, we proposed to add a new crash test requirement to Standard No. 208, an up to 40 km/h (25 mph) offset deformable barrier test using belted 5th percentile adult female dummies (belted offset test). We proposed this test in an attempt to ensure that vehicle manufacturers upgrade their crash sensing and software systems, as necessary, to better address soft crash pulses. Research conducted by Transport Canada has shown that one of the causes of adverse effects of air bags is late deployment of some air bags in crashes with soft pulses, and the proposed test was one that Transport Canada has been using in its research program. We proposed that the test be conducted with the driver's side of the vehicle engaged with the barrier.

Most commenters supported adding the belted offset test, although some urged that an out-of-position test for the passenger side be developed as an alternative to this test.

AAM stated that it supports the proposed test, but claimed that its added safety benefit is questionable. That commenter stated that the test offers no added safety benefit in a rulemaking which also includes requirements for belted and unbelted 5th percentile adult female dummy rigid barrier crash testing and protection against air bag-induced injuries with suppression or low risk deployment performance. AAM noted, however, that if a vehicle manufacturer selected the suppression presence option for all of the child dummies, there would be no requirement to address minimizing risks to out-of-position passengers larger than six-year-olds. AAM recommended that an out-of-position test for the passenger side using 5th percentile adult female dummies be developed and proposed in a future rulemaking as an alternative to this test.

AAM also argued that if a sensor system must detect and respond to a soft pulse in an offset deformable barrier regulatory test, it can result in designs with either low thresholds for deployment or in designs which have late deployments in the field. That organization also stated that offset testing with the proposed barrier is not ready for use for the full vehicle fleet in the United States. According to that organization, the European barrier used in the test was never designed for heavier SUVs and light trucks.

General Motors and Ford each supported adding the proposed belted offset test to Standard No. 208 at this time, but urged that a passenger side out-of-position test be developed to either replace it or be provided as an optional alternative to it.

Toyota stated that it generally accepts the proposed offset test as a means to assess sensor timing and out-of-position issues, but expressed concern about the appropriateness of the test for heavier vehicles like SUVs and light trucks. According to that company, these vehicles tend to either override the barrier or deform the face so badly that it essentially becomes an offset rigid barrier test, which does not represent actual car-to-car collisions in the real world.

CAS stated that the proposed test should be included in the final rule. That organization stated that because of the problems air bag crash sensors have encountered in being able to discriminate between low speed and high speed crashes, this test is necessary to adequately assess sensor performance.

CAS argued, however, that the test should be performed on both the driver and passenger side in order to prevent manufacturers from optimizing their vehicles solely on one side. That organization stated that if NHTSA adopts the test for the driver side only, a manufacturer might choose to add satellite crash sensors to the frontal crush zones of a vehicle only on the driver side. Advocates also expressed concern about requiring the test only with the driver side of the vehicle being struck.

Parents stated that the test should be conducted with unbelted as well as belted occupants, and that this part of the SNPRM improperly favored belted occupants over unbelted ones.

Delphi recommended increasing the speed range specified for the test to 0 to 48 km/h (30 mph) instead of 0 to 40 km/h (25 mph). That commenter noted that, for many vehicles, an air bag might not be required to satisfy the injury criteria at test speeds up to 40 km/h (25 mph). Thus, air bag systems might be designed with sufficiently high thresholds that they do not deploy in this test. Delphi stated that one of the objectives of the test is to evaluate performance in sensing threshold events, since there is a potential for occupants to be out-of-position when the air bag deploys in such situations. Delphi stated that it would be necessary to increase the maximum speed to 48 km/h (30 mph) to cover the sensing threshold for many vehicles and that the significance of the test would be greatly diminished if this is not done.

Consumers Union supported the addition of the proposed test, but urged that the test be conducted at 64 km/h (40 mph), instead of 40 km/h (25 mph). CU questioned how much this test will contribute when it is run at what it views as a low and unchallenging speed. Public Citizen also supported the addition of the test while stating that a higher speed test, as a supplementary test of structure, intrusion, and sensitivity, would be welcome.

NTSB expressed concern that inclusion of the offset deformable barrier test at the same time as advanced air bag technology is being developed might result in unforeseen problems. While that agency did not identify what those potential problems could be, it stated that it may be desirable to establish a separate schedule or a later phase-in.

DaimlerChrysler stated that it opposes inclusion of the proposed belted offset deformable barrier test in Standard No. 208. That company cited concerns about the European barrier not being appropriate for testing heavier vehicles such as SUVs and light trucks. DaimlerChrysler recommended that the test be removed since advanced air bags, by definition, will be designed to pose less risk to out-of-position occupants. As an alternative, that company recommended replacing the belted offset deformable barrier test with a low risk deployment test for the passenger side.

After carefully considering the comments, we have decided to adopt the belted offset test as proposed. We agree with the suggestion of several commenters that an out-of-position test using 5th percentile adult female dummies should be developed for the passenger side, and will conduct research on that issue. We note, however, that such a test would not necessarily serve as a replacement for a test that is intended to ensure improved crash sensing systems. We also agree with the suggestion of several commenters about the desirability of a high speed offset test to address intrusion and vehicle structure. We will continue to pursue our previously-announced plans to conduct separate rulemaking on the issue of whether to add a high speed offset test to Standard No. 208.

We would like to note again that the main purpose of the belted offset test, at the proposed range of speeds, is to help ensure that vehicle manufacturers upgrade their crash sensing and software systems, as necessary, to better address soft crash pulses. Improved sensing technology will be particularly important if manufacturers design

vehicles with softer front ends to meet the 56 km/h (35 mph) belted rigid barrier test discussed earlier. As discussed in the September 1998 NPRM, research conducted by Transport Canada has shown that one of the causes of adverse effects of air bags is late deployment of some air bags in crashes with a ''soft crash pulse.'' In order to reproduce the softer, longer duration crash pulse, it selected the 40 percent offset barrier. It conducted crash tests into the barrier at 8 km/h (5 mph) increments up to 40 km/h (25 mph).

Transport Canada found that at 40 km/h (25 mph), the air bag typically deployed and was sometimes so late that the test dummy would be right on the steering wheel at that time, a ''worst case'' condition. We noted in the NPRM that the problem of late deployment appeared to exist for only some vehicles. We noted further that it could be addressed by such means as improving computer algorithms and adding crash sensors to a vehicle's crush zone to provide additional and earlier information to use in the decision-making algorithm.

A test that is intended to encourage improved sensing systems does not serve the same purpose as the low risk deployment test suggested by some commenters as an alternative or substitute. If, as a result of an improved sensing system, an air bag that previously would deploy after an occupant moves out-of-position now deploys in a timely manner, it can provide protection. However, if an air bag deploys so late that the occupant has already moved onto the steering wheel, it cannot provide protection. We encourage vehicle manufacturers to respond to this new test requirement by improving sensing systems and not just providing low risk deployment.

As to Delphi's recommendation that we increase the speed range to 48 km/h (30 mph), we note that such a speed is outside the scope of our proposal. To the extent that Delphi is suggesting that our test may not pick up a late deployment problem for vehicles that are designed with sufficiently high thresholds that the air bag does not deploy in this test, we acknowledge that in some instances a vehicle's air bag system may not deploy in this test. However, our experience has been that the vast majority of air bags deploy in offset barrier crash tests slightly below 40 km/h (25 mph). Additionally, when there is a deployment, we believe crash sensors are more rigorously tested in a 40 km/h (25 mph) test than in a higher speed test. We ran offset tests at both 40 km/h (25 mph) and 56 km/h (35 mph) prior to publication of the SNPRM. In reviewing the test results, we observed that the air bags in the 56 km/h (35 mph) tests deployed significantly more quickly than in the 40 km/h (25 mph) tests. Based on these observations, we believe that increasing the range of the offset deformable barrier test up to 48 km/h (30 mph) will not test the sensor technology any more stringently than an up to 40 km/h (25 mph) offset deformable barrier test since the 40 km/h (25 mph) test better replicates late deployments in the real world.

In response to Parents, we note that the improved sensing systems required by this test will benefit both belted and unbelted occupants. The fact that this test is conducted in the belted condition only is not intended to favor belted occupants over unbelted occupants. The belted offset test may represent the worst case scenario since the belt allows the dummy's head and neck to rotate into the path of the deploying air bag. This condition may better test for potential neck injuries than an unbelted test. Additionally, some tests, such as the oblique tests, will be conducted only with unbelted occupants. We have designed the overall matrix of tests to meet the need for safety for all occupants, belted and unbelted, while avoiding unnecessary tests and compliance costs.

We are not adopting the suggestion made by some commenters that the test be conducted both with the driver side of the vehicle engaged with the barrier and with the passenger side of the vehicle engaged with the barrier. We believe that testing with the driver side of the vehicle engaged with the barrier will be sufficient to help ensure that vehicle manufacturers improve their sensing systems.

We recognize that this test, like any other, has limitations. For example, the test represents only one of many types of soft pulses, and one specific offset configuration. While it would always be possible to identify additional tests that represent potential real world situations, we must strike a balance between ensuring that there are sufficient tests to meet the need for safety and avoiding unwarranted compliance burdens. We believe that the addition of this test with only the driver side of the vehicle engaged with the barrier strikes this balance. However, we will monitor future air bag system designs and will consider changing this decision if we find that manufacturers are implementing sensor systems that optimize performance only for impacts into the driver's side of the vehicle.

We believe that the concerns expressed by commenters about the appropriateness of the test barrier for heavier SUVs and light trucks are not significant with respect to a test conducted at speeds up to 40 km/h (25 mph). Even if bottoming out occurs, the test still represents a relatively mild crash, and air bags should be designed to provide appropriate performance under a wide range of conditions.

Similarly, we believe that AAM's concerns that an offset test can result in designs with either low thresholds for deployment or in designs which have late deployments in the field are not relevant to a test conducted at speeds up to 40 km/h (25 mph). As noted earlier, the vast majority of existing air bag systems deploy in offset deformable barrier tests below 40 km/h (25 mph). We will consider these concerns further if we separately propose to use the European barrier in a high speed offset test.

As to NTSB's concern that adding this test at the same time as requiring advanced air bags may cause unforeseen problems of an unspecified nature, we note that vehicle manufacturers have been working to address the problem identified by Transport Canada for several years. Moreover, we believe that advanced air bag systems should easily be able to meet this requirement.

VIII. Minimizing the Risk of Injuries and Deaths Caused by Air Bags

The one fact that is common to all persons who are at risk from air bags is that they are extremely close to the air bag at time of deployment. Behavioral changes, such as ensuring that children ride in the back seat and that all occupants are properly restrained, can sharply reduce the number of persons who are in such positions.

However, to minimize air bag risks for the remaining persons who are most likely to be close to the air bag at time of deployment, one of two things must be done: either air bag deployment must be suppressed, or the air bag must be designed to deploy in such a manner that it does not cause a significant risk of injury to persons in such positions. Each of the technologies to minimize air bag risks follows one of these approaches.

As we developed test requirements to minimize air bag risks, we needed to account for the fact that the persons who are potentially at risk vary from infants to adults, and have different potentials for injury. We therefore found it necessary to develop requirements using a variety of test dummy sizes. Moreover, since we wished to avoid requirements that are unnecessarily design-restrictive, it was necessary to develop a variety of testing options that

account for the kinds of effective technological solutions that are under development.

We note that it was never our intention to limit manufacturers to using systems that provide only suppression, where appropriate, or low risk deployment, as opposed to systems that may combine suppression and low risk deployment. Moreover, we recognize that there may be safety benefits to using a combination of approaches and technologies.

Even looking at suppression systems alone, the use of multiple technologies may provide benefits. For example, manufacturers might combine weight and pattern sensing to achieve greater reliability.

Similarly, the combination of suppression and low risk deployment may better achieve the goal of minimizing air bag risks. For example, as Toyota noted, a system designed to suppress the passenger air bag for children below a specified weight would not suppress the air bag for a young child seated on an adult's lap. However, low risk deployment might prevent serious injury in such a situation.

Because it is necessary to test the various types of suppression systems and low risk deployment systems differently, we proposed a variety of testing options that account for the kinds of effective technological solutions that are under development. Where more than one option is specified, a manufacturer must meet at least one option; nothing precludes the manufacturer from meeting more than one. The issue of certifying compliance to more than one option is discussed later in this document.

Each of the test requirements we proposed in the SNPRM is discussed below.

A. Safety of Infants

Infants in rear-facing child safety seats (RFCSS) and in convertible child restraints in the rear-facing mode are at significant risk from deploying air bags, since the rear-facing orientation of the child seat places their heads extremely close to the air bag cover. This is why we emphasize that infants in these restraints must never be placed in the front seat unless the air bag is turned off. While the current warning labels and educational campaigns have dramatically reduced the number of fatalities to infants over the past two years, we recognize that there are still some parents who ignore this advice and place their children at grave risk from a deploying air bag. SCI data shows that some infant fatalities have occurred because parents did not place their child in a RFCSS properly.

In the SNPRM, in order to address the risks air bags pose to infants in child restraints designed to be used by them, we proposed two alternative test requirements, the selection of which would be at the option of the manufacturer. The two manufacturer options were: (1) Test requirements for an automatic air bag suppression feature or (2) test requirements for low risk deployment involving deployment of the air bag in the presence of a 12-month-old Child Restraint Air Bag Interaction (CRABI) dummy in a RFCSS or convertible child restraint in the rear-facing mode.

1. Option 1: Feature (*e.g.,* Weight or Size Sensor) That Suppresses the Air Bag When an Infant Is Present

We proposed that if the automatic suppression feature option were selected, the air bag would need to be suppressed during several static tests using, in the right front passenger seat, a 12-month-old child dummy in child restraints designed to be used for infants. The restraints would be placed in several specified positions during the static tests. Manufacturers would be required to assure compliance using any of the child restraints included in sections B and C of the list of representative child restraints that we proposed to add as an appendix to Standard No. 208, as well as the car bed listed in section A. The list would be periodically updated to reflect changes in the types and designs of available child restraints.

In order to ensure that the suppression feature did not inappropriately suppress the air bag for small-statured adults, the air bag system would need to be activated during several static tests using a 5th percentile adult female dummy in the right front passenger seat. At the option of the manufacturer, human beings could be used in the place of the 5th percentile adult female dummy. We proposed to permit manufacturers to use human beings in light of concerns that current dummies may not be sufficiently human-like to be recognized by some of the advanced technologies under development. The issue of permitting manufacturers to certify to suppression requirements using human beings is discussed in greater detail later in this notice.

AAM, GM, Toyota, Isuzu and DaimlerChrysler all argued in their comments that the static suppression tests to protect infants were too burdensome, notwithstanding our reduction of the number of child restraints that the agency would use in compliance testing. Concerns were raised in particular about the range of seat back angles and seat track positions, as well as the placement of a blanket on the restraints and testing with the handle and sunshield in a full-up and full-down position. The commenters also recommended that they only be required to assure compliance using a limited number of restraints in each section of the appendix (between one and three). Isuzu further argued that tests should only be conducted with belted restraints. Most of these arguments were repeated in comments on suppression testing for the 3-year-old and 6-year-old children.

David Breed and IEE offered comments on the technology available for the static suppression systems. David Breed argued that the testing of convertible infant seats in a forward-facing mode would effectively eliminate the low risk deployment option for older children because manufacturers would be forced to rely on a weight-sensing system. According to that commenter, such a restriction could lead to safety trade-offs for older children who could benefit from a benignly deploying air bag.

IEE argued that by testing suppression systems with a variety of child restraints, we are encouraging the use of discriminating systems rather than a non-discriminating system like a universal tag. IEE asserted that the non-discriminating systems are significantly more reliable than any discriminating systems currently available. The possibility that a non-discriminating system, like the Mercedes Baby-Smart, could easily resolve problems with suppression technology was echoed by DaimlerChrysler.

We note that testing performed by NHTSA at VRTC subsequent to publication of the SNPRM demonstrated that it is difficult to place some child restraints usable by infants in several of the proposed positions in some circumstances.

The first such position is testing the unrestrained child restraint at any angle plus or minus 45 degrees from the vehicle seat's longitudinal plane. While achieving this position may be possible in vehicles that do not have contoured seats, in several of the vehicles we examined, the RFCSS flipped toward the center of the seat. As a practical matter, we do not believe parents or caregivers are likely to place a child restraint on the seat at a 45 degree angle. We believe the restraint would be placed roughly along the longitudinal plane, facing either the seat back or the

windshield. Accordingly, we have revised this test procedure to specify placement only at zero degrees of the longitudinal plane.

The proposed position which specified that the restraint be tipped to rest on the dashboard was also difficult to achieve. The intent behind the test was to mimic a situation where, through pre-crash braking, a child restraint slides forward and flips onto the dashboard. Our SCI investigations have reported several instances where this type of movement has occurred, with devastating consequences for the child in the child restraint.

However, this position does not test a condition for which static suppression systems are designed. Rather, such a position is one that would be appropriate as the final position in a test of a dynamic suppression system. We believe static suppression systems should be designed to classify occupants and to address positions where parents or caregivers place infants under normal driving conditions. It is exceptionally unlikely someone would drive with an infant's head wedged between the dashboard and the child restraint. We note, however, that the likelihood of a static suppression system failing to protect an occupant who slides into the proposed position during a crash is extremely remote since static suppression systems will either be set once the engine is turned on and not change regardless of the circumstances of the crash, or will have a cycling function in which the presence of the child seat will be read periodically, allowing a time history of the child seat position. Additionally, the presence of a child seat that is precariously placed on the edge of the vehicle seat would likely be construed as an empty seat. Most manufacturers have indicated that their systems will default to a no-fire condition if the sensing system perceives that the vehicle seat is unoccupied. Finally, this position would not test a static suppression system in an objective manner, as evidenced by the difficulties we experienced in placing the infant seat in the proposed position. Accordingly, we have eliminated this test requirement.

The third condition which proved problematic in some instances was placement of the restraint with the vehicle seat in its full forward position. In smaller vehicles, the restraints often could not be placed in the front seat with the seat full forward. This was a particular problem with convertible restraints, which can be considerably larger RFCSSs. In some instances, the restraint hung suspended between the dashboard and the seat back. In other cases, the restraint had to be positioned at a severe angle in order to achieve contact with the seat cushion. Again, we do not believe parents or caregivers are likely to place a child restraint in a position where the restraint either tips forward onto the seat or where the restraint does not make any contact with the seat. Changes to the test procedures to account for this situation are discussed below.

Toyota and GM argued that the proposed requirements specifying testing of the restraints at any seat track position and at any seat back angle between the nominal design position and 25 degrees rearward would require up to 40,000 different tests to assure compliance. We believe this argument severely overstates the situation. As long as the restraint fits in the vehicle interior, a suppression system that is entirely seat-based will be able to discriminate the presence of the restraint, regardless of the seat track position. Likewise a seat-based system will be able to detect the restraint regardless of whether the sunshield or handle is in an upright or stowed position or whether the restraint has a blanket on it.[23] Systems that could have difficulty detecting these different conditions are those which have sensors that are not completely incorporated into the seat. Such systems will need to be able to detect where the restraint is located in the vehicle and whether there are any potential impediments to accurately sensing the presence of an infant, like a sunshield, handle or blanket. However, these systems' ability to detect a sunshield, handle, or blanket should not be affected by the belted, or unbelted, condition of the child restraint.

In view of the fact that parents or caregivers who continue to place infants in the front seat may position the vehicle seat in a variety of seat track positions, we continue to believe that there is a need to test suppression systems in a variety of seat track positions. However, we have also concluded that testing the systems at discrete points along the seat track should be sufficient to ensure adequate performance throughout the entire range of seat track positions. Therefore, we have decided to specify test requirements for suppression technology at the vehicle seat's full-rear position, mid-track position and full-forward position. If the child restraint strikes the instrument panel or another portion of the vehicle interior when the seat is in the full-forward position, the vehicle seat will be moved back to the next detent that allows for clearance, or, in the case of automatic seats, until a maximum of 5mm (0.2) of clearance is achieved. A more complete discussion of this issue is provided later in this document.

Finally, we determined that conducting tests using a belted child restraint with the vehicle seat back 25 degrees rearward of the seat back's nominal design position for the 50th percentile adult male was not always possible. As discussed later in this document, we have decided to limit the vehicle seat back angle for the infant suppression tests to the nominal seat back design position for the 50th percentile male.

We have decided against allowing manufacturers to certify to only a limited number of the seats listed in the appendix. The number of applicable seats has already been honed down considerably from what was proposed in the NPRM. A further reduction could effectively allow manufacturers to design suppression systems that would not protect infants in child restraints representing a reasonable range of such restraints on the market.

We have also decided to retain those test conditions involving unbelted restraints. Unfortunately, not everyone always installs child restraints (including RFCSSs) properly, as indicated by several fatalities in our SCI database. If we failed to test in unbelted conditions, suppression systems could be designed so that they only worked when the seat belt was fastened. Such a system could not protect these infants.

While we understand David Breed's concern about testing convertible restraints in a forward-facing position, this test requirement is necessary and need not preclude low risk deployment for older children. As an initial matter, current air bag designs pose a risk to infants seated in forward-facing convertible child restraints, as indicated by the SCI data. However, advanced designs which eliminate that risk could still be used, even if a manufacturer chose to suppress the air bag for infants in these restraints. For example, we believe manufacturers could design a system that suppressed the air bag based on weight and pattern recognition that is limited to the expected weights of very young children and child restraints designed for use by infants. It is possible

[23] We note that seat-based systems may, however, need to ''read'' the presence of a rear-facing infant restraint that has been stabilized with a rolled up towel or blanket in accordance with the restraint manufacturer's instructions. While we will not use such objects in conducting our compliance tests, the presence of a towel or blanket under the most rearward portion of the child restraint is a real world scenario which some seat-based systems may need to accommodate.

that in some instances this technology could also suppress for a slightly older child in a convertible child seat. However, the manufacturer could also design the air bag system to deploy at a level that is non-injurious to a small child. Certification could be based on the low risk deployment test, and the potential suppression for the older child would provide supplemental protection.

IEE and DaimlerChrysler may be correct that non-discriminating, tag-like systems could offer greater reliability than discriminating systems, assuming that the correct tagged child restraint is also used. However, such systems would not ensure safety for the numerous different child restraint designs and potential restraint positions that are used by the general public. Even making tags widely available, as DaimlerChrysler suggests, would not account for those individuals who do not have a tag on their particular child restraint, either because the restraint is not generally used in a given vehicle, or because they are unaware that the tags are available. Additionally, simply providing the tags would not assure that they were installed on the restraint properly or that the tag was properly aligned when the restraint was set in the vehicle seat.

Technology like the Mercedes BabySmart appears to provide a reliable method of preventing air bag deployments when used properly. While we do not believe that these types of suppression systems alone will adequately meet the needs of motor vehicle safety, we do believe that they remain an excellent supplement to other systems.

Further, belted tests conducted with child restraints that have the lower anchor attachments will need to be conducted both with the vehicle safety belt and, in vehicles with the corresponding anchors, with the attachments secured in the anchors with the safety belt unfastened. Such a requirement is necessary for various reasons. First, the anchors may fail to place sufficient weight on a seat to adequately test a suppression system. Second, a parent may fail to use the anchor system and use the belt system instead. Third, using a belt with the anchor system could result in damage to the system when the safety belt is cinched to 134 N (30 lb). Finally, the anchor attachments may prevent alignment of the child restraint along the defined vertical planes in low risk deployment tests. We note that Standard No. 213 does not contemplate seating systems where both the safety belt and the lower anchor attachments are used.

2. Option 2: Low-Risk Deployment for Infants in Rear-Facing Child Safety Seats

We proposed to require that, if the low risk deployment option were selected, a vehicle would be required to meet specified injury criteria performance limits when the passenger air bag is deployed in the presence of a 12-month-old CRABI dummy placed in a belted rear-facing child restraint, either a RFCSS or a convertible restraint. As with the proposed test requirements for the suppression option, manufacturers would be required to assure compliance using each child restraint included in sections B and C of the proposed list of representative child restraints, although not with the car bed identified in section A.

In the case of air bags with multiple inflation levels, the injury criteria performance limits would need to be met for any stage or combination of stages which may deploy in the presence of an infant in a rear-facing position in one of the listed restraints in a rigid barrier crash test at speeds up to 64 km/h (40 mph). Our intent was to cover all stages of inflation that could deploy in the presence of an infant in such a restraint.

TRW stated that the requirement that the air bag deploy at the highest output is inconsistent with low risk deployment. That company stated that this will force manufacturers to employ automatic suppression technologies. TRW stated that NHTSA's analysis shows little incremental benefit to children from the addition of suppression technologies. That company stated that NHTSA's analysis also ignores potential for reduction in protection for adult occupants. TRW argued that we should revisit the low risk option.

TRW also stated that if we do not revisit the low risk option, the final rule should be changed to accommodate unresolved technical issues with suppression technologies. That company stated that it has tested various suppression technologies with respect to their ability to classify accurately the proposed range of seating positions and seat belt cinching loads on the specified lists of car seats with pure weight and/or pattern sensing and found problematic issues with each technology.

DaimlerChrysler stated that it does not see any justification for running the threshold compliance test for low risk deployment at 64 km/h (40 mph). That commenter stated that since other test requirements are proposed at a maximum of 48 km/h (30 mph), this test should be run at 48 km/h (30 mph) also. DaimlerChrysler also argued that the proposed threshold compliance test was impracticable because it specified that testing could be conducted with child seats in any of the possible positions used for the suppression tests. That company stated that this would mean that five crashes would have to be performed for each child restraint on the list.

After considering the comments, we continue to believe that it is appropriate to require vehicles that are certified to the low risk deployment option for infants to satisfy the injury criteria for all stages of inflation that could deploy in the presence of an infant in a rear facing restraint. As we discussed in the September 1998 NPRM, a child in such a restraint would be extremely close to the passenger air bag in any crash, regardless of crash severity. This is not the case with persons in any other risk group. Moreover, manufacturers have been working on suppression devices for this risk group for the longest time, since this was the first risk group that was identified. Since suppression is available for this risk group and since there are no known benefits from deploying an air bag for this group, it is appropriate to expect advanced air bags to essentially eliminate risk of serious injury or fatality resulting from air bag deployment to infants in RFCSS. There is no reason to permit continued use of systems that place infants at significant risk of serious injury or death from the air bag in crashes of any severity level.

We do not believe that any reduction in safety to adults will occur from suppressing the passenger air bag for infants in RFCSS. While suppression of the passenger air bag for older children may raise the issue of a ''gray zone'' that could affect some adults, we do not believe that will be relevant to infant suppression technology.

We originally proposed to require low risk deployment for all stages of the air bag that may deploy in a crash. The modified proposal to which DaimlerChrysler objects was an effort to accommodate systems which might be designed to always provide a lower level of deployment in the presence of a rear facing restraint, regardless of crash severity.

We disagree with the argument that the proposed test procedure is impracticable. Because the low risk deployment test is only conducted in the presence of a belted child restraint, a manufacturer that designed a system that always provided a lower level of deployment in the presence of a rear facing restraint could determine what

level would deploy in a barrier crash test by means other than conducting barrier tests, *e.g.,* by testing the sensor system that determined whether such a restraint was present.

We note that we specified a barrier crash test at a speed up to 64 km/h (40 mph) because some manufacturers may adopt a threshold higher than 48 km/h (30 mph) for deploying the highest level of inflation for the belted condition. Since these restraints are ordinarily belted, a speed higher than 48 km/h (30 mph) is needed to ensure that we cover all stages of inflation that could deploy in the presence of an infant in such a restraint.

B. Safety of Young Children

Young children are at special risk from air bags because, when unbelted, they are easily propelled close to the air bag as a result of pre-crash braking. Their small size, weight and strength also makes them more vulnerable to injury when interacting with a deploying air bag. We strongly recommend that children through age 12 ride in the back seat, because the back seat is safer, whether or not a vehicle has air bags.

In the SNPRM, in order to address the risks air bags pose to young children who do ride in the front seat, we proposed requirements using both 3-year-old and 6-year-old child dummies. We proposed three alternative test requirements, the selection of which would be at the option of the manufacturer. Manufacturers could select different options for the 3-year-old and 6-year-old child dummies.

The three manufacturer options were: (1) Test requirements for a feature that suppresses the air bag when a child is present, *e.g.,* a weight or size sensor; (2) test requirements for low risk deployment involving deployment of the air bag in the presence of out-of-position 3-year-old and 6-year-old child dummies, and (3) test requirements for a feature that suppresses the air bag when an occupant is out of position.

1. Option 1: Feature (*e.g.,* Weight or Size Sensor) That Suppresses the Air Bag When a Child Is Present

Our proposed requirements for an air bag suppression feature (*e.g.,* weight or size sensor) that suppresses the air bag when a child is present were similar to the ones we proposed with respect to a suppression feature for infants. We proposed that if this option were selected, the air bag would need to be suppressed during several static tests using, in the right front passenger seat, a 3-year-old or 6-year-old child dummy. The child dummy would be placed in several specified positions during the static tests. Manufacturers would be required to assure compliance using every child restraint appropriate for a given dummy size included in the proposed list of representative child restraints. The air bag system would be required to be activated during specified tests using a 5th percentile adult female dummy.

We proposed to allow manufacturers to comply with and certify to these suppression requirements using children, instead of 3-year-old and 6-year-old child dummies. Adult females could also be used in the place of 5th percentile adult female dummies for the portions of those test requirements which make sure that the air bag system is activated for adults.

We proposed to permit manufacturers to use human beings to check suppression features in light of concerns that current dummies may not be sufficiently human-like to be recognized by some of the advanced technologies under development. For example, suppression devices that work by sensing the distributed weight pattern of a human being may not recognize the pattern of a test dummy. If a manufacturer selected this option, the suppression requirements would need to be met at each of the relevant positions for any human being within a specified weight/height range for 3-year-old and 6-year-old children, and the air bag system could not be suppressed for any human being within a specified weight/height range for 5th percentile adult females.

In the SNPRM, we emphasized that these tests simply involve a child or adult assuming specified positions in the vehicle, with a technician checking (typically by looking at a light) whether the air bag would be suppressed or not; these tests do not involve deploying the air bag or moving the vehicle. To ensure absolute safety, we proposed to require manufacturers selecting this option provide a method to assure that the air bag would not deploy during testing; such assurance could be made by removal of the air bag. The manufacturer would also be required to provide a method to assure that the same test results would be obtained as if the air bag had not been deactivated or removed.

By and large, the comments in response to this proposed requirement mirrored those already discussed under static suppression features for infants; *i.e.,* there are too many child restraints, too many angles and too many seat track positions. Additional concerns were voiced about the requirement that child restraints be cinched at a force up to 134 N (30 pounds). Additionally, TRW stated that the task of discriminating between a child weighing up to 66 pounds and a 110-pound adult, while seemingly trivial, becomes more difficult when one takes into account the addition of child seats and seat belt cinching loads.

For the reasons set forth in the prior discussion of the suppression tests for infants, we have decided to conduct tests with the vehicle seat in the full-rear, mid-track and full-forward positions. If the dummy, the child restraint, or the child's legs interfere with the instrument panel or other portion of the vehicle interior in the full-forward position, the vehicle seat will be moved back to the next detent that allows for clearance, or, in the case of automatic seats, until a maximum of 5mm (0.2 in) of clearance is achieved.

Likewise, the seat back angle will be the manufacturer's nominal design position for the 50th percentile male for all tests, including the test with the 5th percentile adult female, except the tests where the child is sitting on the seat and leaning against the seat back (S22.2.2.2 and S24.2.1). A fuller discussion of seat back angle is provided later in this document.

One test position for the 3-year-old child that we have modified is the position where the child is lying on the seat. While conducting tests at VRTC, we discovered that this position was problematic in vehicles with no middle seating position. The 3-year-old test dummy cannot assume a full fetal position in these vehicles. Accordingly, in our tests the dummy's legs and feet were not in contact with the passenger seat. We do not believe that the position needs to be included in the test matrix for a vehicle without a middle seating position because a child would not lie in this position for any length of time. However, in vehicles with a bench seat or with convertible bench seats, where the console can be converted into a middle seat, this position is a likely real world position. Accordingly, we have specified tests for this position only in vehicles with three designated seating positions in the front seat.

We have also dropped the static suppression tests with the 3-year-old and 6-year-old child dummies in the positions specified for the low risk deployment tests. Like the infant test where the child seat was flipped on to the instrument panel, we believe that these positions do not test a condition for which static suppression systems are designed; they are more appropriate as part of a dynamic suppression system that follows the trajectory of an occupant during a crash. Additionally,

we believe that any system that suppresses when the dummy is sitting on the edge of the seat with its spine vertical, a condition that is still required for both the 3-year-old and the 6-year-old, will respond no differently from when the dummy is placed in either of the low risk deployment options. Thus, even if the dropped tests did represent a position for which static suppression systems are designed, they would likely be redundant.

Numerous comments were received regarding the cinching procedures for safety belts on child restraints. We have decided to keep the up-to-134 N (30 lb) requirement. Belt systems that cannot be cinched up to this level of force will be cinched at as high a level as possible. In our testing at VRTC, we found that a 134 N (30 lb) tension can be easily achieved. While we continue to caution adults to place their children in the back seat whenever possible, a parent or caregiver who places a child in the front seat should be able to do so as safely as possible without shutting off any available suppression technology. We regularly encourage people to have their child restraints installed by individuals who have been trained to install these restraints properly. We also encourage parents to secure a child seat in a manner that eliminates slack between the restraint and the vehicle seat. We believe that it is appropriate to use a cinching level that can be achieved by an individual who knows how to properly install child restraints. However, we do agree with the commenters that the up-to-134 N (30 lb) tension range is inappropriate for belt-positioning booster seats, since a child could not sustain that amount of belt tension, even if it were possible to achieve with a test dummy. We are specifying that these restraints be installed, and that belts be used, in accordance with the restraint manufacturer's instructions.

Since the 6-year-old child dummy is not tested in child restraints other than booster seats, we believe that the majority of the manufacturers' concerns about the suppression-activation ''gray zone'' are largely resolved. The 6-year-old child dummy weighs only 23.4 kg (51.6 lb). Likewise, the weight range for the six-year-old child who can be used for compliance testing has an upper parameter of 25.6 kg (56.5 lb). Because of constraints in Standard No. 213, booster seats generally do not weigh more than 4.5 kg (9.9 lb). Accordingly, the combined weight of the child or dummy and the booster seat should still be significantly below the weight at which suppression systems will assure that air bags are activated to protect adult occupants. As discussed earlier, vehicles with child restraint anchors will need to be tested both with and without any available child restraint anchor attachments secured to the passenger seat.

2. Option 2: Low-Risk Deployment for Young Children

We proposed to require that, if the low risk deployment option were selected, a vehicle would be required to meet specified injury criteria performance limits when the passenger air bag is deployed in the presence of out-of-position 3-year-old and 6-year-old child dummies. We proposed that the test be conducted at two positions which tend to be ''worst case'' positions in terms of injury risk. In one of these positions, the dummy's chest is on the instrument panel; in the other, the dummy's head is on the instrument panel. We proposed more detailed positioning procedures for these two tests than for many of those proposed for the static suppression tests, since injury measures may vary considerably with position. Under our proposal, in the case of air bags with multiple inflation levels, the injury criteria would need to be met only for the levels that would be deployed in lower severity crashes; *i.e.,* the levels that would be deployed in crashes of 29 km/h (18 mph) or below.

As discussed earlier in this document, some commenters, including AAM and Toyota, argued that the combination of testing for low risk deployment for inflation levels that would be deployed in crashes of 29 km/h (18 mph) or below and testing to ensure protection in unbelted rigid barrier tests beginning at that same speed would limit design flexibility and discourage manufacturers from selecting the low risk deployment option. The reason for this is that the manufacturers claim it is difficult to design dual stage air bags that could both meet the low risk deployment requirements *and* the barrier crash test injury criteria, particularly given the gray zone in which either a low level or high level deployment may occur.

On a separate but related issue, AAM recommended that the crash test to determine the air bag deployment level to be used for the low risk deployment test be conducted with a belted dummy matching the size for which the low risk option is certified. AAM stated that this would allow manufacturers to utilize an occupant detection system to govern the deployment that would be used for the low risk deployment test.

TRW stated that the proposed injury criteria performance limits will make it very difficult to employ the low risk deployment option except in vehicles with unique geometry. That commenter stated that this would force the automobile manufacturers to employ suppression technologies.

After considering the comments, we are adopting the proposed low risk deployment tests using 3-year-old and 6-year-old child dummies, with two modifications. First, the positioning procedures for one of the out-of-position tests has been significantly simplified. A fuller discussion of the reason for this change is provided later in the document. Secondly, in order to avoid inadvertently discouraging the development of low risk deployment technologies, the injury criteria will need to be met, in the case of air bags with multiple inflation levels, for the levels that would be deployed in crashes of 26 km/h (16 mph) or below, as well as the relative timing of the multiple inflations, instead of crashes of 29 km/h (18 mph) or below. However, if the air bag did not deploy at all in crashes of 26 km/h (16 mph) or below, the injury criteria will need to be met using the lowest level of inflation.

We believe that this change, coupled with the one discussed earlier in this document to increase the lower end of the range of speeds for which the unbelted rigid barrier test is conducted from 29 km/h (18 mph) to 32 km/h (20 mph), will facilitate use of the low risk deployment option. As discussed earlier in this document, low risk deployment offers potential benefits over suppression, especially for children older than six years, and we wish to facilitate that option to the extent consistent with safety need. We also note that if manufacturers certify compliance for all levels of inflation that occur in crashes of 26 km/h (16 mph) or below, the same low risk levels of inflation are likely to occur in crashes slightly above that speed.

We are not adopting AAM's recommendation to specify that the crash test to determine the air bag deployment level to be used for the low risk deployment test be conducted with a belted dummy matching the size for which the low risk option is certified. The final rule specifies that this crash test be conducted with an unbelted 50th percentile adult male dummy in the mid-track seat position. An out of position occupant, by definition, would always be unbelted. Determining the level of inflation with belted occupants would allow manufacturers to place technology in a vehicle that would meet the low risk deployment test requirements, but would not adequately protect for the condition that is experienced in the real world.

Additionally, while we are only testing the low risk deployment technology on the passenger side with three-year-old and six-year-old child dummies, a benign deployment in low speed crashes could provide ancillary benefits to larger occupants. We are concerned that using the child dummies to determine which stage or combination of stages of the air bag to deploy could unnecessarily limit the benefits of low risk deployment air bags.

As to TRW's concern that the injury criteria performance limits make it difficult to comply with the low risk deployment option, we wish to ensure that low risk deployment air bags truly are low risk. Thus, the injury criteria limits must be set at a stringent level.

3. Option 3: Feature that Suppresses the Air Bag When a Child Is Out-of-Position

As discussed in previous notices, we believe that a feature that suppresses the air bag when an occupant is out of position, either initially or because of moving into such a location during pre-crash braking, needs to be tested very differently from one that suppresses the air bag whenever a child is present. While various static tests can be used to determine whether the latter type of suppression device is effective, they would be of limited utility in testing a feature that suppresses the air bag when an occupant moves into an out-of-position location. This is because one of the key criteria in determining whether the dynamic out-of-position suppression feature is effective is timing; *i.e.,* whether the feature works quickly enough in a situation where an occupant is propelled out of position as a result of pre-crash braking (or other pre-crash maneuvers). We accordingly developed separate requirements for such dynamic suppression devices.

The development of requirements for dynamic suppression devices posed special problems, however. While much work is currently being done on the development of dynamic automatic suppression systems (DASS), the technology is still not mature. In addition, a number of different technologies are currently being considered. Each of these technologies has particular attributes which affect the appropriateness of the means used to evaluate its performance. Given these factors, we were unable to develop a complete set of performance requirements and test procedures that would be appropriate for the range of potential DASS designs.

Accordingly, we proposed to establish very general performance requirements for DASS and a special expedited petitioning and rulemaking process for considering procedures for testing advanced air bag systems incorporating a DASS. Target time limits for each phase of such a rulemaking were proposed. Anyone wishing to utilize such advanced air bags could develop test procedures for demonstrating the compliance of their particular DASS with the performance requirements and submit those test procedures to the agency for our consideration. If we deemed it appropriate to do so after evaluating the petition, we would publish a notice proposing to adopt the test procedure. After considering those comments, we would then decide whether the procedure should be added to Standard No. 208. If we decided to do so, and if the procedure were suitable for the DASS of any other vehicles, then the procedure could be used by the manufacturers of those vehicles as well as by the petitioner. We noted that we intended to minimize the number of different test procedures that are adopted for DASS and to ensure ultimately that similar DASS are tested in the same way.

Comments regarding DASS indicated general support for our proposal. Commenters addressing issues related to the DASS proposal included two manufacturers, DaimlerChrysler and GM, five suppliers, ASCI, Autoliv, Breed Technologies (Breed), Delphi and TRW, two trade groups, AORC and AAM, a public interest group, the Center for Regulatory Effectiveness (CRE) and one private individual (JCW). With one exception, JCW, all commenters agreed that the DASS requirements and test procedure proposed in the NPRM were unworkable and must be abandoned. Two commenters, Breed and ASCI, propounded the use of a sled test and disagreed with our judgment that development of a practical test procedure for evaluating DASS-equipped vehicles is not presently feasible.

Several commenters voiced strong reservations regarding the DASS proposal we put forth in the SNPRM. JCW objected to the elimination of the DASS out-of-position requirements. JCW argued that without some form of suppression to protect people who are in the immediate vicinity of an air bag because of pre-crash braking, the safety potential of advanced air bags will be lost. Breed and ASCI stated that sled tests which accurately reproduce the movements of unrestrained occupants in pre-crash braking are currently available and should be used as a compliance test for DASS systems.

One matter mentioned by a number of commenters concerned the confidentiality of information provided by petitioners seeking adoption and approval of a DASS compliance test procedure. AORC and AAM urged us to consider that manufacturers would be deterred from investing in DASS systems if the specifics of their proprietary technologies were published and made available to the public and to competitors. AAM suggested that this issue might be addressed by not requiring that the identity of the petitioner and the particular automobiles where a DASS system is to be installed be revealed to the public during the course of the petition and review process. Delphi and Autoliv contended that the proposed DASS petition procedures required the submission of too much proprietary information. In particular, Autoliv objected to the proposed requirements that petitioners must furnish a complete description and explanation of a DASS system and a complete description of the logic used by that system. CRE suggested that the only materials that need to be made public during the petition process are those that would allow for comment on the proposed test procedure and not on the specifics of the DASS system at issue. The organization strongly recommended that our final rule emphasize that the ''proposed rule'' that is being offered for public comment would consist only of a proposed test procedure that would not include the details of the technology used or the data submitted in support of the proposed test procedure.

In addition to concerns about confidentiality, a number of commenters offered remarks about the expedited rulemaking procedure we proposed for DASS systems. Several commenters requested that the expedited procedures proposed for DASS systems be expanded to include all advanced air bag technologies. Autoliv, DaimlerChrysler, Breed, AORC and Delphi also suggested that the expedited rulemaking procedure be expanded to allow the use of new technologies in areas other than dynamic suppression systems. In regard to the timing of the proposed procedure, AAM suggested that we adopt a procedural timetable similar to that already used for evaluating the adequacy of anti-theft devices under 49 CFR Part 543. AORC and CRE urged us to expedite the regulatory approval process to the maximum extent possible. CRE also suggested that notice and comment could be eliminated altogether. If, CRE contends, initial DASS rulemakings do not stimulate any substantive comments by the public, we

would then be in a position to dispense with traditional notice and comment as the procedure would be superfluous.

One commenter, GM, voiced substantial concerns about the effect that initial DASS rulemakings would have on subsequent petitions. In GM's view, the first successful DASS petitioner will define a large number of important conditions for DASS testing and test procedures. GM believes that there will be a very strong incentive for others in the industry to conform to the existing test procedure rather than develop a new or different technology, particularly because subsequent petitioners will face additional burdens in demonstrating that an existing DASS test cannot be used. GM urged us to use the traditional rulemaking process for the initial DASS petitions and provide adequate time for comment on any DASS proposal.

After review of the comments received in response to the SNPRM, we are adopting the proposal with few modifications. We have not been presented with, and are not aware of, any information indicating that any feasible test procedure now exists for a DASS system. We are also declining to expand the scope of the expedited petition process to other areas of Standard No. 208. Unlike other air bag technologies, DASS technology is still in the early stages of development. Other technologies are more mature, and developments within these areas may be adequately addressed through traditional rulemaking procedures.

The final rule makes several modifications to address confidentiality concerns. As the identity of the supplier or manufacturer would not be relevant to the evaluation of a test procedure and performance standard, we have modified section 552.13(e) to clarify that if a petitioner desires to have its identifying information withheld from public disclosure, it may request that the agency do so pursuant to 49 CFR Part 512. We have determined that the requirements outlined in section 552.14(b)(1) could be construed as demanding that all details of any algorithms and/or system logic be provided to the agency. Accordingly, the final rule provides that the description of the system logic may be limited to a flow chart or similar materials outlining the function of the system. We also wish to emphasize that pursuant to Part 512, petitioners may submit both confidential and non-confidential versions of their petitions and accompanying materials. These materials may include test films, printouts and similar data.

The final rule also makes slight modifications to the procedural timetable for the petition process. In order to alleviate the concerns raised by the precedential effect of the initial DASS petition, we have specified an extended comment period for such a petition. Section 552.15(c) of the final rule provides that we expect to employ a 30-day comment period in a DASS test procedure rulemaking. However, in the case of an initial petition or a petition raising particularly novel issues, we may provide 60 days for comments. Offering an extended comment period will provide interested parties with additional time to evaluate the proposed test procedure and its implications, particularly in regard to suitability for other DASS concepts or designs under development.

We disagree with the argument that without some form of suppression to protect people who are in the immediate vicinity of an air bag because of pre-crash braking, the safety potential of advanced air bags will be lost. DASS systems represent one approach to minimizing air bag risks. As discussed elsewhere in this document, other approaches include deploying the air bag in a manner that does not cause harm and other types of suppression systems; *e.g.,* suppressing the air bag when children are present.

C. Safety of Teenage and Adult Drivers

Out-of-position drivers are at risk from air bags if they are extremely close to the air bag at the time of deployment. While any driver could potentially become out of position, small-statured drivers are more likely to be positioned on top of the air bag because they generally sit closer to the steering wheel than larger drivers.

In the SNPRM, in order to address the risks air bags pose to out-of-position drivers, we proposed requirements using 5th percentile adult female dummies. We proposed two alternative test requirements, the selection of which would be at the option of the manufacturer.

The manufacturer options proposed in the SNPRM were similar to those using 3-year-old and 6-year-old child dummies, with one significant exception. Since air bags provide safety benefits to small-statured drivers, it would not be appropriate to permit manufacturers to suppress air bag deployment under all conditions in the presence of such occupants. Therefore, this type of suppression feature would not be permitted.

The two manufacturer options proposed in the SNPRM were: (1) test requirements for low risk deployment involving deployment of the air bag in the presence of out-of-position 5th percentile adult female dummies, and (2) test requirements for a feature that suppresses the driver air bag when the driver is out of position.

1. Option 1: Low-Risk Deployment for Drivers

We proposed to require that, if the low risk deployment option were selected, a vehicle would be required to meet specified injury criteria performance limits when the driver air bag is deployed in the presence of an out-of-position 5th percentile adult female dummy. We proposed that the test be conducted at two positions which tend to be ''worst case'' positions in terms of injury risk. In one of these positions, the dummy's chin is on the air bag module; in the other, the dummy's chin is on the upper rim of the steering wheel. We proposed detailed positioning procedures for these two tests, since injury measures may vary considerably with position.

Under our proposal, in the case of air bags with multiple inflation levels, the injury criteria would need to be met only for the levels that would be deployed in lower severity crashes; *i.e.,* the levels that would be deployed in crashes of 29 km/h (18 mph) or below. A driver would most likely be extremely close to the air bag in lower severity crashes, following pre-crash braking.

The comments on the low risk deployment requirements for small drivers were similar to those on the requirements for young children. Our response is also similar.

We are adopting the proposed low risk deployment tests using the 5th percentile adult female dummy, with the same modifications we made for the tests using child dummies; *i.e.,* simplified positioning procedures will be used, and injury criteria will need to be met, in the case of air bags with multiple inflation levels, for the levels and timing that will be deployed in crashes of 26 km/h (16 mph) or below, instead of crashes of 29 km/h (18 mph) or below, using unbelted 5th percentile adult female dummies. However, if the air bag did not deploy at all in crashes of 26 km/h (16 mph) or below, the injury criteria will need to be met at the lowest level of inflation. This modification will help facilitate low risk designs. Likewise, we are requiring the use of an unbelted 50th percentile adult male dummy seated in the mid-track seat position in the crash test used to determine which stage or combination of stages to fire for the low risk deployment tests. Our rationale for this requirement is the same as for the

passenger side: larger occupants should not be deprived of ancillary benefits from more benign air bags in low speed crashes.

2. Option 2: Feature that Suppresses the Air Bag When a Driver Is Out-Of-Position

The testing of DASS devices for the driver air bag raises the same issues as testing ones for passenger air bags. In the SNPRM, we proposed the same type of requirements for both systems.

The comments on the SNPRM were essentially the same for both types of DASS devices. The issues raised by the commenters are fully discussed under our discussion of DASS devices for passenger air bags, presented earlier in this document.

IX. Injury Criteria

In the SNPRM, we proposed injury criteria and performance limits for each size dummy. We placed in the public docket a technical paper which explained the basis for each of the proposed injury criteria, and for the proposed performance limits. The title of the paper was: ''Development of Improved Injury Criteria for the Assessment of Advanced Automotive Restraints Systems—II.''

Standard No. 208 currently specifies five performance requirements for the Hybrid III 50th percentile adult male dummy in barrier crash tests: (1) dummy containment—all portions of the dummy must be contained in the vehicle passenger compartment throughout the test, (2) Head Injury Criterion (HIC) must not exceed 1,000, evaluated over a 36 millisecond (msec) duration (3) chest acceleration must not exceed 60 g's, (4) chest deflection must not exceed 76 mm (3 inches), and (5) forces transmitted axially through the upper legs must not exceed 10 kilonewtons (kN) (2,250 lb).

In the SNPRM, we generally proposed to apply these or similar injury criteria, and a new one addressing neck injury, to all of the dummies and tests, other than static suppression tests, covered by the proposal. However, the criteria and performance limits would be adjusted to maintain consistency with respect to the injury risks faced by different size occupants.

A general discussion of the proposed injury criteria and performance limits, and the comments, is provided below. A more detailed discussion is provided in a supplemental technical paper titled ''Supplement: Development of Improved Injury Criteria for the Assessment of Advanced Automotive Restraint Systems—II'' which is being placed in the public docket.

A. Head Injury Criteria

In the SNPRM, to address the risk of head injury, we proposed limits for the head injury criterion (HIC) for the 50th percentile adult male, 5th percentile adult female, 6-year-old child, 3-year-old child and 12-month-old infant dummies.

The proposed HIC differed from that currently included in Standard No. 208 in that it would be evaluated over a 15 msec duration instead of 36 msec. This change was based on a recommendation by AAMA. That organization had recommended that the duration for the HIC computations be limited to 15 milliseconds with a limit of 700 for the 50th percentile adult male dummy. This proposed value is consistent with Canadian Motor Vehicle Safety Standard No. 208.

We noted in the SNPRM that the stringency of HIC 15/700 and HIC 36/1000 appears to be equivalent for long duration pulses. This is because while HIC 15 produces a lower numerical value for long duration events, its lower failure threshold, 700, compensates for this reduction. We also noted that for pulse durations shorter than approximately 25 milliseconds, the HIC 15/700 requirement is more stringent than the HIC 36/1000 requirement. We stated that we believed this increased stringency would provide a desirable added measure of safety for the highly scaled, short duration HIC limits proposed for evaluating those impact events where children and small-statured adults are involved.

In the SNPRM we accordingly proposed to employ a 15 millisecond time interval whenever calculating the HIC function and to limit the maximum response of the adult male to 700 and limit the response of the smaller dummies to suitably scaled maximums.

Commenters generally supported our proposal concerning HIC 15. However, AAM recommended that we adopt somewhat higher limits than we proposed for the 5th percentile adult female dummy (779 rather than 700) and the 6-year-old child dummy (723 rather than 700). That organization argued that we were not consistent in applying scaling relationships from the 50th percentile adult male dummy to the other dummies.

After considering the comments, we have decided to adopt the limits we proposed. We note that the data from which the HIC relationship was developed represented an elderly adult population.[24] There is no basis to assume that the population had the dimensions of 50th percentile adult males. We believe it is reasonable to apply the same 700 HIC limit to all persons who may be represented by the original data set, including 5th percentile adult females and 50th percentile adult males.

As to child dummies, in the absence of biomechanics data on the skull fracture and brain injury tolerances for children, we began by utilizing a scaling process to account for differences in both geometric size and material strength. However, after applying the scaling process, judgment must be used to determine if the scaled values are reasonable.

For the 6-year-old child dummy, geometric and material scaling led to a limit of 723, which is higher than the 700 limit for adult dummies. However, in the absence of biomechanical data that substantiate a higher head injury tolerance for young children than for adults, we believe it is prudent and reasonable to limit the HIC value to 700 for the 6-year-old dummy.

B. Neck Injury Criteria

In the SNPRM, to address the risk of neck injury, we proposed limits for the Nij neck injury criterion for the 50th percentile adult male, 5th percentile adult female, 6-year-old child, 3-year-old child and 12-month-old infant dummies. Nij is a new injury formula that accounts for the combination of flexion, extension, tension, and compression.

The sled test option in Standard No. 208 currently addresses the risk of neck injury by means of separate limits on these four measurements as well as shear. We proposed Nij as an improvement over separate limits because it accounts for the superposition of loads and moments, and the additive effects on injury risk.

The most significant comment on this issue came from AAM, which endorsed the Nij concept but recommended the inclusion of additional, more stringent tension/compression limits to independently control these potentially injurious loading modes. AAM also recommended further, minor adjustments to the proposed critical limits depending on whether they are being utilized for in-or out-of-position situations. AAM, IIHS, and NTSB stated that they were concerned that the peak tension and peak compression allowed by the Nij criteria when the moment value is zero are too great.

[24] Hodgson, V.R., Thomas, L.M., ''Comparison of Head Acceleration Injury Indices in Cadaver Skull Fracture,'' SAE Paper No. 710854, Proceedings of the Fifteenth Stapp Car Crash Conference, 1971.

We believe that there is merit in incorporating AAM's recommended additional tension/compression limits and adjustments to our original Nij proposals because they either mimic our originally proposed requirements very closely or add additional requirements that more stringently control potentially injurious loading modes. In addition, we accept an argument made by AAM that tensed neck muscles mitigate the effects of measured neck loads and will adopt that organization's recommendation for slightly higher neck limits for in-position testing for the adult dummies. However, because one would not expect muscle tensing in a situation simulated by the 5th percentile female out-of-position low risk deployment tests, we are requiring manufacturers to meet more stringent criteria for Nij in those tests.

DaimlerChrysler argued that tension should be the only neck injury criterion with the current Hybrid III dummy neck because it believes the neck may be inadequate for accurately assessing the potential for flexion/extension neck injury due to air bag loading. Toyota also recommended delaying the use of any neck injury criteria that contains extension. As discussed later in this document, we believe the current Hybrid III neck is adequate for the purposes of this rulemaking. Moreover, we are adopting Nij as the best available neck injury criterion.

C. Thoracic Criteria

In the SNPRM, to address the risk of thoracic injury, we proposed individual limits on chest acceleration and chest deflection. This is the same approach as is currently used in Standard No. 208. However, we proposed to reduce the current deflection limit for the 50th percentile male dummy from 76 mm to 63 mm (from 3 in to 2.5 in).

To obtain equivalent performance limits for the other size dummies, the mid-size male dummy limits were scaled, taking into account both geometric and material differences. We also considered other factors. We did not propose a chest deflection limit for the 12-month-old CRABI dummy because that dummy does not measure chest deflection.

AAM supported individual limits on chest acceleration and chest deflection but argued that the chest acceleration limit for the 5th percentile adult female dummy should be 73 g's rather than the 60 g's proposed in the SNPRM. This was reiterated by some other commenters as well.

AAM also requested slight adjustments in deflection limits for the 3-year old and 5th percentile adult female dummies. In addition, AAM recommended the use of an additional criterion, rate of sternal deflection, to assess the risk of serious thoracic organ injuries in out-of-position tests. Toyota recommended using the rate of sternal deflection in place of chest acceleration for assessing thoracic injury risk. DaimlerChrysler presented a method using Kalman filters which it argued would result in a more reliable rate of deflection measures using chest deflection and acceleration measurements.

After considering the comments, we are adopting the proposed 60 g's chest acceleration limit for the 5th percentile adult female dummy. AAM's recommended chest acceleration limit of 73 g's for this dummy was obtained using scaling procedures that only considered the effects of the geometric differences between 50th percentile adult males and 5th percentile adult females. However, we believe the additional effect of decrease in bone strength for the more elderly female population at risk in out-of-position situations should also be taken into account.

The differences between our proposed deflection limits and those recommended by AAM are negligible. AAM recommended a chest deflection limit of 64 mm for the 50th percentile adult male dummy. In order to harmonize with the chest deflection limits used by Transport Canada, we proposed a 63 mm for chest deflection limit for the 50th percentile male. While we used the same scaling factors as the industry, this difference in the limit for the 50th percentile adult dummy accounts for the small differences (<2mm) between the industry's recommendations and our proposals for some of the other dummies. Because these differences are negligible and because the proposed limit for the 50th percentile adult male dummy is consistent with international harmonization, we are adopting the limits proposed in the SNPRM.

As to AAM's recommendation to use the rate of sternal deflection to assess the risk of serious thoracic organ injuries in out-of-position tests, we believe further analysis and research would be needed before such a new injury criterion could be added to Standard No. 208. We note that vehicle manufacturers are free to voluntarily consider rate of sternal deflection as they design their vehicles.

D. Other Criteria

In the SNPRM, we proposed to apply a dummy containment requirement to all of the dummies except the 12-month-old infant dummy, and limits on upper leg forces to the 50th percentile adult male and 5th percentile adult female dummies. We believed the dummy containment requirement would not be relevant to the proposed low risk deployment test using the 12-month-old infant dummy, and that limits on upper leg forces would not be relevant to the proposed low risk deployment tests using the 12-month-old infant and 3- and 6-year-old child dummies.

More specifically, with respect to limits on upper leg forces, we proposed to limit the axial loads in the femur for the adult dummies (10 kN for the 50th percentile male and 6.8 kN for the 5th percentile female). AAM and DaimlerChrysler stated that they support slightly more stringent femur limits of 9.1 kN for the 50th percentile male and 6.2 kN for the 5th percentile female.

After considering the comments, we are adopting the axial femur limits for the adult dummies as proposed. The current limit of 10 kN specified for the 50th percentile male has been used in Standard No. 208 for many years. AAM has not presented information demonstrating that this value does not adequately ensure protection. Furthermore, AAM has not provided data or an explanation of the method it used to arrive at its recommended femur force limit for the 50th percentile male.

The differences between the limits proposed in the SNPRM and those recommended by AAM are small, and adopting the slightly lower value recommended by AAM will have no effect on the overall safety benefits. We also believe that the slightly higher axial force limits we are adopting today may provide design flexibility for manufacturers to optimize head, neck and chest protection for the 50th percentile male and the 5th percentile female. Of course, vehicle manufacturers are free to voluntarily meet more stringent limits than those included in Standard No. 208.

X. Lead Time and Effective Date

TEA 21 specifies that the final rule on advanced air bags must become effective in phases as rapidly as practicable beginning not earlier than September 1, 2002, and not sooner than 30 months after the issuance of the final rule, but not later than September 1, 2003. Except as noted below, the phase-in of the required amendments must be completed by September 1, 2005. If the phase-in of the rule does not begin until September 1, 2003, we are authorized to delay the completion of the phase-in until September 1, 2006. As also noted

below, other amendments may be phased in later.

A. Large Manufacturers

In the SNPRM, we proposed the following phase-in schedule, which would apply to all large manufacturers; *i.e.,* those producing more than 5,000 vehicles per year worldwide:

25 percent of each manufacturer's light vehicles manufactured during the production year beginning September 1, 2002;

40 percent of each manufacturer's light vehicles manufactured during the production year beginning September 1, 2003;

70 percent of each manufacturer's light vehicles manufactured during the production year beginning September 1, 2004;

All vehicles manufactured on or after September 1, 2005.

We noted that the proposed date for the start of the phase-in, September 1, 2002, would be 30 months after a final rule that was issued on March 1, 2000. We stated that this proposed date reflected the seriousness of the safety problem being addressed and the statutory requirement that the final rule become effective as rapidly as possible.

We also requested comments on phase-in schedules and percentages other than the proposed 25%–40%–70%–100% schedule. We cited the example of a 40%–70%–100% schedule beginning one year later than the proposed schedule, but ending at the same time. This alternative was like the primary proposal, except that the first year of the proposed phase-in would be eliminated. We noted that this alternative schedule would offer additional leadtime at the beginning of the phase-in, while not compromising the final effective date for all new vehicles. We also noted that with the availability of credits for early compliance, a manufacturer also would have additional time to develop and produce early-complying vehicles to meet the initial phase-in percentages.

We noted that while we had limited discretion in deciding when to make the final rule effective, we also have some discretion to make temporary adjustments in requirements if, in our judgment, such adjustments are necessary or prudent to promote the smooth and effective implementation of the goals of TEA 21 through the introduction of advanced air bags. We noted that the final rule could temporarily reduce the injury criteria or test speeds during the TEA 21 phase-in and then terminate those reductions at the end or after the end of that phase-in.

AAM, GM, DaimlerChrysler and Honda all supported a phase-in that would not begin until September 1, 2003 and that was not fully effective until September 1, 2006. The primary arguments offered for delaying the phase-in were the pending new test dummy regulations and the remaining uncertainty of the advanced air bag technologies. Honda also asserted that the barrier tests using the 5th percentile adult female test dummy should be delayed until after final dummy specifications and revised seating procedures are issued, perhaps until September 1, 2005.

CEI/CA argued that NHTSA's existing air bag experience should lead it to reject any mandate requiring technology and designs that are still under development. At a minimum, according to CEI/CA, the agency should establish requirements will not take effect until real-world data on such systems exists and has been analyzed. To the extent that it is statutorily constrained on this matter, it should set lead times at the absolute statutory maximum. These concerns are addressed in the section of this document dealing with unintended consequences.

Public Citizen, CU, and CAS stated that manufacturers should not be given undue latitude in meeting the advanced air bag requirements. These groups said that the manufacturers had repeatedly stated during the drafting of TEA 21 that they would need not more than 30 months in which to implement the new designs. The groups also noted that some manufacturers are already introducing some types of advanced air bag technologies. Public Citizen argued that the agency should give greater weight to the command in TEA 21 that the final rule shall take effect as rapidly as possible, the history of manufacturers' assertions of the ''impossibility'' of complying with new regulatory requirements, the test results of MY1999 vehicles, and the absence of data from manufacturers to substantiate their claim that the technology is not yet available.

The NTSB expressed disappointment that it would be MY 2006 before all new vehicles would be equipped with advanced air bag systems. It suggested that NHTSA encourage manufacturers to install advanced air bags prior to the established phase-in schedule, perhaps through an incentive program.

We have decided to implement a two-stage phase-in for advanced air bags. In the first phase-in, all portions of the final rule will be implemented, except the 56 km/h (35 mph) belted rigid barrier test. The first phase-in will be implemented as follows:

- 35 percent of each manufacturer's light vehicles manufactured during the production year beginning on September 1, 2003 with an allowance of advance credits for vehicles built after the effective date of the final rule;
- 65 percent of each manufacturer's light vehicles manufactured during the production year beginning on September 1, 2004 with an allowance of carryover credits from prior years;
- 100 percent of each manufacturer's light vehicles manufactured during the production year beginning on September 1, 2005 with an allowance of carryover credits from prior years; and,
- All light vehicles manufactured on or after September 1, 2006.

In the second phase-in, the belted rigid barrier test at 56 km/h (35 mph) using the 50th percentile adult male dummy will be implemented. It will be phased in as follows:

- 35 percent of each manufacturer's light vehicles manufactured during the production year beginning on September 1, 2007 with an allowance of advance credits for vehicles built after September 1, 2006;
- 65 percent of each manufacturer's light vehicles manufactured during the production year beginning on September 1, 2008 with an allowance of carryover credits from prior years in the second phase-in;
- 100 percent of each manufacturer's light vehicles manufactured during the production year beginning on September 1, 2009 with an allowance of carryover credits from prior years in the second phase-in; and,
- All light vehicles manufactured on or after September 1, 2010.

We have decided to delay the start of the first phase-in until September 1, 2003 because of the number of new measures that manufacturers will have to take in order to certify a vehicle as complying with the advanced air bag requirements (*i.e.,* meet new injury criteria, meet various test requirements with four new dummies, and meet the suppression and low risk deployment tests associated with air bag risk reduction). We note that the manufacturers' concerns over the pending dummy rulemakings and the seating procedure for the 5th percentile adult female dummy have been largely resolved by now. As an initial matter, all applicable dummies have now been incorporated into 49 CFR Part 572, although petitions for reconsideration are currently pending.[25] Additionally, the seating procedure for the 5th

[25] Likewise, the final rule incorporating the offset deformable barrier into 49 CFR Part 587 was issued in March, 2000.

percentile adult female is established in today's rule. We are confident that large vehicle manufacturers can meet the phase-in. As required by TEA 21, we are including provisions under which manufacturers to earn credits towards meeting the applicable phase-in percentages if they meet the new requirements ahead of schedule.

B. Limited Line, Small, Multi-Stage Manufacturers and Alterers

1. Limited Line Manufacturers

A phase-in generally permits vehicle manufacturers flexibility with respect to which vehicles they choose to initially redesign to comply with new requirements. However, if a manufacturer produces a very limited number of lines, *e.g.,* one or two, a phase-in would not provide such flexibility. Accordingly, we proposed to permit manufacturers that sell two or fewer carlines in the United States the option of omitting the first year of the phase-in if they achieved full compliance for the second year of the phase-in. We proposed to limit this alternative to manufacturers that produce two or fewer carlines in light of the statutory requirement concerning when the phase-in is to begin. We explained that absent such a limitation, it would technically be possible for the industry as a whole to delay introducing any advanced air bags for a year.

Porsche supported permitting manufacturers that produce two or fewer carlines the option of omitting the first year of the phase-in if they achieve full compliance during the second. In addition, Porsche recommended specifying that the alternative phase-in for limited line manufacturers is available to manufacturers who meet the ''two carline or fewer'' criteria at any time between publication of the final rule and the start of the phase-in. Porsche argued that such a specification would resolve any possible confusion over whether the provision applies to manufacturers who, during the phase-in, evolve from a two carline manufacturer into a three or more carline manufacturer.

We have decided to permit manufacturers that sell two or fewer carlines in the United States at the beginning of the first year of each phase-in (September 1, 2003 and September 1, 2006) the option of omitting the first year of each phase-in if they achieve full compliance by September 1, 2004, the beginning of the second year of the first phase-in and September 1, 2008, the beginning of the second year of the subsequent phase-in. This option is available only for limited line manufacturers since it would otherwise be possible for the industry as a whole to delay introducing any advanced air bags for a year.

We decline to adopt Porsche's suggestion that this option be available for manufacturers which meet the ''two carline or fewer'' criterion at any time between publication of the final rule and the start of the phase-in. As manufacturers produce more lines, the rationale for this option diminishes. Therefore, any manufacturer that evolves from a two carline manufacturer into a three or more carline manufacturer during each phase-in will not qualify for the applicable limited line alternative phase-in. We believe that manufacturers will know in advance if they plan to evolve from a two carline manufacturer into a three or more car line manufacturer well before the phase-in and can plan their compliance accordingly.

2. Small Manufacturers

To accommodate the needs of small volume manufacturers (SVMs), we proposed giving those manufacturers the option of waiting until the end of the phase-in to meet the new requirements. We explained that we were proposing to treat SVMs differently because of the complexity of the new requirements and the relatively short lead time before the phase-in begins. We explained that even the more streamlined set of requirements proposed in the SNPRM would require significant design changes and significant new testing. However, since the SVM provision would effectively allow SVMs to avoid the phase-in entirely, we also proposed to limit this option to manufacturers that produce fewer than 5,000 vehicles per year worldwide.

The Coalition of Small Volume Automobile Manufacturers (COSVAM) supported permitting SVMs to wait until the end of the phase-in to meet the new requirements. COSVAM stated that SVMs need until the end of the phase-in because they cannot obtain new technology at the same time it is made available to large manufacturers, because they have difficulty getting suppliers to sell to them at all, and because some SVMs source from large manufacturers and may source parts from a model which will not comply until the end of the phase-in. COSVAM also asked that the definition of small manufacturer for purposes of exclusion from the phase-in requirements be changed to include manufacturers that produce not more than 10,000 vehicles. COSVAM argued that the definition of small volume manufacturer should be based on the agency's overall statutory scheme and not on current production volumes.[26]

We recognize the technical challenges SVMs will face as a result of the requirements included in today's rule. In addition, while we recognize the importance of providing SVMs with sufficient lead time to comply with the new requirements, we note that we do not have unlimited discretion as to how much leadtime we can provide. TEA 21 provides that if the phase-in begins on September 1, 2003, the final rule must become fully effective by September 1, 2006. No exceptions are given for small volume manufacturers. We have decided, therefore, to exercise the discretion we do have and not require SVMs to comply before the end of each phase-in period (September 1, 2006 and September 1, 2010, respectively). However, we are continuing to limit this provision to manufacturers that produce fewer than 5,000 vehicles per year worldwide. We note that COSVAM did not provide any analysis demonstrating a need to increase the number beyond 5,000.

3. Multi-Stage Manufacturers and Alterers

Although we received comments in response to the original NPRM requesting that we provide an additional extension for multi-stage manufacturers and alterers beyond the end of the phase-in for large manufacturers, we did not propose such an extension in the SNPRM. We explained that we have limited discretion as to how much lead time we can provide, since TEA 21 provides no exceptions for multi-stage manufacturers or alterers. TEA 21 provides that if the phase-in begins on September 1, 2003, the final rule must become fully effective by September 1, 2006.

We stated in the SNPRM that final stage manufacturers are accustomed to completing vehicles within limitations identified by chassis manufacturers so that they can certify their vehicles with limited or no additional testing. Therefore, we stated that the industry should be able to address the issues raised by the advanced air bag rulemaking. We also urged chassis manufacturers to communicate with their multi-stage manufacturer customers as soon as possible concerning any new limitations that

[26] Under 49 U.S.C. 30113(d) and 49 U.S.C. 30113(b)(3)(B)(i), manufacturers whose total motor vehicle production in the most recent year of production is not more than 10,000 may, on the basis of economic hardship, apply for a temporary exemption from the requirements of any of the Federal motor vehicle safety standards.

may be imposed as a result of the advanced air bag requirements. We stated that the chassis manufacturers should be able to identify the type and likely scope of any such new limitations well before the end of the phase-in.

The Recreation Vehicle Industry Association (RVIA) (a trade association representing more than 95% of the van conversion industry) contended that its members need at least one year of lead time following full implementation of the new requirements for the large manufacturers. RVIA stated that this additional time is needed so that its members can obtain timely information from the chassis manufacturers, since guidance from incomplete vehicle manufacturers is generally not available until at or very near the startup of new or updated model production.

RVIA supported allowing small volume final stage manufacturers and alterers to certify compliance with a generic sled test pulse, arguing that if final stage manufacturers install seating systems within the guidelines established by the chassis manufacturers, further full scale barrier crash testing is no longer necessary and should not be the only method available for determining compliance. RVIA stated that the potential technical and financial burden of the proposed full scale barrier dynamic testing requirements jeopardized the continued viability of small volume multi-stage manufacturers.

The National Truck Equipment Association (NTEA) supported the proposal to allow manufacturers of multi-stage vehicles to defer compliance until the end of the phase-in period. NTEA explained that given the level of research and testing likely to be required by the final rule, manufacturers of multi-stage vehicles need as much time as possible to generate the compliance information needed to certify these vehicles.

We estimate that several hundred intermediate or final-stage vehicle manufacturers and alterers will be affected by today's rule. Multi-stage manufacturers modify incomplete vehicles (chassis), while alterers modify completed new vehicles that have been certified by their manufacturer as being in compliance with all applicable safety standards. With respect to Standard No. 208, most of the difficulties for multi-stage manufacturers and alterers involve changes to the vehicles' seats. If the advanced air bag system installed by the original vehicle or chassis manufacturer employs the seat as part of the system, by using such features as weight or position sensing components in the seat, any change to the vehicle's seat could affect the manufacturer's original certification. If the original manufacturer uses a weight or pressure system in the seat to turn the air bag off in appropriate circumstance, these manufacturers face a choice of using the original seat as is, relying on a supplier to provide the same sensing technology for their seats, or else certifying in some other way.

We recognize that the set of requirements contained in today's rule will require significant design changes and significant new testing for all cars and light trucks. We also recognize the importance of providing all manufacturers, including multi-stage manufacturers and alterers, with sufficient lead time to comply with the new requirements. We note, however, that we do not have unlimited discretion as to how much lead time we can provide. According to TEA 21, if the phase-in begins on September 1, 2003, the final rule must become fully effective by September 1, 2006. There are no exceptions for multi-stage manufacturers and alterers.

We appreciate the technical challenges multi-stage manufacturers and alterers will face as a result of the requirements included in today's rule. In an effort to address the needs of these small businesses, we have decided to allow multi-stage manufacturers and alterers to defer compliance until the end of each phase-in period (September 1, 2006 and September 1, 2010, respectively).

We believe that delaying the implementation schedule for multi-stage manufacturers and alterers strikes the appropriate balance between improving air bag safety, particularly for infants, children, and small-statured adults, while accommodating the needs of these manufacturers. We believe that this approach will increase the likelihood that multi-stage manufacturers and alterers will know what type of advanced air bag technology chassis and vehicle manufacturers are using well before they need to comply. This should provide them sufficient time to address any technical issues associated with advanced air bag technology and to generate whatever compliance information may be needed.

XI. Availability of Original Equipment and Retrofit Manual On-Off Switches

Standard No. 208 currently includes a temporary provision permitting manufacturers to provide as original equipment (OE) manual on-off switches for air bags in vehicles without rear seats or with rear seats too small to accommodate a RFCSS. This provision is scheduled to expire on September 1, 2000.

Also, on November 11, 1997, we published in the **Federal Register** (62 FR 62406) a final rule exempting, under certain conditions, motor vehicle dealers and repair businesses from the ''make inoperative'' prohibition in 49 U.S.C. 30122 by allowing them to install retrofit manual on-off switches for air bags in vehicles owned by people whose request for a switch is authorized by NHTSA. The final rule is set forth as 49 CFR Part 595, *Retrofit On-Off Switches for Air Bags.*

The purpose of the exemption was to preserve the benefits of air bags while reducing the risk of serious or fatal injury that current air bags pose to identifiable groups of people. In issuing that final rule, we explained that although vehicle manufacturers were beginning to replace current air bags with new air bags having some advanced attributes, *i.e.,* attributes that will automatically minimize or avoid the risks created by current air bags, an interim solution was needed for those groups of people at risk from current air bags in existing vehicles.

In the SNPRM, we proposed to allow both OE on-off switches and retrofit on-off switches to be installed under the same conditions that currently govern such installation in all vehicles produced prior to September 1, 2005, the date we proposed to require all vehicles to have an advanced air bag system. We proposed to prohibit both OE switches in, and retrofit switches for, vehicles manufactured after the end of the phase-in. We noted that while we believed that reliable and safe air bag systems could be developed in a timely manner, thus removing the need for an on-off switch, we were concerned that those individuals who are currently at risk from air bags might lack confidence in the new systems, particularly when they are first introduced. However, we believed this problem would diminish during the course of the phase-in, as consumers heard about, and became familiar with, advanced air bags.

Comments were submitted by AAM, DaimlerChrysler, Ford, Toyota, AORC, Autoliv, Advocates, NADA, and Parents for Safer Air Bags. Except for NADA, all commenters supported allowing manual on off-switches, both retrofit and OE, after the end of the phase-in. Some of the commenters supported an indefinite allowance, while others supported the agency revisiting the issue at the end of the phase-in. Additionally, Ford urged that we allow shunts, which would permanently deactivate an air bag, rather than retrofit on-off switches for vehicles with advanced air bag systems,

stating that the market incentive to continue to produce retrofit switches is too small. NADA supported eliminating retrofit on-off switches for vehicles with advanced air bags, but allowing OE switches as a method of suppression compliance in vehicles where OE switches are currently allowed.

We believe that by the end of the initial phase-in, manufacturers will have developed advanced air bag systems for most vehicles that are sufficiently reliable to obviate the need for manual air bag on-off switches. However, public acceptance of those advanced air bag systems may not be assured. Allowing on-off switches for some period after all vehicles are equipped with advanced air bag systems will provide parents with additional confidence until the reliability of all such systems has been verified based on real-world experience.

We continue to believe, however, that allowing manufacturers to install switches indefinitely would be counter-productive. The switches provide an opportunity for misuse. Adults could turn off their passenger air bag systems even though those systems pose virtually no risk to an adult occupant, particularly one who is belted. In such circumstances, the occupant would not receive the benefit of the air bag in a high-speed crash. The same possibility for misuse would exist for children in vehicles certified to the low risk deployment option.

Accordingly, we have decided to allow both OE and retrofit air bag on-off switches until September 1, 2012, two years after the end of the second phase-in. This additional time will allow manufacturers to perfect the suppression and low risk deployment systems in all their vehicles. Additionally, it will provide parents with additional time to satisfy themselves that the advanced systems work. Should we decide there is a continuing need for manual on-off switches beyond 2012, we can initiate rulemaking to extend the date at that time.

We note that there will be some need for deactivation of some sort (via on-off switch or permanently) for at-risk individuals who cannot be accommodated through sensors or other suppression technology (such as handicapped individuals or individuals with certain medical conditions). At this point in time, we believe such needs can be best accommodated through the permanent deactivation authorization system currently used by NHTSA. This system allows the use of shunts as suggested by Ford in its comments.[27]

XII. Warning Labels, Consumer Information, and Telltale Devices

A. Warning Labels and Consumer Information

On November 27, 1996, we published in the **Federal Register** (61 FR 60206) a final rule which, among other things, amended Standard No. 208 to require improved labeling on new vehicles to better ensure that drivers and other occupants were aware of the dangers posed by passenger air bags to children.

After reviewing the comments on the NPRM, we proposed in the SNPRM a replacement for the permanent sun visor label which contained statements taken from the 1996 labels regarding belt use and seating children in the rear seat. We also proposed substituting the word ''CAUTION'' for the word ''WARNING'' in the heading of the label. Finally, we proposed a new graphic which showed a cut-away side view of a vehicle with a belted driver and a child in a child seat in the rear. In addition, NHTSA proposed a new temporary label that states that the vehicle meets the new requirements for advanced air bags. These proposals were in response to commenters concerns that some types of warnings should be retained for advanced air bags.

Consistent with our proposal to require labels for vehicles with advanced air bags, we proposed to drop the current definition of ''smart passenger air bags'' contained in S4.5.5 and an existing option to remove warning labels in vehicles with air bags that meet that definition (S4.5.1).

In order to provide consumers with adequate information about their occupant restraint system, we proposed to require manufacturers to provide a written explanation of the vehicle's advanced passenger air bag system. We indicated that this explanation would probably be included in the vehicle owner's manual, although we requested comments on whether it would be desirable to have this information located elsewhere. Under our proposal, the explanation would need to include a discussion of the proper functioning of the advanced passenger air bag system and provide a summary of the actions that may affect the proper functioning of the system.

Fifteen commenters addressed the proposed changes to the air bag warning labels. Of these, five said little more than an expression of support for the proposal without much elaboration. On the other hand, four commenters representing consumer groups expressed strong concerns about any changes that ''weakened'' the warnings concerning air bags until the air bags meeting these new requirements are demonstrated to be effective in eliminating the risks associated with current air bags. One commenter also stated that research should be conducted before the air bag warning labels are changed. Additionally, very few commenters addressed our request for comments on the new graphic described above versus the previous graphic, which shows a rear-facing child seat being struck by an air bag.

After reviewing the comments, we have decided to change the proposed label to reduce the perceived ''weakening.'' First, we have decided to continue to use ''WARNING'' in the heading rather than ''CAUTION'' as we proposed in the SNPRM. Since no one objected to the proposed graphic, we are adopting the new graphic to help consumers distinguish between vehicles with various generations of air bags.

One commenter asked us to allow the new labels in any vehicle certified to the new requirements, rather than limiting their usage to vehicles manufactured after September 1, 2002. Because manufacturers will be allowed to certify vehicles to the new requirement prior to this date, we are removing this restriction.

One commenter also stated that the labels should be available in languages other than English. While we are not requiring this, as with the current labels, manufacturers may provide translations of the required English language message as long as all the requirements for the English label are met, including size.

A few commenters wanted additional information added to the label related to specific issues with advanced air bags. GM wanted the option of adding instructions to inform users how to properly behave depending on whether the air bag was active or inactive. NTSB wanted to require information on what actions to take if the telltale is not illuminated. CAS suggested that information should be added explaining how belt use affects air bag performance. Because these types of information are very design specific, we are not changing the warning label to address these comments. However, we are modifying the existing prohibition against other information on the sun

[27] Ford had also suggested that shunts be allowed in lieu of on-off switches. These shunts would permanently deactivate the air bag. We believe that allowing permanent deactivation for anyone other than individuals with special needs would not serve a safety need. Accordingly, we are rejecting this option.

visor to allow manufacturers the option of adding information, on a separate label, if they believe it is desirable to supplement the owner's manual information.

With respect to the proposal requiring manufacturers to provide additional information on the performance and design of advanced air bags in the owner's manual, the few commenters who addressed this issue supported the proposal. Therefore, we are requiring the owner's manual to include accurate information on each of the topics proposed in the SNPRM, specifically:

- A presentation and explanation of the main components of the advanced passenger air bag system.
- An explanation of how the components function together as part of the advanced passenger air bag system.
- The basic requirements for proper operation, including an explanation of the occupant actions that may affect the proper functioning of the system.
- A complete description of any passenger air bag suppression system installed in the vehicle, including a discussion of the suppression zone.
- A discussion of the telltale light on the instrument panel, explaining that the light is only illuminated when the advanced passenger air bag system is suppressed, is not illuminated when the advanced passenger air bag system is activated, and informing the vehicle owner of the method used to indicate that the air bag suppression system is not operating properly.
- An explanation of the interaction of the advanced passenger air bag system with other vehicle components, such as seat belts, seats or other components.
- A summary of the expected outcomes when child restraint systems, children and small teenagers or adults are both properly and improperly positioned in the vehicle, including cautionary advice against improper placement of child restraint systems.
- Information on how to contact the vehicle manufacturer concerning modifications for persons with disabilities that may affect the advanced air bag system.

B. Telltale Devices

In the SNPRM, we proposed that vehicles with static suppression systems would be required to have a telltale, located on the dashboard, that indicated when the passenger air bag was off. We also stated that the telltale need not illuminate when the passenger seat was empty, even if the air bag was suppressed under such a circumstance, but that each system needed to be equipped with a mechanism that indicated every circumstance when the air bag was suppressed.

Comments on the telltale were primarily from manufacturers and followed two basic themes. Some commenters argued that the requirement that the telltale be on the dashboard was overly stringent and inconsistent with the telltale location requirements for air bag on-off switches. Others commented that requiring a mechanism to determine all circumstances under which the air bag was suppressed did not make sense in the context of the telltale requirement. Ford also requested that we specifically allow more than one level of illumination to allow for changing light conditions.

We have expanded the possible locations for the telltale in the final rule. However, we have decided against simply adopting the existing on-off switch location provisions. In response to a petition for rulemaking from a manufacturer, we have allowed on-off switch telltales to be located anywhere within the vehicle interior as long as they are clearly visible to all front seat occupants. We decided to allow such a broad location for these telltales because on-off switches are only in a limited number of vehicles and because the air bags can only be suppressed when the driver or passenger consciously turns the air bag off. With static suppression systems, an individual will have no way of knowing whether the air bag is suppressed other than the telltale. Accordingly, we believe that the telltales should not be placed in a location that is arguably ''clearly visible,'' but may not be easily seen while driving or is susceptible to being covered up. We agree, however, that restricting the telltale to the dashboard may be overly restrictive. We have changed the regulatory text to state that the telltale must be located inside the vehicle in a zone above and forward of the H-point of the driver seat, when that seat is in its forward most position. Additionally, the telltale cannot be placed in or immediately adjacent to a storage compartment if use of the compartment could block the telltale from either the driver's or passenger's view. Thus, for example, the telltale could be located on the cover to the glove compartment, or by the rearview mirror, but could not be located behind a cup-holder.

The SNPRM did not require a single level of illumination for telltales. However, it also was not clear that multiple levels of illumination were allowed. We believe there may be a benefit to having multiple levels of illumination based on changes in the ambient light conditions. Accordingly, we have changed the regulatory text to specifically allow multiple levels of illumination as long as all levels are visible to individuals of all ages.

We are allowing the telltale to be turned off when the passenger seat is empty because we believe many manufacturers may choose to have the default setting for their suppression systems be a suppressed air bag. In such an instance, the air bag would usually be suppressed. We are concerned that the near constant illumination of the telltale could lead people to ignore the telltale. Alternatively, people could attempt to disconnect the telltale so that they did not have to look at it all the time.

In order to accommodate a design where the telltale was not illuminated when the seat was empty, but still allow for compliance testing of all of the proposed child seating positions, some of which could look to a suppression system like the seat was empty, we added a requirement that the vehicle come equipped with a mechanism that would indicate under all circumstances whether the passenger air bag was suppressed. The mechanism need not be contained within the interior of the vehicle, but could be a simple plug-in system where a piece of equipment is plugged into an outlet and provides the needed information. Alternatively, the mechanism could be the telltale that is required for all suppression situations other than an empty seat. In that instance, the telltale would need to illuminate in any of the test positions NHTSA used for compliance purposes.

XIII. Miscellaneous Issues

A. Child Restraints Used for Testing Suppression and Low-Risk Deployment Features

As discussed earlier in this notice, we proposed in the SNPRM to require manufacturers to assure compliance with tests to minimize the risks from air bags to infants and young children using any child restraint on a specified list of representative child restraints that was appropriate for a child the size of the applicable dummy. In developing the proposed list of representative child restraints, we attempted to select seats that are produced by various manufacturers while limiting the overall number of restraints. We proposed to add the list of child restraints as an appendix to Standard No. 208, and indicated that we planned to update the list from time to time (with appropriate lead time).

Comments can be broken down into four separate areas: NHTSA should develop a common ''footprint'' for

testing, the proposed list contains too many restraints, the proposed list does not contain enough restraints, and the list is either outdated or insufficiently detailed.

AAM, GM, Volkswagen, DaimlerChrysler and AORC all urged NHTSA to develop a standard ''footprint'' that could be used to certify compliance with our suppression tests. Takata did not believe a single footprint was necessary, but urged that the number of potential footprints on child restraint systems be severely limited. These same commenters, along with Isuzu, stated that the list of child seats was still too long and should either be reduced or manufacturers should be allowed to certify to no more than three seats in each category, at the manufacturer's option. The CAS argued that the list should be longer, and the American Academy of Pediatrics (AAP) urged us to add an oversized child seat designed for special needs children. Takata noted that the list did not include specific model numbers, and Evenflo noted that some of its seats on the list were no longer available or had been replaced by a different model.

We agree with manufacturers that a common footprint test device would considerably ease their ability to meet the static suppression performance requirements for infants and for three-year-olds and six-year-olds in child restraints. We also agree that our initial proposal to test with any seat produced over a ten-year period was overly expansive. However, the proposed number of seats in the SNPRM was dramatically reduced from the NPRM. These seats are real designs that are actually in use, not a test device which would never be used by a child. The only way we could guarantee that child restraints matched the footprint of this hypothetical test device would be to require the footprint to be incorporated into all child restraints. Even if we did not require that restraint manufacturers use the specific footprint, we would effectively limit their ability to produce any other type of restraint, since they could not assure parents that their seats would work with a vehicle's suppression system. Accordingly, we believe adopting a uniform test device with a specific footprint is inappropriate and overly design restrictive. Given the relatively small number of restraints on our list, we see no need to develop a specific test device.

Likewise, we do not believe that manufacturers should have the option of certifying to only a limited number of the restraints on the list. We do not believe that requiring compliance with 24 seats is excessive, given the importance of reliability in a suppression system and the fact that the suppression tests are nondestructive. Children sitting in the front seat will not receive the benefit of a suppression system that does not recognize their presence in the seat. If manufacturers believe their planned suppression technology is insufficient to detect a wide variety of child restraints, they will need to either improve or supplement that technology.[28]

We do believe, however, that the seats on the list are adequately representative of both child restraint designs and manufacturers.[29] Accordingly, we do not agree with the CAS that the list should be expanded. Nor do we believe it is necessary to add an oversized seat, as recommended by the AAP. These larger seats are not representative of seats that are typically found in vehicles and may be used by children who are considerably heavier than an average six-year-old. While these children should receive as much assurance of safety from a deploying air bag as all other children, we believe their needs can be accommodated by other means. Permanent air bag deactivation will continue to be available for individuals with unique medical or physical needs.

Based on Evenflo and Takata's concerns that the proposed list was insufficiently detailed and out-of-date, we have amended the list by replacing restraints that are no longer available and providing model numbers. We have also tightened up the language of Appendix A so that the designated restraints are limited by a production date closer in time to the effective date of the final rule. As stated in the SNPRM, the list will be updated periodically to subtract restraints that are no longer in production and to add new restraints, particularly those that are manufactured in accordance with recent amendments to Standard No. 213, Child Restraint Systems, (64 FR 10786, March 5, 1999), that require child restraints manufactured on or after September 1, 2002, to have components that attach to the lower anchors of a vehicle's child restraint anchorage system. (The March 1999 rule requires the anchorage systems to be installed on a phased-in basis in new vehicles beginning September 1, 2000.) At this time we do not contemplate increasing the overall size of the list. Some period of lead time will be provided so that manufacturers have adequate time to incorporate any needed design changes into their air bag systems.

B. Dummy Positioning for Static Suppression and Low-Risk Deployment Tests

AAM, GM, Toyota, Isuzu and DaimlerChrysler all argued in their comments that the static suppression tests were too burdensome, largely because of the range of seat back angles (from the nominal design position up to 25 degrees rearward of that position) and seat track positions (any position on the seat track or any height for adjustable seats). Breed Technologies stated that it did not believe the low risk test procedures adequately accounted for differences in vehicle geometry and that they were sufficiently ambiguous to lead to variations in procedure by different testing laboratories.

As discussed earlier in this document, in view of the fact that parents or caregivers who place children or child restraints in the front seat will not all use a single seat track position, we have determined that there is a need to test in different seat track positions. However, we have also concluded that there is no need to conduct suppression tests at every possible seat track position. Accordingly, we have decided that for vehicles certified to the suppression option, we will test only at the vehicle seat's full-rear position, mid-track position and full-forward position. In instances in which the infant restraint contacts the dashboard in the full-forward position, the vehicle seat will be moved back to the next detent that allows for clearance, or, in the case of automatic seats, until a maximum of 5mm (0.2 in) of clearance is achieved. Likewise, in tests involving suppression systems for 3-year-old and 6-year-old children, if the dummy or child would interfere with the dashboard, the vehicle seat will be moved back in a similar manner.

We have also determined that in many of the tests, testing with the seat back positioned 25 degrees rearward of

[28] We recognize that a manufacturer choosing the low risk deployment option for infants would be required to assure compliance with the applicable injury criteria with a 12-month-old dummy in each of the restraints listed in sections B and C of Appendix A, making the restraint unusable in subsequent tests. However, we believe the low risk deployment for properly restrained infants to be the most important low risk test in this rulemaking, as an infant's head would always be in close proximity to a deploying air bag.

[29] In no way does the inclusion of a particular restraint on the list represent an endorsement of that restraint by the agency. Restraints have been placed on the list because we believe they are representative of many products on the market, not because they offer a unique design that we believe is somehow superior to other designs. Likewise, the choice of restraint manufacturer is not based on any belief by the agency that a particular manufacturer produces restraints that are superior to those of other manufacturers. Restraints were chosen from a variety of manufacturers so as to adequately survey the design decisions of the entire population of restraint manufacturers.

the vehicle seat's nominal design position for the 50th percentile male was problematic. We believe that in many vehicles it may be impossible to properly install a child restraint with the seat back reclined this far back. We also do not believe that there would be any reason to recline a seat that is occupied by a child restraint. Since all of the infant tests involve the use of some type of restraint, we have decided to limit the seat back angle for these tests to the nominal design position for the 50th percentile male. Tests involving the 3-year-old and 6-year-old children or dummies in child restraints present the same concerns and will be addressed in the same way. Likewise, many of the test procedures involving children who are not in any type of restraint are unrealistic if tested with the seat 25 degrees back from the nominal design position. For example, a kneeling child with his chest resting against the seat back would find it difficult to hold his or her position.

The one position where we will recline the seat back is the test where the child is sitting on the seat and is leaning against the seat back (S22.2.2.2, S24.2.1). This test position will be conducted with the seat back at the manufacturer's nominal design position for the 50th percentile male and at 25 degrees rearward of that position so as to test for children who have reclined their seat backs to take a nap. If the vehicle seat does not recline that far, we will test with the seat reclined as far as possible. We agree with manufacturers that parents should not drive with their children in such a position. However, as long as manufacturers design the passenger seat to recline, we believe some parents will allow their children to lie on a reclined seat.

We have also decided to test whether the air bag system is active when the seat is occupied by a 5th percentile adult female at the seat back position achieved when positioning the fifth percentile adult female dummy in the passenger seat for dynamic tests. This should roughly approximate the nominal design position. Some commenters argued that the reclined position (*i.e.,* 25 degrees rearward of the nominal design position) distributes an adult's weight in such a manner that a suppression system that relied heavily on weight distributed to the seat cushion may be unable to determine whether the occupant is an adult or a child. Other commenters have argued that their suppression systems can adequately detect the total weight of a reclined 5th percentile adult female. We believe that the ability to detect the total weight of the dummy in a reclined position may vary depending on the type of suppression technology used. We also believe that a reclining adult has less need for a deploying air bag than an adult who is upright, and therefor closer to the air bag at the time of deployment.

We have changed the test that determines which stage or combination of stages of the air bag to deploy in the low risk deployment tests. As discussed earlier, the low risk deployment tests will only be conducted at speeds up to 26 km/h (16 mph). Accordingly, this test will be run at 26 km/h (16 mph). If there is no air bag deployment in the test, we will deploy the first stage of the vehicle's air bag when conducting our compliance tests.

Finally, we believe Breed's comments about the low risk deployment positions have merit. We have reduced the number of steps involved in placing the dummies because small adjustments to the procedure at each step, as well as the unique characteristics of the vehicle, could result in a final position that differed significantly from what we want, *i.e.,* the head on the instrument panel or the chest on the instrument panel. By reducing the number of steps needed to achieve that position, we have reduced the amount of potential variability. The one exception is the low risk deployment test for both child dummies where the head is placed on the instrument panel. We have retained a specific step-by-step procedure for this test, because the location of the air bag module on the instrument panel is so variable that we are currently unable to define a position on the instrument panel that we believe with any confidence represents the worst case scenario. We do, however, have considerable experience with a step-by-step procedure. While we agree that variations in vehicle design may make it difficult to follow the test procedure, we believe that we have modified the procedure in a way that will yield appropriate and consistent results.

C. Due Care Provision

Since March 1986, Standard No. 208 has included as part of its various crash test requirements a provision stating that:

> a vehicle shall not be deemed to be in noncompliance with this standard if its manufacturer establishes that it did not have reason to know in the exercise of due care that such vehicle is not in conformity with the requirement of this standard.

In adding this provision, we cited the complexity of the rigid barrier crash test of Standard No. 208. We stated that, because of this complexity, we believed that manufacturers needed assurance from the agency that, if they had made a good faith effort in designing their vehicles and had instituted adequate quality control measures, the vehicles would not be deemed to be in noncompliance because of an isolated failure to meet the injury criteria.

In the SNPRM, we noted that, among the Federal motor vehicle safety standards, the ''due care provision'' is unique to Standard No. 208. We noted further that, for a variety of reasons, we disfavor including a ''due care provision'' in any Federal motor vehicle safety standard. We explained that the inclusion of such a provision in a safety standard does not fit very well with the overall statutory scheme, because it introduces a measure of subjectivity into the issue of whether a vehicle complies with a standard. We also explained that, based on our experience with Standard No. 208 compliance activities, we do not believe there is an intrinsic need for a ''due care provision.'' However, recognizing that this rulemaking for advanced air bags would require manufacturers to certify their vehicles to a significantly greater number of complex test requirements in a limited amount of time, including a 48 km/h (30 mph) unbelted test with a new dummy, we stated that we did not believe that it would be appropriate to delete the provision at this time.

Accordingly, in the SNPRM, we proposed to retain the ''due care provision'' and extend it to the new crash test requirements. We stated that we were not proposing to extend the provision to test requirements that do not involve crashes because these tests are not affected by the variability associated with dynamically-induced dummy movement and/or vehicle deformation.

Commenters on the SNPRM presented sharply contrasting views concerning the due care provision. Vehicle manufacturers, air bag manufacturers and the Center for Regulatory Effectiveness urged that the due care provision be extended to the new static out-of-position tests as well as the new crash tests. They argued that there is as much variability associated with the static out-of-position tests as with crash tests, and argued that the due care provision will help resolve some practicability concerns.

Other commenters, however, argued that the due care provision is not in the public interest. Parents stated that if a vehicle's air bag system fails to meet Standard No. 208, the adverse effects on the public are the same whether or not due care was exercised by the manufacturer. That organization stated that the due care provision works

against the public interest by providing vehicle manufacturers with a means of avoiding the recall of vehicles that fail to comply with Standard No. 208. Parents and Advocates also argued that the due care provision in Standard No. 208 is inconsistent with its statutory counterpart, which only relieves vehicle manufacturers of civil penalty liability if the agency concludes that the manufacturer exercised due care.

Advocates stated that if the due care provision were retained and extended to other crash tests, the provision should be completely sunsetted at the end of the TEA–21 phase-in. Other commenters opposing the due care provision included Consumers Union, Public Citizen, and CAS.

After considering the comments, we continue to disfavor including a due care provision in the Federal motor vehicle safety standards and do not believe there is a need for the due care provision in Standard No. 208. Accordingly, while we will retain the existing due care provisions for the sled test and the 48 km/h (30 mph) unbelted barrier test (both of which will expire on September 1, 2006), we have decided against including a due care provision in for vehicles certified to the advanced air bag requirements.

As an initial matter, the static suppression tests are relatively simple pass-fail tests which do not involve deployment of an air bag or measurement of injury criteria on test dummies. Accordingly, we do not believe they raise the same compliance concerns as crash tests. The conditions under which either suppression or activation is required are specific and straightforward. Further, there are substantial differences between the conditions requiring suppression and those requiring activation. While there will undoubtedly be gray zones associated with suppression devices, those gray zones should be well outside the conditions for which either suppression or activation is required by the Standard.

Additionally, there is no reason to extend the existing due care requirements for vehicles certified to the advanced air bag high speed requirements. The 48 km/h (30 mph) belted rigid barrier test has been a part of Standard No. 208 for several years and has not proven problematic for manufacturers. The 56 km/h (35 mph) belted test will not begin to be phased-in as a requirement for eight years, which should provide ample leadtime. The unbelted tests will be less stringent than the 48 km/h (30 mph) unbelted rigid barrier test that was required prior to the 1997 final rule allowing the sled test option. Our testing has indicated that manufacturers can easily meet the new injury criteria with 50th percentile adult male dummies in a 40 km/h (25 mph) unbelted test with existing air bag systems and should be able to make what ever improvements are needed to do so with 5th percentile adult female dummies without major uncertainties before they are required to certify any vehicle as meeting the advanced air bag requirements of this rule.

We do not believe that not extending the due care provision will create any significant difficulties for manufacturers, given our practices and policies with respect to the enforcement of crash test requirements. Generally, we do not determine that a noncompliance exists merely because of an isolated test failure, if there is evidence that other tested similar units have met the Standard's performance requirements and there is no indication of the inadequate quality control procedures. Since the adoption of the provision in 1986, the agency has never found that a vehicle that failed to meet the performance requirements of the Standard should be deemed to be in compliance on the basis of the due care provision.

D. Selection of Compliance Options

In the SNPRM, we proposed to require that where manufacturer options are specified, the manufacturer would be required to select the option by the time it certifies the vehicle and would not thereafter be permitted to select a different option for the vehicle. This would mean that failure to comply with the selected option would constitute a noncompliance with the standard (as well as a violation of the certification requirement of 49 U.S.C. 30115), regardless of whether a vehicle complies with another option. We also proposed to specify that, upon request, manufacturers would be required to advise NHTSA of the compliance options selected for a given vehicle or vehicle model. On behalf of its members, AAM and AIAM argued in its joint comments that the proposed requirement does not meet the need for motor vehicle safety.

We have decided to adopt the provision proposed in the SNPRM, which is consistent with the approach we have taken in other recent rulemakings in which compliance options have been allowed. Our rationale for this approach was recently set out in some detail in our denial of a petition for reconsideration of an amendment that added a compliance option to Standard No. 201, ''Occupant Protection in Interior Impact.'' 64 FR 69665 (December 14, 1999). We adopt that rationale for purposes of this final rule, but we are adding a short discussion to address a few additional matters.

The final rule adopted by this notice provides numerous compliance options for manufacturers, far more than in any other standard we have previously adopted. For example, in order to reduce the risk of injury to various sizes of children, manufacturers may suppress the passenger air bag, either statically or dynamically, or assure that the air bag deploys in a benign manner. Likewise, manufacturers may use a benignly deploying air bag or a dynamic suppression system to reduce the risk of air bag injury to teenagers and small adult drivers. The existence of phase-ins provides manufacturers with additional options. While they must meet the applicable advanced air bag requirements for a specified percentage of vehicles during each phase-in, they have the option of certifying additional vehicles to those requirements in order to earn credits that can be applied to the percentages that need to be achieved in later years. Moreover, until September 1, 2006 (the end of the first phase-in), manufacturers may choose to certify compliance for at least a portion of their fleet with one of three different unbelted high-speed test requirements: The sled test of S13,[30] the long-standing 48 km/h (30 mph) unbelted rigid barrier test of S5.1.2(a), or the 40 km/h (25 mph) rigid barrier test of S5.1.2(b). Each of these three options has different injury criteria.

We have provided manufacturers with myriad options to allow and encourage them to develop and implement technologically innovative advanced air bag systems. However, this does not mean that we believe that each option provides exactly the same safety benefits. Rather, we believe that the standard as a whole, including its requirement of an irrevocable choice among compliance options, strikes the proper balance between assuring an appropriate level of safety and allowing an appropriate degree of manufacturer flexibility.

We have found that when some manufacturers are confronted with a compliance test failure indicating an apparent noncompliance with the option that they originally chose at the time they certified the vehicle, they have responded by asserting that their product complies with a different option. As explained in our earlier denial of reconsideration on this

[30] The text of S13 has been slightly revised to indicate which set of injury criteria must be met.

subject, such shifting in the asserted basis for compliance creates obvious difficulties for us, both in managing our resources available for compliance testing and in ultimately assessing a vehicle or equipment's compliance. We believe that a system that allows us to effectively allocate our scarce enforcement resources to ensure that our safety standards are being met clearly meets the overall need for motor vehicle safety.

In addition to preventing the unnecessary expenditure of resources, we also believe it is important for manufacturers to honor their certification commitments. The Safety Act does not allow for ''recertification'' after the certification label has been applied. Nor does it contemplate allowing manufacturers ''two bites at the apple.'' Moreover, there is ample evidence that consumers often choose to purchase a particular vehicle because its manufacturer has advertised that it has certain safety features. In light of consumer interest in and concerns about air bag safety, this consumer practice is likely to continue or even increase in the context of this rule. We believe that consumers should be entitled to expect that manufacturers will produce vehicles that comply with the requirements to which they are certified.

We note that a manufacturer that chooses to install multiple safety features that would independently comply with two or more of the specified compliance options in the standard is not prohibited from doing so. For example, a manufacturer may build a vehicle that meets both the static suppression and the low risk deployment requirements of today's rule. In such a case, it may be that a failure to comply with the option to which the vehicle was certified would be inconsequential to motor vehicle safety, such that a notification and remedy (*i.e.,* recall) campaign would not be necessary. However, in view of the fact that not all compliance options provide precisely the same level of safety benefits, such an inconsequentiality determination would not be automatic.

Although it is implicit from the foregoing discussion, we want to explicitly note that S4.8 applies to the decision by a manufacturer as to whether to certify a vehicle as complying with the advanced air bag requirements during each of the two phase-ins. If a manufacturer advises NHTSA (either in response to a request for compliance information or in a report submitted pursuant to 49 CFR Part 585) that it intends a particular vehicle or model to count as meeting the requirements of S14.1, S14.2, S14.3, or S14.4 during the applicable phase-in, a vehicle that failed to comply with the applicable performance requirements would be deemed to be in noncompliance with the standard, even if other vehicles produced by the manufacturer in the production year in question would have been sufficient to satisfy the specified percentage requirement for that year.

We believe that such a regulatory approach is particularly critical in the context of this rule, since consumers will know whether a vehicle is represented as complying with the advanced air bag requirements from a variety of sources (*e.g.,* the warning label in the vehicle, the owner's manual, manufacturer advertising, dealer sales staff, etc.) and may modify their behavior in reliance upon that representation (*e.g.,* by allowing the smallest child to sit in the front seat to suppress the air bag). If in fact the vehicle does not provide the promised performance (e.g., the suppression system does not function properly), the manufacturer would be required to notify NHTSA of the noncompliance and, unless the noncompliance were found to be inconsequential to motor vehicle safety, to remedy the problem.

E. Credits for Early Compliance

To encourage early compliance with the advanced air bag final rule, we were directed by TEA 21 to include means by which manufacturers may earn credits toward future compliance. Credits, on a one-vehicle for one-vehicle basis, may be earned for vehicles that are certified as being in full compliance with the final rule before the beginning of each of the applicable phase-in periods. They may also be earned during the phase-ins if a manufacturer's production of complying vehicles for a model year exceeds the percentage of vehicles required to comply in that year. We are amending 49 CFR Part 585 to specify reporting requirements that will allow us to administer this provision. Credits for the first phase-in may be earned immediately after this final rule becomes effective, but credits for the second phase-in may only be earned starting on September 1, 2006. We are only allowing credits to be earned for vehicles manufactured one year prior to the initiation of the second phase-in because we believe manufacturers should first direct their efforts towards full implementation of the first phase-in, particularly the risk reduction requirements. Consistent with the prior discussion of compliance options, a manufacturer's decision to certify a vehicle to the advanced air bag requirements before or during the phase-ins will be irrevocable, even if the manufacturer would have been able to satisfy the percentage requirements for a given model year with other vehicles in its fleet.

F. Choice Between Complying With Existing and/or New Injury Criteria and Test Requirements

In the SNPRM, we addressed, for vehicles not certified as being in full compliance with the final rule, the relationship of the proposed new injury criteria and performance limits to the existing test requirements of Standard No. 208. We stated that while some of the new and/or modified injury criteria and performance limits would apply to existing tests that are being retained in Standard No. 208, we were not proposing to change the injury criteria and performance limits for vehicles not certified to all of the requirements applicable to vehicles with advanced air bags.

We stated that, as a general matter, vehicles produced between the time the final rule becomes effective and the time the phase-in is complete would be required to comply with and be certified to all the current requirements and current injury criteria or to all the requirements for advanced air bags and new injury criteria; there would be no opportunity to mix and match.

However, as a possible exception to this, we requested comments on whether we should permit manufacturers to immediately certify their vehicles to whatever set of unbelted crash test requirements applicable to 50th percentile adult male dummies was adopted for the final rule, as an alternative to the currently available sled test or unbelted up-to-48 km/h (30 mph) rigid barrier test. In light of the limitations of the sled test, we stated that, to the extent vehicle manufacturers wished to immediately design and certify vehicles to whatever set of unbelted crash test requirements was included in the final rule, there could be safety benefits.

Several commenters, including AAM, DaimlerChrysler and Toyota, supported permitting manufacturers to begin immediately certifying to the new unbelted test in lieu of the sled test at the manufacturer's option, for vehicles without advanced air bags. In light of the comments and the discussion we presented in the SNPRM, we are including this option in the final rule. We have also decided to retain a manufacturer's option to certify to the existing 48 km/h (30 mph) unbelted barrier test to September 1, 2006. This

option will expire at the end of the phase-in because we believe that ultimately only a single set of injury criteria should apply to each test dummy.

G. Time Periods for Measuring Injury Criteria During Tests

In the SNPRM, we proposed specific points for the end of the period for measuring injury criteria in both crash tests and low-risk deployment tests. We noted that, for dynamic crash tests, we historically have not measured injury criteria more than 300 milliseconds after the vehicle impacts the barrier, and we proposed a 300 millisecond time duration for the dynamic crash tests. For the low risk deployment tests, which do not involve a complete vehicle crash and are intended only to address the potential adverse effects of an air bag, we proposed to measure injury criteria for up to 100 milliseconds after the air bag deploys.

We indicated that these time parameters would not apply to the dummy containment requirement. Regardless of the time frame used to measure other injury criteria, all dummies would continue to be required to remain fully contained within the test vehicle until both the vehicle and the dummies have ceased moving.

Comments were received from DaimlerChrysler, Toyota, Nissan, and Autoliv. Other than DaimlerChrysler, the commenters all supported truncating the test data at the point the dummy interacts with the vehicle interior and after the dummy's head had cleared the air bag. In the alternative, Nissan supported truncating the data in both the barrier tests and the low-risk deployment tests at 100ms. DaimlerChrysler, who commented only on the time-frame related to low-risk deployment tests, noted that it was possible for peak injury criteria to be reached after 100 ms because of low output initiator delay times. Accordingly, it suggested that the data for all deployments be truncated at 300 ms or when the dummy ceases to be in contact with the air bag, whichever occurs first.

Traditionally, we have not counted data that is recorded as the result of the dummy's head neck or torso striking the vehicle interior when the dummy is no longer engaged in the air bag. We continue to believe, as apparently do commenters, that the air bag is neither responsible for these injury values nor could the air bag have prevented these interactions with the vehicle compartment. However, we are concerned that truncating the data to the point at which the occupant is no longer engaged in the air bag is insufficiently objective for compliance purposes. While we intend to retain our existing policy on considering the location of the dummy relative to the vehicle interior and the air bag at the time peak injury measurements are recorded, we have decided to keep the time parameters for measuring data at specific level. Accordingly, data will be collected until 300 ms after the vehicle strikes the barrier in a dynamic crash.

Based on DaimlerChrysler's observation and our knowledge of low risk deployment technologies, we agree that a 100 ms time-frame for the low risk deployment test may be too small. Consequently, the parameters for truncating data for the low risk deployment tests have been changed to the same parameters used for the barrier tests, *i.e.,* 300 ms after the air bag deploys.

H. Cruise Controls

In the SNPRM, we proposed to require that cruise controls be deactivated when any stage of an air bag system is deployed, and included a brief procedure to test whether this requirement was met. We noted that if the cruise control were not deactivated, it would continue to provide power to the vehicle, which could lead to a runaway condition.

Only Consumers Union supported our proposal, stating a deactivated cruise control is a basic safety measure. AAM and DaimlerChrysler stated that we had not demonstrated a safety need for such a requirement and the proposed test procedure could make cruise control systems less reliable than they are currently. According to AAM, none of its members is aware of a single report of a cruise control remaining operational after an air bag deployment following a crash. DaimlerChrysler also noted that under most crash conditions, the cruise control is usually already deactivated by the time the air bag deploys, either because the vehicle's speed has fallen below a certain threshold or because the brakes have been applied. Additionally, cruise control systems generally requires a certain level of speed to operate, making compliance testing exceptionally difficult.

We agree with AAM and DaimlerChrysler that there is no need to regulate cruise control interaction with air bags at this time. We also are unaware of any instances where the cruise control remained on after an air bag deployed. It appears that manufacturers have already resolved this potential scenario. Finally, the addition of a test procedure could add additional complexity and potential unreliability to an already complex system. Accordingly, while we believe that the cruise control should deactivate when an air bag deploys, we do not believe this is an area currently in need of regulation.

I. Rescue Operations

In the SNPRM, we proposed to require that all air bags become deactivated after a maximum one-minute ''keep alive'' period has elapsed after the vehicle battery power is disconnected. We proposed a brief procedure to test whether this requirement was met. The purpose of this requirement was to ensure that rescue workers have a standardized method and time for deactivating air bags, to neutralize any potential danger they may face. We noted that the air bags in most vehicles are deactivated within a minute or less after battery power is disconnected.

Commenters generally supported the concept of having air bags automatically deactivate one to two minutes after a vehicle's battery power is shut off, although the NTSB argued that the deactivation time should be closer to ten seconds. AAM, Toyota, and DaimlerChrysler questioned the need for a requirement at all, since most manufacturers already deactivate the air bag within one to two minutes after the power is cut off. These commenters, along with AORC, Nissan, Delphi and TRW, all raised concerns over the proposed test procedure. Specifically, the commenters were concerned that the addition of an air bag firing voltage terminal to measure voltage changes within the air bag electrical system may actually cause unknown air bag deployment problems adversely affecting the system's overall safety effectiveness.

We continue to believe that a short air bag deactivation time would eliminate confusion and unnecessary delays in rescue work. We also believe that a period of one minute or less is appropriate. It is sufficiently short to assist in rescue operations but not so brief as to create design problems for manufacturers. We are concerned, however, that any test procedure that would allow us to objectively measure when the air bag has been deactivated could cause unnecessary complexity in the air bag system and potentially reduce system reliability. As noted in the preamble and cited by commenters, the air bags in most vehicles are deactivated within one minute or less after battery power is disconnected. Since most vehicles already meet the proposed timing, we are not convinced

that there is a sufficient need to regulate this issue at this time.

However, we urge manufacturers who do not design their air bag systems to shut off within one minute of power being cut off to work on reducing the time before such deactivation. Given the ability of most manufacturers to meet this time frame in existing vehicles, we do not believe this would pose a significant design challenge. Rescue personnel do not have the time or the resources to determine at a crash scene when an undeployed air bag will deactivate once power is cut off. A measure of uniformity in this area is desirable.

J. Hybrid III Dummy Neck

In the SNPRM, we requested comments on two issues related to the Hybrid III dummy neck.

First, we noted that there have been crash test situations where the agency has observed high neck moments being generated at the upper load cell of the Hybrid III dummy neck within 20 milliseconds of the initiation of large neck shear loads without observing substantial angular deformation of the dummy neck. We stated that while we believe that these are true loads being generated by the restraint system and not artifacts of an inappropriately designed neck transducer, we were uncertain whether this loading condition is biomechanically realistic. We requested commenters' views on this issue.

Second, we sought comments on the appropriate channel frequency class (CFC) for evaluating data from neck load cells for injury assessment purposes and whether that CFC should depend on the impact environment (*e.g.,* vehicle crash tests, out-of-position tests, etc.).

Several commenters noted that they did observe the high moment/low rotation loading condition and one, DaimlerChrysler, offered test data to suggest that the dummy's neck design does not follow established biomechanical response corridors. However, none of the commenters, including DaimlerChrysler, provided the agency with any additional data to justify or develop alternative dummy neck response requirements that either verify the responses of the current Hybrid III design or provide the basis for improving it.

Because of the need to minimize the likelihood of neck injuries and lack of testing alternatives, we will use the current Hybrid III neck designs in the final rule. However, we will immediately establish new and accelerate existing research and development efforts to further address this issue.

As to filtering, AAM and DaimlerChrysler stated that they believe that the filters specified by SAE J211 are appropriate for evaluating neck injury and that sources of the spikes/noise need to be identified and eliminated.

We agree with the commenters' suggestion that the SAE filter specifications for the individual neck loads are sufficient for evaluating neck injury potential. The sources of noise do not appear to be inherent in the dummy neck design, but rather are caused by incorrect assembly/maintenance of a specific dummy or by procedural variances which need to be corrected at the testing laboratories.

However, because Nij combines the neck bending moment and the neck axial force which have different channel frequency classes (CFC 600 for moment, CFC 1000 for axial force), we believe it is more appropriate to have a pure channel class frequency of 600 for Nij. Thus, we are specifying that a CFC 600 be used for computing the axial force component of Nij, and CFC 1000 for computing the peak axial neck forces. Because J211 does not require phaseless filters for frequency channel classes above 200, we have specified that all measurements be conducted with phaseless filters.

K. Seating Procedure for 5th Percentile Adult Female Dummy

Earlier in this notice, we discussed the issue of where the 5th percentile adult female dummy should be located during crash tests; *i.e.,* with the seat full forward or in some other position. A related issue is what seating procedure to use for positioning that dummy.

In the SNPRM, we proposed a seating procedure that was developed considering the work performed by the SAE Hybrid III 5th Seating Procedure Task Group and by NHTSA's Vehicle Research and Test Center (VRTC). The 50th percentile Hybrid III adult male dummy is the only dummy currently used for Standard No. 208 compliance crash testing. For that testing, the dummy is positioned according to S10 of the standard. As part of that procedure, the H-point of the dummy is located using the manikin and procedures in SAE Standard J826.

For the 5th percentile adult female dummy, we proposed a different seating procedure which does not use a manikin. In tests we conducted for positioning the 5th percentile adult female dummy, it made little difference whether a manikin was used or not. The proposed non-manikin procedure also made it easier to repeatedly position the 5th percentile adult female dummy.

We are adopting the seating procedure we proposed in the SNPRM. Although we have reviewed the proposed SAE seating procedure for the 5th percentile adult female in a dynamic crash test, we have decided against adopting this procedure because it has not yet been adopted by the SAE and may not be adopted, in any form, for some time. If the SAE does ultimately adopt a seating procedure that is different from the one we are adopting today, we will review that procedure and consider replacing our procedure.

L. Deletion of Tests Between the Initial and Supplemental Proposals

Several commenters raised concerns about the deletion of several tests in the SNPRM that were proposed in the NPRM.

Public Citizen, CAS and the American Academy of Pediatrics (AAP) expressed concern about deletion of rough road tests. AAP stated that the agency's rationale that this is an area that vehicle manufacturers will consider and address in the absence of Federal requirements could be used to justify elimination of all test requirements. AAP stated it does not think it is appropriate to eliminate safety tests related to obvious potential performance problems, particularly in cases where the consequences of performance failure could easily be the death of infants, children and adolescents.

Commenters also raised concerns about deletion of the proposed vehicle integrity requirements and the option for a full scale dynamic out-of-position test.

We note that we dropped each of these requirements in part because of problems with the proposed test procedures. A specific explanation for dropping each of the requirements is set forth in the SNPRM.

While rough road performance is certainly important, we do not believe there is any evidence that this is likely to be a real world problem. It would also be difficult to develop a test procedure that would assure that a dummy responded like a human to the forces imparted by a rough road. Indeed, the procedure we had proposed in the NPRM turned out to be impractical and did not accomplish its objective. Given our limited resources, we do not believe there is a need at this time to develop test procedures in this area.

As to the option for a full scale dynamic out-of-position test, we believe that other options included in today's final rule accommodate the various

advanced air bag technologies under development.

While vehicle integrity is important, this is an area that is not directly related to advanced air bags, and we believe it is best addressed outside of that context.

M. Consideration of Unintended Consequences

Some commenters raised concerns about the possibility of unintended consequences resulting from use of advanced air bag technologies.

In a joint comment, CEI/CA stated that they were concerned that we had not required extensive real world testing of the complex air bag systems that would be necessary to meet an advanced air bag standard. Those organizations argued that the absence of such data at the time of the original air bag mandate unexpectedly resulted in scores of air bag-induced deaths to children and other occupants.

CEI/CA also expressed concern that there have been large numbers of air bag-related recalls to remedy problems that testing alone failed to anticipate, such as weather-induced deterioration, and production and technological problems. They argued that the fact that these problems arose for the current generation of air bags indicates that the more complex systems envisioned by NHTSA will be even more prone to trouble.

CEI/CA argued that we should give consideration to the possibility of merely approving, rather than mandating, advanced air bags.

As noted above, CEI/CA argued also that NHTSA's existing air bag experience should lead it to reject any mandate requiring technology and designs that are still under development. At a minimum, according to CEI/CA, the agency should establish requirements will not take effect until real-world data on such systems exists and has been analyzed. To the extent that it is statutorily constrained on this matter, it should set lead times at the absolute statutory maximum.

Congressman David M. McIntosh similarly expressed concern that this rulemaking is being conducted too quickly, without real world data on how advanced air bags operate. He characterized the original mandating of air bags as rushing into uncharted territory and said that before repeating that mistake, we should perform extensive real world trials on advanced air bags.

As noted earlier in this final rule, the history of this agency's consideration of air bags is actually a very long one, having begun with a public meeting in 1969. Air bags were not mandated until 1991, when Congress enacted a law mandating that NHTSA amend its occupant protection standard to require the installation of air bags, thus eliminating the option of installing other types of automatic restraint systems such as automatic belts. Between those two events, there were more than 20 years of public proceedings, research projects and analyses conducted by NHTSA on the issue of air bags, research conducted by the vehicle manufacturers, the installation of air bags in 10s of 1,000s of vehicles, and the announcement by vehicle manufacturers of plans for installing them in many more.

To solve the problems that arose in the mid-1990s with many of the air bags installed in motor vehicles, the agency announced a comprehensive plan in November 1996. The plan set forth an array of immediate, interim and long term measures. The immediate and interim measures focused on behavioral changes and relatively modest technological changes. The long term measures focused on more significant technological changes, *i.e.,* advanced air bag technologies. The immediate steps included urging parents to place their children in the rear seat and giving motorists at risk the chance to turn off their air bags, requiring new labels with eye-catching graphics and colors and strong, clear warning messages, permitting the installation of original equipment on-off switches in new vehicles in which young children could not be placed in a child restraint system in a rear seating position, and permitting the installation of retrofit on-off switches to protect people in at-risk groups. Because of the lead time needed for advanced air bag technologies, NHTSA adopted an interim measure to accelerate manufacturer efforts to depower their air bags and make other short term design changes. The agency did this by permitting manufacturers to certify their vehicles using a sled test instead of a crash test more closely simulating a real world crash. In the long term, the agency said that it would conduct rulemaking to require the installation of advanced air bags.

Since 1996, the agency has been carefully laying the groundwork for completing the implementation of its comprehensive plan by issuing this final rule. As noted above, we have made extensive efforts to gather information and solicit public comments that would help us identify and select a sensible, effective array of requirements for increasing protection and minimizing risk. In February 1997, we held a public technical workshop on advanced air bag technologies. In December 1997, we sent an Information Request (IR) to the vehicle manufacturers to obtain detailed information concerning their changes in air bag design during the 1990s. In April 1998, Jet Propulsion Laboratories completed, at NHTSA's request, a report titled ''Advanced Air Bag Technology Assessment.'' In mid-1998, Congress made the judgment that advanced air bags should be required. It enacted TEA 21 mandating that we amend our occupant protection standard again, this time to require vehicle manufacturers to improve the protection provided by air bags and to reduce the risks associated with them by means that include advanced air bag technologies. Although TEA 21 required only that we seek public comment once on our proposals before taking final action, we asked for public comment twice. We issued a notice of proposed rulemaking (NPRM) in September 1998, and a supplemental notice of proposed rulemaking (SNPRM) in November 1999. To help us thoroughly explore the issues, we proposed or discussed a variety of alternatives and posed a wide-ranging array of questions.

Further, before we decided on what to include in this final rule, we carefully considered the available information and the public comments, the underlying safety problems, the performance of current motor vehicles, the ability (including lead time needs) of vehicle manufacturers to achieve better performance in future motor vehicles, the air bag technology (including advanced air bag technology) currently available or being developed, the cost of compliance, and other factors. We also carefully considered the comments concerning the costs, benefits and risks associated with each alternative proposal.

As required by the mandate to us in TEA 21, our final rule requires vehicle manufacturers to improve the protection provided by air bags and reduce the risks associated with air bags by means that include advanced air bag technologies. Thus, the final rule is very different from the one issued in 1984. That final rule mentioned advanced air bag technologies as a way of addressing concerns about air bags risks, but did not mandate their use to prevent unintended consequences. This final rule mandates their use.

This final rule does not, however, mandate the use of particular advanced air bag technologies. The requirements in the final rule are performance-based requirements that give vehicle manufacturers the flexibility they requested to choose which type of advanced air bag technology they include in the vehicles.

This final rule establishes requirements and procedures for testing the ability of advanced air bag systems to protect people in moderate to high speed crashes and to avoid creating risks in low speed crashes. There are new detailed test procedures for manufacturers to use in developing and testing their advanced passenger air bag systems to ensure that they either do not deploy at all in the presence of a young child or deploy in a low risk manner. Driver air bags are required to deploy in a low risk manner.

The final rule contains additional complementary measures for reducing the likelihood of unintended consequences for front seat occupants. It retains the existing, strongly worded and brightly colored warning labels urging motorists to place children in the back seat and urging everyone to buckle up. We recognize that some motorists will nevertheless place a child in the front seat. Our final rule requires that if vehicle is equipped with a passenger air bag system that turns the air bag off in the presence of a young child, the vehicle must also have a telltale to inform motorists whether the air bag has been turned off. Further, we have extended the availability of OE air bag switches in vehicles in which child restraints cannot be placed in a rear seat and of retrofit switches for at-risk people.

Finally, we have provided as much lead time as TEA 21 allows for vehicle manufacturers to comply with the advanced air bag requirements mandated by that law.

N. Reporting Requirements

Also as with previous phase-ins, we proposed amendments to 49 CFR Part 585 to establish reporting requirements to allow us to administer the phase-in and the use of advanced credits. We received no comments on this proposal and have adopted the changes to Part 585, with several modifications to clarify the requirements and to account for the addition of a second phase-in.

O. Use of Children and Adults for Testing Static Suppression Systems

In the SNPRM we proposed to permit manufacturers to use human beings to check suppression features in light of concerns that current dummies may not be sufficiently human-like to be recognized by some of the advanced technologies under development. If a manufacturer selected this option, the suppression requirements would need to be met at each of the relevant positions for any human being within a specified weight/height range for 3-year-old and 6-year-old children, and the air bag system could not be suppressed when the seat was occupied by a female within a height/weight range similar to that of a 5th percentile adult female.

In the SNPRM, we emphasized that these tests simply involve a child or adult assuming specified positions in the vehicle, with a technician checking (typically by looking at a light) whether the air bag system would be activated or deactivated; these tests do not involve deploying the air bag or moving the vehicle. To ensure absolute safety, we proposed to require manufacturers selecting this option to provide a method to assure that the air bag would not deploy during testing; such assurance could be made by removal of the air bag.

In general, commenters supported the use of humans under the conditions outlined in the SNPRM at least as a short-term measure. Manufacturers were generally concerned that the use of humans would present objectivity and reliability concerns. All of the manufacturers of vehicles and air bag systems who commented on this option addressed the industry efforts to develop a new test dummy that better replicates the human form than the current anthropomorphic test dummies. AORC, Consumers Union and AAP urged that the air bags be removed during tests with humans, arguing that removal is the only sure way to eliminate risk. GM and BMW were concerned that systems designed to recognize humans might not recognize the anthropomorphic test dummies in the vehicle crash tests.

GM and IEE stated that the ranges of weight and size provided in the SNPRM should be tightened, claiming the given range would create too much variability for a system to accurately detect presence with sufficient reliability. At the same time, the NTSB, AAP, and Trauma Link at the Philadelphia Children's Hospital have suggested that we further expand the height and weight ranges specified in the SNPRM.

We support the initiative industry has taken in developing a new, more human-like dummy. The prototype for a 5th percentile adult female dummy has already been developed by FTSS with support from various vehicle manufacturers. Based on presentations made to the agency, we believe a prototype for the 6-year-old child dummy will soon follow. Since we have not yet had an opportunity to study these new dummies, we are unable to comment on their suitability for suppression technologies. However, we can note that the dummies currently used in compliance tests were all designed for use in crash tests, and while their overall size and weight is representative of the humans they were designed to replicate, they do not demonstrate the same flexibility, muscle tone or weight distribution as humans. Once the new dummies have been fully developed, we will evaluate their suitability for testing suppression systems. It is our hope that we will soon be able to eliminate the use of humans as a compliance option for suppression systems.

As long as humans can be used to meet the suppression test criteria, it is imperative that the risk to these individuals be eliminated. This may require manufacturers to physically remove the air bag. However, manufacturers may be able to eliminate risk without removing the air bags. If they can do this, we see no need to require that the air bags be removed.

As for GM's and BMW's concerns that systems designed to recognize humans may not recognize dummies for crash tests, we note that we believe vehicles should be designed to protect people rather than test dummies. However, in order to meaningfully test for compliance to our standard, the air bag must fire in a crash test. Accordingly, manufacturers will need to design their systems in such a way that they can meet the crash test requirements with dummies located in the front seats.

In order to accommodate designs geared to recognition of people rather than inanimate objects, we have provided in S4.12 that manufacturers of vehicles with human recognition systems must provide NHTSA with information and equipment necessary to circumvent the suppression system for vehicle crash tests.

We have decided to keep the height and weight ranges proposed in the SNPRM. As noted above, the use of humans is intended as a temporary measure and will likely only be used until more human-like dummies can be developed. Accordingly, we believe it would be inappropriate to expand the height and weight ranges significantly beyond the height and weight of the applicable dummies. At the same time, we have decided against narrowing the height and weight ranges proposed in the SNPRM. Since suppression systems will ultimately have to work with people, a system that can only detect the presence of an individual within a tightly prescribed range would not perform adequately in the real world.

P. Small Business Concerns

As discussed later in the Regulatory Flexibility Analysis section, the requirements contained in this final rule may have a significant impact on a

number of small businesses, including small volume manufacturers, multi-stage manufacturers, alterers, seating system suppliers, air bag sensor and component manufacturers, and dummy manufacturers. Because today's rule will increase the demand for advanced air bag system technology as well as dummies and dummy parts (*e.g.,* accelerometers), we believe that today's rule will have a positive effect on the manufacturers of these products. We expect that today's rule will have a more significant impact on small volume manufacturers, multi-stage manufacturers, alterers, and seating system suppliers.

In the preliminary regulatory flexibility analysis accompanying the SNPRM, we estimated that the final rule would affect approximately 11 seating systems suppliers which are small businesses. We explained that these suppliers serve a niche market and estimated that they provide seats for less than two percent of the vehicles. We explained that depending on the technology chosen to meet the proposed advanced air bag rule, these suppliers would need to keep up with emerging technology.

Bornemann Products Incorporated, a seating component manufacturer, stated that 98 percent of its sales are to multi-stage vehicle manufacturers who primarily manufacture individual, custom vehicles. Bornemann stated that this rule could completely eliminate the ''niche'' market of individual custom vehicles. Bornemann stated that since original vehicle manufacturers will be reluctant to allow any changes to their chassis that could affect the air bag system, this rule would have a significant impact on seating system vendors and their suppliers (*e.g.,* fabric and trim suppliers, polyurethane producers, etc.), multi-stage vehicle manufacturers, vendors who supply these manufacturers with items such as carpet, steel and wood, and their employees.

Bornemann stated that NHTSA's estimate of 11 seating companies was incorrect, that the number is closer to 30 and that these 30 businesses have close to $80,000,000 in sales and employ around 2,500 people. Bornemann also estimated that the rule would have an impact on the following small businesses: direct seating system vendors (130 firms and around 5,000 employees); multi-stage manufacturers (around 250 with approximately 14,000 employees); and vendors who supply material for vehicles and seats (around 550 vendors and around 18,000 employees). Bornemann also stated that a temporary exemption from the rule would not lead to a permanent resolution of the problem due to the technical issues involved. Bornemann did not explain what those technical issues were nor did they explain to what extent they could not be addressed. Bornemann also did not discuss what specific differences between existing and future air bag requirements would create technical problems for them nor did they discuss what specific advanced air bag technologies would pose the greatest problems for them.

The Coalition of Small Volume Automobile Manufacturers (COSVAM), RVIA, and NTEA addressed the potential impact the new advanced air bag requirements would have on small volume manufacturers, multi-stage manufacturers, and alterers. A discussion of their specific comments as well as our response to them is included earlier in the section addressing the rule's phase-in requirements.

We appreciate the technical challenges small volume manufacturers, multi-stage manufacturers, alterers, and seating system suppliers will face as a result of the requirements included in today's rule. Therefore, we have considered whether there were any alternatives available that could simplify compliance for small businesses without adversely affecting safety.

RVIA asked that we allow small volume final stage manufacturers and alterers to certify compliance with a generic sled test pulse. As explained earlier in today's rule as well as in both the NPRM and SNPRM, we do not consider sled testing to be an adequate long-term means of assessing the extent of occupant protection that a vehicle and its air bag will provide occupants in the real world. Unlike a full scale vehicle crash test, a sled test does not, and cannot, measure the actual protection that an occupant will receive in a crash. The test can measure the limited performance attributes of the air bag, but not the performance provided by the full air bag system, much less the combination of the vehicle and its occupant crash protection system. It is that combination that determines the amount of protection actually received in a crash. We also note that it would be inconsistent with the Safety Act to allow multi-stage manufacturers and alterers to certify compliance with a generic sled test pulse. Under the Safety Act, we cannot base the applicability of our safety standards on the circumstances of the manufacturer, such as whether a vehicle is manufactured in one or more stages. Differences in the applicability of standards must be based instead on differences between vehicles, such as the differences between convertibles and sedans.

We note that sled testing is an accepted engineering practice and nothing precludes manufacturers from using sled tests as a basis for their certification. We note, however, that sled testing does not test all of the attributes (such as weight sensing or presence sensing) of the countermeasures that may be used to comply with the requirements of today's rule.

In light of the statutory mandates contained in TEA 21, the only alternative available to address the concerns of small businesses is to increase the lead time for small volume manufacturers, multi-stage manufacturers, and alterers. We note that COSVAM, RVIA, and NTEA all supported such an extension. Further, while we recognize and are sympathetic to the technical challenges small volume manufacturers, multi-stage manufacturers, and alterers will face as a result of the requirements included in today's rule, we emphasize that we have limited discretion as to how much lead time we can provide. TEA 21 provides that if the phase-in begins on September 1, 2003, the final rule must become fully effective by September 1, 2006. No exceptions are given for multi-stage manufacturers, alterers, or small volume manufacturers.

We acknowledge that there is no guarantee that this solution will ultimately solve all the technical problems of small businesses. We have no control over when manufacturers bring into compliance the vehicles they supply to multi-stage manufacturers during the phase-in period. In addition, we have no control over the particular advanced air bag technology vehicle manufacturers will use to comply with the new requirements (*e.g.,* whether the system will incorporate the seat).

Further, while we recognize that adapting to this technology may not be easy, it is necessary. Keeping pace with technology is not a new problem for these manufacturers. Manufacturers regularly incorporate new technology that improves the safety of their vehicles (*e.g.,* antilock brakes). However, to help minimize the economic impact of this final rule on small businesses, we urge air bag suppliers, chassis manufacturers, and OEMs to provide these manufacturers with as much engineering expertise as possible to help them meet the new requirements, and to keep the overall impacts small.

We note that we are undertaking efforts to address the needs of multi-stage manufacturers, alterers, and the businesses, such as Bornemann, that

supply them. We have established a Negotiated Rulemaking Committee to develop recommended amendments to the existing NHTSA regulations (49 CFR Parts 567 and 568) governing the certification of vehicles built in two or more stages to the Federal motor vehicle safety standards. The purpose of the amendments would be to assign certification responsibilities more equitably among the various participants in the multi-stage vehicle manufacturing process. The Committee will develop its recommendations through a negotiation process. It consists of persons who represent the interests that would be affected by any such amendments, such as first-stage, intermediate and final-stage manufacturers of motor vehicles, equipment manufacturers, vehicle converters, testing facilities, trade associations that represent various manufacturing groups, and consumers. The Committee is addressing several issues that should, when resolved, assist multi-stage manufacturers and alterers in complying with today's requirements. Such issues include, for example: the feasibility and cost effectiveness of alternate methods (*e.g.,* testing, computer modeling, or other as-yet-unspecified methods) to ensure compliance of completed vehicles with requirements of applicable FMVSSs; mechanisms for incorporating alternate methods of ensuring compliance into these regulations; mechanisms for sharing costs of testing; and requirements tailored to the capabilities and circumstances of each class of vehicles.

Q. Other Issues

1. Ability to Comment Effectively on the Supplemental Proposal

The Center for Auto Safety (CAS) has asserted in section I of its unpaginated, electronically-filed December 30, 1999 comments that the agency has engaged in an ''information blackout'' that has hampered the ability of CAS and others to understand and comment effectively on the SNPRM. In support of this assertion, CAS has cited both NHTSA's refusal to disclose materials submitted with claims of confidentiality by the motor vehicle manufacturers in response to the agency's December 17, 1997 requests for information concerning air bag technology in MY 1990–1998 light passenger vehicles (information requests) [31] and alleged inadequacies in the agency's October 26, 1999 report summarizing those materials. *Air Bag Technology in Light Passenger Vehicles* (R&D Report).[32]

NHTSA disagrees with CAS' general assertion that public commenters lack sufficient information to participate adequately in this rulemaking. The R&D Report is a lengthy document, consisting of a four-page Executive Summary, 37 pages of text and five appendices, that incorporates six tables and 31 figures. It describes and analyzes in some detail, but in general terms that do not disclose the identities of manufacturers or vehicle makes/models, the technology (Section 2.0) and trends (Section 3.0) in air bag technology during the 1990s. In addition, the R&D Report describes out-of-position testing conducted by NHTSA on MY 1996, 1998, and 1999 production vehicles (Section 4.1) and rigid barrier testing of 13 MY 1998 and 1999 vehicles with redesigned air bags (Section 4.2), and discusses evolving air bag fatality trends using data from NHTSA's Special Crash Investigations (SCI) program (Section 5.0). The agency's conclusion that the R&D Report provides commenters with ample information on which to base their comments is borne out by the specificity and sophistication of the comments submitted by CAS.

NHTSA also disagrees with CAS' more specific assertion that the absence of a discussion of air bag deployment thresholds in the R&D Report has inhibited comments on the SNPRM (CAS Comment, Section IA). Neither the SNPRM nor the NPRM on advanced air bags proposed to set a minimum deployment threshold limit. Furthermore, we did not receive information indicating that the vehicle manufacturers changed their deployment thresholds in response to the agency's March, 1997 sled test rule. Thus, commenters do not require specific information about deployment thresholds in order to present arguments in response to the SNPRM, and the deployment threshold issue is not directly relevant to this rulemaking action. Moreover, assuming that commenters wish to discuss deployment thresholds, data on this subject are readily available to commenters from other accessible sources. Data from NHTSA's National Accident Sampling System (NASS) that provides information about the ''delta Vs'' in actual crashes in which air bags have deployed is publicly available over NHTSA's Website and is widely used. In addition, information in publicly-available reports prepared by SCI provides delta-V information for crashes that have resulted in fatalities. These reports are publicly available and CAS has discussed these materials with specificity in Section IA and Attachment A of its comments.

CAS' charges in sections IB and IC of its comments with respect to alleged absence from the R&D Report of detailed air bag design information, such as information with respect to the location and mounting of air bags, folding pattern details, and information about inflation stages is similarly flawed. Because NHTSA's standards are performance standards rather than design standards, the agency has not proposed specific designs in either the NPRM or SNPRM. Thus, air bag design information at the level of detail desired by CAS is not necessary in order to comment intelligently on the SNPRM. Moreover, contrary to CAS' description, the R&D Report does contain considerable design information. See, e.g., section 3.1 (Trend Analysis) and Appendix A, which includes 45 pages of detailed charts and graphs.

CAS also has objected to the withholding of the manufacturers' crash test performance data (other than data concerning testing performed pursuant to the requirements of Standard No. 208). Again, this data has been subject to litigation between CAS and the agency. But, in the R&D Report, at section 4 and Appendix D, NHTSA has provided the public with data from agency testing on a variety of vehicles using 5th percentile adult female dummies. CAS is obviously aware of these data; it has cited and discussed them in its comments.

2. Resubmittal of Petition for Rulemaking by Donald Friedman and Carl Nash

In a joint comment, Carl Nash and Donald Friedman stated that they believe that attempting to regulate all aspects of air bags may be counterproductive. They also argued that setting a minimum threshold of approximately 29 km/h (18 mph) and prohibiting late deployments would most protect vehicle occupants. We did not propose to set a minimum threshold as part of this rulemaking. Accordingly, adding such a requirement to the final rule would be outside of the scope of

[31] The withheld information is currently the subject of litigation between CAS (represented by Public Citizen Litigation Group) and NHTSA. All of the vehicle manufacturers that received and responded to the information requests , as well as several air bag suppliers, have intervened as defendants. *CAS* v. *NHTSA, D.D.C.,* No. 99–1759 (GK). The district court issued a decision denying the CAS' motion for summary judgement and granting NHTSA's and the intervenors' cross-motion for summary judgement on February 28, 2000.

[32] On December 16, 1999, the agency published a revised version of the R&D Report (Revision 1) that contains minor technical corrections to the October 26, 1999 Report. Revision 1 has been docketed at NHTSA-1997–2814–62.

the rulemaking. However, we are requiring that manufacturers meet a low risk deployment test for drivers and for small children if the air bag does not suppress. We believe that these requirements will adequately protect most individuals who could be seriously injured or killed with current air bags. Likewise, we are requiring manufacturers to meet the applicable injury criteria in a 40 km/h (25 mph) offset deformable barrier crash test. As explained earlier in this document, that test is designed to prevent the late deployments to which Friedman and Nash object.

In the SNPRM, we denied a petition by Mr. Friedman and Mr. Nash that would have required manufacturers to develop systems that would further encourage vehicle occupants to use their safety belts. In denying the petition, the agency stated that it does not have the legal authority to require such technology, although we are not discouraging manufacturers from voluntarily using such technology. The basis for our rationale is an amendment made to the Motor Vehicle Safety Act in 1974 after NHTSA had amended its occupant protection standard to require vehicle manufacturers of vehicles equipped with manual seat belts, instead of automatic protection, to install inducements for belt use. These inducements were either interlocks that prevented one from driving the vehicle unless the safety belt was used or buzzers that sounded continuously until the safety belts were attached.

Friedman and Nash have resubmitted their petition in response to the SNPRM. As noted in the SNPRM, we do not believe we currently have the statutory authority to require such devices. Nor do we believe that requiring any device that is not a buzzer or an interlock is within our authority, given the 1974 amendment. Accordingly, we are denying their resubmission. Nevertheless, we agree with Mr. Friedman and Mr. Nash that in the twenty-five years since that amendment was enacted, patterns of safety belt usage have changed considerably. We are planning to monitor the level of public acceptance and effectiveness of systems that manufacturers are placing in their vehicles to encourage seat belt use. If it appears that these systems are working, it may be appropriate to seek to have the 1974 amendment either changed or repealed.

XIV. Benefits and Costs

The Final Economic Assessment (FEA) provides analyses of the safety benefits from tests that reduce the risk of injury from air bags in low-speed crashes, as well as from tests that improve the overall effectiveness of air bags in high speed crashes. The intent of this rulemaking is to minimize risks caused by air bags to out-of-position occupants, especially infants and children, and to improve occupant protection provided by air bags for belted and unbelted occupants of all sizes. To achieve these goals, we are requiring vehicles to meet test procedures that broaden the scope of the current standard to ensure that occupants are properly protected under a wider variety of crash circumstances.

The risk of injury from air bags arises when occupants are too close to the air bag when it inflates. Generally, those most at risk from injury are infants, young children, and out-of-position drivers. We estimate that in a fleet fully equipped with pre-model year (MY) 1998 air bags, there would be 46 drivers, 18 infants, 105 children, and 18 adult passengers at risk of being killed by air bags annually because they were out of position when the air bag deployed in low speed (<25mph delta-v) crashes. We also estimate that if all vehicles had air bags, 38 drivers, 9 infants, 200 children, and 15 adult passengers would sustain serious to critical (MAIS 3–5) nonfatal injury because they were out of position in low severity crashes. A variety of technologies could be used to prevent these deaths and serious injuries, including weight or presence sensors to suppress the air bag, multi-stage inflators, and low risk deployment air bags.

To address these concerns, the new suppression and low risk deployment tests employ crash dummies representing infants, 3-year-old children, 6-year-old children, and 5th percentile female drivers. These tests generally require either that the air bag be suppressed if certain risk conditions exist or that deployments occur at levels that produce a low probability of injury risk.

Of the 187 potential at-risk fatalities, NHTSA estimates that suppression technologies could prevent up to 93 fatalities, low-risk air bags could prevent up to 154 fatalities, and multi-stage inflation systems could prevent up to 179 fatalities when combined with weight sensors used to suppress the air bag. Thus, more than 95 percent of the at-risk population in low speed deployments could be protected by technologies used to meet the test requirements. Of the 262 serious but nonfatal injuries, suppression technologies could prevent 151 injuries, low-risk air bags could prevent 191 injuries, and multi-stage inflation systems could prevent up to 252 injuries when combined with a weight sensor.

There is some question about the reliability of suppression and low risk deployment countermeasures and further development of these countermeasures is necessary. To the extent that these systems are not as reliable as assumed, children and small adults would continue to be at risk. Even if suppression and low risk deployment technologies are completely reliable, there will remain some out-of-position individuals subject to the full force of the air bag under certain circumstances. The risks to out-of-position individuals could be greater with an air bag designed to provide a 48 km/h (30 mph) unbelted performance compared to an air bag designed to provide 40 km/h (25 mph) unbelted performance.

The FEA also analyzes three alternative sets of high speed tests instituted to preserve and enhance air bag protection. Each test includes belted and unbelted frontal rigid barrier tests using 5th percentile adult female and 50th percentile adult male crash dummies, 30 degree oblique tests into a rigid barrier using unbelted 50th percentile adult male dummies, and 40 percent offset frontal deformable barrier tests using 5th percentile adult female dummies. Alternative 1 would require an unbelted 32 to 40 km/h (20 to 25 mph) frontal rigid barrier test, while Alternative 2 would require an unbelted 32 to 48 km/h (20 to 30 mph) frontal rigid barrier test. Both alternatives would require a belted 0 to 48 km/h (0 to 30 mph) frontal rigid barrier test. Alternative 3 would require an unbelted 32 to 40 km/h (20 to 25 mph) frontal rigid barrier test, but would require a belted 0 to 56 km/h (0 to 35 mph) frontal rigid barrier test for the 50th percentile adult male dummies and a belted 0 to 48 km/h (0 to 30 mph) frontal rigid barrier test for the 5th percentile adult female dummies. Chapter I of the FEA provides the detail of the alternative sets of high speed tests.

A variety of technologies could be used to comply with these tests including modified air bag fold patterns, improved inflators, added sensors, multi-stage inflators, and pretensioners. Air bag systems designed to comply with the 40 km/h (25 mph) offset test would, over the lifetime of one model year's production, save 20–28 more lives and prevent 134–262 more nonfatal injuries than the pre-MY 1998 baseline vehicles. Systems designed to the 48 km/h (30 mph) tests with the 5th percentile female dummy would save 23 more lives (4 belted and 19 unbelted)

and prevent 184 more nonfatal injuries (43 belted and 141 unbelted). Systems that meet the 56 km/h (35 mph) rigid barrier test with the belted 50th percentile male dummies would save from 0–4 more lives and prevent 256 to 486 more nonfatal injuries.

Estimates of the relative impact of the unbelted high speed tests are subject to a degree of uncertainty for several reasons, not the least of which is the fact that no vehicles were ever subject to a 40 km/h (25 mph) unbelted standard. We cannot estimate the most likely difference between setting the unbelted tests at the two different levels, because it depends on how the manufacturers would meet the alternative performance requirements.

We have discussed in detail our reasons for believing that it is unlikely that vehicle manufacturers will significantly depower their air bags compared to the MY 1998–2000 fleet. Vehicle manufacturers have not depowered their air bags so much that they minimally comply with the sled test. Crash tests and field experience to date with vehicles certified to the sled test have indicated that there has not been a loss of frontal crash protection compared to pre-MY 1998 vehicles. If, as we expect, the manufacturers keep the same level of power as they currently have in MY 1998–2000, even with a 40 km/h (25 mph) unbelted test requirement, then the difference in actual benefits between the two test speeds would be small or even eliminated.

At the same time, we cannot rule out the possibility that air bags will be significantly depowered. To account for this possibility, we calculated a ''worst case'' scenario comparing the benefits at the minimum performance requirements of each speed. We derived point estimates using two different methods and different sets of assumptions. We estimate that vehicles designed with 48 km/h (30 mph) air bags could provide 229 or 394 more lives saved than vehicles designed with minimally compliant 40 km/h (25 mph) air bags. However, we also estimate that 48 km/h (30 mph) air bags could result in an additional 1,345 serious injuries [33] compared to vehicles designed with 40 km/h (25 mph) air bags. These point estimates do not necessarily define the full range of possible outcomes due to uncertainty regarding both data and assumptions under each method.

Even assuming a worst case scenario, each of the three alternatives provide more potential benefits than the existing 48 km/h (30 mph) generic sled test. We estimate that the generic sled test is roughly equivalent to a 35 km/h (22 mph) rigid barrier perpendicular crash. During the 1997 rulemaking, we looked at the relative safety consequences of an air bag designed to just meet the performance requirements associated with a 48 km/h (30 mph) generic sled test. We estimated the fatality impacts of designing a vehicle to minimally meet the performance requirements imposed by the 48 km/h (30 mph) generic sled test and have compared these to the fatality impacts of designing a vehicle to just meet the 40 km/h (25 mph) unbelted rigid barrier test. Assuming there is no impact on air bag size, air bags designed to the 40 km/h (25 mph) unbelted rigid barrier test would save 64 to 144 more lives than air bags designed to the generic sled test. Assuming air bags designed to the generic sled test would be reduced in size and therefore provide no benefit in partial frontal impacts, 282 to 308 more lives could be saved by air bags designed to the 40 km/h (25 mph) unbelted rigid barrier test because that test requirement includes testing vehicles at a 30 degree oblique angle, thus providing benefits in partial frontal impacts.

Potential compliance costs for the final rule vary considerably and are dependent upon the method chosen by manufacturers to comply. Methods such as modified fold patterns and inflator adjustments can be accomplished for little or no cost. More sophisticated solutions such as proximity sensors can increase costs significantly. Dynamic presence sensors are not available at this point in time. They have not been refined to the point that they are in use in vehicles and are not required by tests in any Alternative. However, they have the potential to provide more benefits on the passenger side than weight sensors or low risk air bags. Dynamic presence sensors could be used by manufacturers to meet the test requirements in the future. As such, the cost and benefits of these systems have been estimated. The range of potential costs for the compliance scenarios examined in this analysis is $21–$128 per vehicle (1997 dollars). This amounts to a total potential annual cost of up to $2 billion, based on 15.5 million vehicle sales per year.

Compliance methods that involve the use of suppression technology have the potential to produce significant property damage cost savings because they prevent air bags from deploying unnecessarily. This saves repair costs to replace the passenger side air bag, and frequently to replace windshields damaged by the air bag deployment. Property damage savings from these requirements could total up to $85 over the lifetime of an average vehicle. This amounts to a potential cost savings of $1.3 billion.

XV. Rulemaking Analyses and Notices

A. Executive Order 12866 and DOT Regulatory Policies and Procedures

_____NHTSA has considered the impact of this rulemaking action under Executive Order 12866 and the Department of Transportation's regulatory policies and procedures. This rulemaking document is economically significant and was reviewed by the Office of Management and Budget under E.O. 12866, ''Regulatory Planning and Review.'' The rulemaking action has also been determined to be significant under the Department's regulatory policies and procedures. NHTSA is placing in the public docket a Final Economic Assessment (FEA) describing the costs and benefits of this rulemaking action. The costs and benefits are summarized earlier in this document.

B. Regulatory Flexibility Act

We have considered the effects of this rulemaking action under the Regulatory Flexibility Act (5 U.S.C. 601 *et seq.*) We have prepared a Regulatory Flexibility Analysis (RFA), which is part of the FEA. The RFA concludes that the final rule could have a significant, short-term economic impact on a substantial number of small businesses, but the economic impact on a substantial number of small businesses need not be significant in the long run. Small organizations and small governmental units will not be significantly affected since the potential cost impacts associated with this rule should only slightly affect the price of new motor vehicles.

The rule will directly affect motor vehicle manufacturers, second-stage or final-stage manufacturers, and alterers; and indirectly affect air bag manufacturers, seating system manufacturers, and dummy manufacturers.

There are approximately five main suppliers of air bag systems. The agency does not believe that any are small businesses. In addition, we believe that there may be some second and third tier

[33] The less aggressive single-stage air bag that can be designed to a 40 km/h (25 mph) unbelted test can result in fewer air bag caused injuries at low speeds than an air bag designed to a 48 km/h (30 mph) unbelted test. Thus, single-stage air bags designed to a 48 km/h (30 mph) unbelted test can prevent more fatalities, while single-stage air bags designed to a 40 km/h (25 mph) unbelted test can prevent more injuries. Multi-stage air bags are assumed to provide the same level of benefits during the first stage, whether the second stage is designed for a 40 km/h (25 mph) unbelted test or a 48 km/h (30 mph) unbelted test.

manufacturers of components of air bags or air bag sensors that are small businesses. We do not believe, however, that there is a substantial number of them. Since today's rule will increase the demand for air bag systems and advanced air bag system technology, we believe that today's rule will have a positive effect on air bag manufacturers and on second and third tier manufacturers of air bag components.

There are several manufacturers of dummies and/or dummy parts. All of them are considered small businesses. While the rule will not impose any requirements on these manufacturers, we expect it will have a positive impact on these types of small businesses by increasing demand for dummies and/or dummy parts (*e.g.,* accelerometers).

For passenger car and light truck manufacturers, we estimate that there are only about four small manufacturers (SVMs) in the United States. We believe that these manufacturers, which serve a niche market, do not manufacture even 0.1 percent of total U.S. passenger car and light truck production per year. We note that these manufacturers are already required to certify compliance to Standard No. 208's air bag requirements under ISTEA. In the past, many of these manufacturers have petitioned for temporary relief from the air bag requirements on the basis of economic hardship. We anticipate that these manufacturers will encounter difficulty certifying compliance with the requirements being added to Standard No. 208 by today's rule.

In an effort to address the needs of these SVMs, we have decided to allow them to wait until the end of the phase-in to meet the requirements of today's rule. This will give SVMs more time to perform the engineering analysis and generate the compliance data needed to comply with today's rule. Since the requirements in today's rule will enhance the safety of vehicles and air bags for infants, children, small-statured adults and both belted and unbelted occupants, we believe any delays in compliance should be granted in the narrowest of circumstances only. We are, therefore, limiting this option to manufacturers which produce fewer than 5,000 vehicles per year worldwide.

RVIA asked that final-stage manufacturers be given a one-year extension after the end of the phase-in for large manufacturers. RVIA stated that guidance from incomplete vehicle manufacturers is generally not available until at or very near the startup of new or updated model production and that, therefore, final stage manufacturers will need at least one additional year to meet the new requirements.

NTEA supported the proposal to allow multi-stage produced vehicles to be phased in at the end of the phase-in period. NTEA requested that the phase-in period run from September 1, 2003 to September 1, 2006.

In the initial regulatory flexibility analysis, we stated that we knew of 11 businesses that supply seating systems to van converters and others and that are small businesses. In addition, there are about 10 suppliers of seating systems that are not small businesses. The small businesses serve a niche market and provide seats for less than two percent of vehicles. Depending on the technology manufacturers choose to meet the advanced air bag final rule, these suppliers will have to keep up with the technology.

Bornemann Products Incorporated is a small business that provides seating components to second- and final-stage manufacturers and alterers. Bornemann argued that the cost per vehicle and the impact on small businesses could be significant. Bornemann stated that this rule could have a significant impact on the industry that supplies the ''niche'' market of individual custom vehicles. Bornemann's concerns have been addressed extensively earlier in this document. We refer the reader to that discussion. Additional information concerning the projected impacts of today's rule on small entities is presented in the FEA.

We believe that second- and final-stage manufacturers and alterers will choose to certify compliance in one of two ways. They will either (1) rely on suppliers to provide them with the same technology (weight sensing, seat track sensing, etc.) provided to the OEM manufacturers or (2) purchase the full seat from the OEM and, leaving the technology in place, re-upholster the seat. If they rely on manufacturers to supply them with the same technology, there will be a cost associated with installing the technology in the seat and assuring compliance (*e.g.,* static testing) if they cannot pass through the supplier's certification. There will also be costs associated with certifying compliance with the rigid barrier test.

C. National Environmental Policy Act

NHTSA has analyzed this proposed amendment for the purposes of the National Environmental Policy Act and determined that it will not have any significant impact on the quality of the human environment.

D. Executive Order 13132 (Federalism)

The agency has analyzed this rulemaking in accordance with the principles and criteria contained in Executive Order 13132 and has determined that it does not have sufficient federalism implications to warrant consultation with State and local officials or the preparation of a federalism summary impact statement. The final rule has no substantial effects on the States, or on the current Federal-State relationship, or on the current distribution of power and responsibilities among the various local officials.

E. Unfunded Mandate Reform Act

The Unfunded Mandates Reform Act of 1995 requires agencies to prepare a written assessment of the costs, benefits and other effects of proposed or final rules that include a Federal mandate likely to result in the expenditure by State, local or tribal governments, in the aggregate, or by the private sector, of more than $100 million annually (adjusted for inflation with base year of 1995). This rule will not have a significant expenditure of funds by State, local and tribal governments. However, the cost of the Rule will exceed the expenditure of over $100 million by the private sector. Rather than requiring a specific technology, this rule allows manufacturers to certify compliance with the advanced air bag requirements through a combination of several different technologies. Some of theses technologies, such as a dynamic suppression system, may be quite expensive. Other technologies, such as a weight sensor, are relatively cheap. The decision as to which technology to place in a particular vehicle rests with the manufacturer of that vehicle. A full assessment of the Rule's costs and benefits is provided in the FRA.

F. Executive Order 12778 (Civil Justice Reform)

This final rule does not have any retroactive effect. Under section 49 U.S.C. 30103, whenever a Federal motor vehicle safety standard is in effect, a state may not adopt or maintain a safety standard applicable to the same aspect of performance which is not identical to the Federal standard, except to the extent that the state requirement imposes a higher level of performance and applies only to vehicles procured for the State's use. 49 U.S.C. 30161 sets forth a procedure for judicial review of final rules establishing, amending or revoking Federal motor vehicle safety standards. That section does not require submission of a petition for reconsideration or other administrative proceedings before parties may file suit in court.

G. Paperwork Reduction Act

In its November 5, 1999 supplemental notice of proposed rulemaking, NHTSA sought public comment on its estimates of the additional collection of information burden imposed on the public as a result of this rulemaking. NHTSA received no comments on the collection of information issues.

This final rule includes the following ''collections of information,'' as that term is defined in 5 CFR Part 1320 *Controlling Paperwork Burdens on the Public:*

Air Bag Phase-In Reporting Requirements—For the six production years ending on August 31, 2003, August 31, 2004, August 31, 2005, August 31, 2007, August 31, 2008, and August 31, 2009, each manufacturer will be required to report once a year to NHTSA, its annual production of vehicles with advanced air bags. As previously explained, the reporting for the initial phase-in period will end with the information for the production year ending on August 31, 2005 and the reporting for the second phase-in will end with the information for the production year ending on August 31, 2009. The Office of Management and Budget has approved NHTSA's collection of this information, assigning the collection OMB clearance no. 2127–0599. NHTSA estimates that 1,260 burden hours a year (on all vehicle manufacturers) would be imposed as a result of this collection.

Since today's rule specifies a second phase-in period, we will ask OMB to extend clearance no. 2127–0599 for the additional period of time that the second phase-in period will last. OMB grants extensions of collections for no more than three years at a time. We do not believe that future phase-in report collections will result in burdens on the public of more than 1,260 burden hours (on all vehicle manufacturers) a year.

Air Bag Warning Labels—New air bag warning labels are specified in this final rule. At present, OMB has approved NHTSA's collection of labeling requirements under OMB clearance no. 2127–0512, *Consolidated Labeling Requirements for Motor Vehicles (Except the Vehicle Identification Number).* This clearance will expire on 6/30/2001, and is cleared for 71,095 burden hours on the public.

For the following reasons, NHTSA estimates that the new air bag warning labels would have no net increase in the information collection burden on the public. There are 24 motor vehicle manufacturers that will be affected by the air bag warning label requirement, and the labels will be placed on approximately 15,500,000 vehicles per year. The label will be placed on each vehicle once. Since, in this final rule, NHTSA specifies the exact content of the labels, the manufacturers will spend 0 hours developing the labels. NHTSA estimates the technical burden time (time required for affixing labels) to be .0002 hours per label. NHTSA estimates that the total annual burden imposed on the public as a result of the air bag warning labels will be 3,100 hours (15.5 million vehicles multiplied by .0002 hours per label). Since the labels specified in this final rule replace existing labels, no additional burden is imposed on manufacturers.

Advanced Air Bag Information in the Owner's Manual—This final rule requires advanced air bag information in the owner's manual that is in addition to the information already required under Standard No. 208. At present, OMB has approved NHTSA's collection of owner's manual requirements under OMB clearance no. 2127–0541 *Consolidated Justification of Owner's Manual Requirements for Motor Vehicles and Motor Vehicle Equipment.* This collection includes the burdens that would be imposed as a result of owners' manual information about air bags. This clearance will expire on 10/31/2001 and is cleared for 1,371 burden hours a year on all vehicle manufacturers.

H. Regulation Identifier Number (RIN)

The Department of Transportation assigns a regulation identifier number (RIN) to each regulatory action listed in the Unified Agenda of Federal Regulations. The Regulatory Information Service Center publishes the Unified Agenda in April and October of each year. You may use the RIN contained in the heading at the beginning of this document to find this action in the Unified Agenda.

I. Plain Language

Executive Order 12866 and the President's memorandum of June 1, 1998, require each agency to write all rules in plain language. Standard No. 208 is extremely difficult to read as it contains multiple cross-references and has retained all of the requirements applicable to vehicle of different classes at different times. Because portions of today's rule amend existing text, much of that complexity remains. Additionally, the availability of multiple compliance options, differing injury criteria and a dual phase-in have added to the complexity of the regulation, particularly as the various requirements and options are accommodated throughout the initial phase-in. Once the initial phase-in is complete, much of the complexity will disappear. At that time, it would be appropriate to completely revise Standard No. 208 to remove any options, requirements, and differentiations as to vehicle class that are no longer applicable.

J. Executive Order 13045

Executive Order 13045 (62 FR 19885, April 23, 1997) applies to any rule that: (1) is determined to be ''economically significant'' as defined under E.O. 12866, and (2) concerns an environmental, health or safety risk that NHTSA has reason to believe may have a disproportionate effect on children. If the regulatory action meets both criteria, we must evaluate the environmental health or safety effects of the planned rule on children, and explain why the planned regulation is preferable to other potentially effective and reasonably feasible alternatives considered by us.

This rulemaking directly involves decisions based on health risks that disproportionately affect children, namely, the risk of deploying air bags to children. However, this rulemaking serves to reduce, rather than increase, that risk.

K. National Technology Transfer and Advancement Act

Section 12(d) of the National Technology Transfer and Advancement Act (NTTAA) requires NHTSA to evaluate and use existing voluntary consensus standards [34] in its regulatory activities unless doing so would be inconsistent with applicable law (*e.g.,* the statutory provisions regarding NHTSA's vehicle safety authority) or otherwise impractical. In meeting that requirement, we are required to consult with voluntary, private sector, consensus standards bodies. Examples of organizations generally regarded as voluntary consensus standards bodies include the American Society for Testing and Materials (ASTM), the Society of Automotive Engineers (SAE), and the American National Standards Institute (ANSI). If NHTSA does not use available and potentially applicable voluntary consensus standards, we are required by the Act to provide Congress, through OMB, an explanation of the reasons for not using such standards.

[34] Voluntary consensus standards are technical standards developed or adopted by voluntary consensus standards bodies. Technical standards are defined by the NTTAA as ''performance-based or design-specific technical specifications and related management systems practices.'' They pertain to ''products and processes, such as size, strength, or technical performance of a product, process or material.''

We have incorporated the out-of-position tests one and two developed by the International Standards Organization (ISO) as part of the proposed low-risk deployment tests for the out-of-position 5th percentile adult female on the driver-side air bag and for the 6-year-old child on the passenger-side air bag. We have reviewed the proposed SAE seating procedure for the 5th percentile adult female in a dynamic crash test. We have decided against adopting this procedure because it has not yet been adopted by SAE and may not be adopted, in any form, for some time. No other voluntary consensus standards are addressed by this rulemaking.

Appendix A—Glossary

Air Bags—In General

Air bags are inflatable restraints. Enough gas must be pumped into them to cushion occupants. Otherwise, occupants, especially large ones, could ''bottom out'' the air bag and hit the vehicle interior in a crash. Thus, the amount of pressure within air bags must be carefully controlled. This is done by controlling both the rate at which gas is pumped into the air bag and the rate at which the gas is released from the air bag through vents or microscopic holes in the fabric itself.

Categories of Frontal Air Bags

Advanced air bags. Advanced air bags are air bags that minimize the risk of serious injury to out-of-position occupants and provide improved protection to occupants in high speed crashes. They accomplish this either by incorporating various technologies that enable the air bags to adapt their performance to a wider range of occupant sizes and crash conditions and/or by being designed to both inflate in a manner that does not pose such risk as well as to provide improved protection. Some of these technologies are multi-stage inflators, occupant position sensors, occupant weight and pattern sensors, and new air bag fold patterns. (The inflators and sensors are explained below.)

Redesigned air bags.[35] Redesigned air bags are bag systems used in vehicles that have been certified to the unbelted sled test option instead of the unbelted crash test option in Standard No. 208. Many of the redesigned air bags in MY 1998 and 1999 vehicles have less power than the air bags in earlier model years of that vehicle model. However, the power levels of current air bags vary widely. For example, the redesigned air bags in some current vehicles are more powerful than the unredesigned air bags in some earlier vehicles.

Inflators

Inflators are the devices which pump the gas into air bags to inflate them in a crash.

Single stage inflators. Single stage inflators fill air bags with the same level of power in all crashes, regardless of whether the crash is a relatively low or high speed crash.

Multi-stage inflators. Multi-stage inflators (also known as multi-level inflators) operate at different levels of power, depending on which stage is activated. The activation of the different stages can be linked to crash severity sensors. In a vehicle with dual-stage inflators, only the first stage (lowest level of power) will be activated in relatively low speed crashes, while the first and second stages (highest level of power) will be activated in higher speed crashes. As crash severity increases, so must the pressure inside the air bag in order to cushion the occupants.

Sensors

Many advanced air bag systems utilize various sensors to obtain information about crashes, vehicles and their occupants. This information is used to adapt the performance of the air bag to the particular circumstances of the crash. It is used in determining whether an air bag should deploy and, if it should, and if the air bag has multiple inflation levels, at what level. Examples of these sensors include the following:

Crash severity sensors. Crash severity sensors measure the severity of a crash, *i.e.,* the rate of reduction in velocity when a vehicle strikes another object. If a relatively low severity crash is sensed, only the lowest stage of a dual-stage inflator will fill the air bag; if a more severe crash is sensed, both stages will fill the air bag, inflating it at a higher level.

Belt use sensors. Belt use sensors determine whether an occupant is belted or not. An advanced air bag system in vehicles with crash severity sensors and dual-stage inflators might use belt use information to adjust deployment thresholds for unbelted and belted occupants. Since an unbelted occupant needs the protection of an air bag at lower speeds than a belted occupant does, the air bag would deploy at a lower threshold for an unbelted occupant. (Deployment thresholds are explained below.)

Seat position sensors. Seat position sensors determine how far forward or back a seat is adjusted on its seat track. An advanced air bag system could be designed so a dual-stage air bag deploys at a lower level when the seat is all the way forward than it does when the seat is farther back. This would benefit those short-statured drivers who move their seats all the way forward.

Occupant weight sensors. Occupant weight sensors measure the weight of an occupant. An advanced air bag system might use this information to prevent the air bag from deploying at all in the presence of children.

Pattern sensors. Pattern sensors evaluate the impression made by an occupant or object on the seat cushion to make determinations about occupant presence and the overall size and position of the occupant. They could also sense the presence of a particular object like a child seat. An advanced air bag system might use this information to prevent the air bag from deploying in the presence of children. An advanced air bag system might utilize both an occupant weight sensor and an occupant pattern sensor.

Deployment Thresholds

The term deployment threshold is typically used to refer to the lowest range of rate of reduction in vehicle velocity in a crash at which a particular air bag is designed to deploy.

No-fire threshold. The no-fire threshold is the crash speed below which the air bag is designed to never deploy.

All-fire threshold. The all-fire threshold is the crash speed at or above which the air bag is designed to always deploy.

Gray zone. The gray zone is the range of speeds between the no-fire and all-fire thresholds in which the air bag may or may not deploy.

Vehicles with advanced air bags may have different deployment thresholds for belted and unbelted occupants, *e.g.,* the deployment threshold may be higher if an occupant is belted. (See belt use sensors above.)

Crash Tests vs. Sled Tests

In crash tests, instrumented test dummies are placed in a vehicle which is then crashed into a barrier. Measurements from the test dummies are used to determine the forces, and estimate the risk of serious injury, that people would have experienced in the crash.

In sled tests, no crash takes place. The vehicle is placed on a sled-on-rails, and instrumented test dummies are placed in the vehicle. The sled and vehicle are accelerated very rapidly backward by means of a generic acceleration pulse. As the vehicle moves backward, the dummies move forward inside the vehicle in much the same way that people would in a frontal crash. The air bags are manually deployed at a pre-selected time during the sled test. Measurements from the dummies are used to determine the forces, and estimate the risk of serious injury, that people would have experienced if the vehicle experienced that level of deceleration.

Fixed Barrier Crash Tests

All of the crash tests adopted in this final rule are fixed barrier crash tests, *i.e.,* the test vehicle is crashed into a barrier that is fixed in place (as opposed to moving). The types of fixed barrier crash tests are shown in Figure 3.

Rigid barrier test, perpendicular impact. In a rigid barrier, perpendicular impact test, the vehicle is crashed straight into a rigid barrier that does not absorb any crash energy. The full width of the vehicle's front end hits the barrier.

Rigid barrier, oblique impact test. In a rigid barrier, oblique impact test, the vehicle is crashed at an angle into a rigid barrier.

Offset deformable barrier test. In an offset deformable barrier test, one side of a vehicle's front end, not the full width, is crashed into a barrier with a deformable face that absorbs some of the crash energy.

BILLING CODE 4910–59–P

[35] These air bags are also sometimes called depowered air bags, second generation air bags or next generation air bags.

Figure 3.
Types of Fixed Barrier Crash Tests

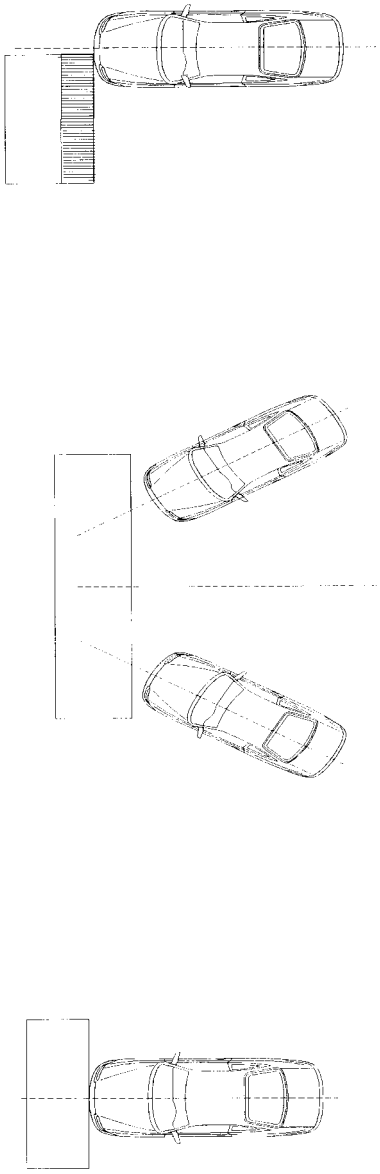

BILLING CODE 4910–59–C

Crash Pulses

A crash pulse is the graph or picture of how quickly the vehicle occupant compartment is decelerating at different times during a crash.

Stiff crash pulses. In crashes with stiff pulses, the occupant compartment decelerates very abruptly. An example of a crash with a stiff pulse would be a full head-on crash of a vehicle into a like vehicle. The perpendicular rigid barrier crash test produces a stiff crash pulse.

Soft crash pulses. In crashes with soft pulses, the occupant compartment decelerates less abruptly, compared to crashes with hard pulses. An example of a crash with a soft pulse would be the crash of a vehicle into sand-filled barrels such as those seen at toll booths or at the leading edge of a concrete median barrier. The offset deformable barrier crash test and the 30 degree oblique rigid barrier crash test produce soft crash pulses.

In crashes involving comparable reductions in velocity, an unrestrained occupant would hit the vehicle interior (i.e., steering wheel, instrument panel and windshield) at a much higher speed in a crash with a stiff pulse than in a crash with a soft pulse.

Belted and Unbelted Tests

Belted tests use belted dummies, while unbelted tests use unbelted dummies. Despite increases in seat belt use, nearly 50 percent of all occupants in fatal crashes are unbelted. Unbelted tests are intended to evaluate the protection provided these persons, many of whom are teenagers and young adults.

Static Low Risk Deployment Tests

Static out-of-position tests are called ''static'' because the vehicle does not move during the test. These tests are used to measure the risk that an air bag poses to out-of-position occupants. Test dummies are placed in specified positions that are extremely close to the air bag, typically with some portion of the dummy touching the steering wheel or instrument panel. The air bag is deployed. Measurements from the test dummy are used to determine the forces, and estimate the risk of serious injury, that people would have experienced in the crash.

Injury Criteria and Performance Limits—In general

In a crash test, sled test, or static out-of-position test, measurements are taken from the test dummy instruments that indicate the forces that a person would have experienced under the same conditions. Standard No. 208 specifies several injury criteria. For each criterion, the Standard also specifies a performance limit, based on the level of forces that create a significant risk of producing serious injury.

Injury Criteria

This final rule adopts performance limits for various injury criteria to address the risk of several types of injuries. Among these injury criteria are:

Head Injury Criterion or HIC. Head Injury Criterion or HIC addresses the risk of head injury;

Nij. Nij addresses the risk of neck injury; and *Chest Acceleration and Chest Deflection.* Chest Acceleration and Chest Deflection address the risk of chest injury.

Test Dummies

This final rule specifies the use of several test dummies to represent children and adults of different sizes. These dummies are:

12-month old Crash Restraints Air Bag Interaction (CRABI) dummy, representing an infant;

Hybrid III 3-year-old and 6-year-old child dummies, representing young children;

Hybrid III 5th percentile adult female dummy, representing a small woman;

Hybrid III 50th percentile adult male dummy, representing an average-size man.

Appendix B—Evolution of the Air Bag Provisions in Standard No. 208

The occupant protection requirements in Standard No. 208 have been evolving for more than 30 years. It is only relatively recently, however, that vehicle manufacturers have actually been required to install any air bags. Although vehicle manufacturers first installed air bags in a small number of vehicles in the mid-1970s and began installing air bags in a significant number of vehicles in the mid-1980s, it was not until the mid to late 1990s (MY 1997) that manufacturers were first required to install any air bags in any motor vehicle.

We issued our first notice concerning air bags in 1969. 34 FR 11148; July 2, 1969. In response to the low rate of seat belt use, we amended Standard No. 208 in 1971 to require automatic restraints (*i.e.,* devices like air bags and automatic belts that protect in frontal crashes without requiring any action by the occupant) in all passenger cars in 48 km/h (30 mph) crash tests beginning with MY 1976. 37 FR 3911; February 24, 1972.[36] In *Chrysler Corp. v. DOT,* the Sixth Circuit Court of Appeals upheld the basic validity of that requirement, finding it reasonable and practicable, but directed NHTSA to issue more precise test dummy specifications in order to achieve greater objectivity. After complying with that directive, NHTSA proposed automatic restraint requirements in 1974. We did not take final action on that proposal.

Instead, after issuing a new notice in 1976 (41 FR 24070; June 14, 1976) seeking comment on a variety of alternative actions including promoting seat belt use laws, requiring automatic restraints, and initiating a field test of automatic restraints, the Department decided in early 1977 to initiate a field test of automatic restraints. Pursuant to that decision, contracts were negotiated with vehicle manufacturers for the voluntary offering for sale of 500,000 automatic restraint passenger cars. It was anticipated that those passenger cars would be equipped with air bags.

However, this field test was never completed. Instead, in mid-1977, the Department decided to go ahead and once again mandate automatic restraints in passenger cars. 42 FR 34289; July 5, 1977. The requirements were to be phased in, beginning in MY1983. However, in 1981, NHTSA rescinded the requirements because it said that it was unable to find that more than minimal safety benefits would result from the vehicle manufacturers' plan to comply with the requirements by installing detachable automatic belts instead of air bags. 46 FR 53419; October 29, 1981.

In June 1983, the Supreme Court held that NHTSA's rescission of the automatic restraint requirements was arbitrary and capricious. *Motor Vehicle Manufacturers' Association* v. *State Farm Mutual Automobile Insurance Co.,* 463 U.S. 29 (1983). In particular, the Court found the agency had failed to present an adequate basis and explanation for rescinding the requirement.

The Court unanimously found that, even if the agency was correct that detachable automatic belts would yield few benefits, that fact alone would not justify rescission. Instead, it would justify only a modification of the requirement to prohibit compliance by means of that type of automatic restraint. The Court also unanimously held that having concluded that detachable automatic belts would not result in significantly increased usage, NHTSA should have considered requiring that automatic belts be continuous (*i.e.,* nondetachable) instead of detachable, or that Standard No. 208 be modified to require the installation of air bags.

In response to the Supreme Court's decision, the Department issued a proposal in late 1983 seeking public comment on an array of alternatives similar to those in the Department's 1976 notice. 48 FR 48622; October 19, 1983. Among those alternatives was mandating air bags.

However, when the Department issued a rule in 1984, it did not establish such a mandate. Instead, it required that some type of automatic restraint be installed in passenger cars. Thus, the manufacturers had a choice of a variety of methods of providing automatic protection, including automatic seat belts and air bags, as long as certain specified performance requirements were met in a 48 km/h (30 mph) crash test into a rigid barrier using 50th percentile adult male dummies. Further, the requirements gave vehicle manufacturers broad flexibility in selecting the design and performance characteristics of their automatic restraints as long as they met the performance requirements.

The Department expressly recognized in its 1984 rule that the vehicle manufacturers had raised concerns about potential adverse effects of air bags to out-of-position occupants. In response to those concerns, the Department identified a variety of technological concepts for addressing those risks. See the July 11, 1984 Final Regulatory

[36] Passenger cars manufactured between August 1973 and August 1975, could meet the requirements of FMVSS No. 208 through any of three options, two of which were for automatic restraints. One of the automatic restraint options required automatic protection in frontal crashes and required manual seat belts at each designated seating position. The other automatic restraint option required automatic protection in frontal, side and rollover crashes and did not require any seat belts in the vehicle. The other option was for manual seat belts. *Cf.* 49 CFR 571.208 S4.1.2. These options were later extended in several rulemakings to August 31, 1986.

Impact Analysis, pp. III–8 to 10.[37] The flexibility provided by the 1984 rule included the opportunity for vehicle manufacturers to develop and incorporate those technologies, now known as advanced air bag technologies. However, that rule (unlike the one being adopted today) did not adopt any regulatory provisions requiring or encouraging the use of those technologies.

The automatic protection requirements were phased in, beginning with MY 1987. Later, the requirements were extended to light trucks, beginning with MY 1995.

A number of vehicle manufacturers initially chose to comply with those requirements by installing automatic belts in many of their vehicles. However, ultimately, the early decisions of some manufacturers to install air bags as standard equipment and the positive response of the market to those decisions led to a general move within the industry toward installing air bags in many passenger cars and light trucks by the early 1990's.

In 1991, Congress included a provision in the Intermodal Surface Transportation Efficiency Act (ISTEA) directing us to amend Standard No. 208 to require that all passenger cars and light trucks provide automatic protection by means of air bags.[38] ISTEA required air bags in all passenger cars beginning with MY 1998, and in all light trucks beginning with MY 1999. We published the rule implementing this mandate on September 2, 1993 (58 FR 46551).

Like the automatic restraint requirements issued in 1984, the air bag requirements issued in 1993 were performance requirements that did not specify the design of an air bag system. Instead, they gave vehicle manufacturers substantial design flexibility. They permitted, but did not require, vehicle manufacturers to develop and use advanced air bag technologies in designing their air bags to minimize the risks from air bags, in particular, the risk of serious injury to unbelted, out-of-position occupants, including children and small drivers.

Thus, the manufacturers had significant freedom under Standard No. 208 to develop and install means of protecting the wide variety of occupants under a broad range of crash conditions, such as the types of crashes, the crash speeds at which the air bags deploy, the initial direction in which they deploy, the force with which they deploy, the time of deployment during the crash, air bag tethering and venting to control inflation force when a deploying air bag encounters an occupant close to the steering wheel or dashboard, the use of sensors to suppress air bag inflation in the presence of rear-facing child restraints or the presence of small children, the use of sensors to detect occupant position to prevent air bag inflation if appropriate, and the use of multi-stage inflators to adjust air bag force to the crash situation. Multi-stage inflators allow tailoring of air bag performance to match the circumstances of a crash. For example, air bag deployment can be tailored in response to crash severity so that force levels are lower in less severe crashes than they are in more severe crashes. The less severe crashes are the type of crashes in which full force is not needed and in which air bag-induced fatalities to out-of-position occupants have occurred.

Until March 1997, the injury criteria limits in Standard No. 208 had to be met for air bag-equipped vehicles in barrier crashes at speeds up to 48 km/h (30 mph), with the 50th percentile adult male dummies wearing seat belts, and in separate barrier crashes at those speeds with dummies unbelted. Then, however, concerns about the rising number of air bag-induced fatalities led us to publish a rule (62 FR 12960; March 19, 1997) providing manufacturers with the option of certifying the air bag performance of their vehicles with an unbelted dummy in a sled test incorporating a 125 millisecond standardized crash pulse instead of in a vehicle-to-barrier crash test. We adopted this amendment for two principal reasons. First, the lead time for reducing a significant portion of the risk of air bag-induced fatalities through reducing the force of air bags as they deploy (*i.e.,* depowering) was shorter than the lead time for addressing those risks through developing and installing advanced air bag technologies. Second, allowing manufacturers to use the less stringent, less expensive and easier to conduct sled test made it easier to maintain compliance with Standard No. 208 while depowering their air bags and making other design changes. This shortened the lead time for depowering, compared to the time it would have taken to recertify vehicles with depowered air bags using a barrier crash test.

In the March 1997 rule, we specified that the sled test option would terminate on September 1, 2001. We concluded that there was no need to reduce Standard No. 208's performance requirements permanently, based on our belief in 1997 that advanced air bag technologies could be incorporated into new vehicles by 2001 and thus enable manufacturers to reduce air bag risks while continuing to meet the 48 km/h (30 mph) unbelted barrier crash test.

The September 1, 2001 sunset date for the sled test option was superseded by a provision in TEA 21. In a paragraph titled ''Coordination of Effective Dates,'' TEA 21 provides that the unbelted sled test option ''shall remain in effect unless and until changed by [the final rule for advanced air bags].''

Appendix C—Chronology of DOT and NHTSA Responses to Air Bag Risks and Fatalities

A. Introduction

As the following chronology demonstrates, DOT/NHTSA have repeatedly and publicly addressed the issue of risk to out-of-position occupants from air bags in regulatory decisions about automatic restraints and air bags for more than 20 years. More important, concerns about that issue helped to shape the DOT/NHTSA regulatory decisions during 1980s and 1990s.

B. Chronology

In its 1977 rule requiring automatic restraints, the Department discussed the possibility of ''side effects of air bag installation'' at length. That discussion included the issue of risks for out-of-position occupants. 42 FR 34289; July 5, 1977.

In 1981, Minicars, Inc., a NHTSA research contractor, issued reports on the successful efforts to build and test devices, including dual-stage inflators, for controlling passenger air bag inflation so as to avoid harming out-of-position children.[39]

In deciding in 1984 to issue rule requiring automatic restraints, the Department considered vehicle manufacturer comments that air bags would pose risks to out-of-position occupants, particularly in small cars. The lack of experience with the technical means for addressing those risks was one of the reasons expressly cited by the Department for rejecting the alternative of mandating air bags. 49 FR 28962, at 29001; July 17, 1984.

While the Department noted in the 1984 rule that use of technical solutions such as sensors to adjust deployment could lessen the problem, it said that it could not ''state for certain that air bags will never cause injury or death to a child.'' As discussed above, other technical solutions were identified in the Final Regulatory Impact Analysis for that rule, including dual-stage inflation systems and other technological measures such as bag shape and size, instrument panel contour, aspiration, and inflation technique. It also noted that a variety of different sensors could be used to trigger dual-stage inflation systems.

In 1985, NHTSA denied petitions for reconsideration of the 1984 rule. NHTSA noted that the 1984 ''final rule acknowledged concerns about the effects of air bag systems on out-of-position occupants; however, it also explained that technical solutions are available to address the out-of-position occupant problem.'' NHTSA said that

[37] The July 11, 1984 Final Regulatory Impact Analysis (FRIA) listed a variety of potential technological means for addressing the problem of injuries associated with air bag deployments including dual level inflation systems and other technological measures such as bag shape and size, instrument panel contour, aspiration, and inflation technique. It also noted that a variety of different sensors could be used to trigger dual level inflation systems, *e.g.,* a sensor that measures impact speed, a sensor that measures occupant size or weight and senses whether an occupant is out of position; and an electronic proximity sensor.

For the most part, the introduction of these technologies in new motor vehicles did not begin until the late 1990's. A number of the vehicle manufacturers are known to be working now very actively on an array of advanced air bag technologies.

[38] TEA 21 is thus the second Congressional act narrowing the discretion provided by the Department's 1984 rule regarding automatic protection. That rule mandated automatic protection, but explicitly provided discretion with respect to the type of automatic protection (*e.g.,* automatic seat belts and air bags), and implicitly allowed the use of advanced air bag technologies.

ISTEA mandated the installation of air bags. TEA 21 mandates the use of advanced air bag technologies or other means to reduce air bag-induced risks.

[39] ''Small Car Front Seat Passenger Inflatable Restraint System (Vol. I—Chevette and Omni),'' ''Small Car Front Seat Passenger Inflatable Restraint System (Vol. II—Citation),'' ''Upgrade Volvo Production Restraint System.''

concerns about air bag risks and a variety of other factors led to the Department's decision not to mandate air bags for all cars. 50 FR 35233, at 35234; August 30, 1985.

Two years later, in 1987, NHTSA amended Standard No. 208 to delay the requirement for any type of automatic restraint for the passenger seating position in a passenger car if the car had a driver air bag. This action was taken in response to a petition by Ford. The agency said that the length of the delay was based on the time that the vehicle manufacturers said was necessary to complete the development and installation of passenger air bags. Ford said in its petition that there were a number of uncertainties, including technical problems, concerning the development of those air bags. Ford said that it was concerned that passenger air bags could pose risks for standing children and other occupants who are out of position due, for example, to pre-crash braking. It said, however, that it expected to solve these problems if its petition were granted so that it could proceed in an orderly, controlled manner to gain experience with passenger-side applications. 52 FR 10096; March 30, 1987.

In 1991, NHTSA issued a rule amending Standard No. 201, Occupant Protection in Interior Impact, 49 CFR 571.201, to facilitate installation of top-mounted, vertically deploying passenger air bags. This rulemaking was conducted in response to a petition by Chrysler, which said that this type of air bag would reduce the risks for standing children and out-of-position occupants. Ford and GM supported the petition and concurred that these air bags had the potential for reducing risks to out-of-position children and adults. 56 FR 26036; June 6, 1991.

Also in 1991, NHTSA issued a Consumer Advisory warning owners of rear-facing child seats not to use such a restraint in the front seat of a vehicle equipped with a passenger air bag. This warning was based on preliminary results of testing regarding this problem. At that time, no casualties to infants had occurred.

In the 1993 rule implementing the air bag mandate in ISTEA, NHTSA required vehicles equipped with air bags to bear labels on the sun visors providing four specific cautions, including a statement not to install rearward-facing child seats in front passenger positions, and advising the occupant to see the owner's manual for further information and explanations. 58 FR 46551; September 2, 1993.

In 1994, NHTSA issued a rule amending Standard No. 213, Child Restraint Systems, to require rear-facing child seats to bear a warning against using the restraint in any vehicle seating position equipped with an air bag. 59 FR 7643; February 16, 1994.

In 1995, NHTSA issued a rule allowing manufacturers to install a manual device that motorists could use to deactivate the front passenger-side air bag in vehicles in which rear-facing child seats can only fit in the front seat. 60 FR 27233; May 23, 1995. On October 27, 1995, in response to several fatalities to improperly-restrained children in air bag-equipped positions, NHTSA issued a strong warning in a press release. This release broadened the previous agency warnings about young children to apply to older children and even adults who may ride unrestrained.

In 1996, the agency issued a rule requiring improved labeling on new vehicles and child restraints to provide greater assurance that drivers and other occupants are aware of the dangers posed by passenger air bags to children, particularly to children in rear-facing infant restraints in vehicles with operational passenger air bags. 61 FR 60206; November 27, 1996.

In 1997, the agency took three important steps to address air bag risks through vehicle safety rulemaking. First, we issued a rule extending until September 1, 2000, the existing provision permitting vehicle manufacturers to offer manual on-off switches for the passenger air bag for new vehicles without rear seats or with rear seats that are too small to accommodate rear-facing infant restraints. 62 FR 798; January 6, 1997. Second, we issued a rule temporarily amending Standard No. 208 to facilitate efforts of vehicle manufacturers to redesign their air bags quickly so that they inflate less aggressively. This change, coupled with the broad flexibility already provided by the standard's existing performance requirements, provided the vehicle manufacturers maximum flexibility to reduce the adverse effects of current air bags quickly. 62 FR 12960; March 19, 1997. Third, we issued a rule exempting, under certain conditions, motor vehicle dealers and repair businesses from the ''make inoperative'' prohibition of 49 U.S.C. 30122 by allowing them to install retrofit manual on-off switches for air bags in vehicles owned by people whose request for a switch had been authorized by NHTSA. 62 FR 62406; November 21, 1997.

Appendix D—Installation of Advanced Technologies in Current Production Motor Vehicles

A. Introduction

The level of risk of air bag-induced fatalities depends to a significant extent on air bag system design. There are various advanced air bag technologies that have been or are being developed and that, if incorporated in air bag systems, can improve protection of occupants of different sizes, belted and unbelted, and minimize the risks from air bags.[40] For example, an air bag need not be designed so that it inflates with full force under all circumstances. Dual-stage inflators can be used in combination with various types of sensors (*e.g.,* crash severity, seat position, and belt use) and improved algorithms to adjust the deployment threshold or air bag inflation pressure and pressure rise rate and thereby reduce risk. Different folding patterns and aspiration designs, as well as systems that suppress air bag deployment altogether in appropriate circumstances, also could reduce risk. For example, higher speed deployment thresholds could prevent deployment in low speed crashes, and weight sensors could be used to prevent deployment when children are present. In addition, recessed air bag modules, compartmentalized and internally-tethered air bags, bias flaps, and low break-out force covers could make deploying air bags more benign for out-of-position occupants.

B. Key Parts of Air Bag Systems

In analyzing potential improvements in air bag system performance, it is useful to divide the system into 3 discrete parts:

1. *Information:* Acquiring information about crashes and occupants,
2. *Analysis/Decision:* Analyzing that information to determine the nature of the crash and the circumstances of the front seat occupants, and deciding how to adjust the response of the air bag system accordingly, and
3. *Response:* Adjusting the performance of the air bag in response to the decisions regarding the acquired information.

Air bag systems acquire information through the use of sensors. All air bag systems have some kind of crash sensor indicating the occurrence of a crash and its severity. The systems process information from the sensors and use an algorithm to make decisions on the desired air bag deployment and performance based on predictions about the crash event. The systems may also have sensors which provide information about such things as belt use, child seat use, occupant weight and size, seat adjustment position, and occupant location. The information from the sensors is used by the electronic control unit in making decisions as to whether and when the air bag is to be deployed. Air bags using advanced technologies could use the information to tailor the inflation levels of multi-stage air bags.

The information, analysis/decision, and response aspects of air bag systems each offer opportunities for improving occupant protection. With more and better information, improved decision-making algorithms, and greater adjustment capability to tailor the inflation, an air bag system can be designed to provide an improved response.

For example, with improved information about crash severity, the deploy/don't deploy decision can be made earlier in a crash. By deploying earlier during a crash, before the occupant has moved very far forward, the air bag can better protect the occupant and is less likely to pose risks to the occupant. If an air bag system includes sensors which provide information about occupant weight and/or size or location, it can be designed to suppress deployment in the presence of a young child or to deploy differently for small adults and large adults (*e.g.,* a lower level of inflation for a smaller adult than that for a larger one).

While some aspects of improved performance are dependent on more or better

[40] Air bag systems are only one of many automotive applications of increasingly sophisticated technology. Equally sophisticated technology is being used in many other existing vehicle systems as well as in entirely new ones. Examples include backup obstacle detection warning systems, adaptive cruise controls, rollover sensors, rain-activated windshield wiper systems, global positioning systems, head-up displays of information on the windshield, night vision systems, antilock braking systems, and tire pressure monitoring systems.

sensor information, others are not. For example, while a suppression device requires information about occupant category or location, other approaches that could reduce air bag aggressiveness, such as improved fold patterns, lighter weight air bag fabrics, air bag cover design, low break-out force openings, tethering and bias flaps are not information-dependent.

C. Specific Advanced Technologies

Sensors—General. Advanced air bag systems can use various types of sensors to obtain information about crashes, vehicles and their occupants. This information can be used to adapt the performance of the air bag to the particular circumstances of the crash. As noted above, it can be used in determining whether an air bag should deploy, when it should deploy, and (if it has multiple inflation levels) at what level of inflation (pressure rise) and inflation rate (pressure rise rate).

Sensors—Crash severity. Crash severity sensors measure the severity of a crash; *i.e.,* the rate of reduction in velocity when a vehicle strikes another object. If a relatively low severity crash is sensed, only the lowest stage of a dual-stage inflator will fill the air bag; if a moderate severity crash is sensed, both stages will fill the air bag with a specific time delay between the two stages; and if a more severe crash is sensed, both stages will fill the air bag either simultaneously or with a 5–10 msec interval in between the stages.

Improvements are being made in crash sensing hardware to provide earlier crash detection and more accurate estimates of crash severity and proper decision for timely deployment. Current trends in crash sensor hardware involve the use of either a single-point electronic sensor or a combination of electromechanical and electronic sensors.[41] Electronic sensors use microprocessor technology to compute the deceleration time history of the vehicle along with the integration of various other input factors to determine whether air bag deployment is appropriate.

Sensors—Passenger weight and seat pattern. Passenger air bag systems may incorporate advanced technologies to suppress the air bag in the presence of children to prevent undesirable deployments. To accomplish this, manufacturers are refining seat weight or seat pattern recognition systems for detecting passenger occupant size and/or position.

For example, some occupant detection systems will use an array of sensors in the seat cushion to measure either the pressure distribution or deflection pattern resulting from the occupant in the seat to make a determination on whether to deploy or suppress the air bag system. Child safety seats, for example, are more readily identifiable by these systems, since they have a distinct ''footprint'' when compared to the human buttocks.

Weight sensing systems estimate the weight of the occupant through various load cell technologies located in the seat cushion or at the base of the seat. The latter approach has the potential for avoiding the possible difficulties that can be created for seat-cushion weight sensors when the seat back is tilted back enough to transfer a significant portion of the occupant's weight from the seat cushion to the seat back. The algorithms associated with these devices can be designed to take into consideration and minimize the effects of belt cinch forces (for example, from child safety seats) by using belt tension-measuring hardware to make an adjusted assessment of weight.

Sensors—Occupant size and/or location. Other advanced occupant detection systems under development use technologies, such as capacitive, ultrasonic, and infrared, for sensing occupant size and/or location with respect to the air bag module. These are used in the development of dynamic and static suppression strategies.

Strategies for static occupant detection systems[42] include the ability to make a determination of whether air bag deployment is warranted (or what level of inflation is appropriate) for the size and/or position of the occupant (*e.g.,* whether the occupant is a small child or a full-sized adult, or whether the occupant is against the seat back or is sitting on the edge of the seat, closer to the air bag). These technologies may be used in conjunction with seat weight sensing/pattern recognition systems (or seat belt use and crash severity sensing) to improve the reliability of the occupant classification and location estimates.

Dynamic suppression strategies using advanced technologies, such as capacitive, ultrasonic, and infrared, will be able to make dynamic assessments of when an occupant is out of position by determining the location of the occupant during the course of a crash. These technologies must have rapid sensing capabilities and algorithms to make the air bag deployment or suppression decision, for example, in the event of pre-impact braking. These systems would have the added benefit of protecting not only children, but also out-of-position adults. (Note: This is another advanced technology still under development.)

Sensors—Belt use or forward/aft seat adjustment position. Air bag systems may be linked to sensors that determine whether the occupant is using his or her seat belt and whether the occupant has positioned the vehicle seat along the seat track (*i.e.,* all or nearly all the way forward or farther back). An advanced air bag system in vehicles with crash severity sensors and dual-stage inflators could use seat belt use information to adjust deployment thresholds or inflation levels depending on whether the occupant is belted or unbelted. Since an unbelted occupant is more susceptible than a belted occupant to injury in less severe crashes, the unbelted occupant needs the protection of an air bag at lower crash severities than a belted occupant does. Accordingly, the air bag would deploy at a lower threshold for an unbelted occupant.

Seat position sensors determine how far forward or back a seat is adjusted on its seat track. An advanced air bag system could be designed so a dual-stage air bag deploys at a lower level when the seat is all the way forward than it does when the seat is farther back. This would benefit those short-statured drivers who move their seats all the way forward, or mid-to-tall-statured drivers who move their seats farther back.

In the MY 2000 Ford Taurus/Mercury Sable, the air bag system will fire the low energy strategy for the driver air bag when the seat is positioned in or near the full forward position. This provides a more benign deployment for small-statured occupants who sit closer to the air bag. Ford also provides the option of installing adjustable pedals on some of its vehicle platforms to assist driver occupants in positioning themselves further away from the air bag. Both seat position sensors and adjustable pedals can be used in conjunction with the previously mentioned seat belt use and crash severity information to affect air bag performance.

Multiple crash severity thresholds. Some current production motor vehicles are using information from crash severity sensors in conjunction with seat belt use sensors to select the appropriate crash severity threshold levels for belted and unbelted occupants. For instance, dual speed thresholds for deploying air bags have been used in Mercedes-Benz vehicles produced for the U.S. market for several years. In these vehicles, the lower threshold for air bag deployment is approximately 19 km/h (12 mph) when occupant is unbelted and a higher threshold of approximately 29 km/h (18 mph) is utilized when the an occupant is belted. A belt buckle switch provides the information to allow the selection between these two thresholds. Other vehicle manufacturers also have implemented similar strategies.

Multiple levels of inflation. In addition to using crash severity and seat belt use information for dual threshold strategies, this information also can be utilized to employ different inflation levels for belted and unbelted occupants through the use of a multi-stage air bag inflator. For instance, a belted occupant may only need a low powered inflation level, since the seat belts also provide restraint, while an unbelted occupant may require a full-powered air bag to provide a timely inflation and full protection by the air bag. Similarly, the crash severity information may be used with a multi-stage inflator to employ a low level of air bag inflation in a low severity crash or a full power inflation in a high severity crash, in which additional restraint is needed for occupant protection.

Improved seat belt systems. Many advances have also been made in seat belt systems to improve their performance when used in conjunction with air bag systems. These systems can reduce the risk of air bag-induced injury to a belted occupant. Many production vehicles (approximately 180

[41] Based on information from the responses to the December 1997 IR, 44 percent of the MY 1998 vehicles in the IR fleet had only one crash sensor and 73 percent had either a single electronic or a combination electronic and electromechanical.

[42] Static detection systems monitor steady state conditions such as occupant weight. In contrast, dynamic detection systems continuously monitor an occupant's position in relation to the air bag module.

vehicle models)[43] are providing seat belt energy management features and/or pretensioners in MY 2000 vehicles. Pretensioners are devices that retract the seat belt to remove excess slack during a crash event. Energy management features, such as load limiting retractors or webbing tear stitching, allow yielding of the seat belt system in order to prevent too much force from being imposed on the occupant's upper chest or lap during a severe crash. This rule's adoption of a higher belted test speed is intended to encourage vehicle manufacturers to consider the use of such advanced technologies. Additional seat belt enhancements include adjustable anchorages, which allow the positioning of the shoulder strap to accommodate a person's size, and integrated seat belt systems, which mount the entire seat belt system directly into the seat to allow better belt fit and restraint performance. Development work also is being done on seat belt webbing spool-out sensors, which could provide additional information about an occupant's size and movement in relation to the air bag module.

Improved air bag hardware. Manufacturers also have made advances in integrating countermeasures into the air bag hardware to mitigate injuries without compromising high speed occupant protection. For example, the driver air bag system of the MY 1999 Saturn SL1 has been designed with a number of injury-mitigating countermeasures. These include a patented I-tear seam cover, a unique air bag fold, recessed air bag module, 4 internal tether straps, and an air bag whose depth and volume are relatively small. The MY 1999 Saturn SL1 passenger air bag also includes an internal bias flap, which redirects the flow of gas laterally instead of toward the occupant.

Other available air bag hardware countermeasures which minimize the risks to out-of-position occupants include:

Low break-out force covers—By reducing the amount of force needed for an air bag to break out of the module housing in the steering wheel or instrument panel, these covers help make it possible to reduce the ''punch out'' effect of deploying air bags.

Radial deployment paths—For an air bag with a radial deployment path, the initial primary thrust of the deploying air bag is radial instead of toward the person sitting in front of the air bag.

Compartmented air bags—These air bags can function as an air bag within an air bag. If coupled with a dual-stage inflator, the first stage can inflate the smaller, inner air bag for small adults seated near the steering wheel and both stages can inflate the full air bag.

Pyrotechnic venting—One means of reducing the aggressiveness of a deploying air bag is to provide an alternative inflation path for venting air bag gases. If an out-of-position occupant is putting pressure on the air bag, the pressure can be vented in a different direction. This can be achieved through vent holes in the inflator canisters or pyrotechnically actuating vents which close holes in the reaction surface of the inflator canister.

Air bag aspiration—Another means of reducing the aggressiveness of a deploying air bag is to use an aspirated inflation system to draw in outside air into the gas stream as the air bag is being filled. If an out-of-position occupant interferes with the deployment of the air bag, the pressure within the bag will increase, and the aspirating system would cease operating as soon as that increased pressure within the air bag reaches a predetermined design level.

D. Installation of Advanced Technologies in Current Production Motor Vehicles

A steadily increasing number of passenger car models are now being equipped with some types of advanced air bag technologies. Many of these models are foreign luxury vehicles. However, both the MY2000 versions of the second best selling (Honda Accord) and third best selling (Ford Taurus) non-luxury passenger car models in calendar year 1999 are equipped with dual-stage air bags and various advanced technology sensors. While these air bag technologies are not sufficient by themselves to enable these vehicles to comply with this rule, their introduction is indicative of future possibilities.

A partial list of MY 2000 models equipped with advanced air bag technologies appears below:

Acura 3.5 RL and 3.2 TL are equipped with:
- Dual-stage passenger air bag[44]
- Advanced crash severity sensor
- Passenger belt use sensor

BMW 3- and 5-models are equipped with:
- Advanced crash severity sensor
- Dual-threshold deployment for driver and passenger air bag
- Sensor to help prevent unnecessary deployment of passenger air bag

BMW 7-series models are equipped with:
- Advanced crash severity sensor
- Dual-threshold deployment for driver and passenger air bags
- Dual-stage passenger air bag
- Sensor to help prevent unnecessary deployment of passenger air bag

BMW X5 is equipped with:
- Dual-stage driver and passenger air bags
- Advanced crash severity sensor
- Driver and passenger belt use sensor
- Dual-threshold deployment for driver and passenger air bags

BMW Z3 and BMW M coupe/roadster are equipped with:
- Dual-threshold deployment for driver and passenger air bags
- Sensor to help prevent unnecessary passenger air bag deployment

Ford Taurus and Mercury Sable are equipped with:
- Dual-stage driver and passenger air bags
- Advanced crash severity sensor
- Driver seat position sensor
- Driver belt use sensor
- Power adjustable accelerator and brake pedals

Honda Accord is equipped with:
- Dual-stage passenger air bag
- Advanced crash severity sensor
- Passenger belt use sensor

Mercedes S-class and CL coupe are equipped with:
- Passenger air bag features dual inflation rates based on impact severity.
- Advanced crash severity sensor

Volvo S80 is equipped with:
- Passenger belt use sensor
- Dual deployment threshold for driver and passenger air bags

List of Subjects

49 CFR Part 552

Administrative practice and procedure, Motor vehicle safety, Reporting and recordkeeping requirements.

49 CFR Part 571

Imports, Incorporation by reference, Motor vehicle safety, Reporting and recordkeeping requirements, Tires.

49 CFR Part 585

Motor vehicle safety, Reporting and recordkeeping requirements.

49 CFR Part 595

Imports, Motor vehicle safety, Motor vehicles.

In consideration of the foregoing, NHTSA amends 49 CFR Chapter V as follows:

PART 552—PETITIONS FOR RULEMAKING, DEFECT, AND NON-COMPLIANCE ORDERS

1. The authority citation for Part 552 of Title 49 continues to read as follows:

Authority: 49 U.S.C. 30111, 30118, and 30162; delegation of authority at 49 CFR 1.50.

2. Sections 552.1 through 552.10 are designated as Subpart A and a new subpart heading is added to read as follows:

Subpart A—General

3. A new subpart B is added to Part 552 to read as follows:

Subpart B—Petitions for Expedited Rulemaking to Establish Dynamic Automatic Suppression System Test Procedures for Federal Motor Vehicle Safety Standard No. 208, Occupant Crash Protection

Sec.
552.11 Application.
552.12 Definitions.
552.13 Form of petition.
552.14 Content of petition.
552.15 Processing of petition.

[43] NHTSA brochure DOT HS 808 988: ''Buying a Safer Car 2000,'' September 1999.

[44] According to the Acura website, the air bag system: automatically adjusts the deployment of the front passenger's air bag SRS based on the severity of the crash and whether or not the passenger is wearing the seat belt. During a slow speed collision, the dual-stage inflator system for the dash-mounted air bag is triggered in sequence, resulting in slower overall air bag deployment with less initial force. During a higher speed-collision, both inflators operate simultaneously for full immediate inflation in order to correspond with the greater impact force.

Subpart B—Petitions for Expedited Rulemaking to Establish Dynamic Automatic Suppression System Test Procedures for Federal Motor Vehicle Safety Standard No. 208, Occupant Crash Protection

§ 552.11 Application.

This subpart establishes procedures for the submission and disposition of petitions filed by interested parties to initiate rulemaking to add a test procedure to 49 CFR 571.208, S28.

§ 552.12 Definitions.

For purposes of this subpart, the following definitions apply:

(a) *Dynamic automatic suppression system (DASS)* means a portion of an air bag system that automatically controls whether or not the air bag deploys during a crash by:

(1) Sensing the location of an occupant, moving or still, in relation to the air bag;

(2) Interpreting the occupant characteristics and location information to determine whether or not the air bag should deploy; and

(3) Activating or suppressing the air bag system based on the interpretation of characteristics and occupant location information.

(b) *Automatic suppression zone (ASZ)* means a three-dimensional zone adjacent to the air bag cover, specified by the vehicle manufacturer, where air bag deployment will be suppressed by the DASS if a vehicle occupant enters the zone under specified conditions.

(c) *Standard No. 208* means 49 CFR 571.208.

§ 552.13 Form of petition.

Each petition filed under this subpart shall—

(a) Be submitted to: Administrator, National Highway Traffic Safety Administration, 400 Seventh Street, S.W., Washington, DC 20590.

(b) Be written in the English language.

(c) State the name and address of the petitioner.

(d) Set forth in full the data, views and arguments of the petitioner supporting the requested test procedure, including all of the content information specified by § 552.14. Any documents incorporated by reference in the procedure shall be submitted with the petition.

(e) Specify and segregate any part of the information and data submitted that the petitioner wishes to have withheld from public disclosure in accordance with Part 512 of this chapter including, if requested, the name and address of the petitioner.

(f) Not request confidential treatment for the requested test procedure and, to the extent confidential treatment is requested concerning a particular DASS or data and analysis submitted in support of the petition, provide a general non-confidential description of the operation of the DASS and of the data and analysis supporting the petition.

(g) Set forth a requested effective date and be submitted at least nine months before that date.

§ 552.14 Content of petition.

The petitioner shall provide the following information:

(a) A set of proposed test procedures for S28.1, S28.2, S28.3, and S28.4 of Standard No. 208 which the petitioner believes are appropriate for assessing a particular DASS.

(1) For S28.1 of Standard No. 208, the petitioner shall specify at least one specific position for the Part 572, subpart O 5th percentile female dummy that is:

(i) Outside but adjacent to the ASZ, and

(ii) Representative of an unbelted occupant position that is likely to occur during a frontal crash.

(2) For S28.2 of Standard No. 208, the petitioner shall specify at least one specific position for the Part 572 Subpart P 3-year-old child dummy and at least one specific position for the Part 572 Subpart N 6-year-old child dummy that are:

(i) Outside but adjacent to the ASZ, and

(ii) Representative of unbelted occupant positions that are likely to occur during a frontal crash where pre-crash braking occurs.

(3) For S28.3 of Standard No. 208, the petitioner shall specify a procedure which tests the operation of the DASS by moving a test device toward the driver air bag in a manner that simulates the motion of an unbelted occupant during pre-crash braking or other pre-crash maneuver. The petitioner shall include a complete description, including drawings and instrumentation, of the test device employed in the proposed test. The petitioner shall include in the procedure a means for determining whether the driver air bag was suppressed before any portion of the specified test device entered the ASZ during the test. The procedure shall also include a means of determining when the specified test device occupies the ASZ.

(4) For S28.4 of Standard No. 208, the petitioner shall specify a procedure which tests the operation of the DASS by moving a test device toward the passenger air bag in a manner that simulates the motion of an unbelted occupant during pre-crash braking or other pre-crash maneuver. The petitioner shall include a complete description, including drawings and instrumentation, of the test device employed in the proposed test. The petitioner shall include in the procedure a means for determining whether the passenger air bag was suppressed before any portion of the specified test device entered the ASZ during the test. The procedure shall also include a means of determining when the specified test device occupies the ASZ.

(b) A complete description and explanation of the particular DASS that the petitioner believes will be appropriately assessed by the recommended test procedures. This shall include:

(1) A description of the logic used by the DASS in determining whether to suppress the air bag or allow it to deploy. Such description shall include flow charts or similar materials outlining the operation of the system logic, the system reaction time, the time duration used to evaluate whether the air bag should be suppressed or deployed, changes, if any, in system performance based on the size of an occupant and vehicle speed, and a description of the size and shape of the zone where under similar circumstances and conditions the DASS may either allow or suppress deployment. Such description shall also address whether and how the DASS discriminates between an occupant's torso or head entering the ASZ as compared to an occupant's hand or arm, and whether and how the DASS discriminates between an occupant entering the ASZ and an inanimate object such as a newspaper or ball entering the ASZ.

(2) Detailed specifications for the size and shape of the ASZ, including whether the suppression zone is designed to change size or shape depending on the vehicle speed, occupant size, or other factors.

(c) Analysis and data supporting the appropriateness, repeatability, reproducibility and practicability of each of the proposed test procedures.

(1) For the procedures proposed for inclusion in S28.1 and S28.2 of Standard No. 208, the petitioner shall provide the basis for the proposed dummy positions, including but not limited to, why the positions are representative of what is likely to occur in real world crashes.

(2) For the procedures proposed for inclusion in S28.3 and S28.4 of Standard No. 208, the petitioner shall provide:

(i) A complete explanation of the means used in the proposed test to

ascertain whether the air bag is suppressed or activated during the test.

(ii) A complete description of the means used to evaluate the ability of the DASS to detect and respond to an occupant moving toward an air bag, including the method used to move a test device toward an air bag at speeds representative of occupant movement during pre-crash braking or other pre-crash maneuver.

(iii) The procedure used for locating the test device inside a test vehicle in preparation for testing, including an accounting of the reference points used to specify such location.

(iv) An explanation of the methods used to measure the amount of time needed by a suppression system to suppress an air bag once a suppression triggering event occurs.

(v) High speed film or video of at least two tests of the DASS using the proposed test procedure.

(vi) Data generated from not less than two tests of the DASS using the proposed test procedure, including an account of the data streams monitored during testing and complete samples of these data streams from not less than two tests performed under the proposed procedure.

(d) Analysis concerning the variety of potential DASS designs for which the requested test procedure is appropriate; e.g., whether the test procedures are appropriate only for the specific DASS design contemplated by the petitioner, for all DASS designs incorporating the same technologies, or for all DASS designs.

§ 552.15 Processing of petition.

(a) NHTSA will process any petition that contains the information specified by this subpart. If a petition fails to provide any of the information, NHTSA will not process the petition but will advise the petitioner of the information that shall be provided if the agency is to process the petition. The agency will seek to notify the petitioner of any such deficiency within 30 days after receipt of the petition.

(b) At any time during the agency's consideration of a petition submitted under this Part, the Administrator may request the petitioner to provide additional supporting information and data and/or provide a demonstration of any of the requested test procedures. The agency will seek to make any such request within 60 days after receipt of the petition. Such demonstration may be at either an agency designated facility or one chosen by the petitioner, provided that, in either case, the facility shall be located in North America. If such a request is not honored to the satisfaction of the agency, the petition will not receive further consideration until the requested information is submitted.

(c) The agency will publish in the **Federal Register** either a Notice of Proposed Rulemaking proposing adoption of the requested test procedures, possibly with changes and/or additions, or a notice denying the petition. The agency will seek to issue either notice within 120 days after receipt of a complete petition. However, this time period may be extended by any time period during which the agency is awaiting additional information it requests from the petitioner or is awaiting a requested demonstration. The agency contemplates a 30 to 60 day comment period for any Notice of Proposed Rulemaking, and will endeavor to issue a final rule within 60 days thereafter.

PART 571—FEDERAL MOTOR VEHICLE SAFETY STANDARDS

4. The authority citation for Part 571 of Title 49 continues to read as follows:

Authority: 49 U.S.C. 322, 30111, 30115, 30117, and 30166; delegation of authority at 49 CFR 1.50.

5. Section 571.208 is amended as follows:

A. By revising S3, S4.5.1 heading, S4.5.1(b)(1), S4.5.1(b)(2), S4.5.1(e), S4.5.1(f), S4.5.4, S5, S5.1, S6.1, S6.2, 6.4, S8.1.5, S10.6.1.1, S13 and S13.1;

B. By removing S4.5.5;

C. By adding S4.1.5.4, S4.2.6.3, S4.7, S4.8, S4.9, S4.10, S4.11, S4.12, S4.13, S5.1.1, S5.1.2, S6.6, S6.7, S14 through S29.3(b);

D. By adding the heading ''Figures to § 571.208'' at the end of the section and moving figures 2 through 7 to follow this heading (figure 1 is reserved); and

E. By adding new figures 8, 9 and 10 in numerical order, and Appendix A after the figures, to read as follows:

§ 571.208 Standard No. 208; Occupant crash protection.

* * * * *

S3. *Application.*

(a) This standard applies to passenger cars, multipurpose passenger vehicles, trucks, and buses. In addition, S9, *Pressure vessels and explosive devices,* applies to vessels designed to contain a pressurized fluid or gas, and to explosive devices, for use in the above types of motor vehicles as part of a system designed to provide protection to occupants in the event of a crash.

(b) Notwithstanding any language to the contrary, any vehicle manufactured after March 19, 1997, and before September 1, 2006, that is subject to a dynamic crash test requirement conducted with unbelted dummies may meet the requirements specified in S5.1.2(a)(1), S5.1.2(a)(2), or S13 instead of the applicable unbelted requirement, unless the vehicle is certified to meet the requirements specified in S14.5, S15, S17, S19, S21, S23, and S25.

(c) For vehicles which are certified to meet the requirements specified in S13 instead of the otherwise applicable dynamic crash test requirement conducted with unbelted dummies, compliance with S13 shall, for purposes of Standards No. 201, 203 and 209, be deemed as compliance with the unbelted frontal barrier requirements of S5.1.2.

* * * * *

S4.1.5.4 *Passenger cars certified to S14.* Each passenger car certified to S14 shall, at each front outboard designated seating position, meet the applicable frontal crash protection requirements of S5.1.2(b) by means of an inflatable restraint system that requires no action by vehicle occupants.

* * * * *

S4.2.6.3 *Trucks, buses, and multipurpose passenger vehicles certified to S14.* Each truck, bus, or multipurpose passenger vehicle with a GVWR of 3,855 kg (8,500 lb) or less and an unloaded vehicle weight of 2,495 kg (5,500 lb) or less certified to S14 shall, at each front outboard designated seating position, meet the applicable frontal crash protection requirements of S5.1.2(b) by means of an inflatable restraint system that requires no action by vehicle occupants.

* * * * *

S4.5.1 *Labeling and owner's manual information.*

* * * * *

(b) * * *

(1) Except as provided in S4.5.1(b)(2), each vehicle shall have a label permanently affixed to either side of the sun visor, at the manufacturer's option, at each front outboard seating position that is equipped with an inflatable restraint. The label shall conform in content to the label shown in either Figure 6a or 6b of this standard, as appropriate, and shall comply with the requirements of S4.5.1(b)(1)(i) through S4.5.1(b)(1)(iv).

(i) The heading area shall be yellow with the word ''WARNING'' and the alert symbol in black.

(ii) The message area shall be white with black text. The message area shall be no less than 30 cm^2 (4.7 in^2).

(iii) The pictogram shall be black with a red circle and slash on a white background. The pictogram shall be no less than 30 mm (1.2 in) in diameter.

(iv) If the vehicle does not have a back seat, the label shown in Figure 6a or 6b may be modified by omitting the statement: ''The BACK SEAT is the SAFEST place for children.''

(2) Vehicles certified to meet the requirements specified in S19, S21, and S23, shall have a label permanently affixed to either side of the sun visor, at the manufacturer's option, at each front outboard seating position that is equipped with an inflatable restraint. The label shall conform in content to the label shown in Figure 8 of this standard and shall comply with the requirements of S4.5.1(b)(2)(i) through S4.5.1(b)(2)(iv).

(i) The heading area shall be yellow with the word ''WARNING'' and the alert symbol in black.

(ii) The message area shall be white with black text. The message area shall be no less than 30 cm^2 (4.7 in^2).

(iii) The pictogram shall be black on a white background. The pictogram shall be no less than 30 mm (1.2 in) in length.

(iv) If the vehicle does not have a back seat, the label shown in Figure 8 may be modified by omitting the statement: ''The BACK SEAT is the SAFEST place for CHILDREN.''

* * * * *

(e) *Label on the dashboard.*

(1) Except as provided in S4.5.1(e)(2), each vehicle that is equipped with an inflatable restraint for the passenger position shall have a label attached to a location on the dashboard or the steering wheel hub that is clearly visible from all front seating positions. The label need not be permanently affixed to the vehicle. This label shall conform in content to the label shown in Figure 7 of this standard, and shall comply with the requirements of S4.5.1(e)(1)(i) through S4.5.1(e)(1)(iii).

(i) The heading area shall be yellow with the word ''WARNING'' and the alert symbol in black.

(ii) The message area shall be white with black text. The message area shall be no less than 30 cm^2 (4.7 in^2).

(iii) If the vehicle does not have a back seat, the label shown in Figure 7 may be modified by omitting the statement: ''The back seat is the safest place for children 12 and under.''

(2) Vehicles certified to meet the requirements specified in S19, S21, and S23, that are equipped with an inflatable restraint for the passenger position shall have a label attached to a location on the dashboard or the steering wheel hub that is clearly visible from all front seating positions. The label need not be permanently affixed to the vehicle. This label shall conform in content to the label shown in Figure 9 of this standard, and shall comply with the requirements of S4.5.1(e)(2)(i) through S4.5.1(e)(2)(iii).

(i) The heading area shall be yellow with black text.

(ii) The message area shall be white with black text. The message area shall be no less than 30 cm^2 (4.7 in^2).

(iii) If the vehicle does not have a back seat, the label shown in Figure 9 may be modified by omitting the statement: ''The back seat is the safest place for children.''

(f) *Information to appear in owner's manual.*

(1) The owner's manual for any vehicle equipped with an inflatable restraint system shall include an accurate description of the vehicle's air bag system in an easily understandable format. The owner's manual shall include a statement to the effect that the vehicle is equipped with an air bag and lap/shoulder belt at both front outboard seating positions, and that the air bag is a supplemental restraint at those seating positions. The information shall emphasize that all occupants, including the driver, should always wear their seat belts whether or not an air bag is also provided at their seating position to minimize the risk of severe injury or death in the event of a crash. The owner's manual shall also provide any necessary precautions regarding the proper positioning of occupants, including children, at seating positions equipped with air bags to ensure maximum safety protection for those occupants. The owner's manual shall also explain that no objects should be placed over or near the air bag on the instrument panel, because any such objects could cause harm if the vehicle is in a crash severe enough to cause the air bag to inflate.

(2) For any vehicle certified to meet the requirements specified in S14.5, S15, S17, S19, S21, S23, and S25, the manufacturer shall also include in the vehicle's owner's manual a discussion of the advanced passenger air bag system installed in the vehicle. The discussion shall explain the proper functioning of the advanced air bag system and shall provide a summary of the actions that may affect the proper functioning of the system. The discussion shall include, at a minimum, accurate information on the following topics:

(i) a presentation and explanation of the main components of the advanced passenger air bag system.

(ii) an explanation of how the components function together as part of the advanced passenger air bag system.

(iii) the basic requirements for proper operation, including an explanation of the actions that may affect the proper functioning of the system.

(iv) a complete description of the passenger air bag suppression system installed in the vehicle, including a discussion of any suppression zone.

(v) an explanation of the interaction of the advanced passenger air bag system with other vehicle components, such as seat belts, seats or other components.

(vi) a summary of the expected outcomes when child restraint systems, children and small teenagers or adults are both properly and improperly positioned in the passenger seat, including cautionary advice against improper placement of child restraint systems.

(vii) a discussion of the telltale light, specifying its location in the vehicle and explaining when the light is illuminated.

(viii) information on how to contact the vehicle manufacturer concerning modifications for persons with disabilities that may affect the advanced air bag system.

* * * * *

S4.5.4 *Passenger air bag manual cut-off device.* Passenger cars, trucks, buses, and multipurpose passenger vehicles manufactured before September 1, 2012 may be equipped with a device that deactivates the air bag installed at the right front outboard seating position in the vehicle, if all the conditions in S4.5.4.1 through S4.5.4.4 are satisfied.

* * * * *

S4.7 *Incorporation by reference.* Society of Automotive Engineers (SAE) Recommended Practice J211/1 rev. Mar 95, ''Instrumentation for Impact Test—Part 1—Electronic Instrumentation,'' (SAE J211/1 rev. Mar 95) is incorporated by reference in sections S4.13, S6.6, S13.1, S15.3.6, S19.4.4, S21.5.5, S23.5.5, and S25.4, Department of Defense MIL–S–13192P, 1988, ''Military Specification, Shoes, Men's, Dress, Oxford'', Amendment 1, October 14, 1994 (MIL–S–13192P) is incorporated by reference in section S8.1.8, and Department of Defense MIL–S–21711E, 1982, ''Military Specification, Shoes, Women's'', Amendment 2, October 14, 1994 (MIL–S–21711E) is incorporated by reference in section S16.2.5, and are thereby made part of this standard. The Director of the Federal Register approved the material incorporated by reference in accordance with 5 U.S.C. 552 (a) and 1 CFR Part 51. A copy of SAE J211/1 rev. Mar 95 may be obtained from SAE at the Society of Automotive Engineers, Inc., 400 Commonwealth Drive, Warrendale, PA 15096. A copy of

SAE J211/1 rev. Mar 95 and copies of MIL–S–13192P and MIL–S–21711E may be inspected at NHTSA's technical reference library, 400 Seventh Street, S.W., Room 5109, Washington, DC, or at the Office of the Federal Register, 800 North Capitol Street, N.W., Suite 700, Washington, DC.

S4.8 *Selection of compliance options.* Where manufacturer options are specified, the manufacturer shall select the option by the time it certifies the vehicle and may not thereafter select a different option for the vehicle. Each manufacturer shall, upon request from the National Highway Traffic Safety Administration, provide information regarding which of the compliance options it has selected for a particular vehicle or make/model.

S4.9 *Values and tolerances.* Wherever a range of values or tolerances are specified, requirements shall be met at all values within the range of values or tolerances. With respect to the positioning of anthropomorphic dummies, torso and spine angle tolerances shall be ± 2 degrees unless otherwise stated, and leg, thigh, foot, and arm angle tolerances shall be ± 5 degrees unless otherwise stated.

S4.10 *Metric values.* Specifications and requirements are given in metric units with English units provided for reference. The metric values are controlling.

S4.11 *Test duration for purpose of measuring injury criteria.*

(a) For all barrier crashes, the injury criteria specified in this standard shall be met when calculated based on data recorded for 300 milliseconds after the vehicle strikes the barrier. For low risk deployment tests, the injury criteria shall be met when calculated based on data recorded for 300 milliseconds after the air bag is signaled to deploy.

(b) The requirements for dummy containment shall continue until both the vehicle and the dummies have ceased moving.

S4.12 *Suppression systems that do not detect dummies.* For vehicles with occupant sensing systems that recognize humans and not dummies, such that the air bag or bags would not function in crash tests, the manufacturer shall provide NHTSA with information and equipment necessary to circumvent the suppression system for the crash test such that the restraint system operates as if 5th percentile adult female humans and 50th percentile adult male humans are seated in the vehicle.

S4.13 *Data channels.* All data channels used in injury criteria calculations shall be filtered using a phaseless digital filter, such as the Butterworth four-pole phaseless digital filter specified in Appendix C of SAE J211/1, rev. Mar 95, incorporated by reference in S4.7.

* * * * *

S5 *Occupant crash protection requirements for the 50th percentile adult male dummy.*

S5.1 *Frontal barrier crash test.*

S5.1.1 *Belted test.*

(a) *Vehicles not certified to S14.* Impact a vehicle traveling longitudinally forward at any speed, up to and including 48 km/h (30 mph), into a fixed rigid barrier that is perpendicular to the line of travel of the vehicle, and at any angle up to 30 degrees in either direction from the perpendicular to the line of travel of the vehicle, under the applicable conditions of S8 and S10. The test dummy specified in S8.1.8 placed in each front outboard designated seating position shall meet the injury criteria of S6.1, S6.2(a), S6.3, S6.4(a), and S6.5 of this standard.

(b) *Vehicles certified to S14.*

(1) *Vehicles certified to S14.1 or S14.2.* Impact a vehicle traveling longitudinally forward at any speed, up to and including 48 km/h (30 mph), into a fixed rigid barrier that is perpendicular to the line of travel of the vehicle under the applicable conditions of S8 and S10. The test dummy specified in S8.1.8 placed in each front outboard designated seating position shall meet the injury criteria of S6.1, S6.2(b), S6.3, S6.4(b), S6.5, and S6.6 of this standard.

(2) *Vehicles certified to S14.3 or S14.4.* Impact a vehicle traveling longitudinally forward at any speed, up to and including 56 km/h (35 mph), into a fixed rigid barrier that is perpendicular to the line of travel of the vehicle under the applicable conditions of S8 and S10. The test dummy specified in S8.1.8 placed in each front outboard designated seating position shall meet the injury criteria of S6.1, S6.2(b), S6.3, S6.4(b), S6.5, and S6.6 of this standard.

S5.1.2 *Unbelted test.*

(a) *Vehicles not certified to the requirements of S13 or S14.* At the manufacturer's option, either one of the following unbelted tests shall be met:

(1) Impact a vehicle traveling longitudinally forward at any speed up to and including 48 km/h (30 mph), into a fixed rigid barrier that is perpendicular to the line of travel of the vehicle, and at any angle up to 30 degrees in either direction from the perpendicular to the line of travel of the vehicle, under the applicable conditions of S8 and S10, excluding S10.7, S10.8, and S10.9. The test dummy specified in S8.1.8 placed in each front outboard designated seating position shall meet the injury criteria of S6.1, S6.2(a), S6.3, S6.4(a), and S6.5 of this standard.

(2) Impact a vehicle traveling longitudinally forward at any speed between 32 km/h (20 mph) and 40 km/h (25 mph), inclusive, into a fixed rigid barrier that is perpendicular to the line of travel of the vehicle, and at any angle up to 30 degrees in either direction from the perpendicular to the line of travel of the vehicle, under the applicable conditions of S8 and S10, excluding S10.7, S10.8, and S10.9. The test dummy specified in S8.1.8 placed in each front outboard designated seating position shall meet the injury criteria of S6.1, S6.2(b), S6.3, S6.4(b), S6.5, and S6.6 of this standard.

(b) *Vehicles certified to the requirements of S14.* Impact a vehicle traveling longitudinally forward at any speed between 32 km/h (20 mph) and 40 km/h (25 mph), inclusive, into a fixed rigid barrier that is perpendicular to the line of travel of the vehicle, and at any angle up to 30 degrees in either direction from the perpendicular to the line of travel of the vehicle, under the applicable conditions of S8 and S10, excluding S10.7, S10.8, and S10.9. The test dummy specified in S8.1.8 placed in each front outboard designated seating position shall meet the injury criteria of S6.1, S6.2(b), S6.3, S6.4(b), S6.5, and S6.6 of this standard.

* * * * *

S6.1 All portions of the test dummy shall be contained within the outer surfaces of the vehicle passenger compartment.

S6.2 *Head injury criteria.*

(a)(1) For any two points in time, t_1 and t_2, during the event which are separated by not more than a 36 millisecond time interval and where t_1 is less than t_2, the head injury criterion (HIC_{36}) shall be determined using the resultant head acceleration at the center of gravity of the dummy head, a_r, expressed as a multiple of g (the acceleration of gravity) and shall be calculated using the expression:

$$\left[\frac{1}{(t_2 - t_1)}\int_{t_1}^{t_2} a_r dt\right]^{2.5}(t_2 - t_1)$$

(2) The maximum calculated HIC_{36} value shall not exceed 1,000.

(b)(1) For any two points in time, t_1 and t_2, during the event which are separated by not more than a 15 millisecond time interval and where t_1 is less than t_2, the head injury criterion (HIC_{15}) shall be determined using the resultant head acceleration at the center of gravity of the dummy head, a_r,

expressed as a multiple of g (the acceleration of gravity) and shall be calculated using the expression:

$$\left[\frac{1}{(t_2 - t_1)}\int_{t_1}^{t_2} a_r dt\right]^{2.5}(t_2 - t_1)$$

(2) The maximum calculated HIC_{15} value shall not exceed 700.

* * * * *

S6.4 *Chest deflection.*

(a) Compressive deflection of the sternum relative to the spine shall not exceed 76 mm (3.0 in).

(b) Compressive deflection of the sternum relative to the spine shall not exceed 63 mm (2.5 in).

* * * * *

S6.6 *Neck injury.* When measuring neck injury, each of the following injury criteria shall be met.

(a) *Nij.*

(1) The shear force (Fx), axial force (Fz), and bending moment (My) shall be measured by the dummy upper neck load cell for the duration of the crash event as specified in S4.10. Shear force, axial force, and bending moment shall be filtered for Nij purposes at SAE J211/1 rev. Mar 95 Channel Frequency Class 600 (see S4.7).

(2) During the event, the axial force (Fz) can be either in tension or compression while the occipital condyle bending moment (Mocy) can be in either flexion or extension. This results in four possible loading conditions for Nij: tension-extension (Nte), tension-flexion (Ntf), compression-extension (Nce), or compression-flexion (Ncf).

(3) When calculating Nij using the equation in S6.6(a)(4), the critical values, Fzc and Myc, are:

(i) Fzc=6806 N (1530 lbf) when Fz is in tension

(ii) Fzc=6160 N (1385 lbf) when Fz is in compression

(iii) Myc=310 Nm (229 lbf-ft) when a flexion moment exists at the occipital condyle

(iv) Myc=135 Nm (100 lbf-ft) when an extension moment exists at the occipital condyle.

(4) At each point in time, only one of the four loading conditions occurs and the Nij value corresponding to that loading condition is computed and the three remaining loading modes shall be considered a value of zero. The expression for calculating each Nij loading condition is given by:

Nij=(Fz/Fzc)+(Mocy/Myc)

(5) None of the four Nij values shall exceed 1.0 at any time during the event.

(b) *Peak tension.* Tension force (Fz), measured at the upper neck load cell, shall not exceed 4170 N (937 lbf) at any time.

(c) *Peak compression.* Compression force (Fz), measured at the upper neck load cell, shall not exceed 4000 N (899 lbf) at any time.

S6.7 Unless otherwise indicated, instrumentation for data acquisition, data channel frequency class, and moment calculations are the same as given for the 49 CFR Part 572, Subpart E Hybrid III test dummy.

* * * * *

S8.1.5 Movable vehicle windows and vents are placed in the fully closed position, unless the vehicle manufacturer chooses to specify a different adjustment position prior to the time it certifies the vehicle.

* * * * *

S10.6.1.1 If the vehicle has an adjustable accelerator pedal, adjust it to the full forward position. Rest the right foot of the test dummy on the undepressed accelerator pedal with the rearmost point of the heel on the floor pan in the plane of the pedal. If the foot cannot be placed on the accelerator pedal, set it initially perpendicular to the lower leg and then place it as far forward as possible in the direction of the pedal centerline with the rearmost point of the heel resting on the floor pan. If the vehicle has an adjustable accelerator pedal and the right foot is not touching the accelerator pedal when positioned as above, move the pedal rearward until it touches the right foot. If the accelerator pedal still does not touch the foot in the full rearward position, leave the pedal in that position.

S13 *Alternative unbelted test available, under S3(b) of this standard, for certain vehicles manufactured before September 1, 2006.*

S13.1 *Instrumentation for Impact Test—Part 1—Electronic Instrumentation.* Under the applicable conditions of S8, mount the vehicle on a dynamic test platform at the vehicle attitude set forth in S13.3, so that the longitudinal center line of the vehicle is parallel to the direction of the test platform travel and so that movement between the base of the vehicle and the test platform is prevented. The test platform is instrumented with an accelerometer and data processing system having a frequency response of 60 channel class as specified in SAE J211/1 rev. Mar 95 (see S4.7). The accelerometer sensitive axis is parallel to the direction of test platform travel. The test is conducted at a velocity change approximating 48 km/h (30 mph) with acceleration of the test platform such that all points on the crash pulse curve within the corridor identified in Figure 6 are covered. An inflatable restraint is to be activated at 20 ms +/−2 ms from the time that 0.5 g is measured on the dynamic test platform. The test dummy specified in S8.1.8, placed in each front outboard designated seating position as specified in S10, excluding S10.7, S10.8, and S10.9, shall meet the injury criteria of S6.1, S6.2(a), S6.3, S6.4(a), S6.5, and S13.2 of this standard.

* * * * *

S14 *Advanced air bag requirements for passenger cars and for trucks, buses, and multipurpose passenger vehicles with a GVWR of 3,855 kg (8500 pounds) or less and an unloaded vehicle weight of 2,495 kg (5500 pounds) or less, except for walk-in van-type trucks or vehicles designed to be sold exclusively to the U.S. Postal Service.*

S14.1 *Vehicles manufactured on or after September 1, 2003, and before September 1, 2006.*

(a) For vehicles manufactured for sale in the United States on or after September 1, 2003, and before September 1, 2006, a percentage of the manufacturer's production, as specified in S14.1.1, shall meet the requirements specified in S14.5.1(a), S14.5.2, S15.1, S15.2, S17, S19, S21, S23, and S25 (in addition to the other requirements specified in this standard).

(b) Manufacturers that sell two or fewer carlines, as that term is defined at 49 CFR 583.4, in the United States may, at the option of the manufacturer, meet the requirements of this paragraph instead of paragraph (a) of this section. Each vehicle manufactured on or after September 1, 2004, and before September 1, 2006, shall meet the requirements specified in S14.5.1(a), S14.5.2, S15.1, S15.2, S17, S19, S21, S23, and S25 (in addition to the other requirements specified in this standard).

(c) Vehicles that are manufactured in two or more stages or that are altered (within the meaning of 49 CFR 567.7) after having previously been certified in accordance with Part 567 of this chapter are not subject to the requirements of S14.1.

(d) Vehicles that are manufactured by a manufacturer that produces fewer than 5,000 vehicles worldwide annually are not subject to the requirements of S14.1.

S14.1.1 *Phase-in schedule.*

S14.1.1.1 *Vehicles manufactured on or after September 1, 2003, and before September 1, 2004.* Subject to S14.1.2(a), for vehicles manufactured by a manufacturer on or after September 1, 2003, and before September 1, 2004, the amount of vehicles complying with S14.5.1(a), S14.5.2, S15.1, S15.2, S17, S19, S21, S23, and S25, shall be not less than 35 percent of:

(a) If the manufacturer has manufactured vehicles for sale in the United States during both of the two production years prior to September 1, 2003, the manufacturer's average annual production of vehicles manufactured on or after September 1, 2001, and before September 1, 2004, or

(b) The manufacturer's production on or after September 1, 2003, and before September 1, 2004.

S14.1.1.2 *Vehicles manufactured on or after September 1, 2004, and before September 1, 2005.* Subject to S14.1.2(b), for vehicles manufactured by a manufacturer on or after September 1, 2004, and before September 1, 2005, the amount of vehicles complying with S14.5.1(a), S14.5.2, S15.1, S15.2, S17, S19, S21, S23, and S25 shall be not less than 65 percent of:

(a) If the manufacturer has manufactured vehicles for sale in the United States during both of the two production years prior to September 1, 2004, the manufacturer's average annual production of vehicles manufactured on or after September 1, 2002, and before September 1, 2005, or

(b) The manufacturer's production on or after September 1, 2004, and before September 1, 2005.

S14.1.1.3 *Vehicles manufactured on or after September 1, 2005, and before September 1, 2006.* Subject to S14.1.2(c), for vehicles manufactured by a manufacturer on or after September 1, 2005, and before September 1, 2006, the amount of vehicles complying with S14.5.1(a), S14.5.2, S15.1, S15.2, S17, S19, S21, S23, and S25 shall be 100 percent of the manufacturer's production during that period.

S14.1.2 Calculation of complying vehicles.

(a) For the purposes of complying with S14.1.1.1, a manufacturer may count a vehicle if it is manufactured on or after June 12, 2000, but before September 1, 2004.

(b) For purposes of complying with S14.1.1.2, a manufacturer may count a vehicle if it:

(1) Is manufactured on or after June 12, 2000, but before September 1, 2005, and

(2) Is not counted toward compliance with S14.1.1.1.

(c) For purposes of complying with S14.1.1.3, a manufacturer may count a vehicle if it:

(1) Is manufactured on or after June 12, 2000, but before September 1, 2006, and (2) Is not counted toward compliance with S14.1.1.1 or S14.1.1.2.

S14.1.3 *Vehicles produced by more than one manufacturer.*

S14.1.3.1 For the purpose of calculating average annual production of vehicles for each manufacturer and the number of vehicles manufactured by each manufacturer under S14.1.1, a vehicle produced by more than one manufacturer shall be attributed to a single manufacturer as follows, subject to S14.1.3.2.

(a) A vehicle that is imported shall be attributed to the importer.

(b) A vehicle manufactured in the United States by more than one manufacturer, one of which also markets the vehicle, shall be attributed to the manufacturer that markets the vehicle.

S14.1.3.2 A vehicle produced by more than one manufacturer shall be attributed to any one of the vehicle's manufacturers specified by an express written contract, reported to the National Highway Traffic Safety Administration under 49 CFR Part 585, between the manufacturer so specified and the manufacturer to which the vehicle would otherwise be attributed under S14.1.3.1.

S14.2 *Vehicles manufactured on or after September 1, 2006.* Each vehicle shall meet the requirements specified in S14.5.1(a), S14.5.2, S15.1, S15.2, S17, S19, S21, S23, and S25 (in addition to the other requirements specified in this standard).

S14.3 *Vehicles manufactured on or after September 1, 2007, and before September 1, 2010.*

(a) For vehicles manufactured for sale in the United States on or after September 1, 2007, and before September 1, 2010, a percentage of the manufacturer's production, as specified in S14.3.1, shall meet the requirements specified in S14.5.1(b), S14.5.2, S15.1, S15.2, S17, S19, S21, S23, and S25 (in addition to the other requirements specified in this standard).

(b) Manufacturers that sell two or fewer carlines, as that term is defined at 49 CFR 583.4, in the United States may, at the option of the manufacturer, meet the requirements of this paragraph instead of paragraph (a) of this section. Each vehicle manufactured on or after September 1, 2007, and before September 1, 2010, shall meet the requirements specified in S14.5.1(b), S14.5.2, S15.1, S15.2, S17, S19, S21, S23, and S25 (in addition to the other requirements specified in this standard).

(c) Vehicles that are manufactured in two or more stages or that are altered (within the meaning of 49 CFR 567.7) after having previously been certified in accordance with Part 567 of this chapter are not subject to the requirements of S14.3.

(d) Vehicles that are manufactured by a manufacturer that produces fewer than 5,000 vehicles worldwide annually are not subject to the requirements of S14.3.

S14.3.1 *Phase-in schedule.*

S14.3.1.1 *Vehicles manufactured on or after September 1, 2007, and before September 1, 2008.* Subject to S14.3.2(a), for vehicles manufactured by a manufacturer on or after September 1, 2007, and before September 1, 2008, the amount of vehicles complying with S14.5.1(b), S14.5.2, S15.1, S15.2, S17, S19, S21, S23, and S25, shall be not less than 35 percent of:

(a) If the manufacturer has manufactured vehicles for sale in the United States during both of the two production years prior to September 1, 2007, the manufacturer's average annual production of vehicles manufactured on or after September 1, 2005, and before September 1, 2008, or

(b) The manufacturer's production on or after September 1, 2007, and before September 1, 2008.

S14.3.1.2 *Vehicles manufactured on or after September 1, 2008, and before September 1, 2009.* Subject to S14.3.2(b), for vehicles manufactured by a manufacturer on or after September 1, 2008, and before September 1, 2009, the amount of vehicles complying with S14.5.1(b), S14.5.2, S15.1, S15.2, S17, S19, S21, S23, and S25 shall be not less than 65 percent of:

(a) If the manufacturer has manufactured vehicles for sale in the United States during both of the two production years prior to September 1, 2008, the manufacturer's average annual production of vehicles manufactured on or after September 1, 2006 and before September 1, 2009, or

(b) The manufacturer's production on or after September 1, 2008, and before September 1, 2009.

S14.3.1.3 *Vehicles manufactured on or after September 1, 2009, and before September 1, 2010.* Subject to S14.3.2(c), for vehicles manufactured by a manufacturer on or after September 1, 2009, and before September 1, 2010, the amount of vehicles complying with S14.5.1(b), S14.5.2, S15.1, S15.2, S17, S19, S21, S23, and S25 shall be 100 percent of the manufacturer's production during that period.

S14.3.2 *Calculation of complying vehicles.*

(a) For the purposes of complying with S14.3.1.1, a manufacturer may count a vehicle if it is manufactured on or after September 1, 2006, but before September 1, 2008.

(b) For purposes of complying with S14.3.1.2, a manufacturer may count a vehicle if it:

(1) Is manufactured on or after September 1, 2006, but before September 1, 2009, and

(2) Is not counted toward compliance with S14.3.1.1.

(c) For purposes of complying with S14.3.1.3, a manufacturer may count a vehicle if it:

(1) Is manufactured on or after September 1, 2006, but before September 1, 2010, and

(2) Is not counted toward compliance with S14.3.1.1 or S14.3.1.2.

S14.3.3 *Vehicles produced by more than one manufacturer.*

S14.3.3.1 For the purpose of calculating average annual production of vehicles for each manufacturer and the number of vehicles manufactured by each manufacturer under S14.3.1, a vehicle produced by more than one manufacturer shall be attributed to a single manufacturer as follows, subject to S14.3.3.2.

(a) A vehicle that is imported shall be attributed to the importer.

(b) A vehicle manufactured in the United States by more than one manufacturer, one of which also markets the vehicle, shall be attributed to the manufacturer that markets the vehicle.

S14.3.3.2 A vehicle produced by more than one manufacturer shall be attributed to any one of the vehicle's manufacturers specified by an express written contract, reported to the National Highway Traffic Safety Administration under 49 CFR Part 585, between the manufacturer so specified and the manufacturer to which the vehicle would otherwise be attributed under S14.3.3.1.

S14.4 *Vehicles manufactured on or after September 1, 2010.* Each vehicle shall meet the requirements specified in S14.5.1(b), S14.5.2, S15.1, S15.2, S17, S19, S21, S23, and S25 (in addition to the other requirements specified in this standard).

S14.5 *Barrier test requirements using 50th percentile adult male dummies.*

S14.5.1 *Rigid barrier belted test.*

(a) Each vehicle that is certified as complying with S14.1 or S14.2 shall, at each front outboard designated seating position, meet the injury criteria specified in S6.1, S6.2(b), S6.3, S6.4(b), S6.5, and S6.6 when tested under S5.1.1(b)(1).

(b) Each vehicle that is certified as complying with S14.3 or S14.4 shall, at each front outboard designated seating position, meet the injury criteria specified in S6.1, S6.2(b), S6.3, S6.4(b), S6.5, and S6.6 when tested under S5.1.1(b)(2).

S14.5.2 *Rigid barrier unbelted test.* Each vehicle that is certified as complying with S14 shall, at each front outboard designated seating position, meet the injury criteria specified in S6.1, S6.2(b), S6.3, S6.4(b), S6.5, and S6.6 when tested under S5.1.2(b).

S15 *Rigid barrier test requirements using 5th percentile adult female dummies.*

S15.1 *Belted test.* Each vehicle that is certified as complying with S14 shall, at each front outboard designated seating position, meet the injury criteria specified in S15.3 of this standard when the vehicle is crash tested in accordance with the procedures specified in S16.1(a) of this standard with the anthropomorphic test devices restrained by a Type 2 seat belt assembly.

S15.2 *Unbelted test.* Each vehicle that is certified as complying with S14 shall, at each front outboard designated seating position, meet the injury criteria specified in S15.3 of this standard when the vehicle is crash tested in accordance with the procedures specified in S16.1(b) of this standard with the anthropomorphic test devices unbelted.

S15.3 *Injury criteria for the 49 CFR Part 572, Subpart O Hybrid III 5th percentile female test dummy.*

S15.3.1 All portions of the test dummy shall be contained within the outer surfaces of the vehicle passenger compartment.

S15.3.2 *Head injury criteria.*

(a) For any two points in time, t_1 and t_2, during the event which are separated by not more than a 15 millisecond time interval and where t_1 is less than t_2, the head injury criterion (HIC_{15}) shall be determined using the resultant head acceleration at the center of gravity of the dummy head, a_r, expressed as a multiple of g (the acceleration of gravity) and shall be calculated using the expression:

(b) The maximum calculated HIC_{15} value shall not exceed 700.

S15.3.3 The resultant acceleration calculated from the output of the thoracic instrumentation shall not exceed 60 g's, except for intervals whose cumulative duration is not more than 3 milliseconds.

S15.3.4 Compression deflection of the sternum relative to the spine, as determined by instrumentation, shown shall not exceed 52 mm (2.0 in).

S15.3.5 The force transmitted axially through each femur shall not exceed 6805 N (1530 lb).

S15.3.6 *Neck injury.* When measuring neck injury, each of the following injury criteria shall be met.

(a) *Nij.*

(1) The shear force (Fx), axial force (Fz), and bending moment (My) shall be measured by the dummy upper neck load cell for the duration of the crash event as specified in S4.10. Shear force, axial force, and bending moment shall be filtered for Nij purposes at SAE J211/1 rev. Mar95 Channel Frequency Class 600 (see S4.7).

(2) During the event, the axial force (Fz) can be either in tension or compression while the occipital condyle bending moment (Mocy) can be in either flexion or extension. This results in four possible loading conditions for Nij: tension-extension (Nte), tension-flexion (Ntf), compression-extension (Nce), or compression-flexion (Ncf).

(3) When calculating Nij using equation S15.3.6(a)(4), the critical values, Fzc and Myc, are:

(i) Fzc = 4287 N (964 lbf) when Fz is in tension

(ii) Fzc = 3880 N (872 lbf) when Fz is in compression

(iii) Myc = 155 Nm (114 lbf-ft) when a flexion moment exists at the occipital condyle

(iv) Myc = 67 Nm (49 lbf-ft) when an extension moment exists at the occipital condyle.

(4) At each point in time, only one of the four loading conditions occurs and the Nij value corresponding to that loading condition is computed and the three remaining loading modes shall be considered a value of zero. The expression for calculating each Nij loading condition is given by:

Nij = (Fz / Fzc) + (Mocy / Myc)

(5) None of the four Nij values shall exceed 1.0 at any time during the event.

(b) *Peak tension.* Tension force (Fz), measured at the upper neck load cell, shall not exceed 2620 N (589 lbf) at any time.

(c) *Peak compression.* Compression force (Fz), measured at the upper neck load cell, shall not exceed 2520 N (566 lbf) at any time.

S15.3.7 Unless otherwise indicated, instrumentation for data acquisition, data channel frequency class, and moment calculations are the same as given for the 49 CFR Part 572, Subpart O Hybrid III 5th percentile female test dummy.

S16. *Test procedures for rigid barrier test requirements using 5th percentile adult female dummies.*

S16.1 *General provisions.* Crash testing to determine compliance with the requirements of S15 of this standard is conducted as specified in the following paragraphs (a) and (b).

(a) *Belted test.* Place a 49 CFR Part 572 Subpart O 5th percentile adult female test dummy at each front outboard seating position of a vehicle, in accordance with the procedures specified in S16.3 of this standard. Impact the vehicle traveling longitudinally forward at any speed, up

to and including 48 km/h (30 mph), into a fixed rigid barrier that is perpendicular within a tolerance of ± 5 degrees to the line of travel of the vehicle under the applicable conditions of S16.2 of this standard.

(b) *Unbelted test.* Place a 49 CFR Part 572 Subpart O 5th percentile adult female test dummy at each front outboard seating position of a vehicle, in accordance with the procedures specified in S16.3 of this standard, except S16.3.5. Impact the vehicle traveling longitudinally forward at any speed, from 32 km/h (20 mph) to 40 km/h (25 mph), inclusive, into a fixed rigid barrier that is perpendicular within a tolerance of ± 5 degrees to the line of travel of the vehicle under the applicable conditions of S16.2 of this standard.

S16.2 *Test conditions.*

S16.2.1 The vehicle, including test devices and instrumentation, is loaded as in S8.1.1.

S16.2.2 Movable vehicle windows and vents are placed in the fully closed position, unless the vehicle manufacturer chooses to specify a different adjustment position prior to the time the vehicle is certified.

S16.2.3 Convertibles and open-body type vehicles have the top, if any, in place in the closed passenger compartment configuration.

S16.2.4 Doors are fully closed and latched but not locked.

S16.2.5 The dummy is clothed in form fitting cotton stretch garments with short sleeves and above the knee length pants. A size 7 1/2W shoe which meets the configuration and size specifications of MIL–S–21711E (see S4.7) or its equivalent is placed on each foot of the test dummy.

S16.2.6 Limb joints are set at one g, barely restraining the weight of the limb when extended horizontally. Leg joints are adjusted with the torso in the supine position.

S16.2.7 Instrumentation shall not affect the motion of dummies during impact.

S16.2.8 The stabilized temperature of the dummy is at any level between 20.6° C and 22.2° C (69° F to 72° F).

S16.2.9 *Steering wheel adjustment.*

S16.2.9.1 Adjust a tiltable steering wheel, if possible, so that the steering wheel hub is at the geometric center of its full range of driving positions.

S16.2.9.2 If there is no setting detent at the mid position, lower the steering wheel to the detent just below the mid position.

S16.2.9.3 If the steering column is telescoping, place the steering column in the mid position. If there is no mid position, move the steering wheel rearward one position from the mid position.

S16.2.10 *Driver and passenger seat set-up.*

S16.2.10.1 *Seat position adjustment.*

S16.2.10.1.1 If a seat is adjustable in the fore and aft and/or vertical directions, move the seat to the fowardmost seating position and mid-height position.

S16.2.10.1.2 Establish a reference line on the outboard side of the seat cushion in a horizontal plane.

S16.2.10.1.3 Measure and record the seat cushion angle with respect to the reference line established in S16.2.10.1.2.

S16.2.10.1.4 Adjust the seat vertically as close to the mid-height position as possible. If possible, maintain the seat cushion reference angle measured in the middle and full forward condition in S16.2.10.1.3.

S16.2.10.2 *Lumbar support adjustment.* Position adjustable lumbar supports so that the lumbar support is in its lowest, retracted or deflated adjustment position.

S16.2.10.3 *Cushion and side bolster adjustment.* Position adjustable seat cushion and seat back side bolsters so that they are in the lowest or most open adjustment position.

S16.3 *Dummy seating positioning procedures.* The 49 CFR Part 572 Subpart O 5th percentile adult female test dummy is positioned as follows.

S16.3.1 *General provisions and definitions.*

S16.3.1.1 All angles are measured with respect to the horizontal plane.

S16.3.1.2 The dummy's neck bracket is adjusted to align the zero degree index marks.

S16.3.1.3 The term ''midsagittal plane'' refers to the vertical plane that separates the dummy into equal left and right halves.

S16.3.1.4 The term ''vertical longitudinal plane'' refers to a vertical plane parallel to the vehicle's longitudinal centerline.

S16.3.1.5 The term ''vertical plane'' refers to a vertical plane, not necessarily parallel to the vehicle's longitudinal centerline.

S16.3.1.6 The term ''transverse instrumentation platform'' refers to the transverse instrumentation surface inside the dummy's skull casting to which the neck load cell mounts. This surface is perpendicular to the skull cap's machined inferior-superior mounting surface.

S16.3.1.7. The term ''thigh'' refers to the femur between, but not including, the knee and the pelvis.

S16.3.1.8 The term ''leg'' refers to the lower part of the entire leg including the knee.

S16.3.1.9 The term ''foot'' refers to the foot including the ankle.

S16.3.2 *Driver dummy positioning.*

S16.3.2.1 *Driver torso/head/seat back angle positioning.*

S16.3.2.1.1 Fully recline the seat back, if adjustable.

S16.3.2.1.2 Install the dummy into the driver's seat. If necessary, move the seat rearward to facilitate dummy installation. If the seat cushion angle automatically changes as the seat is moved from the full forward position, restore the correct seat cushion angle when measuring the pelvic angle as specified in S16.3.2.1.11.

S16.3.2.1.3 *Bucket seats.* Center the dummy on the seat cushion so that its midsagittal plane is vertical and coincides with the vertical longitudinal plane through the center of the seat cushion.

S16.3.2.1.4 *Bench seats.* Position the midsagittal plane of the dummy vertical and parallel to the vehicle's longitudinal centerline and aligned with the center of the steering wheel rim.

S16.3.2.1.5 Hold the dummy's thighs down and push rearward on the upper torso to maximize the dummy's pelvic angle.

S16.3.2.1.6 Place the legs at 90 degrees to the thighs. Push rearward on the dummy's knees to force the pelvis into the seat so there is no gap between the pelvis and the seat back or until contact occurs between the back of the dummy's calves and the front of the seat cushion such that the angle between the dummy's thighs and legs begins to change.

S16.3.2.1.7 Gently rock the upper torso relative to the lower torso laterally in a side to side motion three times through a ± 5 degree arc (approximately 51 mm (2 in) side to side) to reduce friction between the dummy and the seat.

S16.3.2.1.8 Before proceeding, attempt to return the seat to the full forward position if it has been moved from that location as specified in S16.3.2.1.2. If, at any step during the seating procedure, a dummy leg contacts the vehicle interior, position the seat at the next detent where there is no contact. If the seat is a power seat, position the seat to avoid contact while assuring that there is a maximum of 5 mm (0.2 in) distance between the vehicle interior and the point on the dummy that would first contact the vehicle interior.

S16.3.2.1.9 While holding the thighs in place, rotate the seat back forward until the transverse instrumentation platform of the head is level to within ± 0.5 degrees, making sure that the pelvis does not interfere with the seat

bight. Inspect the abdomen to ensure that it is properly installed.

S16.3.2.1.10 If it is not possible to achieve the head level within ± 0.5 degrees, minimize the angle.

S16.3.2.1.11 Measure and set the dummy's pelvic angle using the pelvic angle gage (drawing TE–2504, incorporated by reference in 49 CFR Part 572, Subpart O, of this chapter). The angle shall be set to 20.0 degrees ± 2.5 degrees. If this is not possible, adjust the pelvic angle as close to 20.0 degrees as possible while keeping the transverse instrumentation platform of the head as level as possible as specified in S16.3.2.1.9 and S16.3.2.1.10.

S16.3.2.1.12. If the transverse instrumentation platform of the head is still not level, adjust the seat back angle to minimize the angle as much as possible.

S16.3.2.1.13 In vehicles with a fixed seat back, adjust the lower neck bracket to level the head as much as possible.

S16.3.2.2 *Driver thigh/knee/leg positioning.*

S16.3.2.2.1 Rest the dummy's thighs against the seat cushion to the extent permitted by the placement of the feet in S16.3.2.3.

S16.3.2.2.2 Set the initial transverse distance between the longitudinal centerline of the dummy's knees at 160 to 170 mm (6.3 to 6.7 in), with the thighs and legs of the dummy in vertical planes.

S16.3.2.2.3. If either knee of the dummy contacts the vehicle interior, move the seat rearward to the next detent that provides clearance. If the seat is a power seat, move the seat rearward, while assuring that there is a maximum of 5 mm (0.2 in) distance between the vehicle interior and the dummy knee closest to the vehicle interior.

S16.3.2.3 *Driver foot positioning.*

S16.3.2.3.1 If the vehicle has an adjustable accelerator pedal, adjust it to the full forward position. Rest the right foot of the test dummy on the undepressed accelerator pedal with the rearmost point of the heel on the floor pan in the plane of the pedal. If the foot cannot be placed on the accelerator pedal, set it initially perpendicular to the lower leg and then place it as far forward as possible in the direction of the pedal centerline with the rearmost point of the heel resting on the floor pan. If the vehicle has an adjustable accelerator pedal and the right foot is not touching the accelerator pedal when positioned as above, move the pedal rearward until it touches the right foot. If the accelerator pedal still does not touch the foot in the full rearward position, leave the pedal in that position.

S16.3.2.3.2 If the ball of the foot does not contact the pedal, change the angle of the foot relative to the leg such that the toe of the foot contacts the undepressed accelerator pedal.

S16.3.2.3.3 Place the left foot on the toe board with the rearmost point of the heel resting on the floor pan as close as possible to the point of intersection of the toe board and the floor pan.

S16.3.2.3.4 If the left foot cannot be positioned on the toe board, place the foot flat on the floor pan as far forward as possible.

S16.3.2.3.5 If the left foot does not contact the floor pan, place the foot parallel to the floor and place the leg as perpendicular to the thigh as possible.

S16.3.2.4 *Driver arm/hand positioning.*

S16.3.2.4.1 Place the dummy's upper arms adjacent to the torso with the arm centerlines as close to vertical as possible.

S16.3.2.4.2 Place the palms of the dummy in contact with the outer part of the steering wheel rim at its horizontal centerline with the thumbs inside the steering wheel rim.

S16.3.2.4.3 If it is not possible to position the thumbs inside the steering wheel rim at its horizontal centerline, then position them above and as close to the horizontal centerline of the steering wheel rim as possible.

S16.3.2.4.4 Lightly tape the hands to the steering wheel rim so that if the hand of the test dummy is pushed upward by a force of not less than 9 N (2 lb) and not more than 22 N (5 lb), the tape releases the hand from the steering wheel rim.

S16.3.3 *Passenger dummy positioning.*

S16.3.3.1 *Passenger torso/head/seat back angle positioning.*

S16.3.3.1.1 Fully recline the seat back, if adjustable.

S16.3.3.1.2 Place the dummy in the passenger's seat. If necessary, move the seat rearward to facilitate dummy installation. If the seat cushion angle automatically changes as the seat is moved from the full forward position, restore the correct seat cushion angle when measuring the pelvic angle in S16.3.3.1.11.

S16.3.3.1.3 *Bucket seats.* Center the dummy on the seat cushion so that its midsagittal plane is vertical and coincides with the vertical longitudinal plane through the center of the seat cushion.

S16.3.3.1.4 Bench seats. The midsagittal plane of the dummy shall be vertical and parallel to the vehicle's longitudinal centerline and the same distance from the vehicle's longitudinal centerline as the midsagittal plane of the driver dummy.

S16.3.3.1.5 Hold the dummy's thighs down and push rearward on the upper torso to maximize the dummy's pelvic angle.

S16.3.3.1.6 Place the legs at 90 degrees to the thighs. Push rearward on the dummy's knees to force the pelvis into the seat so there is no gap between the pelvis and the seat back or until contact occurs between the back of the dummy's calves and the front of the seat cushion such that the angle between the dummy's thighs and legs begins to change.

S16.3.3.1.7 Gently rock the upper torso relative to the lower torso laterally side to side three times through a ± 5 degree arc (approximately 51 mm (2 in) side to side).

S16.3.3.1.8 Before proceeding, attempt to return the seat to the full forward position if it has been moved from that location as specified in S16.3.3.1.2. If, at any step during the seating procedure, a dummy leg contacts the vehicle interior, position the seat at the detent where there is no contact. If the seats are power seats, position the seat to avoid contact while assuring that there is a maximum of 5 mm (0.2 in) distance between the vehicle interior and the point on the dummy that would first contact the vehicle interior.

S16.3.3.1.9 While holding the thighs in place, rotate the seat back forward until the transverse instrumentation platform of the head is level to within ± 0.5 degrees, making sure that the pelvis does not interfere with the seat bight. In addition, inspect the abdomen to insure that it is properly installed.

S16.3.3.1.10 If it is not possible to orient the head level within ± 0.5 degrees, minimize the angle.

S16.3.3.1.11 Measure and set the dummy's pelvic angle using the pelvic angle gage (drawing TE–2504, incorporated by reference in 49 CFR Part 572, Subpart O, of this chapter). The angle shall be set to 20.0 degrees ± 2.5 degrees. If this is not possible, adjust the pelvic angle as close to 20.0 degrees as possible while keeping the transverse instrumentation platform of the head as level as possible as specified in S16.3.3.1.9 and S16.3.3.1.10.

S16.3.3.1.12 If the transverse instrumentation platform of the head is still not level, adjust the seat back angle to minimize the angle as much as possible.

S16.3.3.1.13 In vehicles with a fixed seat back, adjust the lower neck bracket to level the head as much as possible.

S16.3.3.2 *Passenger thigh/knee/leg positioning.*

S16.3.3.2.1 Rest the dummy's thighs against the seat cushion to the extent permitted by the placement of the feet in S16.3.3.3.

S16.3.3.2.2 Set the initial transverse distance between the longitudinal centerline of the dummy's knees at 160 to 170 mm (6.3 to 6.7 in), with the thighs and legs of the dummy in vertical longitudinal planes.

S16.3.3.2.3 If either knee of the dummy is in contact with the vehicle interior, move the seat rearward to the next detent that provides clearance. If the seats are power seats, move the seat rearward for a maximum distance of 5 mm (0.2 in) between the vehicle interior and the dummy knee closest to the vehicle interior.

S16.3.3.3 *Passenger foot positioning.*

S16.3.3.3.1 Place the passenger's feet flat on the floor pan as far forward as possible.

S16.3.3.3.2 If either foot does not entirely contact the floor pan, place the foot parallel to the floor and place the legs as perpendicular to the thighs as possible.

S16.3.3.4 *Passenger arm/hand positioning.*

S16.3.3.4.1 Place the dummy's upper arms in contact with the upper seat back and adjacent to the torso.

S16.3.3.4.2 Place the palms of the dummy in contact with the outside of the thighs.

S16.3.3.4.3 Place the little fingers in contact with the seat cushion.

S16.3.4 *Driver and passenger head restraint adjustment.*

S16.3.4.1. Place each adjustable head restraint so that the vertical center of the head restraint is horizontally aligned with the center of gravity (CG) of the dummy head.

S16.3.4.2 If the above position is not attainable, move the vertical center of the head restraint to the closest detent below the center of the head CG.

S16.3.4.3 If the head restraint has a fore and aft adjustment, place the restraint in the forwardmost position or until contact with the head is made, whichever occurs first.

S16.3.4.4 If the head restraint has an automatic adjustment, leave it where the system positions the restraint after the dummy is placed in the seat.

S16.3.5 *Driver and passenger manual belt adjustment (for tests conducted with a belted dummy)*

S16.3.5.1 If an adjustable seat belt D-ring anchorage exists, place it in the manufacturer's design position for a 5th percentile adult female with the seat in the position specified in S16.2.11.1.

S16.3.5.2 Place the Type 2 manual belt around the test dummy and fasten the latch.

S16.3.5.3 Ensure that the dummy's head remains as level as possible, as specified in S16.3.2.1.9, S16.3.2.1.10, S16.3.3.1.9, and S16.3.3.1.10.

S16.3.5.4 Remove all slack from the lap belt. Pull the upper torso webbing out of the retractor and allow it to retract; repeat this operation four times. Apply a 9 N (2 lbf) to 18 N (4 lbf) tension load to the lap belt. If the belt system is equipped with a tension-relieving device, introduce the maximum amount of slack into the upper torso belt that is recommended by the manufacturer. If the belt system is not equipped with a tension-relieving device, allow the excess webbing in the shoulder belt to be retracted by the retractive force of the retractor.

S17 *Offset frontal deformable barrier requirements using 5th percentile adult female test dummies.*

Each vehicle that is certified as complying with S14 shall, at each front outboard designated seating position, meet the injury criteria specified in S15.3 of this standard when the vehicle is crash tested in accordance with the procedures specified in S18 of this standard with the anthropomorphic test devices restrained by a Type 2 seat belt assembly.

S18 *Test procedure for offset frontal deformable barrier requirements using 5th percentile adult female dummies.*

S18.1 *General provisions.* Place a 49 CFR Part 572 Subpart O 5th percentile adult female test dummy at each front outboard seating position of a vehicle, in accordance with the procedures specified in S16.3 of this standard. Impact the vehicle traveling longitudinally forward at any speed, up to and including 40 km/h (25 mph), into a fixed offset deformable barrier under the conditions and procedures specified in S18.2 of this standard, impacting only the driver side of the vehicle.

S18.2 *Test conditions.*

S18.2.1 *Offset frontal deformable barrier.* The offset frontal deformable barrier shall conform to the specifications set forth in Subpart C of Part 587 of this chapter.

S18.2.2 *General test conditions.* All of the test conditions specified in S16.2 of this standard apply.

S18.2.3 *Dummy seating procedures.* Position the anthropomorphic test dummies as specified in S16.3 of this standard.

S18.2.4 *Impact configuration.* The test vehicle shall impact the barrier with the longitudinal centerline of the vehicle parallel to the line of travel and perpendicular to the barrier face within a tolerance of ± 5 degrees. The test vehicle shall be aligned so that the vehicle strikes the barrier with 40 percent overlap on the left side of the vehicle, with the vehicle's front engaging the barrier face such that the vehicle's longitudinal centerline is offset outboard of the edge of the barrier face by 10 percent of the vehicle's width ± 50 mm (2.0 in) as illustrated in Figure 10. The vehicle width is defined as the maximum dimension measured across the widest part of the vehicle, including bumpers and molding but excluding such components as exterior mirrors, flexible mud flaps, marker lamps, and dual rear wheel configurations.

S19 *Requirements to provide protection for infants in rear facing and convertible child restraints and car beds.*

S19.1 Each vehicle certified as complying with S14 shall, at the option of the manufacturer, meet the requirements specified in S19.2 or S19.3, under the test procedures specified in S20.

S19.2 *Option 1—Automatic suppression feature.* Each vehicle shall meet the requirements specified in S19.2.1 through S19.2.3.

S19.2.1 The vehicle shall be equipped with an automatic suppression feature for the passenger air bag which results in deactivation of the air bag during each of the static tests specified in S20.2 (using the 49 CFR Part 572 Subpart R 12-month-old CRABI child dummy in any of the child restraints identified in sections B and C of Appendix A of this standard and the 49 CFR Part 572 Subpart K Newborn Infant dummy in any of the car beds identified in section A of Appendix A, as appropriate), and activation of the air bag system during each of the static tests specified in S20.3 (using the 49 CFR Part 572 Subpart O 5th percentile adult female dummy).

S19.2.2 The vehicle shall be equipped with at least one telltale which emits light whenever the passenger air bag system is deactivated and does not emit light whenever the passenger air bag system is activated, except that the telltale(s) need not illuminate when the passenger seat is unoccupied. Each telltale:

(a) Shall emit yellow light;

(b) Shall have the identifying words ''PASSENGER AIR BAG OFF'' on the telltale or within 25 mm (1.0 in) of the telltale; and

(c) Shall not be combined with the readiness indicator required by S4.5.2 of this standard.

(d) Shall be located within the interior of the vehicle and forward of and above the design H-point of both the driver's and the right front passenger's seat in

their forwardmost seating positions and shall not be located on or adjacent to a surface that can be used for temporary or permanent storage where use of the storage space could obscure the telltale from either the driver's or right front passenger's view.

(e) Shall be visible to the driver and right front passenger under all driving conditions. The means for providing the required visibility may be adjustable to provide two or more levels of brightness, one of which is substantially discernable to a person, of any age, who has adapted to ambient daytime driving conditions, the other of which is substantially discernable to a driver, of any age, who has adapted to ambient nighttime driving conditions. The means for providing the required visibility may be adjustable manually or automatically, except that the telltale(s) may not be adjusted under any conditions to a level that is not visible, e.g., to the nighttime intensity during daytime driving conditions.

S19.2.3 The vehicle shall be equipped with a mechanism that indicates whether the air bag system is suppressed, regardless of whether the passenger seat is occupied. The mechanism need not be located in the occupant compartment unless it is the telltale described in S19.2.2.

S19.3 *Option 2—Low risk deployment*. Each vehicle shall meet the injury criteria specified in S19.4 of this standard when the passenger air bag is deployed in accordance with the procedures specified in S20.4.

S19.4 *Injury criteria for the 49 CFR Part 572, Subpart R 12-month-old CRABI test dummy*.

S19.4.1 All portions of the test dummy and child restraint shall be contained within the outer surfaces of the vehicle passenger compartment.

S19.4.2 *Head injury criteria*.

(a) For any two points in time, t_1 and t_2, during the event which are separated by not more than a 15 millisecond time interval and where t_1 is less than t_2, the head injury criterion (HIC_{15}) shall be determined using the resultant head acceleration at the center of gravity of the dummy head, a_r, expressed as a multiple of g (the acceleration of gravity) and shall be calculated using the expression:

(b) The maximum calculated HIC_{15} value shall not exceed 390.

S19.4.3 The resultant acceleration calculated from the output of the thoracic instrumentation shall not exceed 50 g's, except for intervals whose cumulative duration is not more than 3 milliseconds.

S19.4.4 *Neck injury*. When measuring neck injury, each of the following injury criteria shall be met.

(a) *Nij*.

(1) The shear force (Fx), axial force (Fz), and bending moment (My) shall be measured by the dummy upper neck load cell for the duration of the crash event as specified in S4.10. Shear force, axial force, and bending moment shall be filtered for Nij purposes at SAE J211/1 rev. Mar95 Channel Frequency Class 600 (see S4.7).

(2) During the event, the axial force (Fz) can be either in tension or extension while the occipital condyle bending moment (Mocy) can be in either flexion or extension. This results in four possible loading conditions for Nij: tension-extension (Nte), tension-flexion (Ntf), compression-extension (Nce), or compression-flexion (Ncf).

(3) When calculating Nij using equation S19.4.4(a)(4), the critical values, Fzc and Myc, are:

(i) Fzc = 1460 N (328 lbf) when Fz is in tension

(ii) Fzc = 1460 N (328 lbf) when Fz is in compression

(iii) Myc = 43 Nm (32 lbf-ft) when a flexion moment exists at the occipital condyle

(iv) Myc = 17 Nm (13 lbf-ft) when an extension moment exists at the occipital condyle.

(4) At each point in time, only one of the four loading conditions occurs and the Nij value corresponding to that loading condition is computed and the three remaining loading modes shall be considered a value of zero. The expression for calculating each Nij loading condition is given by:

$$Nij = (Fz / Fzc) + (Mocy / Myc)$$

(5) None of the four Nij values shall exceed 1.0 at any time during the event.

(b) *Peak tension*. Tension force (Fz), measured at the upper neck load cell, shall not exceed 780 N (175 lbf) at any time.

(c) *Peak compression*. Compression force (Fz), measured at the upper neck load cell, shall not exceed 960 N (216 lbf) at any time.

S19.4.5 Unless otherwise indicated, instrumentation for data acquisition, data channel frequency class, and moment calculations are the same as given for the 49 CFR Part 572 Subpart R 12-month-old CRABI test dummy.

S20 *Test procedure for S19*.

S20.1 *General provisions*.

S20.1.1 Tests specifying the use of a car bed, a rear facing child restraint, or a convertible child restraint may be conducted using any such restraint listed in sections A, B, and C of Appendix A of this standard respectively. The car bed, rear facing child restraint, or convertible child restraint may be unused or have been previously used for static suppression tests only; if it has been used, there shall not be any visible damage prior to the test.

S20.1.2 Each vehicle certified to this option shall comply in tests conducted with the right front outboard seating position at the full rearward seat track position, the middle seat track position, and the full forward seat track position. If the child restraint or dummy contacts the vehicle interior, move the seat rearward to the next detent that provides clearance. If the seat is a power seat, move the seat rearward while assuring that there is a maximum of 5 mm (0.2 in) clearance. All tests are conducted with the seat height, if adjustable, in the mid-height position and with the seat back angle, if adjustable, at the manufacturer's nominal design seat back angle for a 50th percentile adult male as specified in S8.1.3.

S20.1.3 If the car bed, rear facing child restraint, or convertible child restraint is equipped with a handle, the vehicle shall comply in tests conducted with the handle at both the child restraint manufacturer's recommended position for use in vehicles and in the upright position.

S20.1.4 If the car bed, rear facing child restraint, or convertible child restraint is equipped with a sunshield, the vehicle shall comply in tests conducted with the sunshield both fully open and fully closed.

S20.1.5 The vehicle shall comply in tests with the car bed, rear facing child restraint, or convertible child restraint uncovered and in tests with a towel or blanket weighing up to 1.0 kg (2.2 lb) placed on or over the restraint in any of the following positions:

(a) with the blanket covering the top and sides of the restraint, and

(b) with the blanket placed from the top of the vehicle's seat back to the forwardmost edge of the restraint.

S20.1.6 Except as otherwise specified, if the car bed, rear facing child restraint, or convertible child restraint has an anchorage system as specified in S5.9 of FMVSS No. 213 and is tested in a vehicle with a right front outboard vehicle seat that has an anchorage system as specified in FMVSS No. 225, the vehicle shall comply with the belted test conditions both with the restraint anchorage system attached and unattached to the vehicle seat anchorage system and with the unbelted test

conditions with the restraint anchorage system unattached to the vehicle seat anchorage system.

S20.1.7 Do not attach any tethers.

S20.2 *Static tests of automatic suppression feature which shall result in deactivation of the passenger air bag.* Each vehicle that is certified as complying with S19.2 shall meet the following test requirements.

S20.2.1 *Belted rear facing and convertible child restraints.*

S20.2.1.1 The vehicle shall comply in tests using any child restraint specified in section B and section C of Appendix A of this standard.

S20.2.1.2 Locate a vertical plane through the longitudinal centerline of the child restraint. This will be referred to as ''Plane A''.

S20.2.1.3 For bucket seats, ''Plane B'' refers to a vertical plane parallel to the vehicle longitudinal centerline through the geometric center of the right front outboard vehicle seat. For bench seats, ''Plane B'' refers to a vertical plane through the right front outboard vehicle seat parallel to the vehicle longitudinal centerline the same distance from the longitudinal centerline of the vehicle as the center of the steering wheel.

S20.2.1.4 *Facing rear.*

(a) The vehicle shall comply in both of the following positions, if applicable:

(1) Without attaching the child restraint anchorage system as specified in S5.9 of FMVSS No. 213 to a vehicle seat anchorage system specified in FMVSS No. 225, align the child restraint system facing rearward such that Plane A is aligned with Plane B.

(2) If the child restraint is certified to S5.9 of FMVSS No. 213, and the vehicle seat has an anchorage system as specified in FMVSS No. 225, attach the child restraint to the vehicle seat anchorage instead of aligning the planes. Do not attach the vehicle safety belt.

(b) While maintaining the child restraint positions achieved in S20.2.1.4(a), secure the child restraint by following, to the extent possible, the child restraint manufacturer's directions regarding proper installation of the restraint in the rear facing mode.

(c) Place any adjustable seat belt anchorages at the vehicle manufacturer's nominal design position for a 50th percentile adult male occupant. Cinch the vehicle belts to any tension from zero up to 134 N (30 lb) to secure the child restraint. Measure belt tension in a flat, straight section of the lap belt between the child restraint belt path and the contact point with the belt anchor or vehicle seat, on the side away from the buckle (to avoid interference from the shoulder portion of the belt).

(d) Position the 49 CFR Part 572 Subpart R 12-month-old CRABI dummy in the child restraint by following, to the extent possible, the manufacturer's instructions for seating infants provided with the child restraint.

(e) Start the vehicle engine or place the ignition in the ''on'' position, whichever will turn on the suppression system, and close all vehicle doors. Wait 10 seconds, then check whether the air bag is deactivated.

S20.2.1.5 *Facing forward (convertible restraints only).*

(a) The vehicle shall comply in both of the following positions, if applicable:

(1) Without attaching the child restraint anchorage system as specified in S5.9 of FMVSS No. 213 to a vehicle seat anchorage system specified in FMVSS No. 225, align the child restraint system facing forward such that Plane A is aligned with Plane B.

(2) If the child restraint is certified to S5.9 of FMVSS No. 213, and the vehicle seat has an anchorage system as specified in FMVSS No. 225, attach the child restraint to the vehicle seat anchorage instead of aligning the planes. Do not attach the vehicle safety belt.

(b) While maintaining the child restraint positions achieved in S20.2.1.5(a), secure the child restraint by following, to the extent possible, the child restraint manufacturer's directions regarding proper installation of the restraint in the forward facing mode.

(c) Place any adjustable seat belt anchorages at the vehicle manufacturer's nominal design position for a 50th percentile adult male occupant. Cinch the vehicle belts to any tension from zero up to 134 N (30 lb) to secure the child restraint. Measure belt tension in a flat, straight section of the lap belt between the child restraint belt path and the contact point with the belt anchor or vehicle seat, on the side away from the buckle (to avoid interference from the shoulder portion of the belt).

(d) Position the 49 CFR Part 572 Subpart R 12-month-old CRABI dummy in the child restraint by following, to the extent possible, the manufacturer's instructions provided with the child restraint.

(e) Start the vehicle engine or place the ignition in the ''on'' position, whichever will turn on the suppression system, and close all vehicle doors. Wait 10 seconds, then check whether the air bag is deactivated.

S20.2.2 *Unbelted rear facing and convertible child restraints.*

S20.2.2.1 The vehicle shall comply in tests using any child restraint specified in section B and section C of Appendix A of this standard.

S20.2.2.2 Locate a vertical plane through the longitudinal centerline of the child restraint. This will be referred to as ''Plane A''.

S20.2.2.3 For bucket seats, ''Plane B'' refers to a vertical plane parallel to the vehicle longitudinal centerline through the geometric center of the right front outboard vehicle seat. For bench seats, ''Plane B'' refers to a vertical plane through the right front outboard seat parallel to the vehicle longitudinal centerline the same distance from the longitudinal centerline of the vehicle as the center of the steering wheel.

S20.2.2.4 *Facing rear.*

(a) Align the child restraint system facing rearward such that Plane A is aligned with Plane B and the child restraint is in contact with the seat back.

(b) Position the 49 CFR Part 572 Subpart R 12-month-old CRABI dummy in the child restraint by following, to the extent possible, the manufacturer's instructions provided with the child restraint.

(c) Start the vehicle engine or place the ignition in the ''on'' position, whichever will turn on the suppression system, and close all vehicle doors. Wait 10 seconds, then check whether the air bag is deactivated.

S20.2.2.5 *Facing forward.*

(a) Align the child restraint system facing forward such that Plane A is aligned with Plane B and the child restraint is in contact with the seat back.

(b) Position the 49 CFR Part 572 Subpart R 12-month-old CRABI dummy in the child restraint by following, to the extent possible, the manufacturer's instructions provided with the child restraint.

(c) Start the vehicle engine or place the ignition in the ''on'' position, whichever will turn on the suppression system, and close all vehicle doors. Wait 10 seconds, then check whether the air bag is deactivated.

S20.2.3 *Tests with a belted car bed.*

S20.2.3.1 The vehicle shall comply in tests using any car bed specified in section A of Appendix A of this standard.

S20.2.3.2 (a) Install the car bed by following, to the extent possible, the car bed manufacturer's directions regarding proper installation of the car bed.

(b) Place any adjustable seat belt anchorages at the vehicle manufacturer's nominal design position for a 50th percentile adult male occupant. Cinch the vehicle belts to any tension from zero up to 134 N (30 lb) to secure the car bed. Measure belt tension in a flat, straight section of the lap belt between the car bed belt path and the contact point with the belt anchor or vehicle seat, on the side away from the

buckle (to avoid interference from the shoulder portion of the belt).

(c) Position the 49 CFR Part 572 Subpart K Newborn Infant dummy in the car bed by following, to the extent possible, the car bed manufacturer's instructions for positioning infants provided with the car bed.

(d) Start the vehicle engine or place the ignition in the ''on'' position, whichever will turn on the suppression system, and close all vehicle doors. Wait 10 seconds, then check whether the air bag is deactivated.

S20.3 *Static tests of automatic suppression feature which shall result in activation of the passenger air bag system.*

S20.3.1 Each vehicle certified to this option shall comply in tests conducted with the right front outboard seating position at the full rearward seat track position, the middle seat track position, and, subject to S16.3.3.1.8, the full forward seat track position. All tests are conducted with the seat height, if adjustable, in the mid-height position.

S20.3.2 Place a 49 CFR Part 572 Subpart O 5th percentile adult female test dummy at the right front outboard seating position of the vehicle, in accordance with procedures specified in S16.3.3 of this standard, except as specified in S20.3.1, subject to the fore-aft seat positions in S20.3.1. Do not fasten the seat belt.

S20.3.3 Start the vehicle engine or place the ignition in the ''on'' position, whichever will turn on the suppression system, and then close all vehicle doors.

S20.3.4 Wait 10 seconds, then check whether the air bag system is activated.

S20.4 *Low risk deployment test.* Each vehicle that is certified as complying with S19.3 shall meet the following test requirements.

S20.4.1 Position the right front outboard vehicle seat in the full forward seat track position, adjust the seat height (if adjustable) to the mid-height position, and adjust the seat back (if adjustable) to the nominal design position for a 50th percentile adult male as specified in S8.1.3. If the child restraint or dummy contacts the vehicle interior, move the seat rearward to the next detent that provides clearance. If the seat is a power seat, move the seat rearward while assuring that there is a maximum of 5 mm (0.2 in) clearance.

S20.4.2 The vehicle shall comply in tests using any child restraint specified in section B and section C of Appendix A to this standard.

S20.4.3 Locate a vertical plane through the longitudinal centerline of the child restraint. This will be referred to as ''Plane A''.

S20.4.4 For bucket seats, ''Plane B'' refers to a vertical plane parallel to the vehicle longitudinal centerline through the geometric center of the right front outboard seat. For bench seats, ''Plane B'' refers to a vertical plane through the right front outboard seat parallel to the vehicle longitudinal centerline that is the same distance from the longitudinal centerline of the vehicle as the center of the steering wheel.

S20.4.5 Align the child restraint system facing rearward such that Plane A is aligned with Plane B.

S20.4.6 If the child restraint is certified to S5.9 of FMVSS No. 213, and the vehicle seat has an anchorage system as specified in FMVSS No. 225, attach the child restraint to the vehicle seat anchorage instead of aligning the planes. Do not attach the vehicle safety belt.

S20.4.7 While maintaining the child restraint position achieved in S20.4.5, secure the child restraint by following, to the extent possible, the child restraint manufacturer's directions regarding proper installation of the restraint in the rear facing mode. Place any adjustable seat belt anchorages at the manufacturer's nominal design position for a 50th percentile adult male occupant. Cinch the vehicle belts to any tension from zero up to 134 N (30 lb) to secure the child restraint. Measure belt tension in a flat, straight section of the lap belt between the child restraint belt path and the contact point with the belt anchor or vehicle seat, on the side away from the buckle (to avoid interference from the shoulder portion of the belt).

S20.4.8 Position the 49 CFR Part 572 Subpart R 12-month-old CRABI dummy in the child restraint by following, to the extent possible, the manufacturer's instructions for seating infants provided with the child restraint.

S20.4.9 Deploy the right front outboard frontal air bag system. If the air bag system contains a multistage inflator, the vehicle shall be able to comply at any stage or combination of stages or time delay between successive stages that could occur in the presence of an infant in a rear facing child restraint positioned according to S20.2.1 in a rigid barrier crash test at speeds up to 64 km/h (40 mph).

S21 *Requirements using 3-year-old child dummies.*

S21.1 Each vehicle that is certified as complying with S14 shall, at the option of the manufacturer, meet the requirements specified in S21.2, S21.3, or S21.4, under the test procedures specified in S22 or S28, as applicable.

S21.2 *Option 1—Automatic suppression feature.* Each vehicle shall meet the requirements specified in S21.2.1 through S21.2.3.

S21.2.1 The vehicle shall be equipped with an automatic suppression feature for the passenger air bag which results in deactivation of the air bag during each of the static tests specified in S22.2 (using a 49 CFR Part 572 Subpart P 3-year-old child dummy and, as applicable, any child restraint specified in section C and section D of Appendix A to this standard), and activation of the air bag system during each of the static tests specified in S22.3 (using a 49 CFR Part 572 Subpart O 5th percentile adult female dummy).

S21.2.2 The vehicle shall be equipped with a telltale light meeting the requirements specified in S19.2.2.

S21.2.3 The vehicle shall be equipped with a mechanism that indicates whether the air bag is suppressed, regardless of whether the passenger seat is occupied. The mechanism need not be located in the occupant compartment unless it is the telltale described in S21.2.2.

S21.3 *Option 2—Dynamic automatic suppression system that suppresses the air bag when an occupant is out of position.* (This option is available under the conditions set forth in S27.1.) The vehicle shall be equipped with a dynamic automatic suppression system for the passenger air bag system which meets the requirements specified in S27.

S21.4 *Option 3—Low risk deployment.* Each vehicle shall meet the injury criteria specified in S21.5 of this standard when the passenger air bag is deployed in accordance with both of the low risk deployment test procedures specified in S22.4.

S21.5 *Injury criteria for the 49 CFR Part 572, Subpart P 3-year-old child test dummy.*

S21.5.1 All portions of the test dummy shall be contained within the outer surfaces of the vehicle passenger compartment.

S21.5.2 *Head injury criteria.*

(a) For any two points in time, t_1 and t_2, during the event which are separated by not more than a 15 millisecond time interval and where t_1 is less than t_2, the head injury criterion (HIC_{15}) shall be determined using the resultant head acceleration at the center of gravity of the dummy head, a_r, expressed as a multiple of g (the acceleration of gravity) and shall be calculated using the expression:

$$\left[\frac{1}{(t_2 - t_1)}\int_{t_1}^{t_2} a_r dt\right]^{2.5}(t_2 - t_1)$$

(b) The maximum calculated HIC_{15} value shall not exceed 570.

S21.5.3 The resultant acceleration calculated from the output of the thoracic instrumentation shall not exceed 55 g's, except for intervals whose cumulative duration is not more than 3 milliseconds.

S21.5.4 Compression deflection of the sternum relative to the spine, as determined by instrumentation, shall not exceed 34 millimeters (1.3 in).

S21.5.5 *Neck injury.* When measuring neck injury, each of the following injury criteria shall be met.

(a) *Nij.*

(1) The shear force (Fx), axial force (Fz), and bending moment (My) shall be measured by the dummy upper neck load cell for the duration of the crash event as specified in S4.10. Shear force, axial force, and bending moment shall be filtered for Nij purposes at SAE J211/1 rev. Mar95 Channel Frequency Class 600 (see S4.7).

(2) During the event, the axial force (Fz) can be either in tension or compression while the occipital condyle bending moment (Mocy) can be in either flexion or extension. This results in four possible loading conditions for Nij: tension-extension (Nte), tension-flexion (Ntf),compression-extension (Nce), or compression-flexion (Ncf).

(3) When calculating Nij using equation S21.5.5(a)(4), the critical values, Fzc and Myc, are:

(i) Fzc = 2120 N (477 lbf) when Fz is in tension

(ii) Fzc = 2120 N (477 lbf) when Fz is in compression

(iii) Myc = 68 Nm (50 lbf-ft) when a flexion moment exists at the occipital condyle

(iv) Myc = 27 Nm (20 lbf-ft) when an extension moment exists at the occipital condyle.

(4) At each point in time, only one of the four loading conditions occurs and the Nij value corresponding to that loading condition is computed and the three remaining loading modes shall be considered a value of zero. The expression for calculating each Nij loading condition is given by:

$$Nij = (Fz/Fzc) + (Mocy/Myc)$$

(5) None of the four Nij values shall exceed 1.0 at any time during the event.

(b) *Peak tension.* Tension force (Fz), measured at the upper neck load cell, shall not exceed 1130 N (254 lbf) at any time.

(c) *Peak compression.* Compression force (Fz), measured at the upper neck load cell, shall not exceed 1380 N (310 lbf) at any time.

S21.5.6 Unless otherwise indicated, instrumentation for data acquisition, data channel frequency class, and moment calculations are the same as given in 49 CFR Part 572 Subpart P 3-year-old child test dummy.

S22 *Test procedure for S21.*

S22.1 *General provisions and definitions.*

S22.1.1 Tests specifying the use of a forward facing child restraint, including a booster seat where applicable, may be conducted using any such restraint listed in section C and section D of Appendix A of this standard, respectively. The child restraint may be unused or have been previously used for static suppression tests only; if it has been used, there shall not be any visible damage prior to the test. Booster seats are to be used in the manner appropriate for a three-year-old child of the same height and weight as the three-year-old child dummy.

S22.1.2 Unless otherwise specified, each vehicle certified to this option shall comply in tests conducted with the right front outboard seating position at the full rearward seat track position, the middle seat track position, and the full forward seat track position. If the dummy contacts the vehicle interior, move the seat rearward to the next detent that provides clearance. If the seat is a power seat, move the seat rearward while assuring that there is a maximum of 5 mm (0.2 in) clearance. All tests are conducted with the seat height, if adjustable, in the mid-height position, and with the seat back angle, if adjustable, at the manufacturer's nominal design seat back angle for a 50th percentile adult male as specified in S8.1.3.

S22.1.3 Except as otherwise specified, if the child restraint has an anchorage system as specified in S5.9 of FMVSS No. 213 and is tested in a vehicle with a right front outboard vehicle seat that has an anchorage system as specified in FMVSS No. 225, the vehicle shall comply with the belted test conditions both with the restraint anchorage system attached and unattached to the vehicle seat anchorage system and with the unbelted test conditions with the restraint anchorage system unattached to the vehicle seat anchorage system.

S22.1.4 Do not attach any tethers.

S22.1.5 The definitions provided in S16.3.1 apply to the tests specified in S22.

S22.2 *Static tests of automatic suppression feature which shall result in deactivation of the passenger air bag.* Each vehicle that is certified as complying with S21.2 shall meet the following test requirements:

S22.2.1 *Belted test with forward facing child restraints or booster seats.*

S22.2.1.1 Install the restraint in the right front outboard seat in accordance, to the extent possible, with the child restraint manufacturer's instructions provided with the seat for use by children with the same height and weight as the three-year-old child dummy.

S22.2.1.2 Locate a vertical plane through the longitudinal centerline of the child restraint. This will be referred to as ''Plane A'.

S22.2.1.3 For bucket seats, ''Plane B'' refers to a vertical plane parallel to the vehicle longitudinal centerline through the geometric center of the right front outboard vehicle seat. For bench seats, ''Plane B'' refers to a vertical plane through the right front outboard vehicle seat parallel to the vehicle longitudinal centerline the same distance from the longitudinal centerline of the vehicle as the center of the steering wheel.

22.2.1.4 The vehicle shall comply in both of the following positions, if applicable:

(a) Without attaching the child restraint anchorage system as specified in S5.9 of FMVSS No. 213 to a vehicle seat anchorage system specified in FMVSS No. 225 and without attaching any tethers, align the child restraint system facing forward such that Plane A is aligned with Plane B.

(b) If the child restraint is certified to S5.9 of FMVSS No. 213, and the vehicle seat has an anchorage system as specified in FMVSS No. 225, attach the child restraint to the vehicle seat anchorage instead of aligning the planes. Do not attach the vehicle safety belt.

S22.2.1.5 *Forward facing child restraint*

S22.2.1.5.1 Place any adjustable seat belt anchorages at the vehicle manufacturer's nominal design position for a 50th percentile adult male occupant. Cinch the vehicle belts to any tension from zero up to 134 N (30 lb) to secure the child restraint. Measure belt tension in a flat, straight section of the lap belt between the child restraint belt path and the contact point with the belt anchor or vehicle seat, on the side away from the buckle (to avoid interference from the shoulder portion of the belt).

S22.2.1.5.2 Position the 49 CFR Part 572 Subpart P 3-year-old child dummy in the child restraint such that the dummy's lower torso is centered on the child restraint and the dummy's spine is against the seat back of the child restraint. Place the arms at the dummy's sides.

S22.2.1.5.3 Attach all belts that come with the child restraint that are appropriate for a child of the same height and weight as the three-year-old child dummy, if any, by following, to the extent possible, the manufacturer's

instructions for seating children provided with the child restraint.

S22.2.1.6 *Booster seat*

S22.2.1.6.1 Place any adjustable seat belt anchorages at the vehicle manufacturer's nominal design position for a 50th percentile adult male occupant. For booster seats designed to be secured to the vehicle seat even when empty, cinch the vehicle belts to any tension from zero up to 134 N (30 lb) to secure the booster seat. Measure belt tension in a flat, straight section of the lap belt between the child restraint belt path and the contact point with the belt anchor or vehicle seat, on the side away from the buckle (to avoid interference from the shoulder portion of the belt).

S22.2.1.6.2 Position the 49 CFR Part 572 Subpart P 3-year-old child dummy in the booster seat such that the dummy's lower torso is centered on the booster seat cushion and the dummy's spine is parallel to the booster seat back or, if there is no booster seat back, the vehicle seat back. Place the arms at the dummy's sides.

S22.2.1.6.3 If applicable, attach all belts that come with the child restraint that are appropriate for a child of the same height and weight as the three-year-old child dummy, if any, by following, to the extent possible, the manufacturer's instructions for seating children provided with the child restraint.

S22.2.1.6.4 If applicable, place the Type 2 manual belt around the test dummy and fasten the latch. Remove all slack from the lap belt portion. Pull the upper torso webbing out of the retractor and allow it to retract; repeat this four times. Apply a 9 to 18 N (2 to 4 lb) tension load to the lap belt. Allow the excess webbing in the upper torso belt to be retracted by the retractive force of the retractor.

S22.2.1.7 Start the vehicle engine or place the ignition in the ''on'' position, whichever will turn on the suppression system, and then close all vehicle doors.

S22.2.1.8 Wait 10 seconds, then check whether the air bag is deactivated.

S22.2.2 *Unbelted tests with dummies.* Place the 49 CFR Part 572 Subpart P 3-year-old child dummy on the right front outboard seat in any of the following positions (without using a child restraint or booster seat or the vehicle's seat belts):

S22.2.2.1 *Sitting on seat with back against seat back*

(a) Position the dummy in the seated position and place it on the right front outboard seat.

(b) In the case of vehicles equipped with bench seats, position the midsagittal plane of the dummy vertically and parallel to the vehicle's longitudinal centerline and the same distance from the vehicle's longitudinal centerline as the center of the steering wheel. In the case of vehicles equipped with bucket seats, position the midsagittal plane of the dummy vertically such that it coincides with the longitudinal centerline of the bucket seat. Position the torso of the dummy against the seat back. Position the dummy's thighs against the seat cushion.

(c) Allow the legs of the dummy to extend off the surface of the seat.

(d) Rotate the dummy's upper arms down until they contact the seat back.

(e) Rotate the dummy's lower arms until the dummy's hands contact the seat cushion.

(f) Start the vehicle engine or place the ignition in the ''on'' position, whichever will turn on the suppression system, and then close all vehicle doors.

(g) Wait 10 seconds, then check whether the air bag is deactivated.

S22.2.2.2 *Sitting on seat with back against reclined seat back.* Repeat the test sequence in S22.2.2.1 with the seat back angle 25 degrees rearward of the manufacturer's nominal design position for the 50th percentile adult male. If the seat will not recline 25 degrees rearward of the nominal design position, use the closest position that does not exceed 25 degrees.

S22.2.2.3 *Sitting on seat with back not against seat back.*

(a) Position the dummy in the seated position and place it on the right front outboard seat.

(b) In the case of vehicles equipped with bench seats, position the midsagittal plane of the dummy vertically and parallel to the vehicle's longitudinal centerline and the same distance from the vehicle's longitudinal centerline as the center of the steering wheel. In the case of vehicles equipped with bucket seats, position the midsagittal plane of the dummy vertically such that it coincides with the longitudinal centerline of the bucket seat. Position the dummy with the spine vertical so that the horizontal distance from the dummy's back to the seat back is no less than 25 mm (1 in) and no more than 150 mm (6 in), as measured along the dummy's midsagittal plane at the mid-sternum level. To keep the dummy in position, a thread with a maximum breaking strength of 311 N (70 lb) that does not interfere with the air bag may be used to hold the dummy.

(c) Position the dummy's thighs against the seat cushion.

(d) Allow the legs of the dummy to extend off the surface of the seat.

(e) Position the upper arms parallel to the spine and rotate the dummy's lower arms until the dummy's hands contact the seat cushion.

(f) Start the vehicle engine or place the ignition in the ''on'' position, whichever will turn on the suppression system, and then close all vehicle doors.

(g) Wait 10 seconds, then check whether the air bag is deactivated.

S22.2.2.4 *Sitting on seat edge, spine vertical, hands by the dummy's sides.*

(a) In the case of vehicles equipped with bench seats, position the midsagittal plane of the dummy vertically and parallel to the vehicle's longitudinal centerline and the same distance from the vehicle's longitudinal centerline as the center of the steering wheel. In the case of vehicles equipped with bucket seats, position the midsagittal plane of the dummy vertically such that it coincides with the longitudinal centerline of the bucket seat.

(b) Position the dummy in the seated position forward in the seat such that the legs are vertical and rest against the front of the seat with the spine vertical. If the dummy's feet contact the floorboard, rotate the legs forward until the dummy is resting on the seat with the feet positioned flat on the floorboard and the dummy spine vertical. To keep the dummy in position, a thread with a maximum breaking strength of 311 N (70 lb) that does not interfere with the air bag may be used to hold the dummy.

(c) Place the upper arms parallel to the spine.

(d) Lower the dummy's lower arms such that they contact the seat cushion.

(e) Start the vehicle engine or place the ignition in the ''on'' position, whichever will turn on the suppression system, and then close all vehicle doors.

(f) Wait 10 seconds, then check whether the air bag is deactivated.

S22.2.2.5 *Standing on seat, facing forward.*

(a) In the case of vehicles equipped with bench seats, position the midsagittal plane of the dummy vertically and parallel to the vehicle's longitudinal centerline and the same distance from the vehicle's longitudinal centerline as the center of the steering wheel rim. In the case of vehicles equipped with bucket seats, position the midsagittal plane of the dummy vertically such that it coincides with the longitudinal centerline of the bucket seat. Position the dummy in a standing position on the right front outboard seat cushion facing the front of the vehicle while placing the heels of the dummy's feet in contact with the seat back.

(b) Rest the dummy against the seat back, with the arms parallel to the spine.

(c) If the head contacts the vehicle roof, recline the seat so that the head is no longer in contact with the vehicle roof, but allow no more than 5 mm (0.2 in) distance between the head and the roof. If the seat does not sufficiently recline to allow clearance, omit the test.

(d) If necessary use a thread with a maximum breaking strength of 311 N (70 lb) that does not interfere with the air bag or spacer blocks to keep the dummy in position.

(e) Start the vehicle engine or place the ignition in the ''on'' position, whichever will turn on the suppression system, and then close all vehicle doors.

(f) Wait 10 seconds, then check whether the air bag is deactivated.

S22.2.2.6 *Kneeling on seat, facing forward.*

(a) Position the dummy in a kneeling position by rotating the dummy's legs 90 degrees behind the dummy (from the standing position) with the toes pointed rearward as much as possible and with the arms parallel to the spine.

(b) In the case of vehicles equipped with bench seats, position the midsagittal plane of the dummy vertically and parallel to the vehicle's longitudinal centerline and the same distance from the vehicle's longitudinal centerline as the center of the steering wheel. In the case of vehicles equipped with bucket seats, position the midsagittal plane of the dummy vertically such that it coincides with the longitudinal centerline of the bucket seat.

(c) Position the kneeling dummy in the right front outboard seat with the dummy facing the front of the vehicle with its toes at the intersection of the seat back and seat cushion. Position the dummy so that the spine is vertical. Push down on the legs so that they contact the seat as much as possible and then release.

(d) If necessary use a thread with a maximum breaking strength of 311 N (70 lb) that does not interfere with the air bag or spacer blocks to keep the dummy in position.

(e) Start the vehicle engine or place the ignition in the ''on'' position, whichever will turn on the suppression system, and then close all vehicle doors.

(f) Wait 10 seconds, then check whether the air bag is deactivated.

S22.2.2.7 *Kneeling on seat, facing rearward.*

(a) Position the dummy in a kneeling position by rotating the dummy's legs 90 degrees behind the dummy (from the standing position) with the toes pointed rearward as much as possible and the arms parallel to the spine.

(b) In the case of vehicles equipped with bench seats, position the midsagittal plane of the dummy vertically and parallel to the vehicle's longitudinal centerline and the same distance from the vehicle's longitudinal centerline as the center of the steering wheel. In the case of vehicles equipped with bucket seats, position the midsagittal plane of the dummy vertically such that it coincides with the longitudinal centerline of the bucket seat.

(c) Position the kneeling dummy in the right front outboard seat with the dummy facing the rear of the vehicle. Position the dummy such that the dummy's head and torso are in contact with the seat back. Push down on the legs so that they contact the seat as much as possible and then release.

(d) Start the vehicle engine or place the ignition in the ''on'' position, whichever will turn on the suppression system, and then close all vehicle doors.

(e) Wait 10 seconds, then check whether the air bag is deactivated.

S22.2.2.8 *Lying on seat.* This test is performed only in vehicles with 3 designated front seating positions.

(a) Lay the dummy on the right front outboard seat such that the following criteria are met:

(1) The midsagittal plane of the dummy is horizontal,

(2) The dummy's spine is perpendicular to the vehicle's longitudinal axis,

(3) The dummy's arms are parallel to its spine,

(4) A plane passing through the two shoulder joints of the dummy is vertical,

(5) The anterior of the dummy is facing the vehicle front,

(6) The head of the dummy is positioned towards the passenger door, and

(7) The horizontal distance from the topmost point of the dummy's head to the vehicle door is 50 to 100 mm (2–4 in).

(b) Rotate the thighs as much as possible toward the chest of the dummy and rotate the legs as much as possible against the thighs.

(c) Move the dummy's upper left arm parallel to the vehicle's transverse plane and the lower left arm 90 degrees to the upper arm. Rotate the lower left arm about the elbow joint and toward the dummy's head until movement is obstructed.

(d) Start the vehicle engine or place the ignition in the ''on'' position, whichever will turn on the suppression system, and then close all vehicle doors.

(e) Wait 10 seconds, then check whether the air bag is deactivated.

S22.3 *Static tests of automatic suppression feature which shall result in activation of the passenger air bag system.*

S22.3.1 Each vehicle certified to this option shall comply in tests conducted with the right front outboard seating position at the full rearward seat track position, the middle seat track position, and, subject to S16.3.3.1.8, the full forward seat track position. All tests are conducted with the seat height, if adjustable, in the mid-height position.

S22.3.2 Place a 49 CFR Part 572 Subpart O 5th percentile adult female test dummy at the right front outboard seating position of the vehicle, in accordance with procedures specified in S16.3.3 of this standard, except as specified in S22.3.1. Do not fasten the seat belt.

S22.3.3 Start the vehicle engine or place the ignition in the ''on'' position, whichever will turn on the suppression system, and then close all vehicle doors.

S22.3.4 Wait 10 seconds, then check whether the air bag system is activated.

S22.4 *Low risk deployment tests.*

S22.4.1 Each vehicle that is certified as complying with S21.4 shall meet the following test requirements with the 49 CFR Part 572, Subpart P 3-year-old child dummy in both of the following positions: Position 1 (S22.4.2) and Position 2 (S22.4.3).

S22.4.1.1 Locate and mark the center point of the dummy's chest/rib plate (the vertical mid-point of the frontal chest plate of the dummy on the midsagittal plane). This is referred to as ''Point 1.''

S22.4.1.2 Locate the vertical plane parallel to the vehicle longitudinal centerline through the geometric center of the right front air bag tear seam. This is referred to as ''Plane D.''

S22.4.1.3 Locate the horizontal plane through the geometric center of the right front air bag tear seam. This is referred to as ''Plane C.''

S22.4.2 *Position 1 (chest on instrument panel).*

S22.4.2.1 There are no seat track, seat height, or seat back angle requirements.

S22.4.2.2 Place the dummy's midsagittal plane coincident with Plane D.

S22.4.2.3 Initially position the thighs at a right angle to the spine and the legs at a right angle to the thighs. These angles may be adjusted to the extent necessary for the head and torso to attain their final positions.

S22.4.2.4 With the dummy's thorax instrument cavity rear face vertical and Point 1 in Plane C, move the dummy forward until Point 1 contacts the instrument panel. If the dummy's head contacts the windshield and keeps Point

1 from contacting the instrument panel, lower the dummy until there is no more than 5 mm (0.2 in) clearance between the head and the windshield.

S22.4.2.5 Position the upper arms parallel to the spine and rotate the lower arms forward (at the elbow joint) sufficiently to prevent contact with or support from the seat.

S22.4.2.6 Position the legs of the dummy so that the legs are vertical and the feet rest flat on the floorboard (or the feet are positioned parallel to the floorboard) of the vehicle.

S22.4.2.7 Use the seat adjustments (fore-aft, height) to keep the dummy in position. If necessary, thread with a maximum breaking strength of 311 N (70 lb) and spacer blocks may be used to support the dummy in position. The thread should support the torso rather than the head. Support the dummy so that there is minimum interference with the full rotational and translational freedom for the upper torso of the dummy and the thread does not interfere with the air bag.

S22.4.3 *Position 2 (head on instrument panel).*

S22.4.3.1 Place the passenger seat in the full rearward seating position. Place the seat back in the manufacturer's nominal design seat back angle for a 50th percentile adult male as specified in S8.1.3. If adjustable in the vertical direction, place the seat in the mid-height position.

S22.4.3.2 Place the dummy in the front passenger seat such that:

S22.4.3.2.1 The dummy's midsagittal plane is coincident with Plane D. With the thighs on the seat, initially set the thighs perpendicular to the torso and the legs perpendicular to the thighs. Position the upper arms parallel to the torso and rotate the lower arms forward (at the elbow) sufficiently to prevent contact with or support from the seat.

S22.4.3.2.2 The dummy is positioned in the seat such that the legs rest against the front of the seat and such that the dummy's thorax instrument cavity rear face is vertical. If it is not possible to position the dummy with the legs in the prescribed position, rotate the legs forward until the dummy is resting on the seat with the feet positioned flat on the floorboard.

S22.4.3.3 Move the seat forward, while maintaining the thorax instrument cavity rear face orientation until any part of the dummy contacts the vehicle's instrument panel.

S22.4.3.4 If contact has not been made with the vehicle's instrument panel at the full forward seating position of the seat, slide the dummy forward on the seat 190 mm (7.5 in) or until contact is made, whichever is first. Maintain the thorax instrument cavity rear face vertical orientation.

S22.4.3.5 If contact has not been made, apply a force towards the front of the vehicle on the spine of the dummy between the shoulder joints until the head or torso comes into contact with the vehicle's instrument panel.

S22.4.3.6 If necessary, rotate the thighs and rotate the legs and feet so as not to impede the motion of the head/torso into the vehicle's instrument panel.

S22.4.3.7 Rotate the lower arms forward if necessary to prevent contact with or support from the seat.

S22.4.3.8 If necessary, thread with a maximum breaking strength of 311 N (70 lb) and spacer blocks may be used to support the dummy in position. The thread should support the torso rather than the head. Support the dummy so that there is minimum interference with the full rotational and translational freedom for the upper torso of the dummy and the thread does not interfere with the air bag.

S22.4.4 Deploy the right front outboard frontal air bag system. If the frontal air bag system contains a multistage inflator, the vehicle shall be able to comply with the injury criteria at any stage or combination of stages or time delay between successive stages that could occur in a rigid barrier crash test at or below 26 km/h (16 mph), under the test procedure specified in S22.5.

S22.5 *Test procedure for determining stages of air bag systems subject to low risk deployment test requirement.*

S22.5.1 Impact the vehicle traveling longitudinally forward at any speed, up to and including 26 km/h (16 mph) into a fixed rigid barrier that is perpendicular ±5 degrees to the line of travel of the vehicle under the applicable conditions of S8 and S10, excluding S10.7, S10.8, and S10.9.

S22.5.2 Determine which inflation stage or combination of stages are fired and determine the time delay between successive stages. That stage or combination of stages, with time delay between successive stages, shall be used in deploying the air bag when conducting the low risk deployment tests described in S22.4, S24.4, and S26.

S22.5.3 If the air bag does not deploy in the impact described in S22.5.1, the low risk deployment tests described in S22.4, S24.4, and S26 will be conducted with the first inflation stage of the air bag system.

S23 *Requirements using 6-year-old child dummies.*

S23.1 Each vehicle that is certified as complying with S14 shall, at the option of the manufacturer, meet the requirements specified in S23.2, S23.3, or S23.4, under the test procedures specified in S24 or S28, as applicable.

S23.2 *Option 1—Automatic suppression feature.* Each vehicle shall meet the requirements specified in S23.2.1 through S23.2.3.

S23.2.1 The vehicle shall be equipped with an automatic suppression feature for the passenger frontal air bag system which results in deactivation of the air bag during each of the static tests specified in S24.2 (using a 49 CFR Part 572 Subpart N 6-year-old child dummy in any of the child restraints specified in section D of Appendix A of this standard), and activation of the air bag system during each of the static tests specified in S24.3 (using a 49 CFR Part 572 Subpart O 5th percentile adult female dummy).

S23.2.2 The vehicle shall be equipped with a telltale light meeting the requirements specified in S19.2.2.

S23.2.3 The vehicle shall be equipped with a mechanism that indicates whether the air bag is suppressed, regardless of whether the passenger seat is occupied. The mechanism need not be located in the occupant compartment unless it is the telltale described in S23.2.2.

S23.3 *Option 2—Dynamic automatic suppression system that suppresses the air bag when an occupant is out of position.* (This option is available under the conditions set forth in S27.1.) The vehicle shall be equipped with a dynamic automatic suppression system for the passenger frontal air bag system which meets the requirements specified in S27.

S23.4 *Option 3—Low risk deployment.* Each vehicle shall meet the injury criteria specified in S23.5 of this standard when the passenger air bag is statically deployed in accordance with both of the low risk deployment test procedures specified in S24.4.

S23.5 *Injury criteria for the 49 CFR Part 572 Subpart N 6-year-old child dummy.*

S23.5.1 All portions of the test dummy shall be contained within the outer surfaces of the vehicle passenger compartment.

S23.5.2 *Head injury criteria.*

(a) For any two points in time, t_1 and t_2, during the event which are separated by not more than a 15 millisecond time interval and where t_1 is less than t_2, the head injury criterion (HIC_{15}) shall be determined using the resultant head acceleration at the center of gravity of the dummy head, a_r, expressed as a multiple of g (the acceleration of gravity) and shall be calculated using the expression:

$$\left[\frac{1}{(t_2 - t_1)}\int_{t_1}^{t_2} a_r dt\right]^{2.5}(t_2 - t_1)$$

(b) The maximum calculated HIC_{15} value shall not exceed 700.

S23.5.3 The resultant acceleration calculated from the output of the thoracic instrumentation shall not exceed 60 g's, except for intervals whose cumulative duration is not more than 3 milliseconds.

S23.5.4 Compression deflection of the sternum relative to the spine, as determined by instrumentation, shall not exceed 40 mm (1.6 in).

S23.5.5 *Neck injury.* When measuring neck injury, each of the following injury criteria shall be met.

(a) *Nij.*

(1) The shear force (Fx), axial force (Fz), and bending moment (My) shall be measured by the dummy upper neck load cell for the duration of the crash event as specified in S4.10. Shear force, axial force, and bending moment shall be filtered for Nij purposes at SAE J211/1 rev. Mar95 Channel Frequency Class 600 (see S4.7).

(2) During the event, the axial force (Fz) can be either in tension or compression while the occipital condyle bending moment (Mocy) can be in either flexion or extension. This results in four possible loading conditions for Nij: tension-extension (Nte), tension-flexion (Ntf), compression-extension (Nce), or compression-flexion (Ncf).

(3) When calculating Nij using equation S23.5.5(a)(4), the critical values, Fzc and Myc, are:

(i) Fzc = 2800 N (629 lbf) when Fz is in tension

(ii) Fzc = 2800 N (629 lbf) when Fz is in compression

(iii) Myc = 93 Nm (69 lbf-ft) when a flexion moment exists at the occipital condyle

(iv) Myc = 37 Nm (27 lbf-ft) when an extension moment exists at the occipital condyle.

(4) At each point in time, only one of the four loading conditions occurs and the Nij value corresponding to that loading condition is computed and the three remaining loading modes shall be considered a value of zero. The expression for calculating each Nij loading condition is given by:

Nij = (Fz / Fzc) + (Mocy / Myc)

(5) None of the four Nij values shall exceed 1.0 at any time during the event.

(b) *Peak tension.* Tension force (Fz), measured at the upper neck load cell, shall not exceed 1490 N (335 lbf) at any time.

(c) *Peak compression.* Compression force (Fz), measured at the upper neck load cell, shall not exceed 1820 N (409 lbf) at any time.

S23.5.6 Unless otherwise indicated, instrumentation for data acquisition, data channel frequency class, and moment calculations are the same as given for the 49 CFR Part 572 Subpart N 6-year-old child test dummy.

S24 *Test procedure for S23.*

S24.1 *General provisions and definitions.*

S24.1.1 Tests specifying the use of a booster seat may be conducted using any such restraint listed in section D of Appendix A of this standard. The booster seat may be unused or have been previously used for static suppression tests only; if it has been used, there shall not be any visible damage prior to the test. Booster seats are to be used in the manner appropriate for a six-year-old child of the same height and weight as the six-year-old child dummy.

S24.1.2 Unless otherwise specified, each vehicle certified to this option shall comply in tests conducted with the right front outboard seating position at the full rearward seat track position, the middle seat track position, and the full forward seat track position. If the dummy contacts the vehicle interior, move the seat rearward to the next detent that provides clearance. If the seat is a power seat, move the seat rearward while assuring that there is a maximum of 5 mm (0.2 in) distance between the vehicle interior and the point on the dummy that would first contact the vehicle interior. All tests are conducted with the seat height, if adjustable, in the mid-height position, and with the seat back angle, if adjustable, at the manufacturer's nominal design seat back angle for a 50th percentile adult male as specified in S8.1.3.

S24.1.3 Except as otherwise specified, if the booster seat has an anchorage system as specified in S5.9 of FMVSS No. 213 and is tested in a vehicle with a right front outboard vehicle seat that has an anchorage system as specified in FMVSS No. 225, the vehicle shall comply with the belted test conditions both with the restraint anchorage system attached and unattached to the vehicle seat anchorage system and with the unbelted test conditions with the restraint anchorage system unattached to the vehicle seat anchorage system.

S24.1.4 Do not attach any tethers.

S24.1.5 The definitions provided in S16.3.1 apply to the tests specified in S24.

S24.2 *Static tests of automatic suppression feature which shall result in deactivation of the passenger air bag.* Each vehicle that is certified as complying with S23.2 shall meet the following test requirements.

S24.2.1 Except as provided in S24.2.2, conduct all tests as specified in S22.2, except that the 49 CFR Part 572 Subpart N 6-year-old child dummy shall be used.

S24.2.2. *Exceptions.* The tests specified in the following paragraphs of S22.2 need not be conducted: S22.2.1.5, S22.2.2.3, S22.2.2.5, S22.2.2.6, S22.2.2.7, and S22.2.2.8.

S24.2.3. *Sitting back in the seat and leaning on the right front passenger door*

(a) Position the dummy in the seated position and place the dummy in the right front outboard seat. For bucket seats, position the midsagittal plane of the dummy vertically such that it coincides with the vertical longitudinal plane through the longitudinal center line of the seat cushion. For bench seats, position the midsagittal plane of the dummy vertically and parallel to the vehicle's longitudinal centerline and the same distance from the longitudinal centerline of the vehicle as the center of the steering wheel.

(b) Place the dummy's back against the seat back and rest the dummy's thighs on the seat cushion.

(c) Allow the legs and feet of the dummy to extend off the surface of the seat. If this positioning of the dummy's legs is prevented by contact with the instrument panel, move the seat rearward to the next detent that provides clearance. If the seat is a power seat, move the seat rearward, while assuring that there is a minimum of 5 mm (0.2 in) distance between the vehicle interior and the part of the dummy that was in contact with the vehicle interior.

(d) Rotate the dummy's upper arms toward the seat back until they make contact.

(e) Rotate the dummy's lower arms down until they contact the seat.

(f) Close the vehicle's passenger-side door and then start the vehicle engine or place the ignition in the ''on'' position, whichever will turn on the suppression system.

(g) Push against the dummy's left shoulder to lean the dummy against the door; close all remaining doors.

(h) Wait 10 seconds, then check whether the air bag is deactivated.

S24.3 *Static tests of automatic suppression feature which shall result in activation of the passenger air bag system.*

S24.3.1 Each vehicle certified to this option shall comply in tests conducted with the right front outboard seating position at the full rearward seat track position, the middle seat track position,

and, subject to S16.3.3.1.8, the full forward seat track position. All tests are conducted with the seat height, if adjustable, in the mid-height position.

S24.3.2 Place a 49 CFR Part 572 Subpart O 5th percentile adult female test dummy at the right front outboard seating position of the vehicle, in accordance with procedures specified in S16.3.3 of this standard, except as specified in S24.3.1. Do not fasten the seat belt.

S24.3.3 Start the vehicle engine or place the ignition in the ''on'' position, whichever will turn on the suppression system, and then close all vehicle doors.

S24.3.4 Wait 10 seconds, then check whether the air bag system is activated.

S24.4 *Low risk deployment tests.*

S24.4.1 Each vehicle that is certified as complying with S23.4 shall meet the following test requirements with the 49 CFR Part 572 Subpart N 6-year-old child dummy in both of the following positions: Position 1 (S24.4.2) or Position 2 (S24.4.3).

S24.4.1.1 Locate and mark the center point of the dummy's rib cage or sternum plate (the vertical mid-point of the frontal chest plate of the dummy on the midsagittal plane). This is referred to as ''Point 1.''

S24.4.1.2 Locate the vertical plane parallel to the vehicle longitudinal centerline through the geometric center of the right front air bag tear seam. This is referred to as ''Plane D.''

S24.4.1.3 Locate the horizontal plane through the geometric center of the right front air bag tear seam. This is referred to as ''Plane C.''

S24.4.2 *Position 1 (chest on instrument panel).*

S24.4.2.1 There are no seat track, seat height, or seat back angle requirements.

S24.4.2.2 Remove the legs of the dummy at the pelvic interface.

S24.4.2.3 Place the dummy's midsagittal plane coincident with Plane D.

S24.4.2.4 With the dummy's thorax instrument cavity rear face 6 degrees forward of the vertical and Point 1 in Plane C, move the dummy forward until Point 1 contacts the instrument panel. If the dummy's head contacts the windshield and keeps Point 1 from contacting the instrument panel, lower the dummy until there is no more than 5 mm (0.2 in) clearance between the head and the windshield.

S24.4.2.5 Position the upper arms parallel to the spine and rotate the lower arms forward (at the elbow joint) sufficiently to prevent contact with or support from the seat.

S24.4.2.6 Use the seat adjustments (fore-aft, height) to keep the dummy in position. If necessary, thread with a maximum breaking strength of 311 N (70 lb) and spacer blocks may be used to support the dummy in position. The thread should support the torso rather than the head. Support the dummy so that there is minimum interference with the full rotational and translational freedom for the upper torso of the dummy and the thread does not interfere with the air bag.

S24.4.3 *Position 2 (head on instrument panel).*

S24.4.3.1 Place the passenger seat in the full rearward seating position. Place the seat back in the nominal design position for a 50th percentile adult male (S8.1.3) as specified by the vehicle manufacturer. If adjustable in the vertical direction, place the seat in the mid-height position.

S24.4.3.2 Place the dummy in the front passenger seat such that:

S24.4.3.2.1 The dummy's midsagittal plane is coincident with Plane D. With the thighs on the seat, initially set the thighs perpendicular to the torso and the legs perpendicular to the thighs. Position the upper arms parallel to the torso and rotate the lower arms forward (at the elbow) sufficiently to prevent contact with or support from the seat.

S24.4.3.2.2 The dummy is positioned in the seat such that the legs rest against the front of the seat and such that the dummy's thorax instrument cavity rear face is 6 degrees forward of vertical. If it is not possible to position the dummy with the legs in the prescribed position, rotate the legs forward until the dummy is resting on the seat with the feet positioned flat on the floorboard.

S24.4.3.3 Move the seat forward, while maintaining the thorax instrument cavity rear face orientation until any part of the dummy contacts the vehicle's instrument panel.

S24.4.3.4 If contact has not been made with the vehicle's instrument panel at the full forward seating position of the seat, slide the dummy forward on the seat 190 mm (7.5 in) or until contact is made, whichever is first. Maintain the thorax instrument cavity rear face orientation.

S24.4.3.5 If contact has not been made, apply a force towards the front of the vehicle on the spine of the dummy between the shoulder joints until the head or torso comes into contact with the vehicle's instrument panel.

S24.4.3.6 If necessary, rotate the thighs and rotate the legs and feet so as not to impede the motion of the head/torso into the vehicle's instrument panel.

S24.4.3.7 Rotate the lower arms forward if necessary to prevent contact with or support from the seat.

S24.4.3.8 If necessary, thread with a maximum breaking strength of 311 N (70 lb) and spacer blocks may be used to support the dummy in position. Thread should support the torso rather than the head. Support the dummy so that there is minimum interference with the full rotational and translational freedom for the upper torso of the dummy and the thread does not interfere with the air bag.

S24.4.4 Deploy the right front outboard frontal air bag system. If the frontal air bag system contains a multistage inflator, the vehicle shall be able to comply with the injury criteria at any stage or combination of stages and at any time delay between successive stages that could occur in a rigid barrier crash at speeds up to 26 km/h (16 mph) under the test procedure specified in S22.5.

S25 *Requirements using an out-of-position 5th percentile adult female dummy at the driver position.*

S25.1 Each vehicle certified as complying with S14 shall, at the option of the manufacturer, meet the requirements specified in S25.2 or S25.3 under the test procedures specified in S26 or S28, as appropriate.

S25.2 *Option 1—Dynamic automatic suppression system that suppresses the air bag when the driver is out of position.* (This option is available under the conditions set forth in S27.1.) The vehicle shall be equipped with a dynamic automatic suppression system for the driver air bag which meets the requirements specified in S27.

S25.3 *Option 2—Low risk deployment.* Each vehicle shall meet the injury criteria specified by S15.3 of this standard, except as modified in S25.4, when the driver air bag is statically deployed in accordance with both of the low risk deployment test procedures specified in S26.

S25.4 *Neck injury criteria driver low risk deployment tests.* When measuring neck injury in low risk deployment tests for the driver position, each of the following neck injury criteria shall be met.

(a) *Nij.*

(1) The shear force (Fx), axial force (Fz), and bending moment (My) shall be measured by the dummy upper neck load cell for the duration of the crash event as specified in S4.10. Shear force, axial force, and bending moment shall be filtered for Nij purposes at SAE J211/1 rev. Mar 95 Channel Frequency Class 600 (see S4.7).

(2) During the event, the axial force (Fz) can be either in tension or compression while the occipital condyle bending moment (Mocy) can be in either flexion or extension. This results in four

possible loading conditions for Nij: tension-extension (Nte), tension-flexion (Ntf), compression-extension (Nce), or compression-flexion (Ncf).

(3) When calculating Nij using equation S25.4(a)(4), the critical values, Fzc and Myc, are:

(i) Fzc = 3880 N (872 lbf) when Fz is in tension

(ii) Fzc = 3880 N (872 lbf) when Fz is in compression

(iii) Myc = 155 Nm (114 lbf-ft) when a flexion moment exists at the occipital condyle

(iv) Myc = 61 Nm (45 lbf-ft) when an extension moment exists at the occipital condyle.

(4) At each point in time, only one of the four loading conditions occurs and the Nij value corresponding to that loading condition is computed and the three remaining loading modes shall be considered a value of zero. The expression for calculating each Nij loading condition is given by:

Nij = (Fz/Fzc) + (Mocy/Myc)

(5) None of the four Nij values shall exceed 1.0 at any time during the event.

(b) *Peak tension.* Tension force (Fz), measured at the upper neck load cell, shall not exceed 2070 N (465 lbf) at any time.

(c) *Peak compression.* Compression force (Fz), measured at the upper neck load cell, shall not exceed 2520 N (566 lbf) at any time.

(d) Unless otherwise indicated, instrumentation for data acquisition, data channel frequency class, and moment calculations are the same as given in 49 CFR Part 572 Subpart O 5th percentile female test dummy.

S26 *Procedure for low risk deployment tests of driver air bag.*

S26.1 Each vehicle that is certified as complying with S25.3 shall meet the requirements of S25.3 and S25.4 with the 49 CFR Part 572 Subpart O 5th percentile adult female dummy in both of the following positions: Driver position 1 (S26.2) and Driver position 2 (S26.3).

S26.2 *Driver position 1 (chin on module).*

S26.2.1 Adjust the steering controls so that the steering wheel hub is at the geometric center of the locus it describes when it is moved through its full range of driving positions. If there is no setting at the geometric center, position it one setting lower than the geometric center. Set the rotation of the steering wheel so that the vehicle wheels are pointed straight ahead.

S26.2.2 Locate the vertical plane parallel to the vehicle longitudinal axis which passes through the geometric center of the driver air bag tear seam. This is referred to as ''Plane E.''

S26.2.3 Place the seat in the full rearward seating position. If adjustable in the vertical direction, place the seat in the mid-height position.

S26.2.4 Place the dummy in a seated position with its midsagittal plane coincident with Plane E.

S26.2.5 Initially position the legs at a 90-degree angle to the thighs. The legs may be adjusted if necessary to achieve the final head position.

S26.2.6 Position the dummy's thorax instrument cavity rear face 6 degrees forward (toward the front of the vehicle) of the steering wheel angle (*i.e.,* if the steering wheel angle is 25 degrees from vertical, the thorax instrument cavity rear face angle is 31 degrees).

S26.2.7 Move the seat forward, while retaining the thorax instrument cavity rear face orientation, to the forwardmost seat track position or until any portion of the dummy contacts the steering wheel, whichever occurs first.

S26.2.8 Adjust the height of the dummy so that the bottom of the chin is in the same horizontal plane as the highest point of the air bag module cover (dummy height can be adjusted using the seat height adjustments and/or spacer blocks). If the seat prevents the bottom of the chin from being in the same horizontal plane as the module cover, adjust the dummy height to as close to the prescribed position as possible.

S26.2.9 Slide the dummy forward on the seat until either the head or the torso contacts the steering wheel.

S26.2.10 Use the seat adjustments (fore-aft, height) to keep the dummy in position. If necessary, thread with a maximum breaking strength of 311 N (70 lb) and spacer blocks may be used to support the dummy in position. The thread should support the torso rather than the head. Support the dummy so that there is minimum interference with the full rotational and translational freedom for the upper torso of the dummy and the thread does not interfere with the air bag.

S26.3 *Driver position 2 (chin on rim).*

S26.3.1 There are no seat track, seat height, or seat back angle requirements.

S26.3.2 Adjust the steering controls so that the steering wheel hub is at the geometric center of the locus it describes when it is moved through its full range of driving positions. If there is no setting at the geometric center, position it one setting lower than the geometric center. Set the rotation of the steering wheel so that the vehicle wheels are pointed straight ahead.

S26.3.3 Locate the vertical plane parallel to the vehicle longitudinal axis which passes through the geometric center of the driver air bag tear seam. This is referred to as ''Plane E.''

S26.3.4 Place the dummy in a seated position with its midsagittal plane coincident with Plane E.

S26.3.5 Initially position the legs at a 90-degree angle to the thighs. The legs may be adjusted if necessary to achieve the final head position.

S26.3.6 Position the dummy's thorax instrument cavity rear face 6 degrees forward (toward the front of the vehicle) of the steering wheel angle (i.e., if the steering wheel angle is 25 degrees from vertical, the thorax instrument cavity rear face angle is 31 degrees).

S26.3.7 Position the dummy so that the center of the chin is in contact with the uppermost portion of the rim of the steering wheel. Do not hook the chin over the top of the rim of the steering wheel. Position the chin to rest on the upper edge of the rim, without loading the neck. If the dummy's head contacts the vehicle windshield or upper interior before the prescribed position can be obtained, lower the dummy until there is no more than 5 mm (0.2 in) clearance between the vehicle's windshield or upper interior, as applicable.

S26.3.8 Use the seat adjustments (fore-aft, height) to keep the dummy in position. If necessary, thread with a maximum breaking strength of 311 N (70 lb) and spacer blocks may be used to support the dummy in position. The thread should support the torso rather than the head. Support the dummy so that there is minimum interference with the full rotational and translational freedom for the upper torso of the dummy and the thread does not interfere with the air bag.

S26.4 Deploy the left front outboard frontal air bag system. If the air bag system contains a multistage inflator, the vehicle shall be able to comply with the injury criteria at any stage or combination of stages or time delay between successive stages that could occur in a rigid barrier crash at speeds up to 26 km/h (16 mph) under the test procedure specified in S22.5.

S27 *Option for dynamic automatic suppression system that suppresses the air bag when an occupant is out-of-position.*

S27.1 *Availability of option.* This option is available for either air bag, singly or in conjunction, subject to the requirements of S27, if:

(a) A petition for rulemaking to establish dynamic automatic suppression system test procedures is submitted pursuant to Subpart B of Part 552 and a test procedure applicable to the vehicle is added to S28 pursuant to the procedures specified by that subpart, or

(b) A test procedure applicable to the vehicle is otherwise added to S28.

S27.2 *Definitions.* For purposes of S27 and S28, the following definitions apply:

Automatic suppression zone or ASZ means a three-dimensional zone adjacent to the air bag cover, specified by the vehicle manufacturer, where the deployment of the air bag will be suppressed by the DASS if a vehicle occupant enters the zone under specified conditions.

Dynamic automatic suppression system or DASS means a portion of an air bag system that automatically controls whether or not the air bag deploys during a crash by:

(1) Sensing the location of an occupant, moving or still, in relation to the air bag;

(2) Interpreting the occupant characteristics and location information to determine whether or not the air bag should deploy; and

(3) Activating or suppressing the air bag system based on the interpretation of occupant characteristics and location information.

S27.3 *Requirements.* Each vehicle shall, at each applicable front outboard designated seating position, when tested under the conditions of S28 of this standard, comply with the requirements specified in S27.4 through S27.6.

S27.4 Each vehicle shall be equipped with a DASS.

S27.5 *Static test requirement (low risk deployment for occupants outside the ASZ).*

S27.5.1 *Driver (49 CFR Part 572 Subpart O 5th percentile female dummy).* Each vehicle shall meet the injury criteria specified in S15.3 of this standard when the driver air bag is deployed in accordance with the procedures specified in S28.1.

S27.5.2 *Passenger (49 CFR Part 572 Subpart P 3-year-old child dummy and 49 CFR Part 572 Subpart N 6-year-old child dummy).* Each vehicle shall meet the injury criteria specified in S21.5 and S23.5, as appropriate, when the passenger air bag is deployed in accordance with the procedures specified in S28.2.

S27.6 *Dynamic test requirement (suppression of air bag for occupants inside the ASZ).*

S27.6.1 *Driver.* The DASS shall suppress the driver air bag before the head, neck, or torso of the specified test device enters the ASZ when the vehicle is tested under the procedures specified in S28.3.

S27.6.2 *Passenger.* The DASS shall suppress the passenger air bag before head, neck, or torso of the specified test device enters the ASZ when the vehicle is tested under the procedures specified in S28.4.

S28 *Test procedure for S27 of this standard.* [Reserved]

S28.1 *Driver suppression zone verification test (49 CFR Part 572 Subpart O 5th percentile female dummy).* [Reserved]

S28.2 *Passenger suppression zone verification test (49 CFR Part 572 Subpart P 3-year-old child dummy and 49 CFR Part 572 Subpart N 6-year-old child dummies).* [Reserved]

S28.3 *Driver dynamic test procedure for DASS requirements.* [Reserved]

S28.4 *Passenger dynamic test procedure for DASS requirements.* [Reserved]

S29 *Manufacturer option to certify vehicles to certain static suppression test requirements using human beings rather than test dummies.*

S29.1 At the option of the manufacturer, instead of using test dummies in conducting the tests for the following static test requirements, human beings may be used as specified. If human beings are used, they shall assume, to the extent possible, the final physical position specified for the corresponding dummies for each test.

(a) If a manufacturer decides to certify a vehicle using a human being for a static test, it shall use humans for the entire series of tests, e.g., 3-year-old children for each static test involving 3-year-old test dummies. If a manufacturer decides to certify a vehicle using a test dummy for a static test, it shall use test dummies for the entire series of tests, e.g., a Hybrid III 3-year-old child dummy for each static test involving 3-year-old test dummies.

(b) For S21.2, instead of using the 49 CFR Part 572 Subpart P 3-year-old child dummy, a human child who weighs between 13.4 and 18 kg (29.5 and 39.5 lb), and who is between 89 and 99 cm (35 and 39 in) tall may be used.

(c) For S23.2, instead of using the 49 CFR Part 572 Subpart N 6-year-old child dummy, a human child who weighs between 21 and 25.6 kg (46.5 and 56.5 lb), and who is between 114 and 124.5 cm (45 and 49 in) tall may be used.

(d) For S19.2, S21.2, and S23.2, instead of using the 49 CFR Part 572 Subpart O 5th percentile adult female test dummy, a female who weighs between 46.7 and 51.25 kg (103 lb and 113 lb), and who is between 139.7 and 150 cm (55 and 59 in) tall may be used.

S29.2 Human beings shall be dressed in a cotton T-shirt, full length cotton trousers, and sneakers. Specified weights and heights include clothing.

S29.3 A manufacturer exercising this option shall upon request—

(a) Provide NHTSA with a method to deactivate the air bag during compliance testing under S20.3, S22.2, S22.3, S24.2, and S24.3, and identify any parts or equipment necessary for deactivation; such assurance may be made by removing the air bag; and

(b) Provide NHTSA with a method to assure that the same test results would be obtained if the air bag were not deactivated.

Figures to § 571.208

* * * * *

BILLING CODE 4910–59–P

Figure 8. Sun Visor Label Visible when Visor is in Down Position.

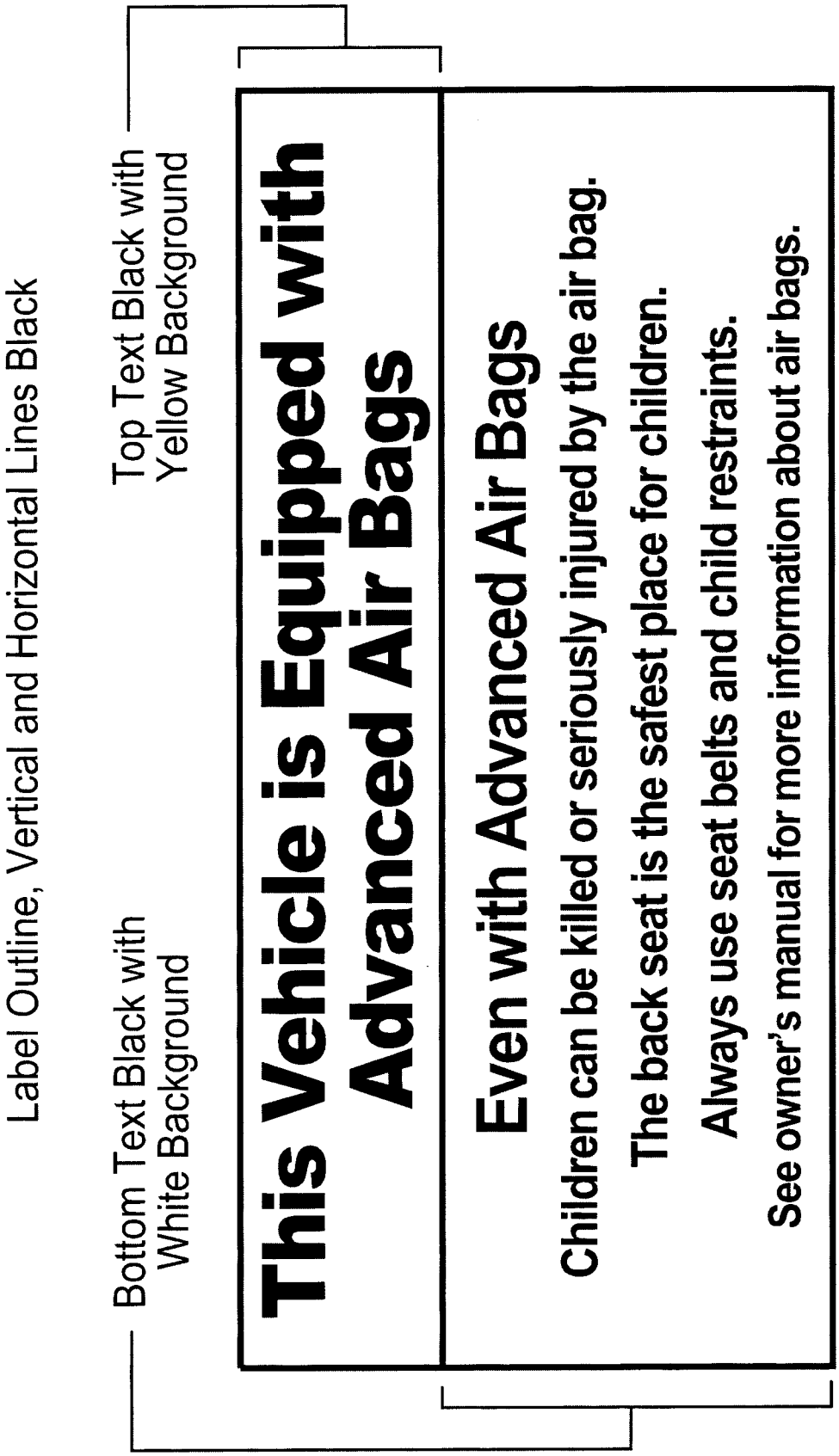

Figure 9. Removable Label on Dash.

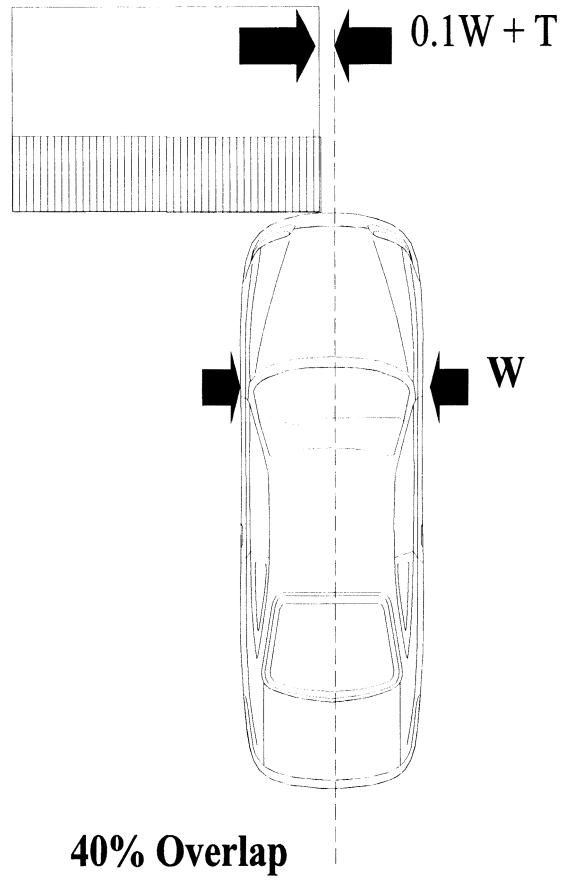

Legend

---- Longitudinal Centerline of Vehicle

W Vehicle Width

T Tolerance

Figure 10 Configuration for Frontal Offset Deformable Barrier Test

BILLING CODE 4910–59–C

Appendix A to § 571.208—Selection of Child Restraint Systems

A. The following car bed, manufactured on or after December 1, 1999, may be used by the National Highway Traffic Safety Administration to test the suppression system of a vehicle that has been certified as being in compliance with 49 CFR Part 571.208 S19:

Cosco Dream Ride 02–719

B. Any of the following rear facing child restraint systems, manufactured on or after December 1, 1999, may be used by the National Highway Traffic Safety Administration to test the suppression system of a vehicle that has been certified as being in compliance with 49 CFR Part 571.208 S19. When the restraint system comes equipped with a removable base, the test may be run either with the base attached or without the base.

Britax Handle with Care 191
Century 560 Institutional 4590
Century Smart Fit 4541
Cosco Arriva 02–750
Cosco Turnabout 02–772
Evenflo Discovery 209
Evenflo First Choice 204
Evenflo On My Way 207
Evenflo Position Right 200
Graco Infant 8457
Kolcraft Secura 43924

C. Any of the following forward-facing convertible child restraint systems, manufactured on or after December 1, 1999, may be used by the National Highway Traffic Safety Administration to test the suppression system of a vehicle that has been certified as being in compliance with 49 CFR Part 571.208 S19, or S21:

Britax Roundabout 161
Century Encore 4612
Cosco Touriva 02–584
Evenflo Champion 249
Evenflo Medallion 254
Fisher Price Safe-Embrace 79701
Kolcraft Performa 23308

D. Any of the following forward-facing toddler/belt positioning booster systems, manufactured on or after December 1, 1999, may be used by the National Highway Traffic Safety Administration as test devices to test the suppression system of a vehicle that has been certified as being in compliance with 49 CFR Part 571.208 S21 or S23:

Britax Cruiser 121
Century Next Step 4920
Cosco High Back Booster 02–442
Evenflo Right Fit 245

6. Part 585 is revised to read as follows:

PART 585—ADVANCED AIR BAG PHASE-IN REPORTING REQUIREMENTS

Sec.
585.1 Scope.
585.2 Purpose.
585.3 Applicability.
585.4 Definitions.
585.5 Reporting requirements.
585.6 Records.
585.7 Petitions to extend period to file report.

Authority: 49 U.S.C. 322, 30111, 30115, 30117, and 30166; delegation of authority at 49 CFR 1.50.

§ 585.1 Scope.

This part establishes requirements for manufacturers of passenger cars and trucks, buses, and multipurpose passenger vehicles with a GVWR of 3,855 kg (8500 lb) or less and an unloaded vehicle weight of 2,495 kg (5500 lb) or less to submit reports, and maintain records related to the reports, concerning the number and identification of such vehicles that are certified as complying with the advanced air bag requirements of Standard No. 208, ''Occupant crash protection'' (49 CFR 571.208).

§ 585.2 Purpose.

The purpose of these reporting requirements is to aid the National Highway Traffic Safety Administration in determining whether a manufacturer has complied with the advanced air bag requirements of Standard No. 208 during the phase-ins of those requirements.

§ 585.3 Applicability.

This part applies to manufacturers of passenger cars and trucks, buses, and multipurpose passenger vehicles with a GVWR of 3,855 kg (8500 lb) or less and an unloaded vehicle weight of 2,495 kg (5500 lb) or less. However, this part does not apply to any manufacturers whose production consists exclusively of walk-in vans, vehicles designed to be sold exclusively to the U.S. Postal Service, vehicles manufactured in two or more stages, and vehicles that are altered after previously having been certified in accordance with part 567 of this chapter. In addition, this part does not apply to manufacturers whose worldwide production of motor vehicles is less than 5000 vehicles in a production year.

§ 585.4 Definitions.

(a) All terms defined in 49 U.S.C. 30102 are used in accordance with their statutory meaning.

(b) The terms *bus, gross vehicle weight rating or GVWR, multipurpose passenger vehicle, passenger car,* and *truck* are used as defined in section 571.3 of this chapter.

(c) For the purposes of this part, *vehicles* means passenger cars and trucks, buses, and multipurpose passenger vehicles with a GVWR of 3,855 kg (8500 lb) or less and an unloaded vehicle weight of 2,495 kg (5500 lb) or less manufactured for sale in the United States by manufacturers whose worldwide production of motor vehicles is equal to or greater than 5000 vehicles in a production year, and does not mean walk-in vans, vehicles designed to be sold exclusively to the U.S. Postal Service, vehicles manufactured in two or more stages, and vehicles that are altered after previously having been certified in accordance with part 567 of this chapter.

(d) *Phase one of the advanced air bag requirements of Standard No. 208* refers to the requirements set forth in S14.1, S14.2, S14.5.1(a), S14.5.2, S15.1, S15.2, S17, S19, S21, S23, and S25 of Federal Motor Vehicle Safety Standard No. 208, 49 CFR 571.208.

(e) *Phase two of the advanced air bag requirements of Standard No. 208* refers to the requirements set forth in S14.3, S14.4, S14.5.1(b), S14.5.2, S15.1, S15.2, S17, S19, S21, S23, and S25 of Federal Motor Vehicle Safety Standard No. 208, 49 CFR 571.208.

(f) *Production year* means the 12-month period between September 1 of one year and August 31 of the following year, inclusive.

(g) *Limited line manufacturer* means a manufacturer that sells two or fewer carlines, as that term is defined in 49 CFR 583.4, in the United States during a production year.

§ 585.5 Reporting requirements.

(a) *Advanced credit phase-in reporting requirements.*

(1) Within 60 days after the end of the production years ending August 31, 2000, August 31, 2001, August 31, 2002, and August 31, 2003, each manufacturer choosing to certify vehicles manufactured during any of those production years as complying with phase one of the advanced air bag requirements of Standard No. 208 shall submit a report to the National Highway Traffic Safety Administration as specified in this section.

(2) Within 60 days after the end of the production year ending August 31, 2007, each manufacturer choosing to certify vehicles manufactured during that production year as complying with phase two of the advanced air bag requirements of Standard No. 208 shall submit a report to the National Highway Traffic Safety Administration as specified in this section.

(3) Each report shall—

(i) Identify the manufacturer;

(ii) State the full name, title, and address of the official responsible for preparing the report;

(iii) Identify the production year being reported on;

(iv) Provide the information specified in paragraph (c) of this section;

(v) Be written in the English language; and

(vi) Be submitted to: Administrator, National Highway Traffic Safety Administration, 400 Seventh Street, SW, Washington, DC 20590.

(b) *Phase-in reporting requirements.*

(1) Within 60 days after the end of the production years ending August 31, 2004, August 31, 2005, and August 31, 2006, each manufacturer shall submit a report to the National Highway Traffic Safety Administration regarding its compliance with phase one of the advanced air bag requirements of Standard No. 208 for its vehicles produced in that production year. Each report shall also specify the number of advance credit vehicles, if any, that are being applied to the production year being reported on.

(2) Within 60 days after the end of the production years ending August 31, 2008, August 31, 2009, and August 31, 2010, each manufacturer shall submit a report to the National Highway Traffic Safety Administration regarding its compliance with phase two of the advanced air bag requirements of Standard No. 208 for its vehicles produced in that production year. Each report shall also specify the number of advance credit vehicles, if any, that are being applied to the production year being reported on.

(3) Each report shall—

(i) Identify the manufacturer;

(ii) State the full name, title, and address of the official responsible for preparing the report;

(iii) For limited line manufacturers, specify whether the manufacturer has elected to comply with S14.1(a) or S14.1(b), or S14.3(a) or S14.3(b) of 49 CFR 571.208, as applicable;

(iv) Identify the production year being reported on;

(v) Contain a statement regarding whether or not the manufacturer complied with phase one of the advanced air bag requirements of Standard No. 208 or phase two of the advanced air bag requirements of Standard No. 208, as applicable to the period covered by the report, and the basis for that statement;

(vi) Provide the information specified in paragraph (d) of this section;

(vii) Be written in the English language; and

(viii) Be submitted to: Administrator, National Highway Traffic Safety Administration, 400 Seventh Street, SW, Washington, DC 20590.

(c) *Advanced credit phase-in report content.*

(1) *Production of complying vehicles.*

(i) With respect to the reports identified in section 585.5(a)(1), each manufacturer shall report for the production year for which the report is filed the number of vehicles, by make and model year, that meet the applicable advanced air bag requirements of Standard No. 208, and to which advanced air bag requirements the vehicles are certified.

(ii) With respect to the report identified in section 585.5(a)(2), each manufacturer shall report the number of vehicles, by make and model year, that meet the applicable advanced air bag requirements of Standard No. 208, and to which advanced air bag requirements the vehicles are certified.

(2) *Vehicles produced by more than one manufacturer.* Each manufacturer whose reporting of information is affected by one or more of the express written contracts permitted by S14.1.3.2 or S14.3.3.2 of Standard No. 208 shall:

(i) Report the existence of each contract, including the names of all parties to the contract and explain how the contract affects the report being submitted.

(ii) Report the number of vehicles covered by each contract in each production year.

(d) *Phase-in report content.*

(1) *Basis for phase-in production requirements.* For production years ending August 31, 2003, August 31, 2004, August 31, 2005, August 31, 2007, August 31, 2008, and August 31, 2009, each manufacturer shall provide the number of vehicles manufactured in the current production year, or, at the manufacturer's option, for the current production year and each of the prior two production years if the manufacturer has manufactured vehicles during both of the two production years prior to the year for which the report is being submitted.

(2) *Production of complying vehicles.* Each manufacturer shall report for the production year for which the report is filed the number of vehicles, by make and model year, that meet the applicable advanced air bag requirements of Standard No. 208, and to which advanced air bag requirements the vehicles are certified.

(3) *Vehicles produced by more than one manufacturer.* Each manufacturer whose reporting of information is affected by one or more of the express written contracts permitted by S14.1.3.2 or S14.3.3.2 of Standard No. 208 shall:

(i) Report the existence of each contract, including the names of all parties to the contract and explain how the contract affects the report being submitted.

(ii) Report the number of vehicles covered by each contract in each production year.

§ 585.6 Records.

Each manufacturer shall maintain records of the Vehicle Identification Number of each vehicle for which information is reported under § 585.5(c)(1) and (d)(2) until December 31, 2011.

§ 585.7 Petitions to extend period to file report.

A petition for extension of the time to submit a report required under this part shall be received not later than 15 days before the report is due. The petition shall be submitted to: Administrator, National Highway Traffic Safety Administration, 400 Seventh Street, SW, Washington, DC 20590. The filing of a petition does not automatically extend the time for filing a report. A petition will be granted only if the petitioner shows good cause for the extension, and if the extension is consistent with the public interest.

PART 595—RETROFIT ON-OFF SWITCHES FOR AIR BAGS

7. The authority citation for part 595 continues to read as follows:

Authority: 49 U.S.C. 322, 30111, 30115, 30117, 30122 and 30166; delegation of authority at 49 CFR 1.50.

8. Section 595.5 is amended by revising paragraph (a) to read as follows:

§ 595.5 Requirements.

(a) Beginning January 19, 1998, a dealer or motor vehicle repair business may modify a motor vehicle manufactured before September 1, 2012 by installing an on-off switch that allows an occupant of the vehicle to turn off an air bag in that vehicle, subject to the conditions in paragraphs (b)(1) through (5) of this section.

* * * * *

Issued on: May 4, 2000.

Rosalyn G. Millman,

Acting Administrator.

[FR Doc. 00–11577 Filed 5–5–00; 10:30 am]

BILLING CODE 4910–59–P

Federal Register

Friday,
May 12, 2000

Part III

Department of the Interior

Fish and Wildlife Service

50 CFR Part 32

1999–2000 Refuge-Specific Hunting and Sport Fishing Regulations; Final Rule

DEPARTMENT OF THE INTERIOR

Fish and Wildlife Service

50 CFR Part 32

RIN 1018–AF52

1999–2000 Refuge-Specific Hunting and Sport Fishing Regulations

AGENCY: Fish and Wildlife Service, Interior.

ACTION: Final rule.

SUMMARY: We are adding certain national wildlife refuges (refuges) to the list of areas open for hunting and/or sport fishing, along with pertinent refuge-specific regulations for such activities; and amend certain regulations on other refuges that pertain to migratory game bird hunting, upland game hunting, big game hunting, and sport fishing for the 1999–2000 season.

DATES: This rule is effective May 12, 2000.

FOR FURTHER INFORMATION CONTACT: Leslie A. Marler, (703) 358–2397; Fax (703) 358–2248.

SUPPLEMENTARY INFORMATION: The National Wildlife Refuge System Administration Act of 1966 (NWRSAA) closes national wildlife refuges to hunting and sport fishing until we open them by rulemaking. The Secretary of the Interior (Secretary) may open refuge areas to hunting and/or fishing upon a determination that such uses are compatible with the purposes of the refuge. The action also must be in accordance with provisions of all laws applicable to the areas, must be consistent with the principles of sound fish and wildlife management and administration, and otherwise must be in the public interest. These requirements ensure that we maintain the biological integrity, diversity, and environmental health of the National Wildlife Refuge System (System) for the benefit of present and future generations of Americans.

We review refuge hunting and fishing programs annually to determine whether to add additional refuges or whether individual refuge regulations governing existing programs need modifications, deletions, or additions made to them. Changing environmental conditions, State and Federal regulations, and other factors affecting wildlife populations and habitat may warrant modifications ensuring the continued compatibility of hunting and fishing programs and that these programs will not materially interfere with or detract from the fulfillment of the mission of the System or the purposes of the refuge.

You may find provisions governing hunting and fishing on national wildlife refuges in 50 CFR part 32. We regulate hunting and fishing on refuges to:

- Ensure compatibility;
- Properly manage the fish and wildlife resource;
- Protect other refuge values; and
- ensure refuge user safety.

On many refuges, our general policy of adopting regulations identical to State hunting and fishing regulations is adequate in meeting these objectives. On other refuges, it is necessary to supplement State regulations with more restrictive Federal regulations to ensure that we meet our management responsibilities, as outlined under the section entitled ''Statutory Authority.'' We issue refuge-specific hunting and fishing regulations when we open wildlife refuges to either migratory game bird hunting, upland game hunting, big game hunting, or sport fishing. These regulations list the wildlife species that you may hunt or those species subject to sport fishing, seasons, bag limits, methods of hunting or fishing, descriptions of open areas, and other provisions as appropriate. You may find previously issued, refuge-specific regulations for hunting and fishing in 50 CFR part 32. We are promulgating many of the amendments to these sections to standardize and clarify the existing language of these regulations.

Some refuges may make seasonal information available in brochures or leaflets to supplement these refuge-specific regulations, which we provide for in 50 CFR 25.31.

We are making several corrections to 50 CFR:

- In 50 CFR 32.71 Pacific Islands Territory, we are changing the section heading to read ''United States unincorporated Pacific insular possessions'' with two refuges: Johnston Atoll National Wildlife Refuge and Midway Atoll National Wildlife Refuge. We moved Kilauea Point National Wildlife Refuge to Hawaii (§ 32.30), and we moved Guam National Wildlife Refuge to a new section § 32.72 Guam.
- We are eliminating redundant refuge-specific regulations for Ohio River National Wildlife Refuge that we currently list in the States of Pennsylvania, West Virginia and Kentucky. We will list Ohio River National Wildlife Refuge in West Virginia. Pennsylvania and Kentucky will refer the reader to West Virginia for refuge-specific regulations.

Plain Language Mandate

In this rule the vast majority of the revisions to the individual refuge units are to comply with a Presidential mandate to use plain language in regulations and do not modify the substance of the previous restrictions. These types of changes include using ''you'' to refer to the reader and ''we'' to refer to the Service and using the word ''allow'' instead of ''permit'' when we do not require the use of a permit for an activity. Only a handful of refuge-specific regulations contain the substantive changes discussed below.

Use of Only Approved Nontoxic Shot

In 50 CFR part 32, we provide for the prohibition of the possession of toxic shot in the field on Waterfowl Production Areas (WPAs) and certain other areas (refuges or areas within refuges) of the System. We delineated these areas on maps, leaflets, and/or signs (available at each refuge headquarters or posted at each refuge) or as stated in refuge-specific regulations. Where we allow turkey and deer hunting, you may use slugs and shot containing lead to hunt these species unless prohibited by refuge-specific regulations and/or State law.

We specifically identify the shot allowed in areas of the System by reference to the shot identified in 50 CFR 20.21(j). We sometimes grant new shot types conditional approvals until we complete all necessary studies. These conditional approvals change yearly, and we add new shot types to our approved list as they meet our criteria. To avoid any confusion, we amend *§ 32.2 What are the general provisions regarding hunting on areas of the National Wildlife Refuge System?* to state that you may possess only ''approved'' nontoxic shot in the field which we identify in 50 CFR 20.21(j), while on Waterfowl Production Areas or on certain other areas of the National Wildlife Refuge System. We also amend affected refuges listed in *Subpart B.—'' Refuge-Specific Regulations for Hunting and Fishing* to reflect that hunters may possess only approved nontoxic shot while in the field. We removed any reference to ''use'' of nontoxic shot to be consistent with 50 CFR 20.21(j).

Establishment of Lead-Free Fishing Areas

We will not be making a decision on the establishment of lead-free fishing areas in this final rule. We will address this issue in a separate final rule at a later date.

Response to Comments Received

In the August 11, 1999, issue of the **Federal Register** (64 FR 43834) we published a proposed rulemaking identifying the refuges and their proposed hunting and/or fishing programs and invited public comments. We reviewed and considered all substantive comments following a 30-day public comment period.

In all we received 37 comments from the proposed rule: 1 State conservation agency; 4 non-government organizations; and 32 individuals. Nearly all the comments were concerning refuges allowing hunting. We addressed multiple comments from some commenters individually.

Comment: 32 commenters expressed their opposition to the proposal to open additional refuges to hunting and/or fishing or to the existing refuges open to hunting and/or fishing.

Response: The National Wildlife Refuge System Administration Act authorizes permitting any compatible uses on refuges and specifically includes hunting. The principal focus of the National Wildlife Refuge System Improvement Act of 1997 (NWRSIA), which amended the NWRSAA, was to clearly establish a wildlife conservation mission for the System and provide managers clear direction and procedures for making determinations regarding wildlife conservation and public uses within the areas of the System. When Congress passed the NWRSIA, it reaffirmed that the System was created to conserve fish, wildlife, and plants and their habitats; and that this had been facilitated by providing Americans opportunities to participate in compatible wildlife-dependent recreation, including hunting and/or fishing on System areas. The NWRSIA establishes six wildlife-dependent recreational uses as the priority general public uses of the Refuge System where compatible. Those priority uses are: hunting, fishing, wildlife observation, wildlife photography, environmental education, and interpretation. The Act directs the Secretary to facilitate those uses.

Comment: We received a comment suggesting that we more fully describe in our **SUPPLEMENTARY INFORMATION** section that ''the opening of these new areas is beneficial in terms of offering valuable additional recreational opportunities to sportsmen .....[and] consistent with the purposes of the National Wildlife Refuge System and the National Wildlife Refuge System Improvement Act of 1997 ...''

Response: We have described the ramifications of the NWRSIA in the Statutory Authority section of the **SUPPLEMENTARY INFORMATION** section.

Comment: One commenter questioned the opening of Bayou Teche National Wildlife Refuge in Louisiana to migratory bird, upland game, and big game hunting as the Refuge ''has not yet been created.''

Response: We proposed the opening of Bayou Teche National Wildlife Refuge in anticipation of the completion of the acquisition process by the time we would publish the final rule. We are still finalizing this process and will remove the refuge opening from this rule.

Comment: We received one comment from a State fish and game authority requesting that we coordinate closely with them on proposing any limitations to our hunting and fishing programs.

Response: We will do so. Our refuge managers and regional staffs will be in close contact with those State officials that are in or supervise State programs in the areas listed in this rule.

Comment: One commenter expressed concern that we are expanding hunting programs in the absence of adequate scientific data on the wildlife populations affected. Another commenter questioned if adequate funding levels are available to initiate the proposed hunts.

Response: The quote the commenter cited was from the Fulfilling the Promise: Serving Wildlife, Habtat and People through Effective Leadership (2nd draft, September 18, 1998) document, and the ''absence of adequate scientific data'' statement refers to wildlife disturbance issues, *i.e.,* non-consumptive uses such as developing new trails, etc. We do not expand our hunting programs without examining the ramifications on the affected wildlife populations. For example, in the case of migratory bird hunting, our primary responsibility in the annual promulgation of hunting regulations is to ensure the continued health of migratory game bird populations. This process involves consideration of extensive national and international survey results, technical advice from our staff and States in all major migration routes, and other public input in the development of reasonable and appropriate regulatory recommendations, such as seasons and bag limits, each year. More recently, we have used an adaptive approach to develop harvest regulations. This approach fosters a regulatory process in the United States that improves our ability to predict the impact regulations have on bird populations, maximizes harvest, and at the same time, conserves the migratory bird resource over the long term.

Funding is just one of the factors that we consider when applying sound professional judgment as part of determining compatibility for hunting programs.

Comment: A commenter felt that ''Because state regulations will govern all aspects of the hunting programs not covered by the Refuge-specific regulations, the rule will clearly transfer authority for managing federal lands to the states.''

Response: We disagree. We do not transfer authority to the States, but rather make a decision as to whether State regulations are sufficient for our management needs.

State regulations do not govern all aspects of our hunting programs, rather we work in partnership with the States. For example, with migratory bird hunting, the States step down Federal harvest and implementation regulations for establishing hunting seasons and bag limits. In turn, we evaluate State regulations based on local population surveys and adjust our hunting seasons and bag limits accordingly. When evaluating the State regulations, if we need provide no further restrictions, then we adopt regulations identical to the State regulations. On some refuges it may be necessary to supplement the State regulations with more restrictive Federal regulations to ensure that we meet our management responsibilities as outlined under the section entitled ''Statutory Authority'' in the rule.

Comment: A commenter offered some changes to the language in 50 CFR 32.24, California (affecting Colusa, Delevan, Sacramento, and Sutter National Wildlife Refuges) regarding the use of portable gas stoves. They suggest that we modify the language to say: ''No person will build or maintain fires, except in refuge parking lots and in portable gas stoves or other portable metal devices made specifically for burning.'' In the same section, they feel the public could interpret our prohibition of use of '' * * * bicycles and other conveyances'' to include wheelchairs and other devices necessary for the mobility impaired.

Response: The use of fires is largely inconsistent with the operation of public waterfowl hunting programs at national wildlife refuges and also in their associated confined parking lots. We believe that open fires in the parking lots are a camping-related activity. Overnight camping has been a major issue in the past at all four refuges, and we do not allow it. Authorizing the use of other portable metal devices made for burning (like barbeques or wood-

burning burn barrels) is not, in our opinion, consistent with the operation of this refuge waterfowl hunt program. The proposed regulation is simple, to the point, and consistent with the plain language mandate and the intent of the NWRSIA. We agree with the suggestion for clarification of the language dealing with improving access for the mobility impaired on System lands. The Service and the California Department of Fish and Game have developed and implemented ''Reasonable Accommodation Procedures for Mobility Impaired Hunters—Sacramento National Wildlife Refuge Complex,'' which allows access for mobility-impaired hunters. We will modify 50 CFR 32.24 for Colusa, Delevan, Sacramento, and Sutter National Wildlife Refuges in California to read as follows: ''We do not allow bicycles and other conveyances. Mobility-impaired hunters should consult with the Refuge Manager for allowed conveyances.''

Comment: A commenter asked if it is possible to open surf/bay fishing at Laguna Atascosa National Wildlife Refuge in Texas.

Response: At present, we prohibit fishing and/or fishing access on the existing refuge to avoid wildlife disturbance. Migratory ducks, shorebirds, and wading birds are the species targeted for protection by this closure. The threatened piping plover is one species of particular interest protected by this fishing closure. This closure includes all bank fishing access along the refuge's Laguna Madre shoreline. However, we do allow boat access for boat fishing and wade fishing. Other wetlands affected by this closure include the Laguna Atascosa Lake, the Cayo Atascoso (a stream that flows into and out of the lake), and the Arroyo Colorado (a public stream that flows through the refuge). Dolph Thomae Jr. County Park on the Arroyo Colorado allows pier fishing, boat launching, etc., for the public. We manage this county park as part of refuge lands under a written Memorandum of Understanding.

Comment: One commenter felt we did not afford the public a meaningful opportunity to comment on the proposal.

Response: We provided the public a 30-day period to comment on the August 11, 1999 proposed rule. The Refuge-Specific Hunting and Sport Fishing Regulations are an annual process with the proposed rule published each summer with 30-day comment period. There is nothing contained in this annual regulation outside of the scope of the annual review process where we add refuges or determine whether individual refuge regulations need modifications, deletions, or additions made to them. As we stated in the proposed rule, by allowing a 30-day comment period, we are trying to avoid jeopardizing the establishment of hunting and fishing programs this year (two of the six priority uses established by the NWRSIA) or shortening their duration. Many of these rules also relieve restrictions and allow the public to participate in recreational activities on a number of refuges. Even after issuance of a final rule we accept comments, suggestions and concerns for consideration for any appropriate subsequent rulemaking.

Effective Date

This rule is effective upon publication. We have determined that any further delay in implementing these refuge-specific hunting and sport fishing regulations would not be in the public interest in that a delay would hinder the effective planning and administration of the hunting and fishing programs. We provided a 30-day comment period for the August 11, 1999 proposed rule. An additional 30-day delay would jeopardize holding the hunting and/or fishing programs this year or shorten their duration and thereby lessen the management effectiveness of this regulation. Therefore, we find good cause under 5 U.S.C. 553(d) to make this rule effective upon publication.

Statutory Authority

The National Wildlife Refuge System Administration Act (NWRSAA) of 1966 as amended by the National Wildlife Refuge System Improvement Act of 1997 (16 U.S.C. 668dd–668ee) and the Refuge Recreation Act (RRA) of 1962 (16 U.S.C. 460k–460k–4), govern the administration and public use of national wildlife refuges.

The National Wildlife Refuge System Improvement Act (NWRSIA) is the latest amendment to the NWRSAA. It amends and builds upon the NWRSAA in a manner that provides an improved ''Organic Act'' for the Refuge System similar to those that exist for other public lands. It serves to ensure that we effectively manage the System as a national system of lands, waters, and interests for the protection and conservation of our nation's wildlife resources. The NWRSAA states first and foremost that we focus the mission of the System on conservation of fish, wildlife, and plant resources and their habitat. This Act requires the Secretary, before initiating or permitting a new use of a refuge, or before expanding, renewing, or extending an existing use of a refuge, to determine that the use is a compatible use and not inconsistent with public safety. The NWRSIA establishes as the policy of the United States that wildlife-dependent recreation, when it is compatible, is a legitimate and appropriate public use of the Refuge System, through which the American public can develop an appreciation for fish and wildlife. The NWRSIA establishes six compatible wildlife-dependent recreational uses as the priority general public uses of the Refuge System. Those priority uses are: hunting, fishing, wildlife observation, wildlife photography, environmental education, and interpretation.

The RRA authorizes the Secretary to administer areas within the System for public recreation as an appropriate incidental or secondary use only to the extent that it is practicable and not inconsistent with the primary purpose(s) for which we established the areas. This Act requires that any recreational use of refuge lands be compatible with the primary purposes for which we established the refuge and not inconsistent with other previously authorized operations.

The NWRSAA and RRA also authorize the Secretary to issue regulations to carry out the purposes of the Acts and regulate uses.

We develop hunting and sport fishing plans for each existing refuge prior to opening it to hunting or fishing. In many cases, we develop refuge-specific regulations to ensure the compatibility of the programs with the purposes for which we established the refuge. We have ensured initial compliance with the NWRSAA and the RRA for hunting and sport fishing on newly acquired refuges through an interim determination of compatibility made at the time of acquisition. This policy ensures that we make the determinations required by these acts prior to adding refuges to the lists of areas open to hunting and fishing in 50 CFR part 32. We ensure continued compliance by the development of Comprehensive Conservation Plans, long-term hunting and sport fishing plans, and by annual review of hunting and sport fishing programs and regulations.

In preparation for new openings, we include the following documents in the refuges' ''openings package'' for Regional review and approval from the Washington Office: an interim hunting and fishing management plan; a Section 7 determination pursuant to the Endangered Species Act that these openings will have no effect, or are not likely to have an adverse effect, on listed species or critical habitats; a letter

of concurrence from the affected State; interim compatibility determinations; and refuge-specific regulations to administer the hunting and/or fishing programs. Upon review of these documents, we have determined that the opening of these national wildlife refuges to hunting and fishing is compatible with the principles of sound fish and wildlife management and administration and otherwise will be in the public interest.

We allow the following wildlife-dependent recreational activities for the first time:

Hunting of migratory game birds:

- Currituck National Wildlife Refuge, North Carolina
- Julia Butler Hansen Refuge for the Columbian White-Tailed Deer, Oregon
- Plum Tree Island National Wildlife Refuge, Virginia

St. Croix Wetland Management District, Wisconsin

Big game hunting on:

- Bond Swamp National Wildlife Refuge, Georgia
- St. Croix Wetland Management District, Wisconsin

Upland game hunting on:

- St. Croix Wetland Management District, Wisconsin

Sport fishing on:

- Bond Swamp National Wildlife Refuge, Georgia
- J. Clark Salyer National Wildlife Refuge, North Dakota
- Tewaukon National Wildlife Refuge, North Dakota
- Stewart Lake National Wildlife Refuge, North Dakota
- Upper Souris National Wildlife Refuge, North Dakota
- Julia Butler Hansen Refuge for the Columbian White-Tailed Deer, Oregon
- Willapa National Wildlife Refuge, Oregon
- ACE Basin National Wildlife Refuge, South Carolina

In accordance with NWRSAA and the RRA, we have determined that these openings are compatible and consistent with the primary purposes for which we established the refuge.

Need for This Regulation

We are adding refuges to the list of areas open for hunting and/or sport fishing, along with pertinent refuge-specific regulations for such activities. We amend certain regulations for other refuges that pertain to migratory game bird hunting, upland game hunting, big game hunting, and sport fishing for the 1999–2000 season. On many refuges, our policy of adopting regulations identical to State regulations is adequate in meeting National Wildlife Refuge System objectives. On other refuges, it is necessary to supplement State regulations with more restrictive Federal regulations to ensure that we meet our management responsibilities, as outlined under the section entitled ''Statutory Authority'' in the rule. We issue refuge-specific regulations when opening a national wildlife refuge or modifying the various uses of a refuge, and for all hunting or sport fishing. These regulations list the prohibited uses, limited uses, and those activities that are available without restriction. They also list those wildlife species that you may hunt or fish for along with the respective seasons, bag limits, methods of hunting or fishing, descriptions of open areas, and other provisions as appropriate. We promulgate many of the amendments here to provide greater restriction and clarify the existing regulation language, which should result in fewer violations of refuge regulations.

Regulatory Planning and Review

This document is not a significant rule subject to Office of Management and Budget review under Executive Order 12866. See explanation under Regulatory Flexibility Act.

a. This rule will not have an annual economic effect of $100 million or adversely affect an economic sector, productivity, jobs, the environment, or other units of government. A cost-benefit and economic analysis is not required. This rule is administrative, legal, technical, and procedural in nature and makes minor modification to existing refuge public use programs. The rule will allow hunting on five refuges where we had prohibited hunting and allow fishing on eight refuges where we had prohibited that activity. We estimate that these changes will result in 11,900 additional visitor-hunting-days and 165,300 visitor-fishing-days. The appropriate measure for the net benefits of these changes is the additional net economic value experienced by the participants. The 1996 National Survey of Fishing, Hunting, and Wildlife-Associated Recreation measured net economic values by activity and region. Applying these estimates to the number of additional activity-days permitted by this rule yields an estimate of the national benefits from increased hunting of $160,000 and from increased fishing of $2.6 million. These estimates are below the threshold for a significant rule.

The addition of the term ''approved'' to the nontoxic shot regulations is for clarification purposes, and we do not expect it to affect hunters' behavior. It has no economic effects.

b. This rule will not create inconsistencies with other agencies' actions. We coordinate recreational use on national wildlife refuges with State governments as well as other Federal agencies having adjoining or overlapping jurisdiction before proposing regulations. The regulation is consistent with, and not less restrictive than, other agencies' rules.

c. This rule will not materially affect entitlements, grants, user fees, loan programs, or the rights and obligations of their recipients. The provisions of this rule only apply to persons involved in wildlife-dependent public use including regulated hunting and sport fishing on national wildlife refuges, which is a privilege and not a right. User fees will not change as a result of this rule.

d. This rule will not raise novel legal or policy issues. This rule continues the practice of requiring public use of refuges to be compatible with the primary purpose of the refuge.

Regulatory Flexibility Act

The Department of the Interior certifies that this rule will not have a significant economic effect on a substantial number of small entities such as businesses, organizations, and governmental jurisdictions in the area as defined under the Regulatory Flexibility Act (5 U.S.C. 601 *et seq.*). A final Regulatory Flexibility Analysis is not attached, and a Small Entity Compliance Guide is not required.

This rulemaking will not have a significant economic impact on a substantial number of small entities. Congress created the National Wildlife Refuge System to conserve fish, wildlife, and plants and their habitats. They facilitated this conservation mission by providing Americans opportunities to visit and participate in compatible wildlife-dependent recreation, including hunting, fishing, wildlife observation and photography, and environmental education and interpretation as priority public uses on national wildlife refuges and to better appreciate the value of, and need for, fish and wildlife conservation.

For most units within the National Wildlife Refuge System, this rule is administrative, legal, technical, and procedural in nature and provides for minor changes to the methods of hunting and fishing permitted but does not stop the overall use permitted. For most units, this rule will not change the number of visitors using refuges or their spending and, therefore, will have no impact on the local economies in their vicinity.

We open five units to hunting and eight units to fishing for the first time. Data from the 1996 National Survey of Fishing, Hunting, and Wildlife-Associated Recreation provides estimates of spending per day for each activity in each of our regions. Multiplying spending per activity day by the number of activity days expected at each unit yields an estimate of the total spending related to the regulation. As much of this spending would have occurred at other sites in the local region absent the regulation, this estimate does not represent increased economic activity but economic activity related to the new recreational opportunities. We estimate the additional hunting opportunities will result in 11,900 visitor-hunting-days on the newly opened units. This hunting will entail $302,000 in trip-related expenditures by hunters. We estimate the additional fishing opportunities will result in 165,300 visitor-fishing-days and $9.3 million in spending. Upper Souris National Wildlife Refuge and J. Clark Salyer National Wildlife Refuge account for 90,000 of the increased fishing days so we expect $5.4 million of the related spending in the Minot, North Dakota area. As small businesses are a significant portion of the sporting goods industry, much of this economic activity will flow to small entities. However, the rule will not have a significant economic effect on a substantial number of small entities as defined in the Act.

Small Business Regulatory Enforcement Fairness Act

This rule is not a major rule under 5 U.S.C. 804(2), the Small Business Regulatory Enforcement Fairness Act, as discussed in the Regulatory Planning and Review section above. This rule:

a. Does not have an annual effect on the economy of $100 million or more;

b. Will not cause a major increase in costs or prices for consumers, individual industries, Federal, State, or local government agencies, or geographic regions; or

c. Does not have significant adverse effects on competition, employment, investment, productivity, innovation, or the ability of U.S.-based enterprises to compete with foreign-based enterprises.

Unfunded Mandates Reform Act

Since this rule applies to public use of federally owned and managed refuges, it does not impose an unfunded mandate on State, local, or tribal governments or the private sector of more than $100 million per year. The rule does not have a significant or unique effect on State, local, or tribal governments or the private sector. A statement containing the information required by the Unfunded Mandates Reform Act (2 U.S.C. 1531 *et seq.*) is not required.

Takings (Executive Order 12630)

In accordance with Executive Order 12630, the rule does not have significant takings implications. This regulation will affect only visitors at national wildlife refuges and limit what they can do while they are on a refuge.

Federalism (Executive Order 13152)

As discussed in the Regulatory Planning and Review and Unfunded Mandates Act sections above, this rule does not have sufficient federalism implications to warrant the preparation of a Federalism Assessment under Executive Order 13152.

Civil Justice Reform (Executive Order 12988)

In accordance with Executive Order 12988, the Office of the Solicitor has determined that the rule does not unduly burden the judicial system and meets the requirements of sections 3(a) and 3(b)(2) of the Order. The regulation will clarify established regulations and result in better understanding of the regulations by refuge visitors.

Paperwork Reduction Act

This regulation does not contain any information collection requirements other than that already approved by the Office of Management and Budget under the Paperwork Reduction Act. See 50 CFR 25.23 for information concerning that approval.

Section 7 Consultation

In preparation for new openings, we include Section 7 consultation documents in the refuge's ''openings package'' for Regional review and approval from the Washington Office. We reviewed the changes in hunting and fishing herein with regard to Section 7 of the Endangered Species Act of 1973 (16 U.S.C. 1531–1543) and find the actions are not likely to adversely affect the continued existence of any endangered species or threatened species or result in the destruction or adverse modification of habitat of such species within the System since the rule is primarily administrative, legal, technical, or procedural in nature and/or makes minor modifications to existing public use programs. We comply with Section 7 of the Endangered Species Act of 1973 (16 U.S.C. 1531–1543) when developing Comprehensive Conservation Plans, management plans for public use of refuges, and prior to implementing any new or revised public recreation program on a refuge as identified in 50 CFR 26.32. We also make determinations required by the Endangered Species Act on a case-by-case basis before the addition of a refuge to the lists of areas open to hunting or fishing as contained in 50 CFR 32.7.

National Environmental Policy Act

We analyzed this rule in accordance with the criteria of the National Environmental Policy Act of 1969 (NEPA) (42 U.S.C. 4332(C)) and 318 DM 2.2(g) and 6.3(D). This rule does not constitute a major Federal action significantly affecting the quality of the human environment. An environmental impact statement/assessment is not required.

A categorical exclusion from NEPA documentation covers this amendment of refuge-specific hunting and fishing regulations since it is technical and procedural in nature, and the environmental effects are too broad, speculative, or conjectural to lend themselves to meaningful analysis (516 DM 2, Appendix 1.10).

Prior to the addition of a refuge to the list of areas open to hunting and fishing in 50 CFR part 32, we develop hunting and fishing plans for the affected refuges. We incorporate these proposed refuge hunting and fishing activities in the refuge Comprehensive Conservation Plans and/or step-down management plans, pursuant to our refuge planning guidance in 602 FW 1–3. We prepare these plans in compliance with section 102(2)(C) of NEPA, and the Council on Environmental Quality's regulations for implementing NEPA in 40 CFR parts 1500–1508. We invite the affected public to participate in the review, development, and implementation of these plans.

We have also prepared several related environmental analyses, such as lead shot vs. nontoxic shot as it relates to waterfowl and other wildlife with the most recent Environmental Assessment (EA) in May, 1998.

Available Information for Specific Refuges

Individual refuge headquarters retain information regarding public use programs and the conditions that apply to their specific programs and maps of their respective areas. You may also obtain information from the regional offices at the addresses listed below:

Region 1—California, Hawaii, Idaho, Nevada, Oregon, and Washington. Assistant Regional Director—Refuges and Wildlife, U.S. Fish and Wildlife Service, Eastside Federal Complex,

Suite 1692, 911 N.E. 11th Avenue, Portland, Oregon 97232–4181; Telephone (503) 231–6214.

Region 2—Arizona, New Mexico, Oklahoma, and Texas. Assistant Regional Director—Refuges and Wildlife, U.S. Fish and Wildlife Service, Box 1306, Albuquerque, New Mexico 87103; Telephone (505) 766–1829.

Region 3—Illinois, Indiana, Iowa, Michigan, Minnesota, Missouri, Ohio, and Wisconsin. Assistant Regional Director—Refuges and Wildlife, U.S. Fish and Wildlife Service, Federal Building, Fort Snelling, Twin Cities, Minnesota 55111; Telephone (612)–713–5300.

Region 4—Alabama, Arkansas, Florida, Georgia, Kentucky, Louisiana, Mississippi, North Carolina, Tennessee, South Carolina, Puerto Rico, and the Virgin Islands. Assistant Regional Director—Refuges and Wildlife, U.S. Fish and Wildlife Service, 1875 Century Boulevard, Room 324, Atlanta, Georgia 30345; Telephone (404) 679–7152.

Region 5—Connecticut, Delaware, District of Columbia, Maine, Maryland, Massachusetts, New Hampshire, New Jersey, New York, Pennsylvania, Rhode Island, Vermont, Virginia, and West Virginia. Assistant Regional Director—Refuges and Wildlife, U.S. Fish and Wildlife Service, 300 Westgate Center Drive, Hadley, Massachusetts 01035–9589; Telephone (413) 253–8550.

Region 6—Colorado, Kansas, Montana, Nebraska, North Dakota, South Dakota, Utah, and Wyoming. Assistant Regional Director—Refuges and Wildlife, U.S. Fish and Wildlife Service, Box 25486, Denver Federal Center, Denver, Colorado 80225; Telephone (303) 236–8145.

Region 7—Alaska. Assistant Regional Director—Refuges and Wildlife, U.S. Fish and Wildlife Service, 1011 E. Tudor Rd., Anchorage, Alaska 99503; Telephone (907) 786–3545.

Primary Author. Leslie A. Marler, Management Analyst, Division of Refuges, U.S. Fish and Wildlife Service, Washington, DC 20240, is the primary author of this rulemaking document.

List of Subjects in 50 CFR Part 32

Fishing, Hunting, Reporting and recordkeeping requirements, Wildlife, Wildlife refuges.

For the reasons set forth in the preamble, we amend title 50, chapter I, subchapter C of the Code of Federal Regulations as follows:

PART 32—[AMENDED]

1. By revising the authority citation for part 32 to read as follows:

Authority: 5 U.S.C. 301; 16 U.S.C. 460k, 664, 668dd–668ee, and 715i.

2. In § 32.2, by revising the section heading and paragraph (k) to read as follows:

§ 32.2 What are the general provisions regarding hunting on areas of the National Wildlife Refuge System?

* * * * *

(k) You may possess only approved nontoxic shot while in the field, which we identify in 50 CFR 20.21(j), while on Waterfowl Production Areas, or on certain other areas of the National Wildlife Refuge System as delineated on maps, leaflets and/or signs, available at each refuge headquarters or posted at each refuge, or as stated in refuge-specific regulations. Where we allow turkey and deer hunting, you may use slugs and shot containing lead to hunt these species unless prohibited by refuge-specific regulations and/or State law.

3. In § 32.7 by:

a. Revising the section heading and removing the listing of ''Cossatot National Wildlife Refuge'' and by alphabetically adding ''Pond Creek National Wildlife Refuge'' in the State of Arkansas;

b. Alphabetically adding the listing ''Bond Swamp National Wildlife Refuge'' in the State of Georgia;

c. Alphabetically adding the listing of ''Kilauea Point National Wildlife Refuge'' in the State of Hawaii;

d. Alphabetically adding the listing of ''Currituck National Wildlife Refuge'' in the State of North Carolina;

e. Alphabetically adding the listing of ''Stewart Lake National Wildlife Refuge'' in the State of North Dakota;

f. Removing the listing of ''Baskett Slough National Wildlife Refuge'' and by alphabetically adding the listing ''Julia Butler Hansen Refuge for the Columbian White-Tailed Deer'' in the State of Oregon;

g. Alphabetically adding the listing ''Plum Tree Island National Wildlife Refuge'' in the State of Virginia;

h. Alphabetically adding the listing ''St. Croix Wetland Management District'' in the State of Wisconsin;

i. Revising ''Pacific Island Territories'' to read ''United States Unincorporated Pacific Insular Possessions'' and removing the listing ''Guam National Wildlife Refuge;'' and

j. By alphabetically adding a new listing for ''Guam'' The revisions read as follows:

§ 32.7 What refuge units are open to hunting and/or fishing?

* * * * *

Guam

Guam National Wildlife Refuge.

* * * * *

4. In § 32.20 Alabama by revising Wheeler National Wildlife Refuge to read as follows:

§ 32.20 Alabama.

* * * * *

Wheeler National Wildlife Refuge

A. Hunting of Migratory Game Birds. [Reserved]

B. Upland Game Hunting. We allow hunting of quail, squirrel, rabbit, raccoon, and opossum on designated areas of the refuge subject to the following condition: We require permits.

C. Big Game Hunting. We allow hunting of white-tailed deer on designated areas of the refuge subject to the following condition: We require permits.

D. Sport Fishing. We allow fishing on designated areas of the refuge subject to the following conditions:

1. We do not allow bank fishing around the shoreline of the refuge headquarters.

2. All other refuge waters are open to fishing year-round unless otherwise posted.

3. We prohibit entry and use of airboats and hovercraft on all waters within the refuge boundaries.

4. We prohibit entry and use of inboard waterthrust boats, such as but not limited to personal watercraft, watercycles, and waterbikes on all waters of the refuge except that portion of the Tennessee River and Flint Creek from its mouth to mile-marker three.

5. You may not leave boats on the refuge overnight.

5. In § 32.22 Arizona by:

a. Revising Bill Williams River National Wildlife Refuge and Cibola National Wildlife Refuge;

b. Revising paragraphs A.3. and B.4. of Havasu National Wildlife Refuge; and

c. Revising paragraphs A.3. and B.2. of Imperial National Wildlife Refuge to read as follows:

§ 32.22 Arizona.

* * * * *

Bill Williams River National Wildlife Refuge

A. Hunting of Migratory Game Birds. We allow hunting of mourning and white-winged doves on designated areas of the refuge subject to the following condition: We allow only shotguns.

B. Upland Game Hunting. We allow hunting of quail and cottontail rabbit on designated areas of the refuge subject to the following conditions:

1. You may possess only approved nontoxic shot while in the field.
2. We allow only shotguns.
3. We allow hunting of cottontail rabbits from September 1 to the close of the State quail season.

C. Big Game Hunting. We allow hunting of desert bighorn sheep on designated areas of the refuge.

D. Sport Fishing. We allow sport fishing in designated areas.

* * * * *

Cibola National Wildlife Refuge

A. Hunting of Migratory Game Birds. We allow hunting of geese, ducks, coots, moorhens, common snipe, mourning and white-winged dove on designated areas of the refuge subject to the following conditions:

1. We allow only shotguns.
2. Waterfowl and snipe hunters may possess only approved nontoxic shot while in the field.
3. You must pay a hunt fee in portions of the refuge. Consult refuge hunting leaflet for locations.
4. We do not allow pit or permanent blinds.
5. Hunting in Farm Unit 2 closes at 12:00 p.m. each day. Consult refuge hunting leaflet for refuge-specific regulations and location.
6. We close Farm Unit 2 to all hunting except waterfowl hunting during the Arizona waterfowl season.
7. You must remove all temporary blinds, boats, and decoys from the refuge following each day's hunt.
8. We do not allow hunting within 50 yards (45 m) of any public road.
9. The Hart Mine Marsh area is open to hunting from 10:00 a.m. to 3:00 p.m. daily during goose season.
10. The area known as Pretty Water is open to waterfowl hunting from ½ hour before sunrise to 3:00 p.m. during the Arizona and California waterfowl hunting seasons.

B. Upland Game Hunting. We allow hunting of quail and cottontail rabbit on designated areas of the refuge subject to the following conditions:

1. We allow only shotguns and bows and arrows.
2. You may possess only approved nontoxic shot while in the field.
3. You may hunt cottontail rabbit from September 1 through the last day of the respective State's quail season.
4. During the Arizona waterfowl season, you may not hunt quail and rabbit in Farm Unit 2.
5. You may not hunt within 50 yards (45 m) of any public road.

C. Big Game Hunting. We allow hunting of mule deer on designated areas of the refuge subject to the following conditions:

1. During the Arizona waterfowl season, you may not hunt mule deer in Farm Unit 2.
2. You may not hunt within 50 yards (45 m) of any public road.

D. Sport Fishing. We allow sport fishing and frogging subject to the following condition: Cibola Lake is open to fishing and frogging from March 15 through Labor Day.

Havasu National Wildlife Refuge

A. Hunting of Migratory Game Birds. * * *

* * * * *

3. You may possess only approved nontoxic shot while in the field.

* * * * *

B. Upland Game Hunting. * * *

* * * * *

4. You may possess only approved nontoxic shot while in the field.

* * * * *

Imperial National Wildlife Refuge

A. Hunting of Migratory Game Birds. * * *

* * * * *

3. You may possess only approved nontoxic shot while in the field.

B. Upland Game Hunting. * * *

* * * * *

2. We require approved nontoxic shot for hunting quail and cottontail rabbit.

* * * * *

§ 32.23 [Amended]

6. In § 32.23 Arkansas by revising the name of ''Cossatot National Wildlife Refuge'' to read ''Pond Creek National Wildlife Refuge'' and by placing it in alphabetical order.

7. In § 32.24 California by:

a. Revising paragraph A.2. of Clear Lake National Wildlife Refuge;

b. Revising the introductory text of paragraphs A. and B., revising paragraph A.1., adding paragraph A.4., redesignating paragraphs B.2. and B.3. as B.3. and B.4. and designating the undesignated paragraph following paragraph B.1. as B.2., revising paragraphs B.2., and B.3., and adding paragraph B.5. of Colusa National Wildlife Refuge;

c. Revising Delevan National Wildlife Refuge;

d. Revising paragraph D. of Humboldt Bay National Wildlife Refuge;

e. Revising paragraph B.2. of Kern National Wildlife Refuge;

f. Revising Lower Klamath National Wildlife Refuge;

g. Revising paragraph A. of Merced National Wildlife Refuge;

h. Revising paragraph A.4. and paragraph B. of Modoc National Wildlife Refuge;

i. Revising paragraphs A. and B. of Sacramento National Wildlife Refuge;

j. Revising paragraph A., the introductory text of paragraph B, and paragraphs B.1. and D. of San Luis National Wildlife Refuge;

k. Revising paragraphs A. and B. of Sutter National Wildlife Refuge; and

l. Revising paragraphs A. and B. of Tule Lake National Wildlife Refuge to read as follows:

§ 32.24 California.

* * * * *

Clear Lake National Wildlife Refuge

A. Hunting of Migratory Game Birds. * * *

* * * * *

2. You may possess only approved nontoxic shot while in the field.

* * * * *

Colusa National Wildlife Refuge

A. Hunting of Migratory Game Birds. We allow hunting of geese, ducks, coots, moorhens, and snipe on designated areas of the refuges subject to the following conditions:

1. You may possess only approved nontoxic shot while in the field.

* * * * *

4. No person may build or maintain fires, except in portable gas stoves.

B. *Upland Game Hunting.* We allow hunting of pheasant on designated areas of the refuge subject to the following conditions:

* * * * *

2. We do not allow bicycles and other conveyances. Mobility-impaired hunters should consult with the Refuge Manager for allowed conveyances.
3. You may possess only approved nontoxic shot while in the field.

* * * * *

5. No person may build or maintain fires, except in portable gas stoves.

* * * * *

Delevan National Wildlife Refuge

A. Hunting of Migratory Game Birds. We allow hunting of geese, ducks, coots, moorhens, and snipe on designated areas of the refuge subject to the following conditions:

1. You must unload firearms while transporting them between parking areas and spaced blind areas.
2. We do not allow snipe hunting in the spaced blind areas.
3. We restrict hunters assigned to the spaced blind area to within 100 feet (30

m) of their assigned hunt site except for retrieving downed birds, placing decoys, or traveling to and from the area.

4. Access to the hunt area is by foot traffic only. We do not allow bicycles and other conveyances. Mobility-impaired hunters should consult with the Refuge Manager for allowed conveyances.

5. You may possess no more than 25 shells while in the field.

6. You may possess only approved nontoxic shot while in the field.

7. No person may build or maintain fires, except in portable gas stoves.

B. Upland Game Hunting. We allow hunting of pheasant only in the free-roam areas on the refuge subject to the following conditions:

1. We do not allow pheasant hunting in the spaced blind area except during a special 1-day-only pheasant hunt on the first Monday after the opening of the State pheasant hunting season.

2. You may possess only approved nontoxic shot while in the field.

3. Access to the hunt area is by foot traffic only. We do not allow bicycles and other conveyances. Mobility-impaired hunters should consult with the Refuge Manager for allowed conveyances.

4. You may possess no more than 25 shells while in the field.

5. No person may build or maintain fires, except in portable gas stoves.

C. Big Game Hunting. [Reserved]

D. Sport Fishing. We allow fishing during daylight hours only from February 15 through October 1.

* * * * *

Humboldt Bay National Wildlife Refuge

* * * * *

D. Sport Fishing. We allow fishing on designated areas of the refuge subject to the following conditions:

1. We allow fishing from the designated shoreline train along Hookton Slough during daylight hours only.

2. We allow fishermen to use only pole and line or rod and reel from the Hookton Slough Shoreline trail fishing area.

3. We do not allow either motorized boats or motors on the refuge dock on Humboldt Bay. We close the dock on Humboldt Bay to launching of all boats from November 1 through January 15.

* * * * *

Kern National Wildlife Refuge

* * * * *

B. Upland Game Hunting. * * *

2. You may possess only approved nontoxic shot while in the field.

* * * * *

Lower Klamath National Wildlife Refuge

A. Hunting of Migratory Game Birds. We allow hunting of geese, ducks, coots, moorhens, and snipe on designated areas of the refuge subject to the following conditions:

1. In the controlled waterfowl hunting area, we require entry permits for the first 2 days of the waterfowl season for all hunters 16 years of age or older. An adult with a permit must accompany hunters under the age of 16 hunting in the controlled area. We require advance reservations for the first 2 days of the hunt.

2. Shooting hours end at l:00 p.m. daily on the California portion of the refuge except that the refuge manager may designate up to six 1-day special youth or disabled hunter hunts per season and up to 3 days per week of general waterfowl hunting starting December 1 after 1:00 p.m.

3. You may carry only unloaded firearms on hunter access routes open to motor vehicles or when taking them through posted retrieving zones when traveling to and from the hunting areas.

4. You may not set decoys in retrieving zones.

5. We do not allow air-thrust and inboard waterthrust boats.

6. You may possess only approved nontoxic shot while in the field.

7. You may use only nonmotorized boats and boats with electric motors on units 4b and 4c from the start of the hunting season through November 30. You may use motorized boats on units 4b and 4c from December 1 through the end of hunting season.

B. Upland Game Hunting. We allow hunting of pheasant on designated areas of the refuge subject to the following conditions:

1. You may possess only approved nontoxic shot while in the field.

2. You may carry only unloaded firearms on hunter access routes open to motor vehicles or when taking them through posted retrieving zones when traveling to and from the hunting areas.

C. Big Game Hunting. [Reserved]

D. Sport Fishing. [Reserved]

Merced National Wildlife Refuge

A. Hunting of Migratory Game Birds. We allow hunting of geese, ducks, coots, and moorhens on designated areas of the refuge subject to the following conditions and as we may otherwise post in the refuge regulations:

1. You must unload firearms while transporting them between parking areas and blind sites.

2. You may not possess more than 25 shells when leaving your assigned parking lot.

3. You may possess only approved nontoxic shot while in the field.

4. We restrict hunters assigned to the spaced blind unit to their assigned blind except for retrieving downed birds, placing decoys, or traveling to and from the parking area.

* * * * *

Modoc National Wildlife Refuge

A. Hunting of Migratory Game Birds. * * *

* * * * *

4. You may possess only approved nontoxic shot while in the field.

* * * * *

B. Upland Game Hunting. We allow hunting of pheasant on designated areas of the refuge subject to the following conditions:

1. We limit hunting to junior hunters possessing a valid Junior Hunting License and refuge permit.

2. You may possess only approved nontoxic shot while in the field.

* * * * *

Sacramento National Wildlife Refuge

A. Hunting of Migratory Game Birds. We allow hunting of geese, ducks, coots, moorhens, and snipe on designated areas of the refuge subject to the following conditions:

1. You must unload firearms while transporting them between parking areas and spaced blind areas.

2. We do not allow snipe hunting in the spaced blind area.

3. We restrict hunters assigned to the spaced blind unit to within 100 feet (30 m) of their assigned hunt site except for retrieving downed birds, placing decoys, or traveling to and from the parking area.

4. You may possess only approved nontoxic shot while in the field.

5. You may possess no more than 25 shells while in the field.

6. Access to the hunt area is by foot traffic only. We do not allow bicycles and other conveyances. Mobility-impaired hunters should consult with the Refuge Manager for allowed conveyances.

7. No person may build or maintain fires, except in portable gas stoves.

B. Upland Game Hunting. We allow hunting of pheasant on designated areas of the refuge subject to the following conditions:

1. We do not allow pheasant hunting in the spaced blind area except during a special 1-day-only pheasant hunt on the first Monday after the opening of the State pheasant hunting season.

2. You may possess only approved nontoxic shot while in the field.

3. Access to the hunt area is by foot traffic only. We do not allow bicycles

and other conveyances. Mobility-impaired hunters should consult with the Refuge Manager for allowed conveyances.

4. You may not possess more than 25 shells while in the field.

5. No person may build or maintain fires, except in portable gas stoves.

* * * * *

San Luis National Wildlife Refuge

A. Hunting of Migratory Game Birds. We allow hunting of geese, ducks, coots, moorhens, and snipe on designated areas of the refuge subject to the following conditions and as we may otherwise post in the refuge regulations:

1. In the free-roam hunting areas, you may use only portable blinds, temporary blinds constructed of natural materials, and on the San Luis Unit, existing concrete barrel blinds. We prohibit the cutting of woody vegetation.

2. You must remove all portable blinds, decoys, and other personal equipment from the refuge following each day's hunt.

3. You may snipe hunt only within the free-roam portion of the San Luis unit's waterfowl hunting areas.

4. You may possess only approved nontoxic shot while in the field.

5. You may possess no more than 25 shells after leaving your assigned parking lot or boat launch.

6. Vehicles may stop only at designated, assigned parking areas. We prohibit dropping of passengers or equipment or stopping between designated parking areas. You must return your permits to the check stations immediately upon completion of your hunt, and prior to using any tour routes or leaving the refuge vicinity.

7. You may not transport loaded firearms while walking or bicycling between parking areas in spaced blind units, or while traveling in a boat under power.

8. We restrict hunters in the spaced blind area to their assigned blind except when they are placing decoys, traveling to and from the parking area, retrieving downed birds, or when shooting to retrieve cripples.

9. Access to the Frietas Unit free-roam hunting area is by boat only with a maximum of 5 mph. Prohibited boats include air-thrust and/or inboard water-thrust types.

10. We prohibit the use of motorized boats in the free-roam units with the exception of the Frietas Unit.

B. Upland Game Hunting. We allow hunting of pheasants on designated areas of the refuge subject to the following conditions or as we otherwise may post in refuge regulations available at visitor information centers and refuge headquarters:

1. You may possess only approved nontoxic shot while in the field.

* * * * *

D. Sport Fishing. We allow fishing on designated areas of the refuge subject to the following conditions and as we may otherwise post in the refuge regulations:

1. We allow fishing from sunrise to sunset only, except on that portion of the San Joaquin River's south (left descending) bank within the West Bear Creek Unit designated as open for fishing 24 hours per day, or as otherwise posted in refuge regulations.

2. We allow the use of one pole and line or one rod and reel per person. Fishermen must attend at all times any pole and line or rod and reel they are using for fishing.

3. We prohibit the use of any boat, float tube, or other floating aid/device.

* * * * *

Sutter National Wildlife Refuge

A. Hunting of Migratory Game Birds. We allow hunting of geese, ducks, coots, moorhens, and snipe on designated areas of the refuge subject to the following conditions:

1. You may possess only approved nontoxic shot while in the field.

2. You may possess no more than 25 shells while in the field.

3. Access to the hunt area is by foot traffic only. We do not allow bicycles and other conveyances. Mobility-impaired hunters should consult with the Refuge Manager for allowed conveyances.

4. No person may build or maintain fires, except in portable gas stoves.

B. Upland Game Hunting. We allow hunting of pheasant on designated areas of the refuge subject to the following conditions:

1. You may possess only approved nontoxic shot while in the field.

2. Access is by foot traffic only. We do not allow bicycles and other conveyances. Mobility-impaired hunters should consult with the Refuge Manager for allowed conveyances.

3. You may possess no more than 25 shells while in the field.

4. No person may build or maintain fires, except in portable gas stoves.

* * * * *

Tule Lake National Wildlife Refuge

A. Hunting of Migratory Game Birds. We allow hunting of geese, ducks, coots, moorhens, and snipe on designated areas of the refuge subject to the following conditions:

1. We require entry permits in the controlled waterfowl hunting area for the first 2 days of the waterfowl season for all hunters 16 years of age or older. An adult with a permit must accompany hunters under the age of 16 hunting in the controlled area. We require advance reservation for the first 2 days of the hunt.

2. Shooting hours end at 1:00 p.m. daily on the California portion of the refuge except that the refuge manager may designate up to six 1-day special youth or disabled hunter hunts per season and up to 3 days per week of general waterfowl hunting after 1:00 p.m. starting December 1.

3. We do not allow possession of any loaded firearms more than 200 feet (60 m) from the established blind stakes. You select blind sites by lottery at the beginning of each hunt day. You may shoot only from within your assigned blind site.

4. You may carry only unloaded firearms on hunter access routes open to motor vehicles or when taking them through posted retrieving zones when traveling to and from the hunting areas.

5. We do not allow you to set decoys in retrieving zones.

6. We do not allow air-thrust and inboard waterthrust boats.

7. You may possess only approved nontoxic shot while in the field.

B. Upland Game Hunting. We allow hunting of pheasant on designated areas of the refuge subject to the following conditions:

1. You may possess only approved nontoxic shot while in the field.

2. You may carry only unloaded firearms on hunter access routes open to motor vehicles or when taking them through posted retrieving zones when traveling to and from the hunting areas.

* * * * *

8. In § 32.25 Colorado by revising paragraph B. of Arapaho National Wildlife Refuge to read as follows:

§ 32.25 Colorado.

* * * * *

Arapaho National Wildlife Refuge

* * * * *

B. Upland Game Hunting. We allow upland game hunting on designated areas of the refuge pursuant to State law and subject to the following condition: You may possess only approved nontoxic shot while in the field.

* * * * *

9. In § 32.27 Delaware by:

a. Revising paragraph B. of Bombay Hook National Wildlife Refuge; and

b. Revising paragraph B.4. of Prime Hook National Wildlife Refuge to read as follows:

§ 32.27 Delaware.

* * * * *

Bombay Hook National Wildlife Refuge

* * * * *

B. Upland Game Hunting. We allow hunting of upland game on designated areas of the refuge subject to the following conditions:

1. We allow hunting only on the South Upland Hunting Area.

2. We allow hunting from ½ hour before sunrise to ½ hour after sunset.

3. We do not allow hunting from March 1 through August 31.

4. Shotgun hunters may possess only approved nontoxic shot while in the field.

* * * * *

Prime Hook National Wildlife Refuge

* * * * *

B. Upland Game Hunting. * * *

* * * * *

4. Shotgun hunters may possess only approved nontoxic shot while in the field.

* * * * *

10. In § 32.28 Florida by:

a. Revising Chassahowitzka National Wildlife Refuge;

b. Revising paragraphs C. and D. of Lake Woodruff National Wildlife Refuge;

c. Revising paragraphs A., B., C., and D.9. and adding paragraph D.10. of St. Marks National Wildlife Refuge; and

d. Revising paragraphs B., C., and D. of St. Vincent National Wildlife Refuge to read as follows:

§ 32.28 Florida.

* * * * *

Chassahowitzka National Wildlife Refuge

A. Hunting of Migratory Game Birds. We allow hunting of ducks and coots on designated areas of the refuge subject to the following condition: We require permits.

B. Upland Game Hunting. We allow hunting of quail, squirrel, rabbit, and armadillo on designated areas of the refuge subject to the following condition: We require permits.

C. Big Game Hunting. We allow hunting of white-tailed deer and feral hogs on designated areas of the refuge subject to the following condition: We require permits.

D. Sport Fishing. We allow sport fishing on the refuge year round. Creel limits/seasons are in accordance with State regulations.

* * * * *

Lake Woodruff National Wildlife Refuge

* * * * *

C. Big Game Hunting. We allow hunting of white-tailed deer and feral hogs on designated areas of the refuge subject to the following condition: We require permits.

D. Sport Fishing. Sport fishing will be in accordance with State regulations and is subject to the following conditions:

1. We allow fishing only from sunrise to sunset.

2. We do not allow use of airboats in the refuge.

3. We do not allow commercial fishing or the taking of frogs or turtles.

4. We do not allow the use of snatch hooks in the refuge impoundments.

* * * * *

St. Marks National Wildlife Refuge

A. Hunting of Migratory Game Birds. We allow hunting of ducks and coots in designated areas of the refuge subject to the following condition: We require permits.

B. Upland Game Hunting. We allow hunting of squirrel, rabbit, and raccoon on designated areas of the refuge subject to the following condition: We require permits.

C. *Big Game Hunting.* We allow hunting of white-tailed deer, turkeys, and feral hogs on designated areas of the refuge subject to the following condition: We require permits.

D. Sport Fishing. * * *

* * * * *

9. We prohibit crabbing in refuge pools and impoundments along Lighthouse Road.

10. We do not allow launching of airboats or inboard waterthrust boats (personal watercraft) from refuge saltwater boat ramps at Wakulla Beach or the Lighthouse Road area.

St. Vincent National Wildlife Refuge

* * * * *

B. *Upland Game Hunting.* [Reserved]

C. *Big Game Hunting.* We allow hunting of white-tailed deer, sambar deer, and feral hogs on designated areas of the refuge subject to the following condition: We require permits.

D. *Sport Fishing.* We allow fishing on designated areas of the refuge subject to the following conditions:

1. We allow fishing only from sunrise to sunset.

2. We allow only nonmotorized boats and boats with electric motors.

3. We do not allow the use of live minnows as bait.

4. We allow fishing in Lakes 1 and 2 and Oyster Pond from April 1 through September 30.

5. We allow fishing in Lakes 3, 4, and 5 from May 15 through September 30.

* * * * *

11. In § 32.29 Georgia by:

a. Alphabetically adding Bond Swamp National Wildlife Refuge;

b. Revising paragraphs C. and D. of Okefenokee National Wildlife Refuge; and

c. Revising paragraphs B. and C., the introductory text of paragraph D., and paragraph D.3. of Savannah National Wildlife Refuge to read as follows:

§ 32.29 Georgia.

* * * * *

Bond Swamp National Wildlife Refuge

A. Hunting of Migratory Game Birds. [Reserved]

B. Upland Game Hunting. [Reserved]

C. Big Game Hunting. We allow hunting of white-tailed deer and feral hogs on designated areas of the refuge subject to the following condition: We require permits.

D. Sport Fishing. We allow fishing on designated areas of the refuge subject to the following conditions:

1. We allow fishing from March 15 to October 15 except on the Ocmulgee River, which is open to fishing year-round.

2. We allow fishing only from sunrise to sunset.

3. We allow fishing only with pole and line or rod and reel.

4. We prohibit the taking of sturgeon, frogs, turtles, and mollusks.

5. We allow only nonmotorized boats or boats with electric motors on refuge waters except the Ocmulgee River.

6. You may not leave boats or other personal equipment on the refuge overnight.

7. The minimum size limit for largemouth bass is 14 inches (35 cm)

* * * * *

Okefenokee National Wildlife Refuge

* * * * *

C. Big Game Hunting. We allow hunting of white-tailed deer and feral hogs on designated areas of the refuge subject to the following condition: We require permits except for on Cowhouse Island. We open Cowhouse Island to white-tailed deer and feral hog hunting per Dixon Memorial State Forest Regulations.

D. Sport Fishing. We allow fishing on designated areas of the refuge subject to the following conditions:

1. We do not allow the use of boats with motors larger than 10 horsepower.

2. We do not allow the use of live minnows as bait.

3. We allow only the use of pole and line or rod and reel.

4. The daily creel limit is 5 largemouth bass, 5 channel catfish, and 25 of any one, or combination, of bream or sunfish. We do not allow the possession of more than the daily creel limit.

5. We do not allow the taking of largemouth bass smaller than 14 inches (35 cm).

* * * * *

Savannah National Wildlife Refuge

* * * * *

B. Upland Game Hunting. We allow hunting of squirrels and feral hogs on designated areas of the refuge subject to the following condition: We require permits.

C. Big Game Hunting. We allow hunting of white-tailed deer, turkey, and feral hogs on designated areas of the refuge subject to the following condition: We require permits.

D. Sport Fishing. We allow fishing on designated areas of the refuge subject to the following conditions:

* * * * *

3. We allow fishing from sunrise to sunset.

* * * * *

12. In § 32.30 Hawaii by:

a. Revising paragraph C.1. of Hakalau Forest National Wildlife Refuge; and

b. Alphabetically adding Kilauea Point National Wildlife Refuge to read as follows:

§ 32.30 Hawaii.

* * * * *

Hakalau Forest National Wildlife Refuge

* * * * *

C. Big Game Hunting. * * *

1. You must have reservations or permits to access the refuge.

* * * * *

Kilauea Point National Wildlife Refuge

A. Hunting of Migratory Game Birds. [Reserved]

B. Upland Game Hunting. [Reserved]

C. Big Game Hunting. [Reserved]

D. Sport Fishing. Anglers may salt water fish in designated areas of the refuge.

13. In § 32.31 Idaho by:

a. Revising paragraph A.2. of Bear Lake National Wildlife Refuge;

b. Revising paragraphs A. and B. of Camas National Wildlife Refuge;

c. Revising paragraphs A.3. and B.4. of Deer Flat National Wildlife Refuge; and

d. Revising paragraph B.2. of Minidoka National Wildlife Refuge to read as follows:

§ 32.31 Idaho.

* * * * *

Bear Lake National Wildlife Refuge

A. Hunting of Migratory Game Birds. * * *

* * * * *

2. You may possess only approved nontoxic shot while in the field.

* * * * *

Camas National Wildlife Refuge

A. Hunting of Migratory Game Birds. We allow hunting of geese, ducks, coots, and snipe on designated areas of the refuge subject to the following condition: You may possess only approved nontoxic shot while in the field.

B. Upland Game Hunting. We allow hunting of pheasant and grouse on designated areas of the refuge subject to the following condition: Pheasant hunters may possess only approved nontoxic shot while in the field.

* * * * *

Deer Flat National Wildlife Refuge

A. Hunting of Migratory Game Birds. * * *

* * * * *

3. Waterfowl and snipe hunters may possess only approved nontoxic shot while in the field.

* * * * *

B. Upland Game Hunting. * * *

* * * * *

4. Pheasant, quail, and partridge hunters may possess only approved nontoxic shot while in the field.

* * * * *

Minidoka National Wildlife Refuge

* * * * *

B. Upland Game Hunting. * * *

* * * * *

2. Pheasant hunters may possess only approved nontoxic shot while in the field.

* * * * *

14. In § 32.32 Illinois by:

a. Revising paragraphs A.3., A.4., B.3., C.2., C.3., C.4., D.1., and D.7. and removing paragraph D.8. of Crab Orchard National Wildlife Refuge;

b. Revising paragraph B. and the introductory text of paragraph C. of Cypress Creek National Wildlife Refuge;

c. Revising paragraph B.1. of Mark Twain National Wildlife Refuge; and

d. Revising paragraph A., the introductory text of paragraph B., and paragraphs B.3. and B.4., adding paragraph B.5., and revising the introductory text of paragraph C., and paragraphs C.3., C.4., C.5. and D. of Upper Mississippi National Wildlife and Fish Refuge to read as follows:

§ 32.32 Illinois.

* * * * *

Crab Orchard National Wildlife Refuge

A. Hunting of Migratory Game Birds. * * *

* * * * *

3. Goose hunters outside the controlled goose hunting area on Crab Orchard Lake must hunt from a blind that is on shore or anchored a minimum of 200 yards (180 m) away from any shoreline. Waterfowl hunters may also hunt on the east shoreline in Grassy Bay.

4. You may possess only approved nontoxic shot while hunting migratory game bird species.

B. Upland Game Hunting. * * *

* * * * *

3. You may possess only approved nontoxic shot while hunting all permitted species except wild turkey. You may possess and use lead shot for hunting wild turkey.

C. Big Game Hunting. * * *

* * * * *

2. We require hunters using the closed area to check in at the refuge visitor contact station prior to hunting and to comply with the special rules provided to them.

3. You may not hunt deer with a firearm in the controlled goose hunting areas. You may hunt deer in the controlled goose hunting areas with archery equipment in accordance with State seasons and regulations.

4. You must remove hunting stands at the end of each day's hunt.

* * * * *

D. Sport Fishing. * * *

1. Crab Orchard Lake—west of Wolf Creek Road—Anglers may fish from boats all year. Anglers must remove trotlines/jugs from sunrise until sunset from Memorial Day through Labor Day; east of Wolf Creek Road, anglers may fish from boats March 15 through September 30. Anglers may fish all year at the Wolf Creek and Route 148 causeway areas. Anglers must check and remove fish from all jugs and trotlines daily. It is illegal to use stakes to anchor any trotlines; anglers must tag them with their name and address. Anglers may use all noncommercial fishing methods except they may not use any underwater breathing apparatus. Anglers may not use jugs or trotlines with any flotation device that has previously contained any petroleum-

based materials or toxic substances. Anglers must attach a buoyed device that is visible on the water's surface to all trotlines.

* * * * *

7. We restrict motorboats to slow speeds leaving no wakes in Cambria Neck, and within 150 feet (45 m) of any shoreline, swimming area, marina entrance, boat ramp, or causeway tunnel on Crab Orchard, Little Grassy, or Devils Kitchen Lakes.

Cypress Creek National Wildlife Refuge

* * * * *

B. Upland Game Hunting. You may hunt bob-white quail, rabbit, squirrel, raccoon, opossum, coyote, red fox, grey fox, and turkey (spring) on designated areas of the refuge in accordance with posted regulations and subject to the following conditions:

1. If we provide hunter check-in/check-out post, you must present daily harvests.

2. We do not allow hunting after sunset.

3. You may possess only approved nontoxic shot while hunting for any permitted birds except wild turkey. You may use lead shot while hunting wild turkey.

C. Big Game Hunting. We allow hunting of white-tailed deer on designated areas of the refuge in accordance with posted regulations and subject to the following conditions:

* * * * *

Mark Twain National Wildlife Refuge

* * * * *

B. Upland Game Hunting. * * *

1. You may possess only approved nontoxic shot while hunting all permitted birds, except wild turkeys. You may possess and use lead shot for hunting wild turkey.

* * * * *

Upper Mississippi National Wildlife and Fish Refuge

A. Hunting of Migratory Game Birds. We allow hunting of migratory game birds on designated areas of the refuge subject to the following conditions:

1. You may not hunt migratory birds on refuge-closed areas posted ''Area Closed,'' on the Goose Island ''No Hunting'' zone in Pool 8, on the Upper Halfway Creek Marsh ''No Hunting'' zone in Pool 7, or on the Frog Pond area ''No Hunting'' zone in Pool 13.

2. We require permits for Potters Marsh in Pool 13 except during the early teal season.

3. You may possess only approved nontoxic shot while in the field.

4. On Pools 4 through 11 you must remove all decoys from the refuge at the end of each day's hunt.

B. Upland Game Hunting. We allow hunting of upland game on designated areas of the refuge subject to the following conditions:

* * * * *

3. You may not hunt at any time on the Goose Island ''No Hunting'' zone in Pool 8, on the Upper Halfway Creek Marsh ''No Hunting'' zone in Pool 7, or on the Frog Pond ''No Hunting'' zone in Pool 13.

4. Shotgun hunters may possess only approved nontoxic shot when hunting for any permitted birds or other small game, except wild turkey. We still allow possession of lead shot for hunting wild turkey.

5. You may use lights and dogs to hunt raccoons, and other specifically authorized small mammals, in accordance with State regulations. We allow such use of lights on the refuge at the point of kill only. We prohibit all other uses of lights for hunting on the refuge.

C. Big Game Hunting. We allow hunting of white-tailed deer on designated areas of the refuge subject to the following conditions:

* * * * *

3. You may not hunt at any time on the Goose Island ''No Hunting'' zone in Pool 8, on the Upper Halfway Creek Marsh ''No Hunting'' zone in Pool 7, or on the Frog Pond ''No Hunting'' zone in Pool 13.

4. We do not allow construction or use of permanent blinds, platforms, or ladders.

5. You must remove all stands from the refuge at the end of each day's hunt.

D. Sport Fishing. We allow fishing on designated areas of the refuge subject to the following conditions:

1. We do not allow fishing on the Spring Lake Closed Area, Carroll County, Illinois from October 1 through the last day of the Illinois waterfowl season.

2. We allow only hand-powered boats or boats with electric motors on Mertes' Slough in Buffalo County, Wisconsin.

15. In § 32.34 Iowa by revising paragraph B. of Union Slough National Wildlife Refuge to read as follows:

§ 32.34 Iowa.

* * * * *

Union Slough National Wildlife Refuge

* * * * *

B. Upland Game Hunting. You may hunt upland game in designated areas of the refuge subject to the following condition: You may possess only approved nontoxic shot while hunting upland game, except wild turkey. You may possess and use lead shot for wild turkey hunting.

* * * * *

16. In § 32.35 Kansas by:

a. Revising paragraph B.2. of Flint Hills National Wildlife Refuge;

b. Revising paragraph A. of Kirwin National Wildlife Refuge; and

c. Revising paragraph A. of Quivira National Wildlife Refuge to read as follows:

§ 32.35 Kansas.

* * * * *

Flint Hills National Wildlife Refuge

* * * * *

B. Upland Game Hunting. * * *

2. You may possess only approved nontoxic shot or rimfire firearms while in the field.

* * * * *

Kirwin National Wildlife Refuge

A. Hunting of Migratory Game Birds. We allow hunting of geese, ducks, coots, mourning doves, and snipe on designated areas of the refuge subject to the following condition: Waterfowl and coot hunters may possess only approved nontoxic shot while in the field.

* * * * *

Quivira National Wildlife Refuge

A. Hunting of Migratory Game Birds. We allow hunting of geese, ducks, coots, rails (Virginia and Sora only), mourning doves, and common snipe on designated areas of the refuge subject to the following condition: We require approved nontoxic shot when hunting any game on the refuge. We prohibit the possession of lead shot in the field.

* * * * *

17. In § 32.36 Kentucky by revising Ohio River Islands National Wildlife Refuge to read as follows:

§ 32.36 Kentucky.

* * * * *

Ohio River Islands National Wildlife Refuge

Refer to § 32.68 West Virginia for regulations.

* * * * *

18. In § 32.37 Louisiana by:

a. Revising paragraphs B. and C., the introductory text of paragraph D., and paragraphs D.1. and D.2. of Catahoula National Wildlife Refuge;

b. Revising D'Arbonne National Wildlife Refuge;

c. Revising paragraph D.2. and removing paragraphs D.3. and D.4. of Grand Cote National Wildlife Refuge;

d. Revising Lake Ophelia National Wildlife Refuge;

e. Revising the introductory text of paragraph A., paragraph A.1., and paragraph D. of Sabine National Wildlife Refuge; and

f. Revising Upper Ouachita National Wildlife Refuge to read as follows:

§ 32.37 Louisiana.

* * * * *

Catahoula National Wildlife Refuge

* * * * *

B. *Upland Game Hunting.* We allow hunting of raccoon, squirrel, rabbit, and feral hogs on designated areas of the refuge subject to the following condition: We require permits.

C. *Big Game Hunting.* We allow hunting of white-tailed deer and feral hogs on designated areas of the refuge subject to the following condition: We require permits.

D. *Sport Fishing.* We allow fishing on designated areas of the refuge subject to the following conditions:

1. We allow fishing from 1 hour before sunrise until ½ hour after sunset. We allow only pole and line or rod and reel fishing. We prohibit snagging.

2. We allow boat launching on all refuge waters as designated in the refuge brochure. We allow only nonmotorized boats or boats with motors of 10 horsepower or less. You may not leave boats on the refuge overnight.

* * * * *

D'Arbonne National Wildlife Refuge

A. *Hunting of Migratory Game Birds.* We allow hunting of ducks, geese, coots, and woodcock on designated areas of the refuge subject to the following condition: We require permits.

B. *Upland Game Hunting.* We allow hunting of quail, squirrel, rabbit, raccoon, and opossum on designated areas of the refuge subject to the following condition: We require permits.

C. *Big Game Hunting.* We allow hunting of white-tailed deer on designated areas of the refuge subject to the following condition: We require permits.

D. *Sport Fishing.* We allow fishing on designated areas of the refuge subject to the following conditions:

1. The ends of trotlines must consist of a length of cotton line that extends from the points of attachment into the water.

2. We allow only cotton limb lines.

* * * * *

Grand Cote National Wildlife Refuge

* * * * *

D. *Sport Fishing.* * * *

* * * * *

2. Any person entering, using, or occupying the refuge for fishing or crawfishing must abide by all terms and conditions in the refuge fishing brochure.

* * * * *

Lake Ophelia National Wildlife Refuge

A. *Hunting of Migratory Game Birds.* You may hunt duck, coots, woodcock, and snipe on designated areas of the refuge subject to the following conditions:

1. We require permits.

2. Any person entering, using, or occupying the refuge for hunting must abide by all terms and conditions in the refuge hunting brochure.

B. *Upland Game Hunting.* We allow hunting of squirrel, rabbit, and raccoon on designated areas of the refuge subject to the following conditions:

1. We require permits.

2. Any person entering, using, or occupying the refuge for hunting must abide by all terms and conditions in the refuge hunting brochure.

C. *Big Game Hunting.* We allow hunting of white-tailed deer on designated areas of the refuge subject to the following conditions:

1. We require permits.

2. Any person entering, using, or occupying the refuge for hunting must abide by all terms and conditions in the refuge hunting brochure.

D. *Sport Fishing.* We allow fishing in designated areas of the refuge subject to the following conditions:

1. We require permits.

2. Any person entering, using, or occupying the refuge for fishing must abide by all terms and conditions in the refuge fishing brochure.

* * * * *

Sabine National Wildlife Refuge

A. *Hunting of Migratory Game Birds.* We allow hunting of geese, ducks, and coots on designated areas of the refuge subject to the following conditions:

1. We require refuge hunting permits.

* * * * *

D. *Sport Fishing.* We allow fishing, crabbing, and shrimp cast netting on designated areas of the refuge subject to the following condition: Any person entering, using, or occupying the refuge must abide by all terms and conditions set forth in the refuge fishing brochure.

* * * * *

Upper Ouachita National Wildlife Refuge

A. *Hunting of Migratory Game Birds.* We allow hunting of ducks, geese, coots, and woodcock on designated areas of the refuge subject to the following condition: We require permits.

B. *Upland Game Hunting.* We allow hunting of quail, squirrel, rabbit, raccoon, opossum, beaver, and coyotes on designated areas of the refuge subject to the following condition: We require permits.

C. *Big Game Hunting.* We allow hunting of white-tailed deer and feral hogs on designated areas of the refuge subject to the following condition: We require permits.

D. *Sport Fishing.* We allow fishing on designated areas of the refuge subject to the following conditions:

1. The ends of trotlines must consist of a length of cotton line that extends from the points of attachment into the water.

2. We allow only cotton limb lines.

19. In § 32.38 Maine by:

a. Revising paragraph B.3. and adding paragraph C.5. of Rachel Carson National Wildlife Refuge; and

b. Revising paragraph B. of Sunkhaze Meadows National Wildlife Refuge to read as follows:

§ 32.38 Maine.

* * * * *

Rachel Carson National Wildlife Refuge

* * * * *

B. *Upland Game Hunting.* * * *

* * * * *

3. You may possess only approved nontoxic shot while in the field.

C. *Big Game Hunting.* * * *

* * * * *

5. We allow only archery and shotgun hunting with appropriate buckshot or slug loads.

* * * * *

Sunkhaze Meadows National Wildlife Refuge

* * * * *

B. *Upland Game Hunting.* We allow hunting of upland game on designated areas of the refuge subject to the following condition: Shotgun hunters may possess only approved nontoxic shot while in the field.

* * * * *

20. In § 32.39 Maryland by:

a. Revising paragraph D. of Eastern Neck National Wildlife Refuge; and

b. Revising paragraph B.6. of Patuxent Research Refuge to read as follows:

§ 32.39 Maryland.

* * * * *

Eastern Neck National Wildlife Refuge

* * * * *

D. *Sport Fishing.* We allow fishing and crabbing in designated areas of the

refuge in accordance with State regulations and subject to the following conditions:

1. We allow fishing and crabbing from Eastern Neck Island bridge.

2. We allow fishing and crabbing from April 1—September 30 during daylight hours only at the Ingleside Recreation Area.

3. We allow fishing from the Boxes Point and Duck Inn Trails during daylight hours only.

Patuxent Research Refuge

* * * * *

B. Upland Game Hunting. * * *

* * * * *

6. Shotgun hunters may possess only approved nontoxic shot while in the field.

* * * * *

21. In § 32.40 Massachusetts by revising paragraph B.3. of Oxbow National Wildlife Refuge to read as follows:

§ 32.40 Massachusetts.

* * * * *

Oxbow National Wildlife Refuge

* * * * *

B. Upland Game Hunting. * * *

* * * * *

3. You may possess only approved nontoxic shot while in the field.

* * * * *

22. In § 32.42 Minnesota by:

a. Revising paragraph B.1. of Big Stone National Wildlife Refuge;

b. Revising paragraph B.2. of Minnesota Valley National Wildlife Refuge;

c. Revising paragraphs A.1. and B.1. of Rice Lake National Wildlife Refuge;

d. Revising paragraphs A.5. and B.1. of Sherburne National Wildlife Refuge; and

e. Revising paragraph B.3. of Tamarac National Wildlife Refuge to read as follows:

§ 32.42 Minnesota.

* * * * *

Big Stone National Wildlife Refuge

* * * * *

B. Upland Game Hunting. * * *

1. You may possess only approved nontoxic shot while hunting for partridge or ring-necked pheasant.

* * * * *

Minnesota Valley National Wildlife Refuge

* * * * *

B. Upland Game Hunting. * * *

* * * * *

2. You may possess only approved nontoxic shot while in the field.

* * * * *

Rice Lake National Wildlife Refuge

A. Hunting of Migratory Game Birds. * * *

1. Shotgun hunters may possess only approved nontoxic shot while in the field.

B. Upland Game Hunting. * * *

1. Shotgun hunters may possess only approved nontoxic shot while hunting upland game species.

* * * * *

Sherburne National Wildlife Refuge

A. Hunting of Migratory Game Birds. * * *

* * * * *

5. Shotgun hunters may possess only approved nontoxic shot while in the field.

B. Upland Game Hunting. * * *

1. Shotgun hunters may possess only approved nontoxic shot while hunting for all upland game species.

* * * * *

Tamarac National Wildlife Refuge

* * * * *

B. Upland Game Hunting. * * *

* * * * *

3. Shotgun hunters may possess only approved nontoxic shot while hunting for all upland game species.

* * * * *

23. In § 32.43 Mississippi by:

a. Revising Dahomey National Wildlife Refuge;

b. Revising St. Catherine Creek National Wildlife Refuge; and

c. Revising Tallahatchie National Wildlife Refuge to read as follows:

§ 32.43 Mississippi.

* * * * *

Dahomey National Wildlife Refuge

A. Hunting of Migratory Game Birds. We allow hunting of mourning doves, migratory waterfowl, coots, snipe, and woodcock on designated areas of the refuge subject to the following condition: We require permits.

B. Upland Game Hunting. We allow hunting of quail, squirrel, rabbit, beaver, raccoon, coyotes, and opossum on designated areas of the refuge subject to the following condition: We require permits.

C. Big Game Hunting. We allow hunting of deer, turkey, and feral hogs on designated areas of the refuge subject to the following condition: We require permits.

D. Sport Fishing. We allow sport fishing on designated areas of the refuge subject to the following condition: We require permits.

* * * * *

St. Catherine Creek National Wildlife Refuge

A. Hunting of Migratory Game Birds. We allow hunting of ducks, geese, and coots on designated areas of the refuge subject to the following condition: We require permits.

B. Upland Game Hunting. We allow hunting of squirrel, rabbit, beaver, nutria, muskrat, feral hogs, raccoon, coyotes, and opossum on designated areas of the refuge subject to the following condition: We require permits.

C. Big Game Hunting. We allow hunting of white-tailed deer and turkey on designated areas of the refuge subject to the following condition: We require permits.

D. Sport Fishing. We allow sport fishing on designated areas of the refuge subject to the following condition: We require permits.

Tallahatchie National Wildlife Refuge

A. Hunting of Migratory Game Birds. We allow hunting of mourning doves, migratory waterfowl, coots, snipe, and woodcock on designated areas of the refuge subject to the following condition: We require permits.

B. Upland Game Hunting. We allow hunting of quail, squirrel, rabbit, beaver, raccoon, coyotes, and opossum on designated areas of the refuge subject to the following condition: We require permits.

C. Big Game Hunting. We allow hunting of deer, turkey, and feral hogs on designated areas of the refuge subject to the following condition: We require permits.

D. Sport Fishing. We allow sport fishing on designated areas of the refuge subject to the following condition: We require permits.

* * * * *

24. In § 32.44 Missouri by revising paragraph A.2. of Swan Lake National Wildlife Refuge to read as follows:

§ 32.44 Missouri.

* * * * *

Swan Lake National Wildlife Refuge

A. Hunting of Migratory Game Birds. * * *

* * * * *

2. You may possess only approved nontoxic shot while in the field.

* * * * *

25. In § 32.45 Montana by:

a. Revising paragraph B. of Black Coulee National Wildlife Refuge;

b. Revising paragraph B.3. of Bowdoin National Wildlife Refuge;

c. Revising paragraph B.1. of Hailstone National Wildlife Refuge;

d. Revising paragraph B. of Lake Mason National Wildlife Refuge;

e. Revising paragraph A. of Red Rock Lakes National Wildlife Refuge;

f. Revising paragraph A. of Swan River National Wildlife Refuge; and

g. Revising paragraph B. of War Horse National Wildlife Refuge to read as follows:

§ 32.45 Montana.

* * * * *

Black Coulee National Wildlife Refuge

* * * * *

B. Upland Game Hunting. We allow hunting of upland game on designated areas of the refuge subject to the following condition: You may possess only approved nontoxic shot while in the field.

* * * * *

Bowdoin National Wildlife Refuge

* * * * *

B. Upland Game Hunting. * * *

* * * * *

3. You may possess only approved nontoxic shot while in the field.

* * * * *

Hailstone National Wildlife Refuge

* * * * *

B. Upland Game Hunting. * * *

1. You may possess only approved nontoxic shot while in the field.

* * * * *

Lake Mason National Wildlife Refuge

* * * * *

B. Upland Game Hunting. We allow hunting of upland game on designated areas of the refuge subject to the following condition: You may possess only approved nontoxic shot while in the field.

* * * * *

Red Rock Lakes National Wildlife Refuge

A. Hunting of Migratory Game Birds. We allow hunting of geese, ducks, and coots on designated areas of the refuge subject to the following condition: Waterfowl and coot hunters may possess only approved nontoxic shot while in the field.

* * * * *

Swan River National Wildlife Refuge

A. Hunting of Migratory Game Birds. We allow hunting of geese, ducks, and coots on designated areas of the refuge subject to the following condition: Waterfowl and coot hunters may possess only approved nontoxic shot while in the field.

* * * * *

War Horse National Wildlife Refuge

* * * * *

B. Upland Game Hunting. We allow hunting of upland game birds on designated areas of the refuge subject to the following condition: You may possess only approved nontoxic shot while in the field.

* * * * *

26. In § 32.47 Nevada by:

a. Revising paragraphs A. and D. of Ruby Lake National Wildlife Refuge; and

b. Revising paragraphs A.1., B., C., and D. of Sheldon National Wildlife Refuge to read as follows:

§ 32.47 Nevada.

* * * * *

Ruby Lake National Wildlife Refuge

A. Hunting of Migratory Game Birds. We allow hunting of geese, ducks, coots, moorhens, and snipe on designated areas of the refuge in accordance with State law and subject to the following conditions:

1. We do not allow off-road vehicles on the refuge.

2. We do not allow permanent and pit blinds. You must remove all blind materials and decoys at the end of each hunting day.

* * * * *

D. Sport Fishing. We allow fishing on designated areas of the refuge subject to State law and the following conditions:

1. We allow fishing from 1 hour before sunrise until 2 hours after sunset.

2. We allow fishing only on the dikes in the areas north of the Brown Dike and east of the Collection Ditch with the exception that you may fish by wading and from personal flotation devices (float tubes) on Unit 21.

3. We prohibit fishing from the bank on the South Marsh except at Brown Dike, the Main Boat Landing, and Narciss Boat Landing.

4. You may use only artificial lures in the Collection Ditch and spring ponds adjoining the ditch.

5. We do not allow boats on the refuge from January 1 through June 14.

6. During the boating season, we allow only boats on the South Marsh. Beginning June 15 through July 31, we allow only motorless boats or boats with battery-powered electric motors. Beginning August 1 through December 31, we allow only motorless boats and boats propelled with motors with a total of 10 horsepower or less.

7. Launch boats only from designated landings.

8. Do not store boats of any kind on the refuge from January 1 through May 31.

9. We do not allow off-road vehicles on the refuge.

Sheldon National Wildlife Refuge

A. Hunting of Migratory Game Birds. * * *

1. Waterfowl and coot hunters may possess only approved nontoxic shot while in the field.

* * * * *

B. Upland Game Hunting. We allow hunting of quail, grouse, and partridge on designated areas of the refuge.

C. Big Game Hunting. We allow hunting of deer, pronghorn, and bighorn sheep on designated areas of the refuge.

D. Sport Fishing. We allow fishing on designated areas of the refuge subject to the following conditions:

1. Anglers may only bank fish, fish by wading, or use boats with electric motors, float tubes or similar flotation devices in Big Springs Reservoir, Duferrena Ponds, and Catnip Reservoir. Anglers may not fish from other types of motorized boats.

2. We allow only individuals 12 years of age or under, or 65 years of age or older, or disabled individuals to fish in McGee Pond.

* * * * *

27. In § 32.48 by revising New Hampshire to read as follows:

§ 32.48 New Hampshire.

We have opened the following refuge unit to hunting and/or fishing with applicable refuge-specific regulations:

Great Bay National Wildlife Refuge

A. Hunting of Migratory Game Birds. We allow hunting of migratory game birds on designated areas of the refuge subject to the following conditions:

1. Waterfowl hunting will not require a permit. We will allow hunting only from the immediate shoreline of the Bay.

2. We allow only portable blinds. You must remove all decoys, blinds, and boats after each day's hunt.

3. Waterfowl hunters may access shorelines by boat only.

B. Upland Game Hunting. [Reserved]

C. Big Game Hunting. We allow hunting of deer on designated areas of the refuge subject to the following conditions:

1. We require refuge permits for the deer hunt.

2. We require big game hunters to wear in a conspicuous manner on the head, chest, and back, a minimum of

400 square inches (2600 cm^2) of solid-colored blaze-orange clothing or material.

3. We allow only shotguns and bows.

D. Sport Fishing. [Reserved]

28. In § 32.49 New Jersey by:

a. Revising paragraph A.4. of Cape May National Wildlife Refuge;

b. Revising paragraph A.7. of Edwin B. Forsythe National Wildlife Refuge;

c. Revising paragraph C. of Great Swamp National Wildlife Refuge;

d. Revising paragraph A.5. of Supawna Meadows National Wildlife Refuge; and

e. Revising paragraph A.3. of Wallkill River National Wildlife Refuge to read as follows:

§ 32.49 New Jersey.

* * * * *

Cape May National Wildlife Refuge

A. Hunting of Migratory Game Birds. * * *

* * * * *

4. You may possess only approved nontoxic shot while in the field.

* * * * *

Edwin B. Forsythe National Wildlife Refuge

A. Hunting of Migratory Game Birds. * * *

* * * * *

7. Shotgun hunters may possess only approved nontoxic shot while in the field.

* * * * *

Great Swamp National Wildlife Refuge

* * * * *

C. Big Game Hunting. We allow hunting of deer on designated areas of the refuge subject to the following conditions: Hunters must comply with State laws governing special deer permit hunts.

* * * * *

Supawna Meadows National Wildlife Refuge

A. Hunting of Migratory Game Birds. * * *

* * * * *

5. You may possess only approved nontoxic shot while in the field.

* * * * *

Wallkill River National Wildlife Refuge

A. Hunting of Migratory Game Birds. * * *

* * * * *

3. Shotgun hunters may possess only approved nontoxic shot while in the field.

* * * * *

29. In § 32.50 New Mexico by:

a. Revising paragraphs A.2. and B.1. of Bitter Lake National Wildlife Refuge;

b. Revising paragraphs A. and B.2. of Bosque Del Apache National Wildlife Refuge; and

c. Revising paragraph A.2. of Las Vegas National Wildlife Refuge to read as follows:

§ 32.50 New Mexico.

* * * * *

Bitter Lake National Wildlife Refuge

A. Hunting of Migratory Game Birds. * * *

* * * * *

2. You may possess only approved nontoxic shot while in the field.

* * * * *

B. Upland Game Hunting. * * *

1. You may possess only approved nontoxic shot while in the field.

* * * * *

Bosque Del Apache National Wildlife Refuge

A. Hunting of Migratory Game Birds. We allow hunting of mourning and white-winged doves on designated areas of the refuge subject to the following condition: You may possess only approved nontoxic shot while in the field.

B. Upland Game Hunting. * * *

* * * * *

2. You may possess only approved nontoxic shot while in the field.

* * * * *

Las Vegas National Wildlife Refuge

A. Hunting of Migratory Game Birds. * * *

* * * * *

2. You may possess only approved nontoxic shot while in the field.

* * * * *

30. In § 32.51 New York by revising paragraphs A.4. and B.4. and adding paragraph A.8. of Iroquois National Wildlife Refuge to read as follows:

§ 32.51 New York.

* * * * *

Iroquois National Wildlife Refuge

A. Hunting of Migratory Game Birds. * * *

* * * * *

4. Waterfowl hunters may not possess more than 20 shells per day.

* * * * *

8. You may possess only approved nontoxic shot while in the field.

B. Hunting of Upland Game. * * *

* * * * *

4. Shotgun hunters may possess only approved nontoxic shot while in the field.

* * * * *

31. In § 32.52 North Carolina by:

a. Revising paragraph A.1. of Cedar Island National Wildlife Refuge;

b. Alphabetically adding Currituck National Wildlife Refuge;

c. Revising paragraph A., adding paragraph C.2., and revising paragraph D. of Mattamuskeet National Wildlife Refuge;

d. Revising paragraphs A., B., and C. of Pocosin Lakes National Wildlife Refuge;

e. Revising paragraph A.2. of Roanoke River National Wildlife Refuge; and

f. Revising paragraph A.1. of Swanquarter National Wildlife Refuge to read as follows:

§ 32.52 North Carolina.

* * * * *

Cedar Island National Wildlife Refuge

A. Hunting of Migratory Game Birds. * * *

1. You may possess only approved nontoxic shot while in the field..

* * * * *

Currituck National Wildlife Refuge

A. Hunting of Migratory Game Birds. We allow hunting of swans, geese, ducks, and coots on designated areas of the refuge subject to the following conditions:

1. We require permits.

2. Hunting must be from assigned blind location.

3. We allow hunting on Wednesdays and Saturdays during the North Carolina waterfowl season.

4. We allow hunting from ½ hour before sunrise to 1 p.m.

5. We allow access 1½ hours before legal shooting time, and all parties must be off the refuge by 3 p.m.

B. Upland Game Hunting. [Reserved]

C. Big Game Hunting. [Reserved]

D. Sport Fishing. [Reserved]

* * * * *

Mattamuskeet National Wildlife Refuge

A. Hunting of Migratory Game Birds. We allow hunting of swans, geese, ducks, and coots on designated areas of the refuge subject to the following conditions:

1. We require permits.

2. We allow taking of Canada geese only during the special September season for resident Canada geese.

3. Any person entering, using, or occupying the refuge for hunting must abide by all the terms and conditions in the refuge hunting brochure.

* * * * *

C. Big Game Hunting. * * *

* * * * *

2. Any person entering, using, or occupying the refuge for hunting must abide by all the terms and conditions in the refuge hunting brochure.

D. Sport Fishing. We allow fishing and crabbing on designated areas of the refuge subject to the following conditions:

1. We allow fishing and crabbing from March 1 through November 1 from ½ hour before sunrise to ½ hour after sunset or as posted.

2. We allow bank fishing and crabbing year-round along Highway 94 Causeway and in the immediate vicinity of the Lake Landing water control structure, the Rose Bay water control structure, and the Outfall Canal water control structure. Other areas open to this activity are the Central Canal and East and West Main Canal as signed. We allow bank fishing and crabbing from ½ hour before sunrise to ½ hour after sunset except that the Highway 94 Causeway is open to fishing and crabbing 24 hours per day.

3. You may not dip herring (alewife).

4. You must attend all fish lines and crabbing equipment. We restrict crabbing equipment to 5 handlines and/or hand-activated traps per person. The catch/possession limit is 12 blue crabs per day per person.

5. We do not permit airboats, sailboats, wind surfers, and personal watercraft.

6. We prohibit bank fishing along the entrance road from Highway 94 to the Refuge Headquarters.

* * * * *

Pocosin Lakes National Wildlife Refuge

A. Hunting of Migratory Game Birds. We allow hunting of ducks, snow geese, swans, doves, woodcock, rails, and snipe on designated areas of the refuge subject to the following conditions:

1. We allow access 1½ hours before and after legal shooting time.

2. You must unload and encase firearms while transporting them by vehicle or boat under power.

3. We allow only portable blinds and temporary blinds constructed of natural materials. We require removal of portable blinds following each day's hunt.

4. We allow hunting during the State season.

B. Upland Game Hunting. We allow hunting of quail, squirrel, raccoon, opossum, rabbit, and fox on designated areas of the refuge subject to the following conditions:

1. We require permits for any night hunting.

2. We allow access 1½ hours before and after legal shooting time.

3. You must unload and encase firearms while transporting them by a vehicle or boat under power.

4. We allow hunting during the State season except we will close opossum and raccoon hunting during the State bear season including 5 days before and after that season.

5. You must wear 500 square inches (3250 cm^2) of fluorescent orange material above the waist, visible from all directions.

6. We prohibit possession of buckshot or slugs while hunting with dogs.

7. You may use only shotguns and/or .22 caliber rim-fire rifles for upland game hunts.

8. You may possess only approved nontoxic shot while in the field on designated areas of the refuge.

C. Big Game Hunting. We allow hunting of white-tailed deer on designated areas of the refuge subject to the following conditions:

1. You must wear 500 square inches (3250 cm^2) of fluorescent orange material above the waist visible from all directions during the muzzle loading and gun seasons.

2. We allow only shotguns, muzzle-loaders, and bow and arrow for big game hunts.

3. You must unload and encase firearms while transporting them by a vehicle or boat under power.

4. We allow access 1½ hours before and after legal shooting time.

5. We allow hunting during the State season.

6. We do not allow dogs.

7. You must remove all stands from the refuge following each day's hunt. We prohibit the construction or use of permanent stands, blinds, platforms, or ladders.

8. We allow archery hunting on the Pungo Unit during the regular State archery season and from November 1 through 30. State bag limits apply.

9. We allow shotgun and muzzle-loaders on the Pungo Unit subject to the following conditions:

We require permits and allow access 1 hour before and after legal shooting time.

* * * * *

Roanoke River National Wildlife Refuge

A. Hunting of Migratory Game Birds. * * *

* * * * *

2. You may possess only approved nontoxic shot while in the field.

* * * * *

Swanquarter National Wildlife Refuge

A. Hunting of Migratory Game Birds. * * *

1. You may possess only approved nontoxic shot while in the field.

* * * * *

32. In § 32.53 North Dakota by:

a. Revising paragraph B.2. of Arrowwood National Wildlife Refuge;

b. Revising paragraphs B., C., and D. of Audubon National Wildlife Refuge;

c. Revising paragraph B.1., redesignating paragraphs B.2. and B.3. as paragraphs B.3. and B.4., and adding a new paragraph B.2. of Des Lacs National Wildlife Refuge;

d. Revising J. Clark Salyer National Wildlife Refuge;

e. Revising paragraphs A.2. and B. of Lake Alice National Wildlife Refuge;

f. Revising paragraph D. of Lake Ilo National Wildlife Refuge;

g. Revising paragraph C. of Lake Nettie National Wildlife Refuge;

h. Revising paragraph B.1. of Lake Zahl National Wildlife Refuge;

i. Revising paragraph B.1. of Long Lake National Wildlife Refuge;

j. Revising paragraph B.3. of Lostwood National Wildlife Refuge;

k. Alphabetically adding Stewart Lake National Wildlife Refuge;

l. Revising paragraphs B., C., and D. of Tewaukon National Wildlife Refuge; and

m. Revising paragraphs B., C., and D. of Upper Souris National Wildlife Refuge to read as follows:

§ 32.53 North Dakota.

* * * * *

Arrowwood National Wildlife Refuge

* * * * *

B. Upland Game Hunting. * * *

* * * * *

2. You may possess only approved nontoxic shot while in the field.

* * * * *

Audubon National Wildlife Refuge

* * * * *

B. Upland Game Hunting. We allow hunting of ring-necked pheasant, gray partridge, and sharp-tailed grouse on designated areas of the refuge subject to State regulations with refuge restrictions as posted.

C. Big Game Hunting. We allow hunting of white-tailed and mule deer on designated areas of the refuge subject to State regulations with refuge restrictions as posted.

D. Sport Fishing. We allow ice fishing on designated areas of the refuge subject to State regulations with refuge restrictions as posted.

* * * * *

Des Lacs National Wildlife Refuge

* * * * *

B. Upland Game Hunting. * * *

1. You may possess only approved nontoxic shot while in the field.

2. You may use falconry for upland game hunting.

* * * * *

J. Clark Salyer National Wildlife Refuge

A. Hunting of Migratory Game Birds. We allow hunting of geese, ducks, and coots on designated areas of the refuge.

B. Upland Game Hunting. We allow hunting of pheasant, partridge, grouse, turkey, and fox on designated areas of the refuge subject to the following conditions:

1. Fox hunting opens annually on the day following the close of the regular firearm deer season and closes on March 31.

2. We close fox hunting from ½ hour after sunset until ½ hour before sunrise.

3. You may possess only approved nontoxic shot while in the field.

C. Big Game Hunting. We allow hunting of white-tailed deer on designated areas of the refuge subject to the following condition: We require permits.

D. Sport Fishing. We allow sport fishing on designated areas of the refuge as per State law with certain restrictions as posted.

Lake Alice National Wildlife Refuge

A. Hunting of Migratory Game Birds. * * *

* * * * *

2. Waterfowl and coot hunters may possess only approved nontoxic shot while in the field.

B. Upland Game Hunting. We allow hunting of upland game and fox on designated areas of the refuge subject to the following condition: You may possess only approved nontoxic shot while in the field.

* * * * *

Lake Ilo National Wildlife Refuge

* * * * *

D. Sport Fishing. We allow sport fishing on designated areas of the refuge subject to State regulations with refuge restrictions as posted.

Lake Nettie National Wildlife Refuge

* * * * *

C. Big Game Hunting. We allow hunting of white-tailed and mule deer on designated areas of the refuge subject to State regulations with refuge restrictions as posted.

* * * * *

Lake Zahl National Wildlife Refuge

* * * * *

B. Upland Game Hunting. * * *

1. You may possess only approved nontoxic shot while in the field.

* * * * *

Long Lake National Wildlife Refuge

* * * * *

B. Upland Game Hunting. * * *

1. You may possess only approved nontoxic shot while in the field.

* * * * *

Lostwood National Wildlife Refuge

* * * * *

B. Upland Game Hunting. * * *

* * * * *

3. You may possess only approved nontoxic shot while in the field.

* * * * *

Stewart Lake National Wildlife Refuge

A. Hunting of Migratory Game Birds. [Reserved]

B. Upland Game Hunting. [Reserved]

C. Big Game Hunting. [Reserved]

D. Sport Fishing. We allow fishing on the designated area subject to all State regulations.

Tewaukon National Wildlife Refuge

* * * * *

B. Updland Game Hunting. We allow hunting of ring-necked pheasants on designated areas of the refuge as per State law with certain restrictions as posted.

C. Big Game Hunting. We allow hunting of white-tailed deer on designated areas of the refuge as per State law with certain restrictions as posted.

D. Sport Fishing. We allow sport fishing on designated areas of the refuge as per State law with certain restrictions as posted.

Upper Souris National Wildlife Refuge

* * * * *

B. Upland Game Hunting. We allow hunting of upland game birds with approved nontoxic shot on designated areas of the refuge as per State law with certain restrictions as posted.

C. Big Game Hunting. We allow hunting of deer on designated areas of the refuge as per State law with certain restrictions as posted.

D. Sport Fishing. We allow fishing on designated areas of the refuge as per State law with certain restrictions as posted.

33. In § 32.54 Ohio by revising Ottawa National Wildlife Refuge to read as follows:

§ 32.54 Ohio.

* * * * *

Ottawa National Wildlife Refuge

A. Hunting of Migratory Game Birds. We allow hunting of geese and ducks on designated areas of the refuge subject to the following conditions:

1. We require permits.

2. You may possess only approved nontoxic shot while in the field.

B. Upland Game Hunting. [Reserved]

C. Big Game Hunting. We allow hunting of white-tailed deer on designated areas of the refuge subject to the following conditions:

1. We require permits.

2. You must check in and out of the refuge each day that you hunt.

3. You may not shoot from refuge roads.

D. Sport Fishing. We allow sport fishing on designated areas of the refuge subject to the following conditions:

1. We allow fishing during daylight hours only and during designated dates.

2. We do not allow boats or flotation devices.

34. In § 32.55 Oklahoma by:

a. Revising paragraph B.3. of Deep Fork National Wildlife Refuge;

b. Revising paragraph B.4. of Little River National Wildlife Refuge;

c. Revising paragraphs A.1. and B.1. of Salt Plains National Wildlife Refuge;

d. Revising paragraphs A.2. and B.2. of Sequoyah National Wildlife Refuge;

e. Revising paragraph A.3. of Tishomingo National Wildlife Refuge; and

f. Revising paragraphs A., B.1., D.1., and D.3. of Washita National Wildlife Refuge to read as follows:

§ 32.55 Oklahoma.

* * * * *

Deep Fork National Wildlife Refuge

* * * * *

B. Upland Game Hunting. * * *

* * * * *

3. You may use only shotguns with #4 or smaller shot. You may possess only approved nontoxic shot while in the field.

* * * * *

Little River National Wildlife Refuge

* * * * *

B. Upland Game Hunting. * * *

* * * * *

4. You may possess only approved nontoxic shot while in the field.

* * * * *

Salt Plains National Wildlife Refuge

A. Hunting of Migratory Game Birds. * * *

1. You may possess only approved nontoxic shot while in the field.

* * * * *

B. Upland Game Hunting. * * *

1. You may possess only approved nontoxic shot while in the field.

* * * * *

Sequoyah National Wildlife Refuge

A. Hunting of Migratory Game Birds. * * *

* * * * *

2. You may possess only approved nontoxic shot while in the field.

* * * * *

B. Upland Game Hunting. * * *

* * * * *

2. You may possess only approved nontoxic shot while in the field.

* * * * *

Tishomingo National Wildlife Refuge

A. Hunting of Migratory Game Birds. * * *

* * * * *

3. You may possess only approved nontoxic shot while in the field.

* * * * *

Washita National Wildlife Refuge

A. Hunting of Migratory Game Birds. We allow hunting of geese and sandhill cranes on designated areas of the refuge subject to the following conditions: We require permits and payment of a fee.

B. Upland Game Hunting. * * *

1. We only allow shotguns.

* * * * *

D. Sport Fishing. * * *

1. Anglers may fish from March 15 through October 14 in the Washita River and Foss Reservoir. Anglers may bank fish year round in the Washita River and Foss Reservoir from open areas.

* * * * *

3. We do not allow boats and other flotation devices on refuge waters from October 15 through March 14.

* * * * *

35. In § 32.56 Oregon by:

a. Revising paragraph A. of Bandon Marsh National Wildlife Refuge;

b. Removing Baskett Slough National Wildlife Refuge;

c. Revising paragraphs A.6. and B.3. of Cold Springs National Wildlife Refuge;

d. Revising paragraphs A.2. and B.2. of Deer Flat National Wildlife Refuge;

e. Alphabetically adding Julia Butler Hansen Refuge for the Columbian White-Tailed Deer;

f. Revising paragraph A.2. of Klamath Forest National Wildlife Refuge;

g. Revising paragraphs A. and D. of Lewis and Clark National Wildlife Refuge;

h. Revising paragraphs A.4. and B.2. of Lower Klamath National Wildlife Refuge;

i. Revising paragraphs A.2. and B.3. of Malheur National Wildlife Refuge;

j. Revising paragraphs A.7. and B.3. of McKay Creek National Wildlife Refuge;

k. Revising Umatilla National Wildlife Refuge; and

l. Revising paragraph A.2. of Upper Klamath National Wildlife Refuge to read as follows:

§ 32.56 Oregon.

* * * * *

Bandon Marsh National Wildlife Refuge

A. Hunting of Migratory Game Birds. We allow hunting of geese, ducks, coots, snipe, doves, and pigeons on designated areas of the refuge subject to the following condition: Waterfowl and snipe hunters may possess only approved nontoxic shot while in the field.

* * * * *

Cold Springs National Wildlife Refuge

A. Hunting of Migratory Game Birds. * * *

* * * * *

6. Waterfowl and snipe hunters may possess only approved nontoxic shot while in the field.

* * * * *

B. Upland Game Hunting. * * *

* * * * *

3. You may possess only approved nontoxic shot while in the field.

* * * * *

Deer Flat National Wildlife Refuge

A. Hunting of Migratory Game Birds. * * *

* * * * *

2. Waterfowl and snipe hunters may possess only approved nontoxic shot while in the field.

* * * * *

B. Upland Game Hunting. * * *

* * * * *

2. Pheasant, quail, and partridge hunters may possess only approved nontoxic shot while in the field.

* * * * *

Julia Butler Hansen Refuge for the Columbian White-Tailed Deer

A. Hunting of Migratory Game Birds. We allow hunting of geese, ducks, coots, and common snipe on the Wallace Island Unit subject to the following condition: You may possess only approved nontoxic shot while in the field.

B. Upland Game Hunting. [Reserved]

C. Big Game Hunting. [Reserved]

D. Sport Fishing. We allow sport fishing along the shoreline of the Wallace Island Unit in accordance with State regulations.

Klamath Forest National Wildlife Refuge

A. Hunting of Migratory Game Birds. * * *

* * * * *

2. Waterfowl and snipe hunters may possess only approved nontoxic shot while in the field.

* * * * *

Lewis and Clark National Wildlife Refuge

A. Hunting of Migratory Game Birds. We allow hunting of geese, ducks, coots, and common snipe on designated areas of the refuge subject to the following conditions:

1. You may possess only approved nontoxic shot while in the field.

2. We do not allow hunting on all exposed lands on Miller Sands Island and its partially enclosed lagoon, as posted. We do not allow hunting inside the diked portion of Karlson Island, as posted.

* * * * *

D. Sport Fishing. We allow sport fishing along the shoreline of the refuge islands in accordance with State regulations.

Lower Klamath National Wildlife Refuge

A. Hunting of Migratory Game Birds. * * *

* * * * *

4. Waterfowl and snipe hunters may possess only approved nontoxic shot while in the field.

B. Upland Game Hunting. * * *

* * * * *

2. You may possess only approved nontoxic shot while in the field.

* * * * *

Malheur National Wildlife Refuge

A. Hunting of Migratory Game Birds. * * *

* * * * *

2. You may possess only approved nontoxic shot while in the field.

* * * * *

B. Upland Game Hunting. * * *

* * * * *

3. You may possess only approved nontoxic shot while in the field on designated areas east of Highway 205.

* * * * *

McKay Creek National Wildlife Refuge

A. Hunting of Migratory Game Birds. * * *

* * * * *

7. Waterfowl and snipe hunters may possess only approved nontoxic shot while in the field.

B. Upland Game Hunting. * * *

* * * * *

3. You may possess only approved nontoxic shot while in the field.

* * * * *

Umatilla National Wildlife Refuge

A. Hunting of Migratory Game Birds. We allow hunting of geese, ducks, coots, and common snipe on designated areas of the refuge subject to the following conditions:

1. The refuge is open from 4:00 a.m. to 1½ hours after sunset except for the Hunter Check Station parking lot at the McCormack Unit, which is open each morning 2 hours prior to State shooting hours for waterfowl. We do not allow decoys, boats, and other personal property on the refuge following each day's hunt.

2. In the McCormack Unit, we allow hunting only on Wednesdays, Saturdays, Sundays, Thanksgiving Day, and New Year's Day.

3. We require waterfowl hunting parties in the Boardman Unit to space themselves a minimum of 200 yards (180 m) apart.

4. You may possess no more than 25 shells while in the field.

5. We require permits for hunting on the McCormack Unit.

6. You may possess only approved nontoxic shot while in the field.

B. Upland Game Hunting. We allow hunting of pheasant, chukar, Hungarian partridge, and quail on designated areas of the refuge subject to the following conditions:

1. We do not allow hunting of upland game birds until noon of each hunt day.

2. In the McCormack Unit, we allow hunting only on Wednesdays, Saturdays, Sundays, Thanksgiving Day, and New Year's Day.

3. You may possess only approved nontoxic shot while in the field.

4. You may possess no more than 25 shells while in the field.

5. We require permits for hunting on the McCormack Unit.

C. Big Game Hunting. We allow hunting of deer on designated areas of the refuge subject to the following condition: Hunting is by permit only.

D. Sport Fishing. We allow fishing on designated areas of the refuge subject to the following conditions:

1. The refuge is open from 5 a.m. to 1½ hours after sunset.

2. We allow fishing on refuge impoundments and ponds from February 1 through September 30. We open other refuge waters (Columbia River and its backwaters) in accordance with State regulations.

3. We allow only nonmotorized boats and boats with electric motors on refuge impoundments and ponds.

4. We only allow fishing with hook and line.

Upper Klamath National Wildlife Refuge

A. Hunting of Migratory Game Birds. * * *

* * * * *

2. Waterfowl and snipe hunters may possess only approved nontoxic shot while in the field.

* * * * *

36. In § 32.57 Pennsylvania by revising Ohio River Islands National Wildlife Refuge to read as follows:

§ 32.57 Pennsylvania.

* * * * *

Ohio River Islands National Wildlife Refuge

Refer to § 32.68 West Virginia for regulations.

* * * * *

37. In § 32.60 South Carolina by revising paragraphs C. and D. of ACE Basin National Wildlife Refuge to read as follows:

§ 32.60 South Carolina.

* * * * *

ACE Basin National Wildlife Refuge

* * * * *

C. Big Game Hunting. We allow hunting of white-tailed deer on designated areas of the refuge subject to the following condition: We require permits.

D. Sport Fishing. Anglers may fish on the refuge in accordance with State law and as specifically designated in refuge publications.

* * * * *

38. In § 32.61 South Dakota by revising paragraph B. of Pocasse National Wildlife Refuge to read as follows:

§ 32.61 South Dakota.

* * * * *

Pocasse National Wildlife Refuge

* * * * *

B. Upland Game Hunting. We allow hunting of pheasant on designated areas of the refuge subject to the following condition: You may possess only approved nontoxic shot while in the field.

* * * * *

39. In § 32.62 Tennessee by:

a. Revising paragraphs B., C., and D. of Cross Creeks National Wildlife Refuge;

b. Revising paragraph A.4. of Hatchie National Wildlife Refuge; and

c. Revising Tennessee National Wildlife Refuge to read as follows:

§ 32.62 Tennessee.

* * * * *

Cross Creeks National Wildlife Refuge

* * * * *

B. Upland Game Hunting. We allow hunting of squirrels on designated areas of the refuge subject to the following condition: We require permits.

C. Big Game Hunting. We allow hunting of white-tailed deer and turkey on designated areas of the refuge subject to the following condition: We require permits.

D. Sport Fishing. We allow fishing on designated areas of the refuge subject to the following conditions:

1. We allow fishing on refuge pools and reservoirs from March 15 through October 31 from sunrise to sunset.

2. We do not allow bows and arrows, trotlines, limblines, jugs, and slat baskets in refuge pools and reservoirs.

3. We do not allow taking of frogs.

4. The length limit for largemouth bass taken from Elk and South Cross Creeks' reservoirs is less than 12 inches (30 cm) and more than 15 inches (37.5 cm). Anglers must immediately release unharmed largemouth bass from 12 inches (30 cm) to 15 inches (37.5 cm). We prohibit possession of largemouth bass between 12 inches (30 cm) and 15 inches (37.5 cm).

Hatchie National Wildlife Refuge

A. Hunting of Migratory Game Birds. * * *

* * * * *

4. You may possess only approved nontoxic shot while in the field.

* * * * *

Tennessee National Wildlife Refuge

A. Hunting of Migratory Game Birds. [Reserved]

B. Upland Game Hunting. We allow hunting of squirrels and raccoons on designated areas of the refuge subject to the following conditions:

1. We require permits.

2. You must unload and encase or dismantle firearms transported in motor vehicles.

C. Big Game Hunting. We allow hunting of white-tailed deer and turkey on designated areas of the refuge subject to the following conditions:

1. We require permits.

2. You must unload and encase or dismantle firearms transported in motor vehicles.

D. Sport Fishing. We allow fishing on designated portions of the refuge subject to the following conditions:

1. We close impounded waters to fishing from November 1 through March 14.

2. We close Swamp Creek, Britton Ford, and Bennett's Creek embayments to fishing and boating from November 1 through March 14.

3. Anglers must launch boats from designated access points only. We restrict boats to ''slow speed/minimum wake'' on all refuge impoundments open to fishing.

4. Anglers may not leave boats on the refuge overnight.

40. In § 32.63 Texas by:

a. Revising paragraph B.3. of Buffalo Lake National Wildlife Refuge; and

b. Revising Hagerman National Wildlife Refuge to read as follows:

§ 32.63 Texas.

* * * * *

Buffalo Lake National Wildlife Refuge

* * * * *

B. Upland Game Hunting. * * *

* * * * *

3. You may possess only approved nontoxic shot while in the field.

* * * * *

Hagerman National Wildlife Refuge

A. Hunting of Migratory Game Birds. We allow hunting of mourning doves in the month of September on designated areas of the refuge, subject to the following conditions:

1. We require you to check in and out of the hunt area.

2. We allow only shotguns.

3. You may possess no shot larger than #4 on the hunting area.

B. Upland Game Hunting. We allow hunting of quail in the month of February and squirrel and rabbit in the months of February and September on designated areas of the refuge subject to the following conditions:

1. We require you to check in and out of the hunt area.

2. We allow only shotguns.

3. You may possess no shot larger than #4 on the hunting area.

4. You must plug shotguns to hold no more than three shells during the September dove season.

C. Big Game Hunting. We allow hunting of white-tailed deer and feral hogs on designated areas of the refuge subject to the following conditions:

1. You may archery hunt as listed in the refuge hunt information sheet. You must obtain a refuge permit and pay a hunt fee.

2. We allow hunting with firearms including shotguns, 20 gauge or larger, loaded with rifled slug during a special youth hunt as listed in the refuge hunt information sheet. We require permits.

D. Sport Fishing. We allow fishing on designated areas of the refuge subject to the following conditions:

1. Lake Texoma and connected streams are open to fishing year round.

2. We allow fishing in ponds and stock tanks from April 1 through September 30.

3. Fishermen may string trotlines between anchored floats only. We do not allow lines attached to rubber bands, sticks, poles, trees, or other fixed objects in refuge ponds or impoundments.

4. We do not allow fishing from bridges or roadways.

5. We do not allow boats and other flotation devices on the waters of Lake Texoma from October 1 through March 31, or at any time on refuge ponds and impoundments.

* * * * *

41. In § 32.64 Utah by:

a. Revising paragraphs A.2. and B.1. of Bear River Migratory Bird Refuge; and

b. Revising paragraph B. of Ouray National Wildlife Refuge to read as follows:

§ 32.64 Utah.

* * * * *

Bear River Migratory Bird Refuge

A. Hunting of Migratory Game Birds. * * *

* * * * *

2. You may possess only approved nontoxic shot while in the field.

* * * * *

B. Upland Game Hunting. * * *

1. You may possess only approved nontoxic shot while in the field.

* * * * *

Ouray National Wildlife Refuge

* * * * *

B. Upland Game Hunting. We allow hunting of pheasant on designated areas of the refuge subject to the following condition: You may possess only approved nontoxic shot while in the field.

* * * * *

42. In § 32.65 Vermont by revising paragraph B.4. of Missisquoi National Wildlife Refuge to read as follows:

§ 32.65 Vermont.

* * * * *

Missisquoi National Wildlife Refuge

* * * * *

B. Upland Game Hunting. * * *

* * * * *

4. Shotgun hunters may possess only approved nontoxic shot while in the field.

* * * * *

43. In § 32.66 Virginia by:

a. Revising Chincoteague National Wildlife Refuge; and

b. Alphabetically adding Plum Tree Island National Wildlife Refuge to read as follows:

§ 32.66 Virginia.

* * * * *

Chincoteague National Wildlife Refuge

A. Hunting of Migratory Game Birds. We allow hunting of waterfowl and rails on designated areas of the refuge subject to the following conditions:

1. You must possess written permission to hunt in the nonguided public hunting areas.

2. On Wildcat Marsh we reserve compartments 1–4 for guided hunting only with refuge-designated commercial guides.

B. Upland Game Hunting. [Reserved]

C. Big Game Hunting. We allow hunting of white-tailed and sika deer in designated areas of the refuge subject to the following condition: We require a refuge permit.

D. Sport Fishing. We allow fishing, crabbing, and clamming on designated areas of the refuge subject to the following conditions:

1. We allow sport fishing, crabbing, and clamming in salt water areas and in that portion of Swan Cove adjacent to Beach Road. We close all other refuge ponds, impoundments, and channels to these activities.

2. You must attend traps and crab pots.

3. You must obtain a permit to remain on the refuge after normal closing hours.

* * * * *

Plum Tree Island National Wildlife Refuge

A. Hunting of Migratory Game Birds. We allow hunting of waterfowl on designated areas of the refuge subject to the following conditions:

1. We require permits.

2. Waterfowl hunters may possess only approved nontoxic shot while in the field.

B. Upland Game Hunting. [Reserved]

C. Big Game Hunting. [Reserved]

D. Sport Fishing. [Reserved]

* * * * *

44. In § 32.67 Washington by:

a. Revising Columbia National Wildlife Refuge, Julia Butler Hansen Refuge for the Columbian White-Tailed Deer, and Willapa National Wildlife Refuge;

b. Revising paragraph A. of Conboy Lake National Wildlife Refuge;

c. Deleting paragraphs A.6. and B.6., revising the introductory text of paragraph B., and revising paragraphs A.3. and B.3. of McNary National Wildlife Refuge;

d. Revising paragraphs A.5. and B.2. of Toppenish National Wildlife Refuge; and

e. Removing paragraphs A.6. and B.4. of Umatilla National Wildlife Refuge to read as follows:

§ 32.67 Washington.

* * * * *

Columbia National Wildlife Refuge

A. Hunting of Migratory Game Birds. We allow hunting of geese, ducks, coots, and common snipe on designated areas of the refuge subject to the following conditions:

1. In Marsh Unit 1, we allow hunting only on Wednesdays, Saturdays, and Sundays.

2. Waterfowl and snipe hunters may possess only approved nontoxic shot while in the field.

3. In Marsh Unit 1, concurrent with the State's designated Youth Day prior to the opening of the waterfowl hunt, only youth aged 10–17 and an accompanying adult aged 18 or over may hunt.

B. Upland Game Hunting. We allow hunting of pheasant, quail, and partridge on designated areas of the refuge subject to the following conditions:

1. We allow hunting of upland game birds only during State seasons that run concurrently with the State waterfowl season.

2. We allow only shotguns and bows and arrows.

3. Upland game bird hunters may possess only approved nontoxic shot while in the field.

4. In Marsh Unit 1, concurrent with the State's designated Youth Day prior to the opening of the waterfowl hunt, only youth aged 10–17 and an accompanying adult aged 18 or over may hunt.

C. Big Game Hunting. We allow hunting of deer on designated areas of the refuge subject to the following condition: We allow only shotgun and archery hunting.

D. Sport Fishing. We allow fishing on designated areas of the refuge subject to the following conditions:

1. We allow nonmotorized boats and boats with electric motors on Upper and Lower Hampton, Hutchinson, Royal, and Shiner Lakes.

2. We allow motorized boats and nonmotorized boats on all other refuge waters open to fishing.

3. We prohibit the taking of bullfrogs.

Conboy Lake National Wildlife Refuge

A. Hunting of Migratory Game Birds. We allow hunting of doves, geese, ducks, coots, and common snipe on designated areas of the refuge subject to the following condition: Waterfowl and snipe hunters may possess only approved nontoxic shot while in the field.

* * * * *

Julia Butler Hansen Refuge for the Columbian White-Tailed Deer

A. Hunting of Migratory Game Birds. We allow hunting of geese, ducks, coots, and common snipe on the Hunting Island Unit subject to the following condition: You may possess only approved nontoxic shot while in the field.

B. Upland Game Hunting. [Reserved]

C. Big Game Hunting. [Reserved]

D. Sport Fishing. We allow bank fishing from the Mainland Unit shoreline adjoining the Elochoman and Columbia Rivers as well as Steamboat and Brooks Sloughs, in accordance with State fishing regulations. We also allow bank fishing in the pond adjacent to the diking district pumping station by Brooks Slough. We close all other interior water of the Mainland Unit to fishing.

* * * * *

McNary National Wildlife Refuge

A. Hunting of Migratory Game Birds.

* * *

* * * * *

3. Waterfowl and snipe hunters may possess only approved nontoxic shot while in the field.

* * * * *

B. Upland Game Hunting. We allow hunting of pheasant, quail, chukar, and Hungarian partridge on designated areas of the refuge subject to the following conditions:

* * * * *

3. You may possess only approved nontoxic shot while in the field.

* * * * *

Toppenish National Wildlife Refuge

A. Hunting of Migratory Game Birds.

* * *

* * * * *

5. Waterfowl and snipe hunters may possess only approved nontoxic shot while in the field.

* * * * *

B. Upland Game Hunting. * * *

* * * * *

2. You may possess only approved nontoxic shot while in the field.

* * * * *

Umatilla National Wildlife Refuge

A. Hunting of Migratory Game Birds.

* * *

* * * * *

6. Waterfowl and snipe hunters may possess only approved nontoxic shot while in the field.

B. Upland Game Hunting. * * *

* * * * *

4. Upland game bird hunters may possess only approved nontoxic shot while in the field.

* * * * *

Willapa National Wildlife Refuge

A. Hunting of Migratory Game Birds. We allow hunting of geese, ducks, and coots on designated areas of the Riekkola and Lewis Units, in accordance with State hunting regulations and subject to the following conditions:

1. At the Riekkola Unit, prior to entering the hunt area, we require you to obtain a permit, pay a recreation user fee, and obtain a blind assignment.

2. At the Riekkola Unit you may take ducks and coots only coincidental to hunting geese. We do not allow exclusive hunting of ducks in the Riekkola Unit.

3. We allow hunting in the Riekkola Unit only from established blinds on Wednesdays and Saturdays.

4. At the Riekkola Unit you may possess and use no more than 24 shells per day while in the field.

5. You may possess only approved nontoxic shotgun shells.

B. Upland Game Hunting. We allow hunting of blue and ruffed grouse on Long Island, subject to the following conditions:

1. We require you to obtain and carry a refuge permit and report game taken, as specified with the permit.

2. We allow only archery hunting.

3. We do not allow firearms on Long Island at any time.

4. We do not allow dogs on Long Island.

C. Big Game Hunting. We allow hunting for deer, elk, and bear on Long Island, subject to the following conditions:

1. We require you to obtain and carry a refuge permit and report game taken, as specified with the permit.

2. We allow only archery hunting.

3. We do not allow firearms on Long Island at any time.

4. We do not allow dogs on Long Island.

D. Sport Fishing. We allow fishing along the shoreline of the refuge in accordance with State regulations.

45. In § 32.68 West Virginia by:

a. Revising paragraph B.2. of Canaan Valley National Wildlife Refuge; and

b. Revising paragraph B.4. of Ohio River Islands National Wildlife Refuge to read as follows:

§ 32.68 West Virginia.

* * * * *

Canaan Valley National Wildlife Refuge

* * * * *

B. Upland Game Hunting. * * *

* * * * *

2. Shotgun hunters may possess only approved nontoxic shot while hunting on the refuge.

* * * * *

Ohio River Islands National Wildlife Refuge

* * * * *

B. Upland Game Hunting. * * *

* * * * *

4. You may possess only approved nontoxic shot while in the field.

* * * * *

46. In § 32.69 Wisconsin by:

a. Revising paragraph C. of Fox River National Wildlife Refuge;

b. Revising Horicon National Wildlife Refuge and Necedah National Wildlife Refuge; and

c. Alphabetically adding St. Croix Wetland Management District to read as follows:

§ 32.69 Wisconsin.

* * * * *

Fox River National Wildlife Refuge

* * * * *

C. Big Game Hunting. We allow hunting of white-tailed deer on designated areas of the refuge subject to the following conditions:

1. We require permits.

2. We do not allow the construction or use of blinds, platforms, or ladders.

3. We allow hunting only during the State firearms season and during a designated time period of the archery season.

* * * * *

Horicon National Wildlife Refuge

A. Hunting of Migratory Game Birds. We allow hunting of ducks and coots on designated areas of the refuge subject to the following conditions:

1. We require permits.

2. We allow only participants in the Young Wildfowlers and Special Programs to hunt.

B. Upland Game Hunting. We allow hunting of ring-necked pheasant, gray partridge, squirrel, and cottontail rabbit on designated areas of the refuge from the opening of the respective State seasons through the State deer firearms season, and subject to the following conditions:

1. Shotgun hunters may possess only approved nontoxic shot while hunting upland game species.

2. Hunting in the youth/novice pheasant hunt area (Area F) is for youth who are 12–15 years of age, and by permit.

C. Big Game Hunting. We allow hunting of white-tailed deer on designated areas of the refuge subject to the following conditions:

1. We allow hunting only during the early archery and State firearms season.

2. We do not allow the construction and use of permanent blinds, platforms, or ladders.

3. You must remove all stands from the refuge following each day's hunt.

4. Hunting in the area surrounding the office/visitor center (Area E) is by permit only.

5. Hunting in the auto tour/hiking trail complex (Area D) is open only during the State firearms deer season.

D. Sport Fishing. We allow fishing on designated areas of the refuge subject to the following conditions:

1. We allow fishing from April 15 through September 15.

2. We allow only bank fishing.

* * * * *

Necedah National Wildlife Refuge

A. Hunting of Migratory Game Birds. We allow hunting of migratory game birds only on designated areas of the refuge.

B. Upland Game Hunting. We allow hunting of wild turkey, ruffed grouse, gray squirrel, fox squirrel, cottontail rabbit, snowshoe hare, and raccoon only on designated areas of the refuge subject to the following conditions:

1. You may possess only unloaded guns in the retrieval zone of Refuge Area 7 during the State waterfowl hunting season, except while hunting deer during the gun deer season.

2. During the spring turkey hunting season only, persons possessing a valid State spring turkey permit may enter and hunt wild turkeys in all open refuge areas.

3. Refuge Area 3 is open to hunting after the State deer gun season through the end of the respective State seasons or until February 28, whichever occurs first.

4. You may use dogs only when hunting small game and waterfowl.

C. Big Game Hunting. We allow hunting of white-tailed deer on designated areas of the refuge subject to the following conditions:

1. We prohibit the possession of a loaded rifle or shotgun within 50 feet (15 m) of the centerline of all paved or graveled roads and designated trails, or discharging these weapons from, across, down, or alongside these roads and trails within the refuge.

2. We do not allow the construction of permanent blinds, platforms, or ladders.

3. You may use portable elevated devices but must lower them to ground level at the close of shooting hours each day. You must remove all blinds, stands, platforms, and ladders from the refuge at the end of the hunting season.

4. Refuge Areas 1, 2, 4, 5, 6, and 7 are open to deer hunting.

5. Refuge Area 3 is open to deer hunting during the State gun, muzzleloader, and late archery seasons. Unarmed deer hunters may enter Area 3 to scout beginning the Saturday prior to the gun deer season.

6. We do not allow target or practice shooting.

7. We prohibit the use of flagging, paint, blazes, tacks, or other types of markers.

D. Sport Fishing. We allow fishing in designated waters of the refuge at designated times subject to the following conditions: We allow use of nonmotorized boats in Sprague-Goose Pools only when these pools are open to fishing. We allow motorized boats in Suk Cerney Pool.

St. Croix Wetland Management District

A. Hunting of Migratory Game Birds. We allow hunting of migratory game birds throughout the district except that you may not hunt on designated portions of the St. Croix Prairie Waterfowl Production Area in St. Croix County or on the Oakridge Waterfowl Production Area in St. Croix County.

B. Upland Game Hunting. We allow hunting of upland game throughout the district except that you may not hunt on designated portions of the St. Croix Prairie Waterfowl Production Area in St. Croix County or on the Oakridge Waterfowl Production Area in St. Croix County.

C. Big Game Hunting. We allow hunting of big game throughout the district except that you may not hunt on designated portions of the St. Croix Prairie Waterfowl Production Area in St. Croix County.

D. Sport Fishing. [Reserved]

* * * * *

47. In § 32.70 Wyoming by:

a. Revising paragraph B. of Pathfinder National Wildlife Refuge; and

b. Revising paragraph B. of Seedskadee National Wildlife Refuge to read as follows:

§ 32.70 Wyoming.

* * * * *

Pathfinder National Wildlife Refuge

* * * * *

B. Upland Game Hunting. We allow hunting of sage grouse and cottontail rabbit on designated areas of the refuge subject to the following condition: You may possess only approved nontoxic shot while in the field.

* * * * *

Seedskadee National Wildlife Refuge

* * * * *

B. Upland Game Hunting. We allow hunting of sage grouse and cottontail rabbit on designated are as of the refuge subject to the following condition: You may possess only approved nontoxic shot while in the field.

* * * * *

48. In § 32.71 by revising the section heading and removing the listings of Guam National Wildlife Refuge and Kilauea Point National Wildlife Refuge to read as follows:

§ 32.71 United States Unincorporated Pacific Insular Possessions.

* * * * *

49. By adding § 32.72 to Subpart B to read as follows:

§ 32.72 Guam.

We have opened the following refuge unit to hunting and/or fishing with applicable refuge-specific regulations.

Guam National Wildlife Refuge

A. Hunting of Migratory Game Birds. [Reserved]

B. Upland Game Hunting. [Reserved]

C. Big Game Hunting. [Reserved]

D. Sport Fishing. Anglers may fish and collect marine life on designated areas of the Refuge only in accordance with the Refuge Fishing Regulations leaflet available at Refuge Headquarters. We prohibit the use of gill nets for catching reef fish.

Dated: April 11, 2000.

Stephen C. Saunders,

Assistant Secretary for Fish and Wildlife and Parks

[FR Doc. 00–11410 Filed 5–11–00; 8:45 am]

BILLING CODE 4310–55–P

Federal Register

Friday,
May 12, 2000

Part IV

Department of Education

Career Resource Network State Grants; Notice Inviting Applications for New Awards for Fiscal Year (FY) 2000

DEPARTMENT OF EDUCATION

[CFDA No: 84.346]

Career Resource Network State Grants; Notice Inviting Applications for New Awards for Fiscal Year (FY) 2000

Notice to Applicants: This notice is a complete application package. Together with the statute authorizing the program and the Education Department General Administrative Regulations (EDGAR), the notice contains all of the information, application forms, and instructions needed to apply for a grant under this program.

Purpose of Program: To promote improved career and education decision-making by individuals.

Eligible Applicants: State entities designated jointly by the Governor and the State Board for Vocational and Technical Education of any of the 50 States, the Virgin Islands, the Commonwealth of Puerto Rico, the District of Columbia, Guam, American Samoa, the Commonwealth of the Northern Mariana Islands, the Republic of the Marshall Islands, the Federated States of Micronesia, and the Republic of Palau are eligible for an award under this process. However, the Marshall Islands, Federated States of Micronesia, and the Republic of Palau are eligible to receive funds only in Fiscal Years 2000 and 2001. A State may designate an entity other than a State agency to perform the grant functions under this program. However, if a designated entity is not a part of the State government, the eligible agency for the State under section 112 of the Carl D. Perkins Vocational and Technical Education Act of 1998 (Perkins III) must apply for the grant. In that event the eligible agency under Perkins III will be the grant recipient and must either directly administer the grant or supervise the administration of the project, as required by 34 CFR 75.701.

Not more than one grant will be awarded to serve the residents of a single State or outlying area in this competition.

To receive funding, each applicant must submit evidence that the designated entity, whether it is part of the State government or another entity that will perform the grant function for the eligible agency under Perkins III, has been designated jointly by the Governor and the State Board for Vocational and Technical Education. In any case, if the designated entity is not a State agency, the eligible agency under Perkins III and the Governor are accountable for the proper expenditure of funds.

Deadline for Transmittal of Applications: June 12, 2000.

Deadline for Intergovernmental Review: June 26, 2000.

Available Funds: $7,650,000 for the first 12 months of the 24-month project period. Funding for the second 12-month period of the 24-month project period is subject to the availability of funds and to a grantee meeting the requirements of 34 CFR 75.253.

Estimated Range of Awards: The actual amount of each award made under this competition will depend on such factors as the scope and quality of the application and will be determined during pre-award clarification discussions with the Department's Office Vocational and Adult Education, Division of Vocational-Technical Education. However, the Department strongly encourages all applicants to consider these factors and the estimated grant amounts provided below, in deciding the amount of funds to request.

The estimated grant amounts were determined by allocating to every State and outlying area a minimum amount that the Department believes is necessary to carry out an effective program and distributing the remaining funds on the basis of each State's or outlying area's respective share of the funds allocated by formula under section 111 of Perkins III. The formula set out in section 111 takes into account State population and per capita income, among other factors. These grant estimates assume that all 59 eligible applicants will submit applications which meet the requirements established by the statute and this notice and are determined by the Department to merit funding, based on the criteria described in this notice.

Eligible applicant	Estimated grant amount
ALABAMA	$135,784
ALASKA	107,805
ARIZONA	135,592
ARKANSAS	121,442
CALIFORNIA	308,427
COLORADO	125,341
CONNECTICUT	115,719
DELAWARE	107,887
FLORIDA	192,076
GEORGIA	155,340
HAWAII	109,555
IDAHO	111,645
ILLINOIS	173,013
INDIANA	144,210
IOWA	122,170
KANSAS	119,933
KENTUCKY	133,158
LOUISIANA	139,401
MAINE	109,555
MARYLAND	127,940
MASSACHUSETTS	132,081
MICHIGAN	167,939
MINNESOTA	131,603
MISSISSIPPI	124,948
MISSOURI	140,010
MONTANA	109,309
NEBRASKA	112,836
NEVADA	110,416
NEW HAMPSHIRE	109,555
NEW JERSEY	139,790
NEW MEXICO	115,237
NEW YORK	195,114
NORTH CAROLINA	153,627
NORTH DAKOTA	107,805
OHIO	179,969
OKLAHOMA	128,991
OREGON	123,549
PENNSYLVANIA	175,751
RHODE ISLAND	109,555
SOUTH CAROLINA	131,604
SOUTH DAKOTA	107,805
TENNESSEE	140,160
TEXAS	251,418
UTAH	122,369
VERMONT	107,805
VIRGINIA	143,609
WASHINGTON	137,193
WEST VIRGINIA	115,608
WISCONSIN	138,598
WYOMING	107,805
DISTRICT OF COLUMBIA	107,805
PUERTO RICO	134,182
AMERICAN SAMOA	85,732
NORTHERN MARIANAS	85,732
GUAM	86,306
VIRGIN ISLANDS	86,051
MARSHALL ISLANDS	65,380
MICRONESIA	65,380
PALAU	65,380
Total	7,650,000

Estimated Average Size of Awards: $129,661 for 12 months.

Estimated Number of Awards: 59.

Note: The Department is not bound by any estimates in this notice.

Project Period: 24 months.

Applicable Statute and Regulations: (a) The relevant provisions of the Carl D. Perkins Vocational and Technical Education Act of 1998 (Perkins III), 20 U.S.C.A. 2301 *et seq.*, in particular, section 118(b).

(b) The Education Department General Administrative Regulations (EDGAR) as follows:

(1) 34 CFR Part 75 (Direct Grant Programs).

(2) 34 CFR Part 77 (Definitions that Apply to Department Regulations).

(3) 34 CFR Part 79 (Intergovernmental Review of Department of Education Programs and Activities).

(4) 34 CFR Part 80 (Uniform Administrative Requirements for Grants and Cooperative Agreements to State and Local Governments).

(5) 34 CFR Part 81 (General Education Provisions Act—Enforcement).

(6) 34 CFR Part 82 (New Restrictions on Lobbying).

(7) 34 CFR Part 85 (Government-wide Debarment and Suspension

(Nonprocurement) and Government-wide Requirements for Drug-Free Workplace (Grants)).

(8) 34 CFR Part 86 (Drug and Alcohol Abuse Prevention).

(9) 34 CFR Part 97 (Protection of Human Subjects).

(10) 34 CFR Part 98 (Student Rights In Research, Experimental Programs and Testing).

(11) 34 CFR Part 99 (Family Educational Rights and Privacy).

SUPPLEMENTARY INFORMATION:

Background

Supporting the career development of young people and helping them to make informed choices about their educational and career options have become important components of State and local efforts to reform schools and improve student achievement. Understanding the connection between what is taught in the classroom and how that knowledge will be used in a future career can make learning more meaningful to students, increase their motivation to learn, and improve student results. Reform-driven innovations such as charter schools, magnet schools, and career academies, include models that use broad career areas as the context for teaching challenging academic content and technical skills. These and other models incorporate early exposure to career possibilities, and the educational requirements needed to pursue them, as strategies to help students and parents make decisions that best meet each student's individual interests, needs, and aspirations.

Research also indicates that many young people, particularly those from low-income families, do not enroll in postsecondary education because they lack sufficient information about career opportunities and the education and training required for entry into and success in their chosen field. Students who do not develop a career and education plan prior to entering secondary school are less likely to enroll in school courses required for college entry and do not plan adequately for college education financing. Effective career guidance and academic counseling can help ensure that students and their parents set their sights high, plan for, and are prepared for postsecondary education.

While career development is particularly important for young people, individuals of all ages need access to information and guidance on careers. New technologies, heightened global competition, and the information revolution are transforming the nature of work and careers. Individuals can no longer assume that they will work for the same organization, remain within the same industry, or even require the same technical skills during their entire working lives. They must have access to career and educational information so that they may become active in making decisions regarding their occupation. To succeed in our dynamic, rapidly-changing economy, all individuals need up-to-date academic and technical skills, as well as access to career and education information, so that they may become active and effective managers of their own careers.

Growing recognition of the important role that career guidance and academic counseling services play in supporting student success is evidenced by the variety of Federal, State, and local programs which promote and support these services. Several Department of Education programs, including Perkins III State grants, Tech-Prep, GEAR-UP, and TRIO programs, provide funding for career guidance and academic counseling services for students. In addition, the School-to-Work Opportunities Program, jointly-administered by the Department of Education and the Department of Labor, has provided ''venture capital'' to State and local partnerships, to initiate or expand a wide range of career development activities for young people. Many States, local educational agencies, and institutions of higher education also support career guidance and academic counseling services for students. In addition, with assistance under Title I of the Workforce Investment Act (WIA), States and localities are building One-Stop Career Center systems that offer all individuals information and assistance in obtaining employment, training, and education.

Career Resource Network Grants

Career Resource Network grants provided under section 118 of Perkins III support the implementation of Statewide, systemic strategies for providing young people and adults with these critical career information resources and the skills they need to make effective educational and career decisions throughout their lives.

To achieve this goal, State entities may engage in a variety of activities such as research and innovative product development, professional development activities, development of career information delivery systems, and the development and dissemination of curricula and other learning resources.

Coordination With Related Program Activities

To assist States in improving student performance and outcomes, all programmatic and technical assistance activities need to be coordinated within a continuous improvement framework. The identification of the major strategies that positively impact student performance and integration of those strategies within a State's performance measurement system is critical to achieving results. As a result, the Department has begun to align all of its major grant resources, initiatives, and technical assistance activities, to assist States in their efforts to improve student performance. These include: Efforts to achieve education reform through the development of career pathway models, funding of professional development and training projects, and development of performance measurement systems. The Department views coordination and alignment of the activities required under section 118 to its major initiatives, as critical in supporting States' efforts to improve student performance.

In response to the changing economy and education reform initiatives in States, the Department identified sixteen industry-based career areas. These career areas represent all sectors of the economy and include all occupations front line through professional/technical managers. The career areas as they are defined in Appendix A of this notice provide the basis for creation of career pathway models that can be used for the development of both career and academic guidance tools and resources and curriculum development. The U.S. Secretary of Education recently announced the ''Building Linkages'' initiative which is designed to help students more effectively develop and realize career goals. The Secretary was joined by the U.S. Secretary of Transportation in unveiling this initiative which uses the Department's 16 career clusters as the basis for career mapping and curriculum development to prepare a student to succeed in a particular field of endeavor. The Department has funded the Building Linkages projects in five of the sixteen career areas to bring together States, in partnership with colleges, universities and employers, to develop curriculum frameworks. The sixteen areas replace the traditional areas once used by vocational education for reporting student enrollment. The new sixteen areas better reflect career opportunities in the new economy and can be aligned to existing career areas identified by

States. These sixteen career areas are (See Appendix A for definitions):

(a) Agriculture and Natural Resources
(b) Construction
(c) Manufacturing
(d) Logistics, Transportation And Distribution Services
(e) Information Technology Services
(f) Wholesale/Retail Sales And Service
(g) Financial Services
(h) Hospitality And Tourism
(i) Business And Services
(j) Health Services
(k) Human Services
(l) Arts And Communications Services
(m) Legal And Protective Services
(n) Scientific Research And Technical Services
(o) Education And Training Services
(p) Public Administration/Government Services

Career information products organized by the sixteen career cluster areas are used by career guidance and academic counseling programs, schools, teachers, students and parents to understand and explore broad career pathways within and among these career areas. Career areas provide the structure for converting labor market information into useable career information resources and tools for a variety of users. Organizing education by broad career areas and pathways represents a new direction in education and will require training and technical assistance to teachers, school administrators, and counselors to effectively assist students and parents in using this information.

In addition, Perkins III shares a number of common performance goals with WIA titles I and II, including academic and skill attainment, program completion, and placement and retention in employment and postsecondary education. The Department encourages State entities to align their products and services with performance measurement systems under development by Federal and State education, vocational education, workforce development programs, and labor market information organizations in order to support State and local efforts to meet performance targets in their performance measurement systems.

Since 1976, most States and outlying areas have received grants from the National Occupational Information Coordinating Committee (NOICC) to support interagency State Occupational Information Coordinating Committees (SOICCs) under the Carl D. Perkins Vocational and Applied Technology Education Act of 1990 (P.L. 101–392) and its predecessors. Since 1982, States and outlying areas have also received such grants under the Job Training Partnership Act of 1982 (JTPA) (PL 102–367). Funding for these grants ends on June 30, 2000, with the expiration of JTPA. While some of the activities authorized under section 118 of Perkins III are similar to those which could have been carried out under the SOICC grant program, there are some significant differences which should be noted by applicants.

Unlike the previous SOICC grant program, the development, implementation, and maintenance of occupational information systems and labor market information products are not authorized uses of funds under section 118 of Perkins III. Section 15 of the Wagner-Peyser Act as amended by the Workforce Investment Act (WIA) authorizes States and outlying areas to collect, analyze, and disseminate occupational and labor market information. In contrast, section 118 of Perkins III funds may be used by States and outlying areas for the development and delivery of career counseling and educational guidance resources and services, which utilize the occupational and labor market information.

Further, none of the functions and activities assisted under section 118 may duplicate functions and activities carried out under the WIA or section 15 of the Wagner-Peyser Act. To assist job-seekers as well as employers, the Department of Labor has created America's Career Kit, an array of online information resources on job openings, persons looking for employment and their qualifications, and education and training opportunities. With assistance under Title I of the WIA, States and localities are building One-Stop Career Center systems that offer all individuals information and assistance in obtaining employment, training, and education. Section 15 of the Wagner-Peyser Act also provides States and outlying areas with assistance in collecting, analyzing, and disseminating occupational and labor market information. Section 118 funds may not be used to duplicate any of these or other activities assisted under WIA, but may be used to supplement and enhance them. For example, professional development activities or other resources developed to support academic counseling and career guidance for young people may be made available to youth-serving programs that receive assistance under WIA Title I, provided that they do not duplicate functions or activities that are assisted by WIA. The Secretary encourages applicants to collaborate with State and local recipients of WIA funds in deciding how they will implement the activities required by section 118(b) both to ensure that funds are used most effectively and that the non-duplication requirements of section 118(c)(2) are fulfilled.

Finally, applicants should note that States and outlying areas are not required to establish or maintain interagency State Occupational Information Coordinating Committees in order to receive funds under section 118. Support for these bodies, however, is an eligible use of funds. States and outlying areas may find these bodies to be an effective means of coordinating their section 118 activities with related State and Federal initiatives.

Required Activities

(a) Under this competition, grantees must carry out projects that—

(1) Provide support for a career guidance and academic counseling program designed to promote improved career and education decision-making by individuals, especially in areas of career information delivery and use;

(2) Make available to students, parents, teachers, administrators, and counselors, and to improve accessibility with respect to, information and planning resources that relate educational preparation to career goals and expectations;

(3) Equip teachers, administrators, and counselors with the knowledge and skills needed to assist students and parents with career exploration, educational opportunities, and education financing;

(4) Assist appropriate State entities in tailoring career-related educational resources and training for use by such entities;

(5) Improve coordination and communication among administrators and planners of programs authorized by Perkins III and by section 15 of the Wagner-Peyser Act at Federal, State, and local levels to ensure non-duplication of efforts and the appropriate use of shared information and data; and

(6) Provide ongoing means for customers, such as students and parents, to provide comments and feedback on products and services and to update resources, as appropriate, to better meet customer requirements.

(b) Grants may be used to supplement, but not to duplicate, activities under section 15 of the Wagner-Peyser Act.

(c) Functions and activities assisted under a grant may not duplicate the functions and activities carried out under Public Law 105–220; Workforce Investment Act of 1998.

Priorities

Invitational Priorities

We are particularly interested in applications that meet the following priorities.

Invitational Priority 1. Applications that propose to align products and services to be provided with the sixteen industry-based career areas identified in this notice and required as the reporting framework for the new student enrollment form which is part of the Consolidated Annual Report (CAR) required for basic grants under Perkins III. These career areas are set forth fully in the supplementary information section of this notice and are defined in Appendix A to this notice.

Invitational Priority 2. Applications that propose to develop products and services that assist State and local users to achieve student outcomes established by performance measurement and accountability systems under development by Federal and State education, vocational education, and workforce development programs.

Under 34 CFR 75.105(c)(1), we do not give an application that meets these invitational priorities a competitive or absolute preference over other applications.

Selection Criteria

The Secretary uses the following selection criteria to evaluate applications for new grants under this competition. The Secretary awards a total possible score of 100 points. The maximum possible score for each criterion is indicated in parentheses.

(a) *Required Activities.* (65 points) The Secretary reviews each application to determine the extent to which it will—

(1) Provide support for a career guidance and academic counseling program designed to promote improved career and education decision-making by individuals, especially in areas of career information delivery and use;

(2) Make availabale to students, parents, teachers, administrators, and counselors, and to improve accessibility with respect to, information and planning resources that relate educational preparation to career goals and expectations;

(3) Equip teachers, administrators, and counselors with the knowledge and skills needed to assist students and parents with career exploration, educational opportunities, and education financing;

(4) Assist appropriate State entities in tailoring career-related educational resources and training for use by such entities;

(5) Improve coordination and communication among administrators and planners of programs authorized by the Act and by section 15 of the Wagner-Peyser Act at Federal, State, and local levels to ensure non-duplication of efforts and the appropriate use of shared information and data; and

(6) Provide ongoing means for customers, such as students and parents to provide comments and feedback on products and services and to update resources, as appropriate, to better meet customer requirments.

(b) *Quality of the project design.* (10 points)

(1) The Secretary considers the quality of the design of the proposed project.

(2) In determining the quality of the design of the proposed project, the Secretary considers the following factors:

(i) The extent to which the goals, objectives, and outcomes to be achieved by the proposed project are clearly specified and measurable.

(ii) The extent to which the proposed project will be coordinated with similar or related efforts, and with other appropriate community, State, and Federal resources.

(iii) The extent to which performance feedback and continuous improvement are integral to the design of the proposed project.

(c) *Adequacy of resources.* (5 points)

(1) The Secretary considers the adequacy of resources for the proposed project.

(2) In determining the adequacy of resources for the proposed project, the Secretary considers the following factors:

(i) The extent to which the budget is adequate to support the proposed project.

(ii) The extent to which the costs are reasonable in relation to the objectives, design, and potential significance of the proposed project.

(d) *Quality of the management plan.* (10 points)

(1) The Secretary considers the quality of the management plan for the proposed project.

(2) In determining the quality of the management plan for the proposed project, the Secretary considers the following factors:

(i) The adequacy of the management plan to achieve the objectives of the proposed project on time and within budget, including clearly defined responsibilities, timelines, and milestones for accomplishing project tasks.

(ii) The extent to which the time commitments of the project director and principal investigator and other key project personnel are appropriate and adequate to meet the objectives of the proposed project.

(iii) How the applicant will ensure that a diversity of perspectives are brought to bear in the operation of the proposed project, including those of parents, teachers, the business community, a variety of disciplinary and professional fields, recipients or beneficiaries of services, or others, as appropriate.

(e) *Quality of the project evaluation.* (10 points)

(1) The Secretary considers the quality of the evaluation to be conducted of the proposed project.

(2) In determining the quality of the evaluation, the Secretary considers the following factors:

(i) The extent to which the methods of evaluation include the use of objective performance measures that are clearly related to the intended outcomes of the project and will produce quantitative and qualitative data to the extent possible.

(ii) The extent to which the methods of evaluation will provide performance feedback and permit periodic assessment of progress toward achieving intended outcomes.

Intergovernmental Review of Federal Progarms

This program is subject to the requirements of Executive Order 12372 (Intergovernmental Review of Federal Programs) and the regulations in 34 CFR part 79.

One of the objectives of the Executive Order is to foster an intergovernmental partnership and to strengthen federalism by relying on State and local processes for State and local government coordination and review of proposed Federal financial assistance.

Applicants must contact the appropriate State Single Point of Contact to find out about, and to comply with, the State's process under Executive Order 12372. Applicants proposing to perform activities in more than one State should immediately contact the Single Point of Contact for each of those States and follow the procedures established in each State under the executive order. If you want to know the name and address of any State Single Point of Contact (SPOC), see the list published in the **Federal Register** on April 28, 1999 (64 FR 22963), or you may view the latest SPOC list on the OMB web site at the following address: http://www.whitehouse.gov/omb/grants.

In States that have not established a process or chosen a program for review,

State, area-wide, regional, and local entities, may submit comments directly to the Department.

Any State Process Recommendation and other comments submitted by a State Single Point of Contact and any comments from State, area-wide, regional, and local entities must be mailed or hand-delivered by the date indicated in this notice to the following address: The Secretary, E.O. 12372–CFDA# 84.346, U.S. Department of Education, Room 7E200, Washington, DC 20202–0125.

Proof of mailing will be determined on the same basis as applications (see 34 CFR 75.102). Recommendations or comments may be hand-delivered until 4:30 p.m. (Eastern time) on the date indicated in this notice.

Please note that the above address is not the same address as the one to which the applicant submits its completed application. Do not send applications to the above address.

Instructions for Transmittal of Applications

Applicants are required to submit one original signed application and two copies of the grant application. All forms and assurances must have ink signatures. Please mark applications as ''original'' or ''copy.'' To aid with the review of applications, the Department encourages applicants to submit four additional copies of the grant application. The Department will not penalize applicants who do not provide additional copies.

(a) If an applicant wants to apply for a grant under this process, the applicant must either—

(1) Mail the original and two copies of the application on or before the deadline date to: U.S. Department of Education, Application Control Center, Attention: (CFDA# 84.346), Washington, D.C. 20202–4725, or

(2) Hand deliver the original and two copies of the application by 4:30 p.m. (Washington, D.C. time) on or before the deadline date to: U.S. Department of Education, Application Control Center, Attention: (CFDA #84.346), Room #3633, Regional Office Building #3, 7th and D Streets, S.W., Washington, D.C.

(b) An applicant must show one of the following as proof of mailing:

(1) A legibly dated U.S. Postal Service postmark.

(2) A legible mail receipt with the date of mailing stamped by the U.S. Postal Service.

(3) A dated shipping label, invoice, or receipt from a commercial carrier.

(4) Any other proof of mailing acceptable to the Secretary.

(c) If an application is mailed through the U.S. Postal Service, the Secretary does not accept either of the following as proof of mailing:

(1) A private metered postmark.

(2) A mail receipt that is not dated by the U.S. Postal Service.

Notes: (1) The U.S. Postal Service does not uniformly provide a dated postmark. Before relying on this method, an applicant should check with its local post office.

(2) The Application Control Center will mail a Grant Application Receipt Acknowledgment to each applicant. If an applicant fails to receive the notification of application receipt within 15 days from the date of mailing the application, the applicant should call the U.S. Department of Education Application Control Center at (202) 708–9494.

(3) The applicant *must* indicate on the envelope and—if not provided by the Department—in Item 10 of the Application for Federal Education Assistance (ED 424) the CFDA number—and suffix letter, if any—of the process under which the application is being submitted.

Application Instructions and Forms

All forms and instructions are included at the end of this notice. Questions and answers pertaining to this program are included, as Appendix B, to assist potential applicants.

To apply for an award under this program, your application must be organized in the following order and include the following five parts. The parts and additional materials are as follows (See application forms and instructions at the end of this notice):

(1) Application for Federal Education Assistance (ED 424 (Rev. 1/12/99)) and instructions.

(2) Budget Information—Non-Construction Programs (ED Form No. 524) and instructions.

(3) Budget Narrative.

(4) Program Narrative.

(5) Additional Assurances and Certifications:

a. Assurances—Non-Construction Programs (Standard Form 424B).

b. Certification regarding Lobbying, Debarment, Suspension, and Other Responsibility Matters; and Drug-Free Workplace Requirements (ED 80–0013) and instructions.

c. Certification regarding Debarment, Suspension, Ineligibility and Voluntary Exclusion: Lower Tier Covered Transactions (ED Form 80–0014, 9/90) and instructions.

Note: ED Form 80–0014 is intended for the use of grantees and should not be transmitted to the Department.)

d. Disclosure of Lobbying Activities (Standard Form LLL) (if applicable) and instructions. This document has been marked to reflect statutory changes. See the notice published by the Office of Management and Budget at 61 FR 1413 (January 19, 1996).

No grant may be awarded unless a completed application form has been received.

FOR FURTHER INFORMATION CONTACT: Dr. Marcel R. DuVall, Division of Vocational-Technical Education, Office of Vocational and Adult Education, U.S. Department of Education, 400 Maryland Avenue, S.W. (Room 4317, Mary E. Switzer Building), Washington, D.C. 20202–7241. Telephone (202) 260–4982. Individuals who use a telecommunications device for the deaf (TDD) may call the Federal Information Relay Service (FIRS) at 1–800–877–8339 between 8 a.m. and 8 p.m. Eastern time, Monday through Friday. Individuals with disabilities may obtain this notice in an alternate format (*e.g.*, Braille, large print, audiotape, or computer diskette) on request to the contact persons listed at the beginning of this paragraph. Please note, however, that the Department is not able to reproduce in an alternate format the standard forms included in the notice.

Electronic Access to This Department

Anyone may view this document, as well as all other Department of Education documents published in the **Federal Register**, in text or portable document format (pdf) on the World Wide Web at either of the following sites:

http://ocfo.ed.gov/fedreg.htm
http://www.ed.gov/news.html

To use the pdf you must have the Adobe Acrobat Reader Program with Search, which is available free at either of the preceding sites. If you have questions about using the pdf, call the U.S. Government Printing Office toll free at 1–888–293–6498.

Additionally, this notice, as well as other documents concerning the implementation of the Carl D. Perkins Vocational and Technical Education Act of 1998, is available on the World Wide Web at the following site: http://www.ed.gov/offices/OVAE/VocEd/InfoBoard/legis.html.

Note: The official version of this document is the document published in the **Federal Register**.

Program Authority: 20 U.S.C. 2328.

Dated: May 9, 2000.

Robert Muller,

Acting Assistant Secretary for Vocational and Adult Education.

Appendix A—Sixteen Career Areas Definitions

(a) *Agriculture and Natural Resources*, comprised of courses and/or programs

related to planning, managing and performing agricultural production and horticulture and landscaping services and related professional and technical services, mining and extraction operations, and managing and conserving natural resources and related environmental services;

(b) *Construction*, comprised of courses and/or programs relating to designing, planning, managing, building, and maintaining physical structures and the larger building environment including roadways and bridges and industrial, commercial and residential facilities and buildings;

(c) *Manufacturing*, comprised of courses and/or programs related to planning, managing and performing the processing of materials into intermediate or final products and related professional and technical support activities such as production planning and control, maintenance and manufacturing/process engineering;

(d) *Logistics, Transportation and Distribution Services*, comprised of courses and/or programs related to planning, management, and movement of people, materials, and goods by road, pipeline, air, rail and water and related professional and technical support services such as transportation infrastructure planning and management, logistics services, mobile equipment and facility maintenance;

(e) *Information Technology Services*, comprised of courses and/or programs related to designing, developing, managing and operating communication and information technology networks and related hardware and software for the recording, storage, transformation, transmission and distribution of voice, video, images, and data including both telecommunications and computing services;

(f) *Wholesale/Retail Sales and Services*, comprised of courses and/or programs related to planning, managing and performing wholesaling and retailing services and related marketing and distribution support services including merchandise/product management and promotion;

(g) *Financial Services*, comprised of courses and/or programs related to planning, managing and providing banking, investment, financial planning, and insurance services;

(h) *Hospitality and Tourism*, comprised of courses and/or programs related to hospitality and tourism and to planning, managing and providing lodging, food, recreation, convention and tourism, and related planning and support services such as travel-related services;

(i) *Business and Services*, comprised of courses and/or programs related to planning, managing, and providing administrative support, information processing, accounting, and human resource management services and related management support services;

(j) *Health Services,* comprised of courses and/or programs related to planning, managing, and providing diagnostic, therapeutic, and information and environmental services in health care; exhibiting, performing, writing, and publishing multimedia content, including visual and performing arts and design, journalism, and entertainment services;

(k) *Human Services,* comprised of courses and/or programs related to planning, managing, and providing human services including social and related community services;

(l) *Arts And Communications Services,* comprised of courses and/or programs related to designing, producing, exhibiting, performing, writing, and publishing multimedia content, including visual and performing arts and design, journalism, and entertainment services;

(m) *Legal And Protective Services,* comprised of courses and/or programs related to planning, managing and providing judicial, legal, and protective services, including professional and technical support services in the fire protection and criminal justice systems;

(n) *Scientific Research And Technical Services,* comprised of courses and/or programs related to planning, managing, and providing scientific research and professional and technical services (e.g., physical science, social science, engineering), including laboratory and testing services, and research and development services;

(o) *Education And Training Services,* comprised of courses and/or programs related to planning, managing and providing education and training services, and related learning support services, including assessment and library and information services; and

(p) *Public Administration/Government Services,* comprised of courses and/or programs related to planning, managing and providing government, legislative, administrative and regulatory services and related general purpose government services at the Federal, State and local levels.

Appendix B—Questions and Answers

Potential applicants frequently direct questions to officials of the Department regarding application notices and programmatic and administrative regulations governing various direct grant programs. To assist potential applicants, the Department has assembled the following most commonly asked questions followed by the Department's answers.

Q. Can we get an extension of the deadline?

A. No. A closing date may be changed only under extraordinary circumstances. Any change must be announced in the **Federal Register** and must apply to all applications. Waivers for individual applications cannot be granted regardless of the circumstances.

Q. How many copies of the application should I submit and must they be bound?

A. Applicants are required to submit one original and two copies of the grant application. To aid with the review of applications, the Department encourages applicants to submit four additional copies of the grant application. The Department will not penalize applicants who do not provide additional copies. Sending applications in notebooks, binders, folders, or other coverings is strongly discouraged.

Q. We just missed the deadline for the XXX competition. May we submit under another competition?

A. Yes, however, the likelihood of success is not good. A properly prepared application must meet the specifications of the competition to which it is submitted.

Q. I'm not sure which competition is most appropriate for my project. What should I do?

A. We are happy to discuss any such questions with you and provide clarification on the unique elements of the various competitions.

Q. Will you help us prepare our application?

A. We are happy to provide general program information. Clearly, it would not be appropriate for staff to participate in the actual writing of an application, but we can respond to specific questions about application requirements, evaluation criteria, and the priorities. Applicants should understand, however, that prior contact with the Department is not required, nor will it in any way influence the success of an application.

Q. When will I find out if I'm going to be funded?

A. You can expect to receive notification as soon as possible after the application closing date, depending on the number of applications received and the number of Department competitions with similar closing dates.

Q. Once my application has been reviewed by the review panel, can you tell me the outcome?

A. No. Every year we are called by a number of applicants who have a legitimate reason for needing to know the outcome of the panel review prior to official notification. Some applicants need to make job decisions, some need to notify a local school district, etc. Regardless of the reason, because final funding decisions have not been made at that point, we cannot share information about the results of panel review with anyone.

Q. Will my application be returned if I am not funded?

A. No. We no longer return unsuccessful applications. Thus, applicants should retain at least one copy of the application.

Q. Can I obtain copies of reviewers' comments?

A. Upon written request, reviewers' comments will be mailed to unsuccessful applicants.

Q. Is travel allowed under these projects?

A. Travel associated with carrying out the project is allowed. Because we may

request the project director of funded projects to attend an annual project directors' meeting, you may also wish to include a trip or two to Washington, DC in the travel budget. Travel to conferences is sometimes allowed when the purpose of the conference will be of benefit and relates to the project.

Q. If my application receives high scores from the reviewers, does that mean that I will receive funding?

A. Not necessarily. It is often the case that the number of applications scored highly by the reviewers exceeds the dollars available for funding projects under a particular competition. The order of selection, which is based on the scores of all the applications reviewed and other relevant factors, determines the applications that can be funded.

Q. What happens during pre-award clarification discussions?

A. During pre-award clarification discussions, technical and budget issues may be raised. These are issues that have been identified during the panel and staff reviews that require clarification. Sometimes issues are stated as ''conditions.'' These are issues that have been identified as so critical that the award cannot be made unless those conditions are met. Questions may also be raised about the proposed budget. Generally, these issues are raised because an application contains inadequate justification or explanation of a particular budget item, or because the budget item seems unimportant to the successful completion of the project. If you are asked to make changes that you feel could seriously affect the project's success, you may provide reasons for not making the changes or provide alternative suggestions. Similarly, if proposed budget reductions will, in your opinion, seriously affect the project activities, you may explain why and provide additional justification for the proposed expenses. An award cannot be made until all issues under discussion have been resolved.

Q. How do I provide an assurance?

A. Except for SF–424B, ''Assurances—Non-Construction Programs,'' you may provide an assurance simply by stating in writing that you are meeting a prescribed requirement.

Q. Where can copies of the **Federal Register**, program regulations, and Federal statutes be obtained?

A. Copies of these materials can usually be found at your local library. If not, they can be obtained from the Government Printing Office by writing to Superintendent of Documents, U.S. Government Printing Office, Washington, DC 20402. Telephone: (202) 708–8228. When requesting copies of regulations or statutes, it is helpful to use the specific name or public law, number of a statute, or part number of a regulation. The material referenced in this notice should be referred to as follows:

(a) The Carl D. Perkins Vocational Technical Education Act of 1998 (Pub. L. 105–332) may be obtained (1) from the Government Printing Office by writing to Superintendent of Documents, P.O. Box 371954, Pittsburgh, PA 15250–7954 or telephoning (202) 512–1800, or (2) online from the Library of Congress at Http://thomas.loc.gov.

(b) A copy of the Code of Federal Regulations that contains the Education Department General Administrative Regulations, 34 CFR parts 74, 75, 77, 79, 80, 81, 82, 85, 86, 97, 98, and 99, may be obtained from the Government Printing Office Government Printing Office by writing to Superintendent of Documents, P.O. Box 371954, Pittsburgh, PA 15250–7954 or telephoning (202) 512–1800, or (2) on the internet at: http://www.access.gpo.gov/su docs or *http://www.access.gpo.gov/nara/cfr.*

(c) **Federal Register** notices can also be accessed on the internet at: *http://www.access.gpo.gov/nara/index.html.*

Estimated Burden Statement

According to the Paperwork Reduction Act of 1995, no persons are required to respond to a collection of information unless it displays a valid OMB control number. The valid OMB control number for this information collection is 1830–0541. (Expiration date: 05/31/2003). The time required to complete this information collection is estimated to average 36 hours per response, including the time to review instructions, search existing data resources, gather the data needed, and complete and review the information collection.

If you have any comments concerning the accuracy of the time estimate(s) or suggestions for improving this grant application, please write to: U.S. Department of Education, Washington, D.C. 20202–4651.

If you have comments or concerns regarding the status of your individual submission of this grant application, write directly to: Dr. Marcel R. DuVall, Division of Vocational and Technical Education, Office of Vocational and Adult Education, U.S. Department of Education, 400 Maryland Avenue, S.W. (Room 4325, Mary E. Switzer Building), Washington D.C. 20202–7242.

Instructions for Budget Information

Sections A and B—Budget Summary by Categories

1. *Personnel:* Show salaries to be paid to personnel for each budget year.

2. *Fringe Benefits:* Indicate the rate and amount of fringe benefits for each budget year.

3. *Travel:* Indicate the amount requested for both local and out of State travel of Project Staff for each budget year. Include funds for at least two trips per year for two people to attend the Project Directors' Workshop.

4. *Equipment:* Indicate the cost of non-expendable personal property that has a cost of $5,000 or more per unit for each budget year.

5. *Supplies:* Include the cost of consumable supplies and materials to be used during the project period for each budget year.

6. *Contractual:* Show the amount to be used for: (1) procurement contracts (except those which belong on other lines such as supplies and equipment); and (2) subcontracts for each budget year.

7. *Construction:* Not Applicable.

8. *Other:* Indicate all direct costs not clearly covered by lines 1 through 6 above, including consultants and capital expenditures for each budget year.

9. *Total Direct Cost:* Show the total for Lines 1 through 8 for each budget year.

10. *Indirect Costs:* Indicate the rate and amount of indirect costs for each budget year.

11. *Training/stipend Cost:* Not applicable. This item pertains only to student and institutional allowances.

12. *Total Costs: S*how total for lines 9 through 11 for each budget year.

Instructions for Budget Narrative

The budget narrative should explain, justify, and, if needed, clarify your budget summary. For each line item (personnel, fringe benefits, travel, etc.) in your budget, explain why it is there and how you computed the costs.

Please limit this section to no more than five pages. Be sure that each page of your application is numbered consecutively.

Instructions for Program Narrative

The program narrative will comprise the largest portion of your application. This part is where you spell out the who, what, when, why, and how, of your proposed project.

Although you will not have a form to fill out for your narrative, there is a format. This format is based on the selection criteria. Because your application will be reviewed and rated by a review panel on the basis of the

selection criteria, your narrative should follow the order and format of the criteria.

Before preparing your application, you should carefully read the legislation and EDGAR regulations governing this program, eligibility requirements, priorities, and the selection criteria for this process.

Your program narrative should be clear, concise, and to the point. Begin the narrative with a one page abstract or summary of your project. Then describe the project in detail, addressing each selection criterion in order.

The Secretary strongly suggests that you limit the program narrative to no more than 30 double-spaced, typed pages (on one side only), although the Secretary will consider your application if it is longer. Be sure to number consecutively ALL pages in your application.

You may include supporting documentation as appendices to the program narrative. Be sure that this material is concise and pertinent to this program.

You are advised that—

(a) The Secretary considers only information contained in the application in ranking applications for funding consideration. Letters of support sent separately from the formal application package are not considered in the review by the technical review panels. (34 CFR 75.217)

(b) The technical review panel evaluates each application solely on the basis of the selection criteria contained in this notice.

(c) Letters of support included as appendices to an application, that are of direct relevance to or contain commitments that pertain to the established selection criteria, such as commitment of resources, will be reviewed by the panel. As noted above in paragraph (a), letters of support sent separately from the formal application package are not considered in the review by the technical review panel. (34 CFR 75.217)

Performance Measures

The Government Performance and Results Act of 1993 (GPRA) places new management expectations and requirements on Federal departments and agencies by creating a framework for more effective planning, budgeting, program evaluation, and fiscal accountability for Federal programs. The intent of GPRA is to improve public confidence by holding departments and agencies accountable for achieving program results. Under GPRA, Departments and agencies must clearly describe the goals and objectives of their programs.

As required by GPRA, the Department of Education has prepared a strategic plan for 1998–2002. This plan reflects the Department's priorities and integrates them with its mission and program authorities and describes how the Department will work to improve education for all children and adults in the United States.

standards so that they are prepared for responsible citizenship, further learning, and productive employment. Among the objectives for Goal 1 is that schools help all students make successful transitions to college and careers.

Factors that may be considered in evaluating the success of the program may include:

(1) Number of people trained by the career resource grant recipient;

(2) Improved and expanded use of career development products and services; and

(3) Number of students who had access to career development products and services.

An evaluation plan must be included in each Career Resource Network grant. The application should describe the plan in detail including the following information: (1) What types of data will be collected; (2) what instruments will be used; (3) when reports of results and outcomes will become available; and (4) how information will be used by the project to monitor progress and to provide accountability information to stakeholders.

BILLING CODE 4000–01–U

OMB Control No. 1801-0004 (Exp. 8/31/2001)

NOTICE TO ALL APPLICANTS

The purpose of this enclosure is to inform you about a new provision in the Department of Education's General Education Provisions Act (GEPA) that applies to applicants for new grant awards under Department programs. This provision is Section 427 of GEPA, enacted as part of the Improving America's Schools Act of 1994 (Pub. L. 103-382).

To Whom Does This Provision Apply?

Section 427 of GEPA affects applicants for new grant awards under this program. **ALL APPLICANTS FOR NEW AWARDS MUST INCLUDE INFORMATION IN THEIR APPLICATIONS TO ADDRESS THIS NEW PROVISION IN ORDER TO RECEIVE FUNDING UNDER THIS PROGRAM.**

(If this program is a State-formula grant program, a State needs to provide this description only for projects or activities that it carries out with funds reserved for State-level uses. In addition, local school districts or other eligible applicants that apply to the State for funding need to provide this description in their applications to the State for funding. The State would be responsible for ensuring that the school district or other local entity has submitted a sufficient section 427 statement as described below.)

What Does This Provision Require?

Section 427 requires each applicant for funds (other than an individual person) to include in its application a description of the steps the applicant proposes to take to ensure equitable access to, and participation in, its Federally-assisted program for students, teachers, and other program beneficiaries with special needs. This provision allows applicants discretion in developing the required description. The statute highlights six types of barriers that can impede equitable access or participation: gender, race, national origin, color, disability, or age. Based on local circumstances, you should determine whether these or other barriers may prevent your students, teachers, etc. from such access or participation in, the Federally-funded project or activity. The description in your application of steps to be taken to overcome these barriers need not be lengthy; you may provide a clear and succinct description of how you plan to address those barriers that are applicable to your circumstances. In addition, the information may be provided in a single narrative, or, if appropriate, may be discussed in connection with related topics in the application.

Section 427 is not intended to duplicate the requirements of civil rights statutes, but rather to ensure that, in designing their projects, applicants for Federal funds address equity concerns that may affect the ability of certain potential beneficiaries to fully participate in the project and to achieve to high standards. Consistent with program requirements and its approved application, an applicant may use the Federal funds awarded to it to eliminate barriers it identifies.

What are Examples of How an Applicant Might Satisfy the Requirement of This Provision?

The following examples may help illustrate how an applicant may comply with Section 427.

(1) An applicant that proposes to carry out an adult literacy project serving, among others, adults with limited English proficiency, might describe in its application how it intends to distribute a brochure about the proposed project to such potential participants in their native language.

(2) An applicant that proposes to develop instructional materials for classroom use might describe how it will make the materials available on audio tape or in braille for students who are blind.

(3) An applicant that proposes to carry out a model science program for secondary students and is concerned that girls may be less likely than boys to enroll in the course, might indicate how it intends to conduct "outreach" efforts to girls, to encourage their enrollment.

We recognize that many applicants may already be implementing effective steps to ensure equity of access and participation in their grant programs, and we appreciate your cooperation in responding to the requirements of this provision.

Estimated Burden Statement for GEPA Requirements

The time required to complete this information collection is estimated to vary from 1 to 3 hours per response, with an average of 1.5 hours, including the time to review instructions, search existing data resources, gather and maintain the data needed, and complete and review the information collection. **If you have any comments concerning the accuracy of the time estimate(s) or suggestions for improving this form, please write to**: U.S. Department of Education, Washington, DC 20202-4651.

Application for Federal Education Assistance

Note: If available, please provide application package on diskette and specify the file format.

U.S. Department of Education

Form Approved
OMB No. 1875-0106
Exp. 06/30/2001

Applicant Information

1. Name and Address
Legal Name:
Address:
City State County ZIP Code + 4

Organizational Unit

2. Applicant's D-U-N-S Number
3. Applicant's T-I-N -
4. Catalog of Federal Domestic Assistance #: 8 4 ➡ Title:
5. Project Director:
Address:
City State ZIP Code + 4
Tel. #: ( ) - Fax #: ( ) -
E-Mail Address:
6. Is the applicant delinquent on any Federal debt? ☐ Yes ☐ No
(If "Yes," attach an explanation.)
7. Type of Applicant *(Enter appropriate letter in the box.)*

A State	H Independent School District
B County	I Public College or University
C Municipal	J Private, Non-Profit College or University
D Township	K Indian Tribe
E Interstate	L Individual
F Intermunicipal	M Private, Profit-Making Organization
G Special District	N Other *(Specify)*:

8. Novice Applicant ☐ Yes ☐ No

Application Information

9. Type of Submission:

—PreApplication	*—Application*
☐ Construction	☐ Construction
☐ Non-Construction	☐ Non-Construction

10. Is application subject to review by Executive Order 12372 process?
☐ Yes *(Date made available to the Executive Order 12372 process for review):* ___/___/___
☐ No *(If "No," check appropriate box below.)*
☐ Program is not covered by E.O. 12372.
☐ Program has not been selected by State for review.

11. Proposed Project Dates: Start Date: ___/___/___ End Date: ___/___/___

12. Are any research activities involving human subjects planned at any time during the proposed project period? ☐ Yes ☐ No
a. If "Yes," Exemption(s) #: *OR* b. Assurance of Compliance #:
c. IRB approval date: ☐ Full IRB or ☐ Expedited Review

13. Descriptive Title of Applicant's Project:

Estimated Funding

14a. Federal	$	.00
b. Applicant	$	.00
c. State	$	.00
d. Local	$	.00
e. Other	$	.00
f. Program Income	$	.00
g. TOTAL	$	.00

Authorized Representative Information

15. To the best of my knowledge and belief, all data in this preapplication/application are true and correct. The document has been duly authorized by the governing body of the applicant and the applicant will comply with the attached assurances if the assistance is awarded.

a. Typed Name of Authorized Representative
b. Title
c. Tel. #: ( ) - Fax #: ( ) -
d. E-Mail Address:
e. Signature of Authorized Representative Date: ___/___/___

REV. 11/12/99 ED 424

Instructions for ED 424

1. **Legal Name and Address.** Enter the legal name of applicant and the name of the primary organizational unit which will undertake the assistance activity.

2. **D-U-N-S Number.** Enter the applicant's D-U-N-S Number. If your organization does not have a D-U-N-S Number, you can obtain the number by calling 1-800-333-0505or by completing a D-U-N-S Number Request Form. The form can be obtained via the Internet at the following URL: **http://www.dnb.com/dbis/aboutdb/intlduns.htm.**

3. **Tax Identification Number.** Enter the tax identification number as assigned by the Internal Revenue Service.

4. **Catalog of Federal Domestic Assistance (CFDA) Number.** Enter the CFDA number and title of the program under which assistance is requested.

5. **Project Director.** Name, address, telephone and fax numbers, and e-mail address of the person to be contacted on matters involving this application.

6. **Federal Debt Delinquency.** Check **"Yes"** if the applicant's organization is delinquent on any Federal debt. (This question refers to the applicant's organization and not to the person who signs as the authorized representative. Categories of debt include delinquent audit disallowances, loans and taxes.) Otherwise, check **"No."**

7. **Type of Applicant.** Enter the appropriate letter in the box provided.

8. **Novice Applicant.** Check **"Yes"** only if assistance is being requested under a program that gives special consideration to novice applicants and you meet the program requirements for novice applicants. By checking "Yes" the applicant certifies that it meets the novice applicant requirements specified by ED. Otherwise, check **"No."**

9. **Type of Submission.** Self-explanatory.

10. **Executive Order 12372.** Check **"Yes"** if the application is subject to review by Executive Order 12372. Also, please enter the month, date, and four (4) digit year (e.g., 12/12/2000). Applicants should contact the State Single Point of Contact (SPOC) for Federal Executive Order 12372 to determine whether the application is subject to the State intergovernmental review process. Otherwise, check **"No."**

11. **Proposed Project Dates.** Please enter the month, date, and four (4) digit year (e.g., 12/12/2000).

12. **Human Subjects.** Check "Yes" **or** "No". If research activities involving human subjects are **not** planned **at any time** during the proposed project period, check **"No." The remaining parts of item 12 are then not applicable.**

    If research activities involving human subjects, whether or not exempt from Federal regulations for the protection of human subjects, **are** planned **at any time** during the proposed project period, either at the applicant organization or at any other performance site or collaborating institution, check **"Yes."** If **all** the research activities are designated to be exempt under the regulations, enter, in item 12a, the exemption number(s) corresponding to one or more of the six exemption categories listed in **"Protection of Human Subjects in Research"** attached to this form. Provide sufficient information in the application to allow a determination that the designated exemptions in item 12a, are appropriate. **Provide this narrative information in an "Item 12/Protection of Human Subjects Attachment" and insert this attachment immediately following the ED 424 face page. Skip the remaining parts of item 12.**

    If **some or all** of the planned research activities involving human subjects are covered (nonexempt), skip item 12a and continue with the remaining parts of item 12, as noted below. In addition, follow the instructions in **"Protection of Human Subjects in Research"** attached to this form to prepare the six-point narrative about the nonexempt activities. **Provide this six-point narrative in an "Item 12/Protection of Human Subjects Attachment" and insert this attachment immediately following the ED 424 face page.**

    If the applicant organization has an approved Multiple Project Assurance of Compliance on file with the Grants Policy and Oversight Staff (GPOS), U.S. Department of Education, or with the Office for Protection from Research Risks (OPRR), National Institutes of Health, U.S. Department of Health and Human Services, that covers the specific activity, enter the Assurance number in item 12b and the date of approval by the Institutional Review Board (IRB) of the proposed activities in item 12c. This date must be no earlier than one year before the receipt date for which the application is submitted and must include the four (4) digit year (e.g., 2000). Check the type of IRB review in the appropriate box. An IRB may use the expedited review procedure if it complies with the requirements of 34 CFR 97.110. If the IRB review is delayed beyond the submission of the application, enter **"Pending"** in item 12c. If your application is recommended/selected for funding, a follow-up certification of IRB approval from an official signing for the applicant organization must be sent to and received by the designated ED official within 30 days after a specific formal request from the designated ED official. **If the applicant organization does not have** on file with GPOS or OPRR **an approved Assurance of Compliance** that covers the proposed research activity, enter **"None"** in item 12b and skip 12c. In this case, the applicant organization, by the signature on the application, is declaring that it will comply with 34 CFR 97 within 30 days after a specific formal request from the designated ED official for the Assurance(s) and IRB certifications.

13. **Project Title.** Enter a brief descriptive title of the project. If more than one program is involved, you should append an explanation on a separate sheet. If appropriate (e.g., construction or real property projects), attach a map showing project location. For preapplications, use a separate sheet to provide a summary description of this project.

14. **Estimated Funding.** Amount requested or to be contributed during the first funding/budget period by each contributor. Value of in-kind contributions should be included on appropriate lines as applicable. If the action will result in a dollar change to an existing award, indicate **only** the amount of the change. For decreases, enclose the amounts in parentheses. If both basic and supplemental amounts are included, show breakdown on an attached sheet. For multiple program funding, use totals and show breakdown using same categories as item 14.

15. **Certification.** To be signed by the authorized representative of the applicant. A copy of the governing body's authorization for you to sign this application as official representative must be on file in the applicant's office.

    Be sure to enter the telephone and fax number and e-mail address of the authorized representative. Also, in item 15e, please enter the month, date, and four (4) digit year (e.g., 12/12/2000) in the date signed field.

Paperwork Burden Statement

According to the Paperwork Reduction Act of 1995, no persons are required to respond to a collection of information unless such collection displays a valid OMB control number. The valid OMB control number for this information collection is **1875-0106**. The time required to complete this information collection is estimated to average between 15 and 45 minutes per response, including the time to review instructions, search existing data resources, gather the data needed, and complete and review the information collection. **If you have any comments concerning the accuracy of the estimate(s) or suggestions for improving this form, please write to:** U.S. Department of Education, Washington, D.C. 20202-4651. **If you have comments or concerns regarding the status of your individual submission of this form write directly to:** Joyce I. Mays, Application Control Center, U.S. Department of Education, 7th and D Streets, S.W. ROB-3, Room 3633, Washington, D.C. 20202-4725.

PROTECTION OF HUMAN SUBJECTS IN RESEARCH (Attachment to ED 424)

I. Instructions to Applicants about the Narrative Information that Must be Provided if Research Activities Involving Human Subjects are Planned

If you marked item 12 on the application "Yes" and designated exemptions in 12a, **(all research activities are exempt),** provide sufficient information in the application to allow a determination that the designated exemptions are appropriate. Research involving human subjects that is exempt from the regulations is discussed under **II.B. "Exemptions,"** below. The Narrative must be succinct. **Provide this information in an "Item 12/Protection of Human Subjects Attachment" and insert this attachment immediately following the ED 424 face page.**

If you marked "Yes" to item 12 on the face page, and designated no exemptions from the regulations **(some or all of the research activities are nonexempt),** address the following six points for each nonexempt activity. In addition, if research involving human subjects will take place at collaborating site(s) or other performance site(s), provide this information before discussing the six points. Although no specific page limitation applies to this section of the application, be succinct. Provide the six-point narrative and discussion of other performance sites in an **"Item 12/Protection of Human Subjects Attachment" and insert this attachment immediately following the ED 424 face page.**

(1) Provide a detailed description of the proposed involvement of human subjects. Describe the characteristics of the subject population, including their anticipated number, age range, and health status. Identify the criteria for inclusion or exclusion of any subpopulation. Explain the rationale for the involvement of special classes of subjects, such as children, children with disabilities, adults with disabilities, persons with mental disabilities, pregnant women, prisoners, institutionalized individuals, or others who are likely to be vulnerable.

(2) Identify the sources of research material obtained from individually identifiable living human subjects in the form of specimens, records, or data. Indicate whether the material or data will be obtained specifically for research purposes or whether use will be made of existing specimens, records, or data.

(3) Describe plans for the recruitment of subjects and the consent procedures to be followed. Include the circumstances under which consent will be sought and obtained, who will seek it, the nature of the information to be provided to prospective subjects, and the method of documenting consent. State if the Institutional Review Board (IRB) has authorized a modification or waiver of the elements of consent or the requirement for documentation of consent.

(4) Describe potential risks (physical, psychological, social, legal, or other) and assess their likelihood and seriousness. Where appropriate, describe alternative treatments and procedures that might be advantageous to the subjects.

(5) Describe the procedures for protecting against or minimizing potential risks, including risks to confidentiality, and assess their likely effectiveness. Where appropriate, discuss provisions for ensuring necessary medical or professional intervention in the event of adverse effects to the subjects. Also, where appropriate, describe the provisions for monitoring the data collected to ensure the safety of the subjects.

(6) Discuss why the risks to subjects are reasonable in relation to the anticipated benefits to subjects and in relation to the importance of the knowledge that may reasonably be expected to result.

II. Information on Research Activities Involving Human Subjects

A. Definitions.

A research activity involves human subjects if the activity is research, as defined in the Department's regulations, and the research activity will involve use of human subjects, as defined in the regulations.

—Is it a research activity?

The ED Regulations for the Protection of Human Subjects, Title 34, Code of Federal Regulations, Part 97, define research as "a systematic investigation, including research development, testing and evaluation, designed to develop or contribute to generalizable knowledge." *If an activity follows a deliberate plan whose purpose is to develop or contribute to generalizable knowledge, such as an exploratory study or the collection of data to test a hypothesis, it is research.* Activities which meet this definition constitute research whether or not they are conducted or supported under a program which is considered research for other purposes. For example, some demonstration and service programs may include research activities.

—Is it a human subject?

The regulations define human subject as "a living individual about whom an investigator (whether professional or student) conducting research obtains (1) data through intervention or interaction with the individual, or (2) identifiable private information." *(1) If an activity involves obtaining information about a living person by manipulating that person or that person's environment, as might occur when a new instructional technique is tested, or by communicating or interacting with the individual, as occurs with surveys and interviews, the definition of human subject is met. (2) If an activity involves obtaining private information about a living person in such a way that the information can be linked to that individual (the identity of the subject is or may be readily determined by the investigator or associated with the information), the definition of human subject is met.* [Private information includes information about behavior that occurs in a context in which an individual can reasonably expect that no observation or recording is taking place, and information which has been provided for specific purposes by an individual and which the individual can reasonably expect will not be made public (for example, a school health record).]

B. Exemptions.

Research activities in which the only involvement of human subjects will be in one or more of the following six categories of ***exemptions*** are not covered by the regulations:

(1) Research conducted in established or commonly accepted educational settings, involving normal educational practices, such as (a) research on regular and special education instructional strategies, or (b) research on the effectiveness of or the comparison among instructional techniques, curricula, or classroom management methods.

(2) Research involving the use of educational tests (cognitive, diagnostic, aptitude, achievement), survey procedures, interview procedures or observation of public behavior, unless: (a) information obtained is recorded in such a manner that human subjects can be identified, directly or through identifiers linked to the subjects; and (b) any disclosure of the human subjects' responses outside the research could reasonably place the subjects at risk of criminal or civil liability or be damaging to the subjects' financial standing, employability, or reputation. ***If the subjects are children, this exemption applies only to research involving educational tests or observations of public behavior when the investigator(s) do not participate in the activities being observed.*** [Children are defined as persons who have not attained the legal age for consent to treatments or procedures involved in the research, under the applicable law or jurisdiction in which the research will be conducted.]

(3) Research involving the use of educational tests (cognitive, diagnostic, aptitude, achievement), survey procedures, interview procedures or observation of public behavior that is not exempt under section (2) above, if the human subjects are elected or appointed public officials or candidates for public office; or federal statute(s) require(s) without exception that the confidentiality of the personally identifiable information will be maintained throughout the research and thereafter.

(4) Research involving the collection or study of existing data, documents, records, pathological specimens, or diagnostic specimens, if these sources are publicly available or if the information is recorded by the investigator in a manner that subjects cannot be identified, directly or through identifiers linked to the subjects.

(5) Research and demonstration projects which are conducted by or subject to the approval of department or agency heads, and which are designed to study, evaluate, or otherwise examine: (a) public benefit or service programs; (b) procedures for obtaining benefits or services under those programs; (c) possible changes in or alternatives to those programs or procedures; or (d) possible changes in methods or levels of payment for benefits or services under those programs.

(6) Taste and food quality evaluation and consumer acceptance studies, (a) if wholesome foods without additives are consumed or (b) if a food is consumed that contains a food ingredient at or below the level and for a use found to be safe, or agricultural chemical or environmental contaminant at or below the level found to be safe, by the Food and Drug Administration or approved by the Environmental Protection Agency or the Food Safety and Inspection Service of the U.S Department of Agriculture.

Copies of the Department of Education's Regulations for the Protection of Human Subjects, 34 CFR Part 97 and other pertinent materials on the protection of human subjects in research are available from the Grants Policy and Oversight Staff (GPOS) Office of the Chief Financial and Chief Information Officer, U.S. Department of Education, Washington, D.C., telephone: (202) 708-8263, and on the U.S. Department of Education's Protection of Human Subjects in Research Web Site at http://ocfo.ed.gov/humansub.htm.

U.S. DEPARTMENT OF EDUCATION

BUDGET INFORMATION

NON-CONSTRUCTION PROGRAMS

OMB Control Number: 1890-0004

Expiration Date: 02/28/2003

Name of Institution/Organization

Applicants requesting funding for only one year should complete the column under "Project Year 1." Applicants requesting funding for multi-year grants should complete all applicable columns. Please read all instructions before completing form.

SECTION A - BUDGET SUMMARY
U.S. DEPARTMENT OF EDUCATION FUNDS

Budget Categories	Project Year 1 (a)	Project Year 2 (b)	Project Year 3 (c)	Project Year 4 (d)	Project Year 5 (e)	Total (f)
1. Personnel						
2. Fringe Benefits						
3. Travel						
4. Equipment						
5. Supplies						
6. Contractual						
7. Construction						
8. Other						
9. Total Direct Costs (lines 1-8)						
10. Indirect Costs						
11. Training Stipends						
12. Total Costs (lines 9-11)						

ED Form No. 524

Name of Institution/Organization	Applicants requesting funding for only one year should complete the column under "Project Year 1." Applicants requesting funding for multi-year grants should complete all applicable columns. Please read all instructions before completing form.

SECTION B - BUDGET SUMMARY
NON-FEDERAL FUNDS

Budget Categories	Project Year 1 (a)	Project Year 2 (b)	Project Year 3 (c)	Project Year 4 (d)	Project Year 5 (e)	Total (f)
1. Personnel						
2. Fringe Benefits						
3. Travel						
4. Equipment						
5. Supplies						
6. Contractual						
7. Construction						
8. Other						
9. Total Direct Costs (lines 1-8)						
10. Indirect Costs						
11. Training Stipends						
12. Total Costs (lines 9-11)						

SECTION C - OTHER BUDGET INFORMATION (see instructions)

ED Form No. 524

Public reporting burden for this collection of information is estimated to vary from 13 to 22 hours per response, with an average of 17.5 hours per response, including the time reviewing instructions, searching existing data sources, gathering and maintaining the data needed, and completing and reviewing the collection of information. Send comments regarding this burden estimate or any other aspect of this collection of information, including suggestions for reducing this burden, to the U.S. Department of Education, Information Management and Compliance Division, Washington, D.C. 20202-4651; and the Office of Management and Budget, Paperwork Reduction Project 1875-0102, Washington DC 20503.

INSTRUCTIONS FOR ED FORM 524

General Instructions

This form is used to apply to individual U.S. Department of Education discretionary grant programs. Unless directed otherwise, provide the same budget information for each year of the multi-year funding request. Pay attention to applicable program specific instructions, if attached.

Section A - Budget Summary
U.S. Department of Education Funds

All applicants must complete Section A and provide a breakdown by the applicable budget categories shown in lines 1-11.

Lines 1-11, columns (a)-(e): For each project year for which funding is requested, show the total amount requested for each applicable budget category.

Lines 1-11, column (f): Show the multi-year total for each budget category. If funding is requested for only one project year, leave this column blank.

Line 12, columns (a)-(e): Show the total budget request for each project year for which funding is requested.

Line 12, column (f): Show the total amount requested for all project years. If funding is requested for only one year, leave this space blank.

Section B - Budget Summary
Non-Federal Funds

If you are required to provide or volunteer to provide matching funds or other non-Federal resources to the project, these should be shown for each applicable budget category on lines 1-11 of Section B.

Lines 1-11, columns (a)-(e): For each project year for which matching funds or other contributions are provided, show the total contribution for each applicable budget category.

Lines 1-11, column (f): Show the multi-year total for each budget category. If non-Federal contributions are provided for only one year, leave this column blank.

Line 12, columns (a)-(e): Show the total matching or other contribution for each project year.

Line 12, column (f): Show the total amount to be contributed for all years of the multi-year project. If non-Federal contributions are provided for only one year, leave this space blank.

Section C - Other Budget Information
Pay attention to applicable program specific instructions, if attached.

1. Provide an itemized budget breakdown, by project year, for each budget category listed in Sections A and B.

2. If applicable to this program, enter the type of indirect rate (provisional, predetermined, final or fixed) that will be in effect during the funding period. In addition, enter the estimated amount of the base to which the rate is applied, and the total indirect expense.

3. If applicable to this program, provide the rate and base on which fringe benefits are calculated.

4. Provide other explanations or comments you deem necessary.

OMB Approval No. 0348-0040

ASSURANCES - NON-CONSTRUCTION PROGRAMS

Public reporting burden for this collection of information is estimated to average 15 minutes per response, including time for reviewing instructions, searching existing data sources, gathering and maintaining the data needed, and completing and reviewing the collection of information. Send comments regarding the burden estimate or any other aspect of this collection of information, including suggestions for reducing this burden, to the Office of Management and Budget, Paperwork Reduction Project (0348-0040), Washington, DC 20503.

PLEASE DO NOT RETURN YOUR COMPLETED FORM TO THE OFFICE OF MANAGEMENT AND BUDGET. SEND IT TO THE ADDRESS PROVIDED BY THE SPONSORING AGENCY.

NOTE: Certain of these assurances may not be applicable to your project or program. If you have questions, please contact the awarding agency. Further, certain Federal awarding agencies may require applicants to certify to additional assurances. If such is the case, you will be notified.

As the duly authorized representative of the applicant, I certify that the applicant:

1. Has the legal authority to apply for Federal assistance and the institutional, managerial and financial capability (including funds sufficient to pay the non-Federal share of project cost) to ensure proper planning, management and completion of the project described in this application.

2. Will give the awarding agency, the Comptroller General of the United States and, if appropriate, the State, through any authorized representative, access to and the right to examine all records, books, papers, or documents related to the award; and will establish a proper accounting system in accordance with generally accepted accounting standards or agency directives.

3. Will establish safeguards to prohibit employees from using their positions for a purpose that constitutes or presents the appearance of personal or organizational conflict of interest, or personal gain.

4. Will initiate and complete the work within the applicable time frame after receipt of approval of the awarding agency.

5. Will comply with the Intergovernmental Personnel Act of 1970 (42 U.S.C. §§4728-4763) relating to prescribed standards for merit systems for programs funded under one of the 19 statutes or regulations specified in Appendix A of OPM's Standards for a Merit System of Personnel Administration (5 C.F.R. 900, Subpart F).

6. Will comply with all Federal statutes relating to nondiscrimination. These include but are not limited to: (a) Title VI of the Civil Rights Act of 1964 (P.L. 88-352) which prohibits discrimination on the basis of race, color or national origin; (b) Title IX of the Education Amendments of 1972, as amended (20 U.S.C. §§1681-1683, and 1685-1686), which prohibits discrimination on the basis of sex; (c) Section 504 of the Rehabilitation Act of 1973, as amended (29 U.S.C. §794), which prohibits discrimination on the basis of handicaps; (d) the Age Discrimination Act of 1975, as amended (42 U.S.C. §§6101-6107), which prohibits discrimination on the basis of age; (e) the Drug Abuse Office and Treatment Act of 1972 (P.L. 92-255), as amended, relating to nondiscrimination on the basis of drug abuse; (f) the Comprehensive Alcohol Abuse and Alcoholism Prevention, Treatment and Rehabilitation Act of 1970 (P.L. 91-616), as amended, relating to nondiscrimination on the basis of alcohol abuse or alcoholism; (g) §§523 and 527 of the Public Health Service Act of 1912 (42 U.S.C. §§290 dd-3 and 290 ee 3), as amended, relating to confidentiality of alcohol and drug abuse patient records; (h) Title VIII of the Civil Rights Act of 1968 (42 U.S.C. §§3601 et seq.), as amended, relating to nondiscrimination in the sale, rental or financing of housing; (i) any other nondiscrimination provisions in the specific statute(s) under which application for Federal assistance is being made; and, (j) the requirements of any other nondiscrimination statute(s) which may apply to the application.

7. Will comply, or has already complied, with the requirements of Titles II and III of the Uniform Relocation Assistance and Real Property Acquisition Policies Act of 1970 (P.L. 91-646) which provide for fair and equitable treatment of persons displaced or whose property is acquired as a result of Federal or federally-assisted programs. These requirements apply to all interests in real property acquired for project purposes regardless of Federal participation in purchases.

8. Will comply, as applicable, with provisions of the Hatch Act (5 U.S.C. §§1501-1508 and 7324-7328) which limit the political activities of employees whose principal employment activities are funded in whole or in part with Federal funds.

9. Will comply, as applicable, with the provisions of the Davis-Bacon Act (40 U.S.C. §§276a to 276a-7), the Copeland Act (40 U.S.C. §276c and 18 U.S.C. §874), and the Contract Work Hours and Safety Standards Act (40 U.S.C. §§327-333), regarding labor standards for federally-assisted construction subagreements.

10. Will comply, if applicable, with flood insurance purchase requirements of Section 102(a) of the Flood Disaster Protection Act of 1973 (P.L. 93-234) which requires recipients in a special flood hazard area to participate in the program and to purchase flood insurance if the total cost of insurable construction and acquisition is $10,000 or more.

11. Will comply with environmental standards which may be prescribed pursuant to the following: (a) institution of environmental quality control measures under the National Environmental Policy Act of 1969 (P.L. 91-190) and Executive Order (EO) 11514; (b) notification of violating facilities pursuant to EO 11738; (c) protection of wetlands pursuant to EO 11990; (d) evaluation of flood hazards in floodplains in accordance with EO 11988; (e) assurance of project consistency with the approved State management program developed under the Coastal Zone Management Act of 1972 (16 U.S.C. §§1451 et seq.); (f) conformity of Federal actions to State (Clean Air) Implementation Plans under Section 176(c) of the Clean Air Act of 1955, as amended (42 U.S.C. §§7401 et seq.); (g) protection of underground sources of drinking water under the Safe Drinking Water Act of 1974, as amended (P.L. 93-523); and, (h) protection of endangered species under the Endangered Species Act of 1973, as amended (P.L. 93-205).

12. Will comply with the Wild and Scenic Rivers Act of 1968 (16 U.S.C. §§1271 et seq.) related to protecting components or potential components of the national wild and scenic rivers system.

13. Will assist the awarding agency in assuring compliance with Section 106 of the National Historic Preservation Act of 1966, as amended (16 U.S.C. §470), EO 11593 (identification and protection of historic properties), and the Archaeological and Historic Preservation Act of 1974 (16 U.S.C. §§469a-1 et seq.).

14. Will comply with P.L. 93-348 regarding the protection of human subjects involved in research, development, and related activities supported by this award of assistance.

15. Will comply with the Laboratory Animal Welfare Act of 1966 (P.L. 89-544, as amended, 7 U.S.C. §§2131 et seq.) pertaining to the care, handling, and treatment of warm blooded animals held for research, teaching, or other activities supported by this award of assistance.

16. Will comply with the Lead-Based Paint Poisoning Prevention Act (42 U.S.C. §§4801 et seq.) which prohibits the use of lead-based paint in construction or rehabilitation of residence structures.

17. Will cause to be performed the required financial and compliance audits in accordance with the Single Audit Act Amendments of 1996 and OMB Circular No. A-133, "Audits of States, Local Governments, and Non-Profit Organizations."

18. Will comply with all applicable requirements of all other Federal laws, executive orders, regulations, and policies governing this program.

SIGNATURE OF AUTHORIZED CERTIFYING OFFICIAL	TITLE

APPLICANT ORGANIZATION	DATE SUBMITTED

Standard Form 424B (Rev. 7-97) Back

CERTIFICATIONS REGARDING LOBBYING; DEBARMENT, SUSPENSION AND OTHER RESPONSIBILITY MATTERS; AND DRUG-FREE WORKPLACE REQUIREMENTS

Applicants should refer to the regulations cited below to determine the certification to which they are required to attest. Applicants should also review the instructions for certification included in the regulations before completing this form. Signature of this form provides for compliance with certification requirements under 34 CFR Part 82, "New Restrictions on Lobbying," and 34 CFR Part 85, "Government-wide Debarment and Suspension (Nonprocurement) and Government-wide Requirements for Drug-Free Workplace (Grants)." The certifications shall be treated as a material representation of fact upon which reliance will be placed when the Department of Education determines to award the covered transaction, grant, or cooperative agreement.

1. LOBBYING

As required by Section 1352, Title 31 of the U.S. Code, and implemented at 34 CFR Part 82, for persons entering into a grant or cooperative agreement over $100,000, as defined at 34 CFR Part 82, Sections 82.105 and 82.110, the applicant certifies that:

(a) No Federal appropriated funds have been paid or will be paid, by or on behalf of the undersigned, to any person for influencing or attempting to influence an officer or employee of any agency, a Member of Congress, an officer or employee of Congress, or an employee of a Member of Congress in connection with the making of any Federal grant, the entering into of any cooperative agreement, and the extension, continuation, renewal, amendment, or modification of any Federal grant or cooperative agreement;

(b) If any funds other than Federal appropriated funds have been paid or will be paid to any person for influencing or attempting to influence an officer or employee of any agency, a Member of Congress, an officer or employee of Congress, or an employee of a Member of Congress in connection with this Federal grant or cooperative agreement, the undersigned shall complete and submit Standard Form - LLL, "Disclosure Form to Report Lobbying," in accordance with its instructions;

(c) The undersigned shall require that the language of this certification be included in the award documents for all subawards at all tiers (including subgrants, contracts under grants and cooperative agreements, and subcontracts) and that all subrecipients shall certify and disclose accordingly.

2. DEBARMENT, SUSPENSION, AND OTHER RESPONSIBILITY MATTERS

As required by Executive Order 12549, Debarment and Suspension, and implemented at 34 CFR Part 85, for prospective participants in primary covered transactions, as defined at 34 CFR Part 85, Sections 85.105 and 85.110—

A. The applicant certifies that it and its principals:

(a) Are not presently debarred, suspended, proposed for debarment, declared ineligible, or voluntarily excluded from covered transactions by any Federal department or agency;

(b) Have not within a three-year period preceding this application been convicted of or had a civil judgement rendered against them for commission of fraud or a criminal offense in connection with obtaining, attempting to obtain, or performing a public (Federal, State, or local) transaction or contract under a public transaction; violation of Federal or State antitrust statutes or commission of embezzlement, theft, forgery, bribery, falsification or destruction of records, making false statements, or receiving stolen property;

(c) Are not presently indicted for or otherwise criminally or civilly charged by a governmental entity (Federal, State, or local) with commission of any of the offenses enumerated in paragraph (2)(b) of this certification; and

(d) Have not within a three-year period preceding this application had one or more public transaction (Federal, State, or local) terminated for cause or default; and

B. Where the applicant is unable to certify to any of the statements in this certification, he or she shall attach an explanation to this application.

3. DRUG-FREE WORKPLACE (GRANTEES OTHER THAN INDIVIDUALS)

As required by the Drug-Free Workplace Act of 1988, and implemented at 34 CFR Part 85, Subpart F, for grantees, as defined at 34 CFR Part 85, Sections 85.605 and 85.610 -

A. The applicant certifies that it will or will continue to provide a drug-free workplace by:

(a) Publishing a statement notifying employees that the unlawful manufacture, distribution, dispensing, possession, or use of a controlled substance is prohibited in the grantee's workplace and specifying the actions that will be taken against employees for violation of such prohibition;

(b) Establishing an on-going drug-free awareness program to inform employees about:

(1) The dangers of drug abuse in the workplace;

(2) The grantee's policy of maintaining a drug-free workplace;

(3) Any available drug counseling, rehabilitation, and employee assistance programs; and

(4) The penalties that may be imposed upon employees for drug abuse violations occurring in the workplace;

(c) Making it a requirement that each employee to be engaged in the performance of the grant be given a copy of the statement required by paragraph (a);

(d) Notifying the employee in the statement required by paragraph (a) that, as a condition of employment under the grant, the employee will:

(1) Abide by the terms of the statement; and

(2) Notify the employer in writing of his or her conviction for a violation of a criminal drug statute occurring in the workplace no later than five calendar days after such conviction;

(e) Notifying the agency, in writing, within 10 calendar days after receiving notice under subparagraph (d)(2) from an employee or otherwise receiving actual notice of such conviction. Employers of convicted employees must provide notice, including position title, to: Director, Grants Policy and Oversight Staff, U.S. Department of Education, 400 Maryland Avenue, S.W. (Room 3652, GSA Regional Office Building No. 3), Washington, DC 20202-4248. Notice shall include the identification number(s) of each affected grant;

(f) Taking one of the following actions, within 30 calendar days of receiving notice under subparagraph (d)(2), with respect to any employee who is so convicted:

(1) Taking appropriate personnel action against such an employee, up to and including termination, consistent with the requirements of the Rehabilitation Act of 1973, as amended; or

(2) Requiring such employee to participate satisfactorily in a drug abuse assistance or rehabilitation program approved for such purposes by a Federal, State, or local health, law enforcement, or other appropriate agency;

(g) Making a good faith effort to continue to maintain a drug-free workplace through implementation of paragraphs (a), (b), (c), (d), (e), and (f).

B. The grantee may insert in the space provided below the site(s) for the performance of work done in connection with the specific grant:

Place of Performance (Street address. city, county, state, zip code)

_____

_____

_____

Check [ ] if there are workplaces on file that are not identified here.

DRUG-FREE WORKPLACE (GRANTEES WHO ARE INDIVIDUALS)

As required by the Drug-Free Workplace Act of 1988, and implemented at 34 CFR Part 85, Subpart F, for grantees, as defined at 34 CFR Part 85, Sections 85.605 and 85.610-

A. As a condition of the grant, I certify that I will not engage in the unlawful manufacture, distribution, dispensing, possession, or use of a controlled substance in conducting any activity with the grant; and

B. If convicted of a criminal drug offense resulting from a violation occurring during the conduct of any grant activity, I will report the conviction, in writing, within 10 calendar days of the conviction, to: Director, Grants Policy and Oversight Staff, Department of Education, 400 Maryland Avenue, S.W. (Room 3652, GSA Regional Office Building No. 3), Washington, DC 20202-4248. Notice shall include the identification number(s) of each affected grant.

As the duly authorized representative of the applicant, I hereby certify that the applicant will comply with the above certifications.

NAME OF APPLICANT	PR/AWARD NUMBER AND / OR PROJECT NAME
PRINTED NAME AND TITLE OF AUTHORIZED REPRESENTATIVE	
SIGNATURE	DATE

Certification Regarding Debarment, Suspension, Ineligibility and Voluntary Exclusion — Lower Tier Covered Transactions

This certification is required by the Department of Education regulations implementing Executive Order 12549, Debarment and Suspension, 34 CFR Part 85, for all lower tier transactions meeting the threshold and tier requirements stated at Section 85.110.

Instructions for Certification

1. By signing and submitting this proposal, the prospective lower tier participant is providing the certification set out below.

2. The certification in this clause is a material representation of fact upon which reliance was placed when this transaction was entered into. If it is later determined that the prospective lower tier participant knowingly rendered an erroneous certification, in addition to other remedies available to the Federal Government, the department or agency with which this transaction originated may pursue available remedies, including suspension and/or debarment.

3. The prospective lower tier participant shall provide immediate written notice to the person to which this proposal is submitted if at any time the prospective lower tier participant learns that its certification was erroneous when submitted or has become erroneous by reason of changed circumstances.

4. The terms "covered transaction," "debarred," "suspended," "ineligible," "lower tier covered transaction," "participant," " person," "primary covered transaction," " principal," "proposal," and "voluntarily excluded," as used in this clause, have the meanings set out in the Definitions and Coverage sections of rules implementing Executive Order 12549. You may contact the person to which this proposal is submitted for assistance in obtaining a copy of those regulations.

5. The prospective lower tier participant agrees by submitting this proposal that, should the proposed covered transaction be entered into, it shall not knowingly enter into any lower tier covered transaction with a person who is debarred, suspended, declared ineligible, or voluntarily excluded from participation in this covered transaction, unless authorized by the department or agency with which this transaction originated.

6. The prospective lower tier participant further agrees by submitting this proposal that it will include the clause titled "Certification Regarding Debarment, Suspension, Ineligibility, and Voluntary Exclusion-Lower Tier Covered Transactions," without modification, in all lower tier covered transactions and in all solicitations for lower tier covered transactions.

7. A participant in a covered transaction may rely upon a certification of a prospective participant in a lower tier covered transaction that it is not debarred, suspended, ineligible, or voluntarily excluded from the covered transaction, unless it knows that the certification is erroneous. A participant may decide the method and frequency by which it determines the eligibility of its principals. Each participant may but is not required to, check the Nonprocurement List.

8. Nothing contained in the foregoing shall be construed to require establishment of a system of records in order to render in good faith the certification required by this clause. The knowledge and information of a participant is not required to exceed that which is normally possessed by a prudent person in the ordinary course of business dealings.

9. Except for transactions authorized under paragraph 5 of these instructions, if a participant in a covered transaction knowingly enters into a lower tier covered transaction with a person who is suspended, debarred, ineligible, or voluntarily excluded from participation in this transaction, in addition to other remedies available to the Federal Government, the department or agency with which this transaction originated may pursue available remedies, including suspension and/or debarment.

Certification

(1) The prospective lower tier participant certifies, by submission of this proposal, that neither it nor its principals are presently debarred, suspended, proposed for debarment, declared ineligible, or voluntarily excluded from participation in this transaction by any Federal department or agency.

(2) Where the prospective lower tier participant is unable to certify to any of the statements in this certification, such prospective participant shall attach an explanation to this proposal.

NAME OF APPLICANT	PR/AWARD NUMBER AND/OR PROJECT NAME
PRINTED NAME AND TITLE OF AUTHORIZED REPRESENTATIVE	
SIGNATURE	DATE

ED 80-0014, 9/90 (Replaces GCS-009 (REV.12/88), which is obsolete)

DISCLOSURE OF LOBBYING ACTIVITIES

Approved by OMB 0348-0046

Complete this form to disclose lobbying activities pursuant to 31 U.S.C. 1352
(See reverse for public burden disclosure.)

1. Type of Federal Action:	2. Status of Federal Action:	3. Report Type:
☐ a. contract b. grant c. cooperative agreement d. loan e. loan guarantee f. loan insurance	☐ a. bid/offer/application b. initial award c. post-award	☐ a. initial filing b. material change **For Material Change Only:** year _____ quarter _____ date of last report _____

4. Name and Address of Reporting Entity:	5. If Reporting Entity in No. 4 is a Subawardee, Enter Name and Address of Prime:
☐ Prime ☐ Subawardee Tier _____, *if known*: **Congressional District**, *if known*:	 **Congressional District**, *if known*:
6. Federal Department/Agency:	**7. Federal Program Name/Description:** CFDA Number, *if applicable*: _____
8. Federal Action Number, *if known*:	**9. Award Amount**, *if known*: $
10. a. Name and Address of Lobbying Registrant (*if individual, last name, first name, MI*):	**b. Individuals Performing Services** (*including address if different from No. 10a*) (*last name, first name, MI*):
11. Information requested through this form is authorized by title 31 U.S.C. section 1352. This disclosure of lobbying activities is a material representation of fact upon which reliance was placed by the tier above when this transaction was made or entered into. This disclosure is required pursuant to 31 U.S.C. 1352. This information will be reported to the Congress semi-annually and will be available for public inspection. Any person who fails to file the required disclosure shall be subject to a civil penalty of not less that $10,000 and not more than $100,000 for each such failure.	Signature: _____ Print Name: _____ Title: _____ Telephone No.: _____ Date: _____
Federal Use Only:	Authorized for Local Reproduction Standard Form LLL (Rev. 7-97)

INSTRUCTIONS FOR COMPLETION OF SF-LLL, DISCLOSURE OF LOBBYING ACTIVITIES

This disclosure form shall be completed by the reporting entity, whether subawardee or prime Federal recipient, at the initiation or receipt of a covered Federal action, or a material change to a previous filing, pursuant to title 31 U.S.C. section 1352. The filing of a form is required for each payment or agreement to make payment to any lobbying entity for influencing or attempting to influence an officer or employee of any agency, a Member of Congress, an officer or employee of Congress, or an employee of a Member of Congress in connection with a covered Federal action. Complete all items that apply for both the initial filing and material change report. Refer to the implementing guidance published by the Office of Management and Budget for additional information.

1. Identify the type of covered Federal action for which lobbying activity is and/or has been secured to influence the outcome of a covered Federal action.

2. Identify the status of the covered Federal action.

3. Identify the appropriate classification of this report. If this is a followup report caused by a material change to the information previously reported, enter the year and quarter in which the change occurred. Enter the date of the last previously submitted report by this reporting entity for this covered Federal action.

4. Enter the full name, address, city, State and zip code of the reporting entity. Include Congressional District, if known. Check the appropriate classification of the reporting entity that designates if it is, or expects to be, a prime or subaward recipient. Identify the tier of the subawardee, e.g., the first subawardee of the prime is the 1st tier. Subawards include but are not limited to subcontracts, subgrants and contract awards under grants.

5. If the organization filing the report in item 4 checks "Subawardee," then enter the full name, address, city, State and zip code of the prime Federal recipient. Include Congressional District, if known.

6. Enter the name of the Federal agency making the award or loan commitment. Include at least one organizational level below agency name, if known. For example, Department of Transportation, United States Coast Guard.

7. Enter the Federal program name or description for the covered Federal action (item 1). If known, enter the full Catalog of Federal Domestic Assistance (CFDA) number for grants, cooperative agreements, loans, and loan commitments.

8. Enter the most appropriate Federal identifying number available for the Federal action identified in item 1 (e.g., Request for Proposal (RFP) number; Invitation for Bid (IFB) number; grant announcement number; the contract, grant, or loan award number; the application/proposal control number assigned by the Federal agency). Include prefixes, e.g., "RFP-DE-90-001."

9. For a covered Federal action where there has been an award or loan commitment by the Federal agency, enter the Federal amount of the award/loan commitment for the prime entity identified in item 4 or 5.

10. (a) Enter the full name, address, city, State and zip code of the lobbying registrant under the Lobbying Disclosure Act of 1995 engaged by the reporting entity identified in item 4 to influence the covered Federal action.

    (b) Enter the full names of the individual(s) performing services, and include full address if different from 10 (a). Enter Last Name, First Name, and Middle Initial (MI).

11. The certifying official shall sign and date the form, print his/her name, title, and telephone number.

According to the Paperwork Reduction Act, as amended, no persons are required to respond to a collection of information unless it displays a valid OMB Control Number. The valid OMB control number for this information collection is OMB No. 0348-0046. Public reporting burden for this collection of information is estimated to average 10 minutes per response, including time for reviewing instructions, searching existing data sources, gathering and maintaining the data needed, and completing and reviewing the collection of information. Send comments regarding the burden estimate or any other aspect of this collection of information, including suggestions for reducing this burden, to the Office of Management and Budget, Paperwork Reduction Project (0348-0046), Washington, DC 20503.

[FR Doc. 00–11992 Filed 5–11–00; 8:45 am]

BILLING CODE 4000–01–C

Federal Register

Friday,
May 12, 2000

Part V

Department of Housing and Urban Development

24 CFR Part 583

Supportive Housing Program—Increasing Operating Cost Percentage; Interim Rule

DEPARTMENT OF HOUSING AND URBAN DEVELOPMENT

24 CFR Part 583

[Docket No. FR–4576–I–01]

RIN 2506–AC05

Supportive Housing Program—Increasing Operating Cost Percentage

AGENCY: Office of the Assistant Secretary for Community Planning and Development, HUD.

ACTION: Interim rule.

SUMMARY: This document amends the Supportive Housing Program regulations by changing the number of years for which the grant can cover 75 percent of operating costs from the first two years to all years of the grant term. This amendment will provide the full statutory flexibility allowed for this activity. Providing greater assurance of a funding source for operating housing under the program will promote more use of the program for housing.

DATES: *Effective date:* June 12, 2000.

Comments Due Date: July 11, 2000.

ADDRESSES: Submit written comments regarding this interim rule to the Regulations Division, Office of General Counsel, Room 10276, Department of Housing and Urban Development, 451 7th Street, SW, Washington, DC 20410–0500. Comments should refer to the interim rule by title and docket number, as shown above. Facsimile (FAX) comments will not be accepted.

FOR FURTHER INFORMATION CONTACT: John Garrity, Office of Special Needs Assistance Programs, Room 7262, Department of Housing and Urban Development, 451 7th Street, SW, Washington, DC 20410; telephone (202) 708–4300 (this is not a toll-free number). Persons with hearing or speech impairments may access the above telephone number via TTY by calling the Federal Information Relay Service at 1–800–877–8339.

SUPPLEMENTARY INFORMATION:

Background

The Department's Supportive Housing Program provides assistance for housing and supportive services for homeless persons, as authorized by Title IV, subtitle C of the Stewart B. McKinney Homeless Assistance Act of 1987, as amended (the McKinney Act) (42 U.S.C. 11381–11389). Grants are available for acquisition, rehabilitation, new construction, and leasing of supportive housing, operating costs in connection with supportive housing, and supportive services provided to homeless persons. The regulations that implement the program are found at 24 CFR part 583.

Among the types of housing funded under the Supportive Housing Program (SHP) are transitional housing, permanent housing for homeless persons with disabilities, innovative housing projects (or part of project) for, or alternative methods of, meeting the immediate and long-term needs of homeless individuals and families in the transition to permanent housing. Also funded under the program are supportive services.

The authorizing statute permits the grant recipient's match for operating costs for housing to be no more than 25 percent in any year. However, when the program was developed, the rule (§ 583.125(c)) required a 25 percent match of HUD funds with local funds for the first two years, and a 50 percent match thereafter. The authorizing statute contains no comparable match requirement for use of the program to provide services. As a result, the program has favored the use of services, to a large degree.

The HUD Appropriations Acts for Fiscal Years 1999 (112 Stat. 2479) and 2000 (113 Stat. 1063) included two provisions to encourage the use of homeless assistance program funds for supportive housing as opposed to services for homeless persons. These provisions were the requirements that at least 30 percent of the funds be used for permanent housing and that funding for services be required to have at least a 25 percent match.

This Rule

To encourage production of housing with SHP funds, in accordance with the Congressional intent expressed in the Appropriations Acts, this amendment is being made to give applicants the full McKinney Act flexibility allowed for this activity. This interim rule revises § 583.125 so that SHP funds may be used to pay for up to 75 percent of the operating costs in all years of the grant term, making the recipient provide 25 percent of the operating costs of supportive housing for homeless persons for each year of the grant term. Operating costs include actual expenses for supportive housing, such as maintenance, repair, security, utilities, furnishings, and equipment.

Findings and Certifications

Justification for Interim Rule

HUD generally publishes a rule for public comment before issuing a rule for effect, in accordance with its own regulations on rulemaking in 24 CFR part 10. Part 10, however, provides that prior notice and public comment may be omitted ''if the Department determines in a particular case . . . that notice and public procedure are impracticable, unnecessary or contrary to the public interest.'' (24 CFR 10.1). This interim rule implements a change in the provisions for a match by the grantee, consistent with the statute and Congressional intent, that will have an impact on the applications for the next round of funding under the Supportive Housing Program. That round of funding will take place shortly, in accordance with the Notice of Funding Availability for Fiscal Year 2000 funds. As a result, to make this change in policy effective for Fiscal Year 2000 funding applications, it is necessary to make the change quickly. There is not time to solicit public comments on the change before making it effective if it is to affect this fiscal year. Accordingly, HUD determines that it is unnecessary to solicit public comments before making the policy effective, and it is issuing this interim rule for effect without prior notice and comment. Nevertheless, the Department solicits comments from the public on the rule and will consider comments received before issuing a final rule.

Impact on Small Entities

The Secretary, in accordance with the Regulatory Flexibility Act (5 U.S.C. 605(b)), has reviewed and approved this rule, and in so doing certifies that this rule will not have a significant economic impact on a substantial number of small entities. This rule will provide greater flexibility to local governments in the way they administer their Supportive Housing Programs. It will have no measurable economic impact on small businesses.

Environmental Impact

A Finding of No Significant Impact with respect to the environment has been made in accordance with HUD regulations at 24 CFR part 50, which implement section 102(2)(C) of the National Environmental Policy Act of 1969 (42 U.S.C. 4223). That Finding is available for public inspection between the hours of 7:30 a.m. and 5:30 p.m. weekdays in the Regulations Division, Office of General Counsel, Room 10276, U.S. Department of Housing and Urban Development, 451 Seventh Street, SW, Washington, DC 20410.

Executive Order 13132, Federalism

This interim rule does not have federalism implications. It does not impose substantial direct costs on States and local governments or preempt State

law within the meaning of Executive Order 13132.

Catalog of Federal Domestic Assistance

The Catalog of Federal Domestic Assistance number for the program affected by this interim rule is 14.235.

List of Subjects in 24 CFR Part 583

Homeless, Rent subsidies, Reporting and recordkeeping requirements, Supportive housing programs—housing and community development, Supportive services.

Accordingly, for reasons stated in the preamble, HUD amends part 583 of title 24 of the Code of Federal Regulations as follows:

PART 583—SUPPORTIVE HOUSING PROGRAM

1. The authority citation for part 583 continues to read as follows:

Authority: 42 U.S.C. 3535(d) and 11389.

2. Revise paragraph (c) of § 583.125 to read as follows:

§ 583.125 Grants for operating costs.

* * * * *

(c) *Recipient match requirement for operating costs.* Assistance for operating costs will be available for up to 75 percent of the total cost in each year of the grant term. The recipient must pay the percentage of the actual operating costs not funded by HUD. At the end of each operating year, the recipient must demonstrate that it has met its match requirement of the costs for that year.

Dated: April 21, 2000.

Cardell Cooper,

Assistant Secretary for Community Planning and Development.

[FR Doc. 00–11894 Filed 5–11–00; 8:45 am]

BILLING CODE 4210–29–P

Federal Register

Friday,
May 12, 2000

Part VI

The President

Proclamation 7305—Mother's Day, 2000

Federal Register
Vol. 65, No. 93
Friday, May 12, 2000

Presidential Documents

Title 3—

The President

Proclamation 7305 of May 10, 2000

Mother's Day, 2000

By the President of the United States of America

A Proclamation

We are living in a new century and a new age, where the revolution in communications technology is changing almost every aspect of human experience. But even in this new era of global connections, there is perhaps no more powerful link than the love between mother and child.

That bond is a child's first experience of the world, and that love is often the deepest source of the self-esteem, courage, and character that children need to thrive. Mothers are their children's first teachers; they are their inspiring role models whose generosity, compassion, and unconditional acceptance give children the strength and encouragement to reach their fullest potential and to make their own contributions to their families, communities, and country.

Even in this age of spectacular technological advances, mothers still face the daunting challenges of balancing the responsibilities of home and work and meeting the changing emotional, educational, and physical needs of their children. Mothers strive to provide a safe and nurturing environment. They help their children navigate the often stormy waters of an increasingly complicated world. They teach their children to approach conflict with words, not violence; to cherish the richness of our diversity and reject prejudice in any form; and to believe in themselves.

Each year we set aside this special day to acknowledge all that our mothers—whether biological or foster, adoptive or stepmothers—have given us. It is a time to reflect on all we have gained from their unwavering care, guidance, and sacrifice, and a time to express openly our deep gratitude and abiding love. The Congress, by a joint resolution approved May 8, 1914 (38 Stat. 770), has designated the second Sunday in May of each year as ''Mother's Day'' and requested the President to call for its appropriate observance.

NOW, THEREFORE, I, WILLIAM J. CLINTON, President of the United States of America, do hereby proclaim May 14, 2000, as Mother's Day. Whether we are able to share this special day with our mothers in person or are blessed only with our memories of their love, in our hearts they remain with us always. I urge all Americans to express their love and respect for their mothers on this day, to speak the words of appreciation we too often neglect to say, and to observe this day with appropriate ceremonies, activities, and programs.

IN WITNESS WHEREOF, I have hereunto set my hand this tenth day of May, in the year of our Lord two thousand, and of the Independence of the United States of America the two hundred and twenty-fourth.

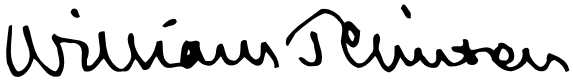

[FR Doc. 00–12259
Filed 5–11–00; 11:29 am]
Billing code 3195–01–P

Reader Aids

Federal Register

Vol. 65, No. 93

Friday, May 12, 2000

CUSTOMER SERVICE AND INFORMATION

Federal Register/Code of Federal Regulations

General Information, indexes and other finding aids	**202–523–5227**
Laws	**523–5227**
Presidential Documents	
Executive orders and proclamations	**523–5227**
The United States Government Manual	**523–5227**
Other Services	
Electronic and on-line services (voice)	**523–4534**
Privacy Act Compilation	**523–3187**
Public Laws Update Service (numbers, dates, etc.)	**523–6641**
TTY for the deaf-and-hard-of-hearing	**523–5229**

ELECTRONIC RESEARCH

World Wide Web

Full text of the daily Federal Register, CFR and other publications:

http://www.access.gpo.gov/nara

Federal Register information and research tools, including Public Inspection List, indexes, and links to GPO Access:

http://www.nara.gov/fedreg

E-mail

PENS (Public Law Electronic Notification Service) is an E-mail service for notification of recently enacted Public Laws. To subscribe, send E-mail to

listserv@www.gsa.gov

with the text message:

subscribe PUBLAWS-L your name

Use listserv@www.gsa.gov only to subscribe or unsubscribe to PENS. We cannot respond to specific inquiries.

Reference questions. Send questions and comments about the Federal Register system to:

info@fedreg.nara.gov

The Federal Register staff cannot interpret specific documents or regulations.

FEDERAL REGISTER PAGES AND DATE, MAY

25233–25434 1
25435–25622 2
25623–25828 3
25829–26116 4
26117–26480 5
26481–26730 8
26731–26940 9
29941–30334 10
30335–30520 11
30521–30828 12

CFR PARTS AFFECTED DURING MAY

At the end of each month, the Office of the Federal Register publishes separately a List of CFR Sections Affected (LSA), which lists parts and sections affected by documents published since the revision date of each title.

3 CFR

Proclamations:
7297 25821
7298 25823
7299 25825
7300 25827
7301 26113
7302 26117
7303 26481
7304 30335
7305 30827

Executive Orders:
10977 (See EO 13154) 26479
11478 (Amended by EO 13152).....26115
12985 (See EO 13154) 26479
13151 25619
13152 26115
13153 26475
13154 26479
13155 30521

5 CFR

351 25623
532 .....26119, 26120
630 26483
1201 25623

7 CFR

47 29941
210 26904
220 26904
301 .....26487, 30337
400 29941
945 25625
959 29942
993 29945
981 25233
985 30341
989 30525
1205 25236
1436 30345

Proposed Rules:
319 30365

9 CFR

Proposed Rules:
77 25292
590 26148

10 CFR

72 25241
420 25265
810 26278

Proposed Rules:
32 26148
50 30550
76 30018
Ch. 1 26772

11 CFR

Proposed Rules:
104 25672

12 CFR

563 30527
563c 30527
563g 30527
614 26278
790 25266
900 25267
917 25267
940 25267
1735 26731

Proposed Rules:
611 26776
900 .....25676, 26518
917 26518
926 26518
940 25676
944 26518
950 .....25676, 26518
952 26518
955 25676
956 25676
961 26518
980 26518

14 CFR

25 25435
39 .....25278, 25280, 25281, 25437, 25627, 25829, 25833, 26121, 26122, 26124, 26735, 26738, 30527, 30529, 30532, 30534, 30536, 30538, 30539
71 .....25439, 25440, 26126, 26128, 30541
95 26740
97 .....25838, 25842
121 26128

Proposed Rules:
39 .....25694, 25696, 25892, 26149, 26152, 26781, 26783, 30019, 30021, 30023, 30025, 30028, 30031, 30033, 30553
71 .....25455, 25456, 25457, 26154, 26155, 26156, 26157, 26158, 26160, 26785, 26786, 26787, 26788, 30036, 30678

15 CFR

Proposed Rules:
301 30555

16 CFR

305 30351

Proposed Rules:
307 26534
310 26161

17 CFR

4 25980
231 25843

241 25843
270 25630
271 25843
Proposed Rules:
240 26534

20 CFR

Proposed Rules:
217 30366
335 26161
403 30037

21 CFR

10 25440
13 25440
14 25440
15 25440
25 30352
177 26744
178 ....26129, 26746
203 25639
205 25639
510 25641
522 26747
1301 30541
Proposed Rules:
2 26789
16 26162
25 30366
900 26162

22 CFR

Proposed Rules:
706 30369

23 CFR

668 25441

24 CFR

84 30498
583 30822
905 25445

25 CFR

Proposed Rules:
38 26728

26 CFR

48 26488
Proposed Rules:
1 26542

30 CFR

250 25284
917 29949
948 26130

31 CFR

560 25642
Proposed Rules:
10 30375

32 CFR

Ch. XXIX 30542
727 26748

33 CFR

100 ....25446, 25644
117 ....25446, 25645, 25646, 29954
165 ....26489, 26750, 29954
Proposed Rules:
117 30043
165 ....25458, 25980, 30376

34 CFR

674 26136
Proposed Rules:
100 26464
104 26464
106 26464
110 26464
300 30314

36 CFR

327 26136
Proposed Rules:
1253 26542
294 ....30276, 30288

37 CFR

Proposed Rules:
201 25894
202 26162

39 CFR

20 29955
111 26750
Proposed Rules:
111 26792

40 CFR

9 ....25982, 26491
52 ....29956, 29959, 30355, 30358
62 25447
63 26491
81 29959
141 25982
142 25982
143 25982
180 ....25647, 25652, 25655, 25660, 25857, 15860, 29963, 30543
228 30545
271 ....26750, 26755, 29973, 29981
300 30482
Proposed Rules:
52 ....26792, 30045, 30387
61 26932
62 25460
63 26544
81 30045
141 ....25894, 30194
142 ....25894, 30194
239 26544
271 ....26802, 30046
300 ....25292, 26803, 30489
403 26550

41 CFR

Proposed Rules:
60–1 26088
60–2 26088

42 CFR

414 25664
Proposed Rules:
9 25894
412 26282
413 26282
485 26282
1003 25460

43 CFR

4 25449

44 CFR

64 30545

46 CFR

515 26506
520 26506
530 26506
535 26506

47 CFR

1 29985
11 29985
22 25451
24 25452
54 ....25864, 26513
73 ....25450, 25453, 25669, 25865, 29985, 30547
74 29985
79 26757
Proposed Rules:
73 ....25463, 25697, 25865, 30046, 30047, 30558

48 CFR

219 30191
1815 30012
1819 30012
1852 30012
Proposed Rules:
2 30311
11 30311
15 30311
23 30311
32 25614
42 30311
52 25614
1503 25899
1552 25899

49 CFR

391 25285
552 30680
571 30680
585 30680
595 30680
Proposed Rules:
350 26166
359 25540
390 ....25540, 26166
394 ....25540, 26166
395 ....25540, 26166
398 ....25540, 26166
538 26805

50 CFR

17 ....25867, 26438, 26762
32 30772
222 25670
223 25670
300 30014
600 25881
622 ....30362, 30547
648 ....25887, 30548
660 ....25881, 26138
679 ....25290, 25671, 30549
Proposed Rules:
10 26664
13 26664
17 ....26664, 30048
23 26664
224 26167
635 26876
679 30559
697 25698

REMINDERS

The items in this list were editorially compiled as an aid to Federal Register users. Inclusion or exclusion from this list has no legal significance.

RULES GOING INTO EFFECT MAY 12, 2000

AGRICULTURE DEPARTMENT
Agricultural Marketing Service
Olives grown in—
California; published 4-12-00
Spearmint oil produced in Far West; published 5-11-00

ENVIRONMENTAL PROTECTION AGENCY
Air quality implementation plans; approval and promulgation; various States:
Georgia; published 3-13-00
Pesticides; tolerances in food, animal feeds, and raw agricultural commodities:
Dicamba; published 5-12-00

FEDERAL COMMUNICATIONS COMMISSION
Common carrier services:
Local competition and broadband reporting program; published 4-12-00

INTERIOR DEPARTMENT
Fish and Wildlife Service
Endangered and threatened species:
Santa Ana sucker; published 4-12-00
National Wildlife Refuge System:
Hunting and fishing—
Refuge-specific regulations; published 5-12-00

RAILROAD RETIREMENT BOARD
Railroad Unemployment Insurance Act:
Sickness and unemployment benefits; waiting period shortened, etc.; published 4-12-00

TRANSPORTATION DEPARTMENT
Coast Guard
Uninspected vessels:
Passenger vessel safety; published 4-28-00

COMMENTS DUE NEXT WEEK

AGENCY FOR INTERNATIONAL DEVELOPMENT
Uniform administrative requirements for grants and agreements with institutions of higher education, hospitals, and other non-profit organizations; comments due by 5-15-00; published 3-16-00

AGRICULTURE DEPARTMENT
Agricultural Marketing Service
Almonds grown in—
California; comments due by 5-16-00; published 5-1-00
Avocados grown in—
Florida; comments due by 5-17-00; published 4-17-00
National Organic Program:
Organic production and handling of aquatic animals to be labeled as organic; comments due by 5-17-00; published 3-23-00
Pork promotion; research and consumer information order; comments due by 5-18-00; published 4-18-00
Tobacco inspection:
Flue-cured tobacco; comments due by 5-15-00; published 3-15-00
Watermelon research and promotion plan; comments due by 5-16-00; published 3-17-00

AGRICULTURE DEPARTMENT
Animal and Plant Health Inspection Service
Interstate transportation of animals and animal products (quarantine):
Livestock identification; American Identification Number System recognition; comments due by 5-16-00; published 4-26-00
Noxious weed regulations:
Update; comments due by 5-19-00; published 3-20-00

AGRICULTURE DEPARTMENT
Foreign Agricultural Service
Import quotas and fees:
Sugar-containing products tariff-rate quota licensing; comments due by 5-17-00; published 4-18-00

AGRICULTURE DEPARTMENT
Food and Nutrition Service
Child nutrition programs:
National school lunch, school breakfast, and child and adult care food programs—
Infant meal program; whole cow's milk eliminated as option in reimbursable meals for infants under one year of age; comments due by 5-15-00; published 11-15-99

AGRICULTURE DEPARTMENT
Forest Service
Forest transportation system administration; comments due by 5-17-00; published 4-28-00

AGRICULTURE DEPARTMENT
Food Safety and Inspection Service
Meat and poultry inspection:
Cured pork products compliance monitoring system; requirements elimination; comments due by 5-16-00; published 3-17-00

AGRICULTURE DEPARTMENT
Uniform administrative requirements for grants and agreements with institutions of higher education, hospitals, and other non-profit organizations; comments due by 5-15-00; published 3-16-00

ARCHITECTURAL AND TRANSPORTATION BARRIERS COMPLIANCE BOARD
Americans with Disabilities Act and Architectural Barriers Act; implementation:
Accessibility guidelines—
Buildings and facilities; construction and alterations; comments due by 5-15-00; published 3-9-00

COMMERCE DEPARTMENT
Uniform administrative requirements for grants and agreements with institutions of higher education, hospitals, and other non-profit organizations; comments due by 5-15-00; published 3-16-00

COMMERCE DEPARTMENT
Export Administration Bureau
Export administration regulations:
Encryption commodities or software; export and reexport to individuals, commercial firms, and other non-government end-users in all destinations; comments due by 5-15-00; published 1-14-00

COMMERCE DEPARTMENT
National Oceanic and Atmospheric Administration
Fishery conservation and management:
West Coast States and WEstern Pacific fisheries—
Groundfish; comments due by 5-19-00; published 5-4-00
West Coast States and Western Pacific fisheries—
Western Pacific crustacean and Northwestern Hawaiian Islands lobster; comments due by 5-15-00; published 4-28-00

COMMERCE DEPARTMENT
Patent and Trademark Office
Patent cases:
Application examiniation and provisional application practice; changes; comments due by 5-19-00; published 3-20-00

DEFENSE DEPARTMENT
Army Department
Army contracting:
Contractor manhour reporting requirement; comments due by 5-15-00; published 3-15-00

DEFENSE DEPARTMENT
Acquisition regulations:
Construction and service contracts in noncontiguous States; comments due by 5-15-00; published 3-16-00
Grant and agreement regulations:
Uniform administrative requirements for grants and agreements with institutions of higher education, hospitals, and other non-profit organizations; comments due by 5-15-00; published 3-16-00

EDUCATION DEPARTMENT
Uniform administrative requirements for grants and agreements with institutions of higher education, hospitals, and other non-profit organizations; comments due by 5-15-00; published 3-16-00

ENERGY DEPARTMENT
Assistance regulations:
Uniform administrative requirements for grants and agreements with institutions of higher education, hospitals, and other non-profit organizations; comments due by 5-15-00; published 3-16-00

ENVIRONMENTAL PROTECTION AGENCY
Air programs; approval and promulgation; State plans

for designated facilities and pollutants:
Delaware; comments due by 5-15-00; published 4-14-00
Air quality implementation plans; approval and promulgation; various States:
California; comments due by 5-17-00; published 4-17-00
Florida; comments due by 5-17-00; published 4-13-00
Illinois; comments due by 5-15-00; published 4-13-00
Maine; comments due by 5-18-00; published 4-18-00
Pennsylvania; comments due by 5-18-00; published 4-18-00
Grants and other Federal assistance:
Uniform administrative requirements for grants and agreements with institutions of higher education, hospitals, and other non-profit organizations; comments due by 5-15-00; published 3-16-00
Radiation protection programs:
Idaho National Engineering and Environmental Laboratory—
Transuranic radioactive waste proposed for disposal at Waste Isolation Pilot Plant; waste characterization program documents availability; comments due by 5-15-00; published 4-14-00
Water pollution control:
Ocean dumping; site designations—
Coos Bay, OR; comments due by 5-15-00; published 3-31-00
Water supply:
National primary drinking water regulations—
Interim enhanced surface water treatment rule, Stage 1 disinfectants and disinfection byproducts rule, and State primacy requirements; revisions; comments due by 5-15-00; published 4-14-00
Interim enhanced surface water treatment rule, Stage 1 disinfectants and disinfection byproducts rule, and State primacy requirements; revisions; comments due by 5-15-00; published 4-14-00

FEDERAL COMMUNICATIONS COMMISSION
Common carrier services:
Wireless telecommunications services—
Gulf of Mexico Service Area; cellular service and other commercial mobile radio services; comments due by 5-15-00; published 4-25-00
Radio stations; table of assignments:
Georgia; comments due by 5-15-00; published 4-4-00
Minnesota; comments due by 5-15-00; published 4-4-00
New York; comments due by 5-15-00; published 4-4-00
Texas; comments due by 5-15-00; published 4-4-00
Television broadcasting:
Digital television conversion; rules and policies; comments due by 5-17-00; published 3-23-00

FEDERAL RESERVE SYSTEM
Membership of State banking institutions (Regulation H):
Financial subsidiaries; comments due by 5-15-00; published 3-20-00

FEDERAL RETIREMENT THRIFT INVESTMENT BOARD
Thrift Savings Plan:
Administrative errors correction; comments due by 5-15-00; published 4-13-00

FEDERAL TRADE COMMISSION
Trade regulation rules:
Textile wearing apparel and certain piece goods; care labeling; comments due by 5-15-00; published 4-14-00

GOVERNMENT ETHICS OFFICE
Executive agency ethics training programs; amendments; comments due by 5-15-00; published 2-14-00
Correction; comments due by 5-15-00; published 2-28-00

HEALTH AND HUMAN SERVICES DEPARTMENT
Food and Drug Administration
Electronic records and electronic signatures:
Technical implementation; meeting and request for presentation abstracts; comments due by 5-19-00; published 2-22-00
Food additives:
Adhesive coatings and components, and paper and paperboard components—
2,2-dibromo-3-nitrilopropionamide; comments due by 5-18-00; published 4-18-00

HEALTH AND HUMAN SERVICES DEPARTMENT
Uniform administrative requirements for grants and agreements with institutions of higher education, hospitals, and other non-profit organizations; comments due by 5-15-00; published 3-16-00

INTERIOR DEPARTMENT
Fish and Wildlife Service
Endangered and threatened species:
Coastal cutthroat trout in Washington and Oregon; comments due by 5-15-00; published 4-14-00
Migratory bird permits:
Falconry standards—
Delaware; comments due by 5-15-00; published 4-14-00

INTERIOR DEPARTMENT
Assistance program; administrative and audit requirements and cost principles:
Uniform administrative requirements for grants and agreements with institutions of higher education, hospitals, and other non-profit organizations; comments due by 5-15-00; published 3-16-00

JUSTICE DEPARTMENT
Immigration and Naturalization Service
Irish Peace Process Cultural and Training Program; establishment; comments due by 5-16-00; published 3-17-00
Correction; comments due by 5-16-00; published 4-7-00

JUSTICE DEPARTMENT
Uniform administrative requirements for grants and agreements with institutions of higher education, hospitals, and other non-profit organizations; comments due by 5-15-00; published 3-16-00

LABOR DEPARTMENT
Uniform administrative requirements for grants and agreements with institutions of higher education, hospitals, and other non-profit organizations; comments due by 5-15-00; published 3-16-00

NATIONAL AERONAUTICS AND SPACE ADMINISTRATION
Grants and cooperative agreements:
Uniform administrative requirements for grants and agreements with institutions of higher education, hospitals, and other non-profit organizations; comments due by 5-15-00; published 3-16-00

NATIONAL ARCHIVES AND RECORDS ADMINISTRATION
Uniform administrative requirements for grants and agreements with institutions of higher education, hospitals, and other non-profit organizations; comments due by 5-15-00; published 3-16-00

NUCLEAR REGULATORY COMMISSION
Production and utilization facilities; domestic licensing:
Risk-informed revisions; special treatment requirements; comments due by 5-17-00; published 3-3-00

PERSONNEL MANAGEMENT OFFICE
Excepted service:
Persons with psychiatric disabilities; appointments; comments due by 5-16-00; published 3-17-00

STATE DEPARTMENT
Civil rights:
Uniform administrative requirements for grants and agreements with institutions of higher education, hospitals, and other non-profit organizations; comments due by 5-15-00; published 3-16-00
Irish Peace Process Cultural and Training Program; establishment; comments due by 5-16-00; published 3-17-00
Visas; nonimmigrant documentation:
Irish Peace Process Cultural and Training Program; comments due by 5-16-00; published 3-17-00

TRANSPORTATION DEPARTMENT
Coast Guard
Boating safety:

Vessel identification system—
State participation requirements; comments due by 5-16-00; published 2-16-00
Great Lakes pilotage regulations:
Rates update; comments due by 5-15-00; published 4-14-00
Ports and waterways safety:
Chesapeake Bay, MD; safety zone; comments due by 5-16-00; published 4-26-00
Skull Creek, Hilton Head, SC; safety zone; comments due by 5-16-00; published 3-17-00
Regattas and marine parades, anchorage regulations, and ports and waterways safety:
OPSAIL MAINE 2000, Portland, ME; regulated areas; comments due by 5-16-00; published 3-17-00

TRANSPORTATION DEPARTMENT
Uniform administrative requirements for grants and agreements with institutions of higher education, hospitals, and other non-profit organizations; comments due by 5-15-00; published 3-16-00

TRANSPORTATION DEPARTMENT
Federal Aviation Administration
Airworthiness directives:
Airbus; comments due by 5-15-00; published 4-14-00
Boeing; comments due by 5-16-00; published 4-11-00
Empresa Brasileira de Aeronautica S.A.; comments due by 5-17-00; published 4-17-00
Eurocopter France; comments due by 5-15-00; published 3-16-00
Fokker; comments due by 5-18-00; published 4-18-00
Raytheon; comments due by 5-19-00; published 3-22-00
Rolls-Royce plc; comments due by 5-15-00; published 3-16-00
Sikorsky; comments due by 5-15-00; published 3-15-00
Airworthiness standards:
Special conditions—
Hamilton Sunderstrand model np2000 propeller; comments due by 5-15-00; published 3-29-00
Class D and Class E airspace; comments due by 5-16-00; published 3-17-00
Class D and E airspace; comments due by 5-19-00; published 4-19-00

TRANSPORTATION DEPARTMENT
National Highway Traffic Safety Administration
Anthropomorphic test devices:
Occupant crash protection—
12-month-old infant crash test dummy; comments due by 5-15-00; published 3-31-00

TRANSPORTATION DEPARTMENT
Surface Transportation Board
Practice and procedure:
Combinations and ownership—
Major rail consolidation procedures; comments due by 5-16-00; published 4-6-00

TREASURY DEPARTMENT
Internal Revenue Service
Income taxes:
Foreign corportations, gross income; exclusions; comments due by 5-19-00; published 3-29-00

TREASURY DEPARTMENT
Financial subsidiaries:
Comparable ratings requirement for national banks among second 50 largest insured banks; comments due by 5-15-00; published 3-20-00
Financial activities; determination procedures; comments due by 5-15-00; published 3-20-00

LIST OF PUBLIC LAWS

This is a continuing list of public bills from the current session of Congress which have become Federal laws. It may be used in conjunction with ''P L U S'' (Public Laws Update Service) on 202–523–6641. This list is also available online at http://www.nara.gov/fedreg.

The text of laws is not published in the **Federal Register** but may be ordered in ''slip law'' (individual pamphlet) form from the Superintendent of Documents, U.S. Government Printing Office, Washington, DC 20402 (phone, 202–512–1808). The text will also be made available on the Internet from GPO Access at http://www.access.gpo.gov/nara/index.html. Some laws may not yet be available.

S.J. Res. 40/P.L. 106–198

Providing for the appointment of Alan G. Spoon as a citizen regent of the Board of Regents of the Smithsonian Institution. (May 5, 2000; 114 Stat. 249)

S.J. Res. 42/P.L. 106–199

Providing for the reappointment of Manuel L. Ibanez as a citizen regent of the Board of Regents of the Smithsonian Institution. (May 5, 2000; 114 Stat. 250)

Last List May 5, 2000

Public Laws Electronic Notification Service (PENS)

PENS is a free electronic mail notification service of newly enacted public laws. To subscribe, go to www.gsa.gov/archives/publaws-l.html or send E-mail to **listserv@www.gsa.gov** with the following text message:

SUBSCRIBE PUBLAWS-L Your Name.

Note: This service is strictly for E-mail notification of new laws. The text of laws is not available through this service. **PENS** cannot respond to specific inquiries sent to this address.