AUTHENTICATED
U.S. GOVERNMENT
INFORMATION
GPO

Federal Register

5–22–00 Monday
Vol. 65 No. 99 May 22, 2000
Pages 32007–32046

The **FEDERAL REGISTER** is published daily, Monday through Friday, except official holidays, by the Office of the Federal Register, National Archives and Records Administration, Washington, DC 20408, under the Federal Register Act (44 U.S.C. Ch. 15) and the regulations of the Administrative Committee of the Federal Register (1 CFR Ch. I). The Superintendent of Documents, U.S. Government Printing Office, Washington, DC 20402 is the exclusive distributor of the official edition.

The **Federal Register** provides a uniform system for making available to the public regulations and legal notices issued by Federal agencies. These include Presidential proclamations and Executive Orders, Federal agency documents having general applicability and legal effect, documents required to be published by act of Congress, and other Federal agency documents of public interest.

Documents are on file for public inspection in the Office of the Federal Register the day before they are published, unless the issuing agency requests earlier filing. For a list of documents currently on file for public inspection, see http://www.nara.gov/fedreg.

The seal of the National Archives and Records Administration authenticates the Federal Register as the official serial publication established under the Federal Register Act. Under 44 U.S.C. 1507, the contents of the **Federal Register** shall be judicially noticed.

The **Federal Register** is published in paper and on 24x microfiche. It is also available online at no charge as one of the databases on GPO Access, a service of the U.S. Government Printing Office.

The online edition of the **Federal Register** is issued under the authority of the Administrative Committee of the Federal Register as the official legal equivalent of the paper and microfiche editions (44 U.S.C. 4101 and 1 CFR 5.10). It is updated by 6 a.m. each day the **Federal Register** is published and it includes both text and graphics from Volume 59, Number 1 (January 2, 1994) forward.

GPO Access users can choose to retrieve online **Federal Register** documents as TEXT (ASCII text, graphics omitted), PDF (Adobe Portable Document Format, including full text and all graphics), or SUMMARY (abbreviated text) files. Users should carefully check retrieved material to ensure that documents were properly downloaded.

On the World Wide Web, connect to the **Federal Register** at http://www.access.gpo.gov/nara. Those without World Wide Web access can also connect with a local WAIS client, by Telnet to swais.access.gpo.gov, or by dialing (202) 512-1661 with a computer and modem. When using Telnet or modem, type swais, then log in as guest with no password.

For more information about GPO Access, contact the GPO Access User Support Team by E-mail at gpoaccess@gpo.gov; by fax at (202) 512–1262; or call (202) 512–1530 or 1–888–293–6498 (toll free) between 7 a.m. and 5 p.m. Eastern time, Monday–Friday, except Federal holidays.

The annual subscription price for the **Federal Register** paper edition is $638, or $697 for a combined **Federal Register,** Federal Register Index and List of CFR Sections Affected (LSA) subscription; the microfiche edition of the **Federal Register** including the Federal Register Index and LSA is $253. Six month subscriptions are available for one-half the annual rate. The charge for individual copies in paper form is $9.00 for each issue, or $9.00 for each group of pages as actually bound; or $2.00 for each issue in microfiche form. All prices include regular domestic postage and handling. International customers please add 25% for foreign handling. Remit check or money order, made payable to the Superintendent of Documents, or charge to your GPO Deposit Account, VISA, MasterCard or Discover. Mail to: New Orders, Superintendent of Documents, P.O. Box 371954, Pittsburgh, PA 15250–7954.

There are no restrictions on the republication of material appearing in the **Federal Register.**

How To Cite This Publication: Use the volume number and the page number. Example: 65 FR 12345.

SUBSCRIPTIONS AND COPIES

PUBLIC	
Subscriptions:	
Paper or fiche	**202–512–1800**
Assistance with public subscriptions	**512–1806**
General online information	**202–512–1530; 1–888–293–6498**
Single copies/back copies:	
Paper or fiche	**512–1800**
Assistance with public single copies	**512–1803**
FEDERAL AGENCIES	
Subscriptions:	
Paper or fiche	**523–5243**
Assistance with Federal agency subscriptions	**523–5243**

FEDERAL REGISTER WORKSHOP

THE FEDERAL REGISTER: WHAT IT IS AND HOW TO USE IT

FOR: Any person who uses the Federal Register and Code of Federal Regulations.

WHO: Sponsored by the Office of the Federal Register.

WHAT: Free public briefings (approximately 3 hours) to present:

1. The regulatory process, with a focus on the Federal Register system and the public's role in the development regulations.
2. The relationship between the Federal Register and Code of Federal Regulations.
3. The important elements of typical Federal Register documents.
4. An introduction to the finding aids of the FR/CFR system.

WHY: To provide the public with access to information necessary to research Federal agency regulations which directly affect them. There will be no discussion of specific agency regulations.

WASHINGTON, DC

WHEN: May 23, 2000 at 9:00 am.

WHERE: Office of the Federal Register
Conference Room, Suite 700
800 North Capitol Street, NW.
Washington, DC
(3 blocks north of Union Station Metro)

RESERVATIONS: 202–523–4538

Printed on recycled paper.

Contents

Federal Register

Vol. 65, No. 99

Monday, May 22, 2000

Agricultural Marketing Service
RULES
Milk marketing orders:
New England et al.; correction, 32010
Spearmint oil produced in Far West, 32007–32010
PROPOSED RULES
Cherries (tart) grown in—
Michigan et al., 32044–32046
NOTICES
Agency information collection activities:
Proposed collection; comment request, 32072–32074

Agriculture Department
See Agricultural Marketing Service
See Forest Service
See Natural Resources Conservation Service
NOTICES
Committees; establishment, renewal, termination, etc.:
Universal Cotton Standards Advisory Committee, 32072

Centers for Disease Control and Prevention
NOTICES
Agency information collection activities:
Submission for OMB review; comment request, 32100–32101
Grants and cooperative agreements; availability, etc.:
Optimizing Strategies to Provide Sexually Transmitted Disease Partner Services Program, 32101–32105
Project CHOICES Efficacy Study, 32105–32107
State-based birth defects surveillance programs development and surveillance data use for public health program, 32107–32109
Meetings:
Energy-Related Epidemiologic Research Advisory Committee, 32110

Children and Families Administration
NOTICES
Grants and cooperative agreements; availability, etc.:
Adoption Opportunities Program et al.; correction, 32110–32111
Head Start and Early Head Start—
Higher Education Faculty Initiative, 32111–32112
Meetings:
Medical Child Support Working Group, 32112–32113

Coast Guard
RULES
Anchorage regulations and ports and waterways safety:
OPSAIL 2000, Delaware River, PA; regulated areas, 32023–32026

Commerce Department
See International Trade Administration
See National Oceanic and Atmospheric Administration

Committee for the Implementation of Textile Agreements
NOTICES
Cotton, wool, and man-made textiles:
Dominican Republic, 32079
Indonesia, 32079–32080
Romania, 32080

Defense Department
RULES
Acquisition regulations:
Audit of Federal operations and programs (OMB Circular A-73), 32041
Research, development, test, and evaluation budget category; definitions, 32040
Utility privatization, 32040–32041
PROPOSED RULES
Acquisition regulations:
Pollution control and clean air and water, 32065–32066
Profit incentives to produce innovative new technologies, 32066–32069

Education Department
NOTICES
Grants and cooperative agreements; availability, etc.:
Elementary and secondary education—
Arts in Education Competitive Program, 32080–32082

Employment and Training Administration
NOTICES
Adjustment assistance:
Alaska Petroleum Contractors, 32127–32128
Bugbee & Niles Co., Inc., 32128
Calvin Klein, 32128
Cominco Ltd., 32128
Katz Lace Corp., 32129
Peninsula Light Metals et al., 32129–32130
PMC Specialties Group et al., 32130
NAFTA transitional adjustment assistance
Dana Corp. et al., 32126–32127

Energy Department
See Federal Energy Regulatory Commission
NOTICES
Defense Nuclear Facilities Safety Board recommendations:
Configuration management, vital safety systems, 32082
Meetings:
Environmental Management Site-Specific Advisory Board—
Nevada Test Site, NV, 32082
Rocky Flats, CO, 32082–32083

Environmental Protection Agency
RULES
Air pollution control:
Operating permits programs; interim approval expiration dates; extension, 32035–32040
Air quality implementation plans; approval and promulgation; various States; air pollution; standards of performance for new stationary sources:
South Dakota, 32033–32035
Air quality implementation plans; approval and promulgation; various States:
Iowa; correction, 32030–32033
Minnesota, 32028–32030
Hazardous waste:
Identification and listing—
Fossil fuels combustion wastes; regulatory determination, 32213–32237

PROPOSED RULES
Air quality implementation plans; approval and promulgation; various States:
Minnesota, 32057–32058
Superfund program:
National oil and hazardous substances contingency plan—
National priorities list update, 32058–32060
NOTICES
Meetings:
Science Advisory Board, 32089–32090
Senior Executive Service:
Performance Review Board; membership, 32088–32089
Superfund; response and remedial actions, proposed settlements, etc.:
Nahant Marsh Site, IA, 32090–32091
Water pollution control:
Marine discharges of vessel sewage, prohibition; petitions, etc.—
New Jersey, 32091–32092
Utah and Arizona, 32093–32094

Federal Aviation Administration
RULES
Airworthiness directives:
Bell, 32021–32023
Eurocopter France, 32015–32021
Gulfstream, 32011–32013
Israel Aircraft Industries, Ltd., 32013–32015
Class D airspace, 32023
PROPOSED RULES
Class E airspace, 32046–32048
NOTICES
Exemption petitions; summary and disposition, 32147
Passenger facility charges; applications, etc.:
Missoula International Airport, MT, 32147–32148

Federal Communications Commission
NOTICES
Agency information collection activities:
Reporting and recordkeeping requirements, 32094

Federal Deposit Insurance Corporation
NOTICES
Agency information collection activities:
Submission for OMB review; comment request, 32094

Federal Election Commission
NOTICES
Presidential campaign committees; computerized magnetic media requirements, 32094–32095

Federal Emergency Management Agency
NOTICES
Disaster and emergency areas:
Kansas, 32095
Missouri, 32095–32096
New Mexico, 32096–32097
Radiological emergency; State plans:
Rhode Island, 32097–32098

Federal Energy Regulatory Commission
NOTICES
Hydroelectric applications, 32087–32088
Meetings; Sunshine Act, 32088
Applications, hearings, determinations, etc.:
Canyon Creek Compression Co., 32083
French Broad Electric Membership Corp., 32083–32084
High Island Offshore System, L.L.C., 32084
Kinder Morgan Interstate Gas Transmission LLC, 32084
Natural Gas Pipeline Co. of America, 32084–32085
New England Power Pool, 32085
Questar Pipeline Co., 32085
South Carolina Electric & Gas Co., 32085–32086
Southern Natural Gas Co., 32086
Trailblazer Pipeline Co., 32086
U-T Offshore System, L.L.C., 32086
Williston Basin Interstate Pipeline Co., 32087

Federal Highway Administration
NOTICES
Environmental statements; notice of intent:
Franklin and Licking Counties, OH, 32148

Federal Motor Carrier Safety Administration
PROPOSED RULES
Motor carrier safety standards:
Drivers' hours of service—
Fatigue prevention; driver rest and sleep for safe operations; hearings, 32070
NOTICES
Meetings:
Illinois; Commercial Drivers License Program, 32148–32149

Federal Reserve System
NOTICES
Agency information collection activities:
Proposed collection; comment request, 32098–32099
Banks and bank holding companies:
Change in bank control, 32099
Formations, acquisitions, and mergers, 32099
Permissible nonbanking activities, 32099–32100

Federal Trade Commission
NOTICES
Children's online privacy protection; opportunity to participate and obtain co-sponsorship in agency public awareness campaign, 32100

Fish and Wildlife Service
NOTICES
Endangered and threatened species permit applications, 32120–32121
Marine mammals permit applications, 32077–32078

Food and Drug Administration
NOTICES
Food for human consumption:
Food labeling—
Dietary supplements containing ephedrine alkaloids; adverse event reports, etc., 32113–32114
Meetings:
Blood Products Advisory Committee, 32114

Forest Service
NOTICES
Meetings:
Southwest Oregon Province Interagency Executive Committee Advisory Committee, 32074–32075

Health and Human Services Department
See Centers for Disease Control and Prevention
See Children and Families Administration
See Food and Drug Administration
See Health Resources and Services Administration

See Inspector General Office, Health and Human Services Department

Health Care Financing Administration
See Inspector General Office, Health and Human Services Department

Health Resources and Services Administration
NOTICES
Agency information collection activities:
Submission for OMB review; comment request, 32114–32115
Competitive comprehensive grants preview (1999 FY); availability; HIV/AIDS Programs, Special Projects of National Significance cancelled, 32115
Grants and cooperative agreements; availability, etc.:
Model interventions to increase organ and tissue donation, 32115
Meetings:
Maternal and Child Health Research Grants Review Committee, 32115–32116

Housing and Urban Development Department
PROPOSED RULES
Privacy Act; implementation, 32239–32241
NOTICES
Privacy Act:
Systems of records, 33241–33246
Public and Indian housing:
Housing assistance payments (Section 8)—
Housing choice voucher, rental certificate, and moderate rehabilitation programs; administrative fees; annual factors; correction, 32116–32120

Inspector General Office, Health and Human Services Department
PROPOSED RULES
Medicare and State health care programs; fraud and abuse:
Ambulance restocking safe harbor under anti-kickback statute, 32060–32065

Interior Department
See Fish and Wildlife Service
See National Park Service

Internal Revenue Service
RULES
Income taxes, etc.:
Withholding of tax on certain U.S. source income paid to foreign persons and related collection, deposit, refunds, and credits, etc., 32151–32212
NOTICES
Agency information collection activities:
Proposed collection; comment request, 32149–32150

International Trade Administration
NOTICES
North American Free Trade Agreement (NAFTA); binational panel reviews:
Contrast media used for radiographic imaging from—
United States, 32075
Urea from—
United States and Russian Federation, 32075–32076

Justice Department
NOTICES
Pollution control; consent judgments:
Alpha Metals, Inc., et al., 32123–32124
Cedar Wood Apartments, Inc., et al., 32124
Enzyme Bio-Systems, Ltd., 32124–32125
Scott County Sportsmen's Association, 32125
Privacy Act:
Systems of records, 32125–32126

Labor Department
See Employment and Training Administration

National Aeronautics and Space Administration
PROPOSED RULES
Acquisition regulations:
NASA Inspector General hotline posters, 32069–32070

National Archives and Records Administration
NOTICES
Meetings:
Records of Congress Advisory Committee, 32130

National Credit Union Administration
RULES
Credit unions:
Truth in Savings Act—
Annual percentage yield calculation and model clauses and sample forms; appendices added; CFR correction, 32010–32011

National Oceanic and Atmospheric Administration
RULES
Fishery conservation and management:
Northeastern United States fisheries—
Atlantic surf clam, ocean quahog, and Maine mahogany quahog, 32042–32043
PROPOSED RULES
Fishery conservation and management:
Alaska; fisheries of Exclusive Economic Zone—
Halibut, 32070–32071
Ocean and coastal resource management:
Marine sanctuaries—
Gulf of Farallones National Marine Sanctuary, CA; motorized personal watercraft operation, 32048–32057
NOTICES
Meetings:
North Pacific Fishery Management Council, 32076–32077
Permits:
Marine mammals, 32077–32078
Reports and guidance documents; availability, etc.:
Fishery management actions; economic analysis, 32078–32079

National Park Service
NOTICES
Environmental statements; availability, etc.:
Missouri National Recreation River, NE and SD; general management plan, 32121
Niobrara National Scenic River, NE; general management plan, 32121–32122
Environmental statements; notice of intent:
Cumberland Island National Seashore, GA; various plans, 32122
Ebey's Landing National Historical Reserve, WA; general management plan, 32122–32123
Meetings:
Boston Harbor Islands Advisory Council, 32123
National Preservation Technology and Training Board, 32123

National Science Foundation
NOTICES
Meetings:
Electrical and Communications Systems Special Emphasis Panel, 32130–32131
Engineering Education and Centers Special Emphasis Panel, 32131
Experimental and Integrative Activities Special Emphasis Panel, 32131
Graduate Education Special Emphasis Panel, 32131
Research, Evaluation, and Communication Special Emphasis Panel, 32131–32132

Natural Resources Conservation Service
NOTICES
Field office technical guides; changes:
Tennessee, 32075

Nuclear Regulatory Commission
NOTICES
Applications, hearings, determinations, etc.:
AmerGen Energy Co., LLC, 32132–32133

Personnel Management Office
NOTICES
Excepted service:
Schedules A, B, and C; positions placed or revoked—Update, 32133–32135
Meetings:
Federal Prevailing Rate Advisory Committee, 32135
Personnel management demonstration projects:
Army Department—
U.S. Army Engineer Research and Development Center, Vicksburg, MS, 32135–32136

Postal Service
RULES
Practice and procedure:
False representation and lottery orders; proceedings; subpoenas and civil penalties, 32026–32028
NOTICES
Privacy Act:
Systems of records, 32136–32138

Public Health Service
See Centers for Disease Control and Prevention
See Food and Drug Administration
See Health Resources and Services Administration

Securities and Exchange Commission
NOTICES
Self-regulatory organizations; proposed rule changes:
Chicago Board Options Exchange, Inc., 32138–32140
National Association of Securities Dealers, Inc., 32140

Small Business Administration
NOTICES
Disaster loan areas:
California, 32140–32141
Connecticut and Rhode Island, 32141
Kansas, 32141
Meetings:
Regional Fairness Boards—
South Atlantic States, 32141

Social Security Administration
NOTICES
Foreign insurance or pension systems:
Bosnia and Herzegovina, 32141–32142
Privacy Act:
Systems of records; correction, 32142–32145

State Department
NOTICES
Arms Export Control Act:
Export licenses; Congressional notifications, 32145–32147

Textile Agreements Implementation Committee
See Committee for the Implementation of Textile Agreements

Transportation Department
See Coast Guard
See Federal Aviation Administration
See Federal Highway Administration
See Federal Motor Carrier Safety Administration

Treasury Department
See Internal Revenue Service

Veterans Affairs Department
NOTICES
Meetings:
Former Prisoners of War Advisory Committee, 32150

Separate Parts In This Issue

Part II
Department of the Treasury, Internal Revenue Service, 32151–32212

Part III
Environmental Protection Agency, 32213–32237

Part IV
Department of Housing and Urban Development, 33239–33246

Reader Aids
Consult the Reader Aids section at the end of this issue for phone numbers, online resources, finding aids, reminders, and notice of recently enacted public laws.

CFR PARTS AFFECTED IN THIS ISSUE

A cumulative list of the parts affected this month can be found in the Reader Aids section at the end of this issue.

7 CFR
985 32007
1001 32010
1005 32010
1006 32010
1007 32010
1126 32010
1131 32010
1135 32010
Proposed Rules:
930 32044

12 CFR
707 32010

14 CFR
39 (6 documents) 32011, 32013, 32015, 32016, 32018, 32021
71 32023
Proposed Rules:
71 (2 documents) 32046, 32047

15 CFR
Proposed Rules:
922 32048

24 CFR
Proposed Rules:
2003 32240

26 CFR
1 32152
31 32152

33 CFR
110 32023
165 32023

39 CFR
952 32026

40 CFR
52 (3 documents) 32028, 32030, 32033
60 32033
70 32035
261 32214
Proposed Rules:
52 32057
300 32058

42 CFR
Proposed Rules:
1001 32060

48 CFR
235 32040
241 32040
252 32041
Proposed Rules:
209 32065
215 32066
223 32065
1803 32069
1852 32069

49 CFR
Proposed Rules:
350 32070
390 32070
394 32070
395 32070
398 32070

50 CFR
648 32042
Proposed Rules:
679 32070

Rules and Regulations

Federal Register
Vol. 65, No. 99
Monday, May 22, 2000

This section of the FEDERAL REGISTER contains regulatory documents having general applicability and legal effect, most of which are keyed to and codified in the Code of Federal Regulations, which is published under 50 titles pursuant to 44 U.S.C. 1510.

The Code of Federal Regulations is sold by the Superintendent of Documents. Prices of new books are listed in the first FEDERAL REGISTER issue of each week.

DEPARTMENT OF AGRICULTURE

Agricultural Marketing Service

7 CFR Part 985

[Docket No. FV00–985–3 FIR]

Marketing Order Regulating the Handling of Spearmint Oil Produced in the Far West; Revision of the Salable Quantity and Allotment Percentage for Class 3 (Native) Spearmint Oil for the 1999–2000 Marketing Year

AGENCY: Agricultural Marketing Service, USDA.

ACTION: Final rule.

SUMMARY: The Department of Agriculture (Department) is adopting, as a final rule, without change, the provisions of an interim final rule that increased the quantity of Class 3 (Native) spearmint oil produced in the Far West that handlers may purchase from, or handle for, producers during the 1999–2000 marketing year. This interim final rule amended a prior interim final rule. When combined, the two interim final rules increased the Native spearmint oil salable quantity by 184,160 pounds from 1,125,755 pounds to 1,309,915 pounds, and the allotment percentage by 9 percent from 55 percent to 64 percent. The Spearmint Oil Administrative Committee (Committee), the agency responsible for local administration of the marketing order for spearmint oil produced in the Far West, recommended these actions to avoid extreme fluctuations in supplies and prices, and, thus, help to maintain stability in the Far West spearmint oil market.

EFFECTIVE DATE: June 21, 2000.

FOR FURTHER INFORMATION CONTACT: Robert J. Curry, Northwest Marketing Field Office, Marketing Order Administration Branch, Fruit and Vegetable Programs, AMS, USDA, 1220 SW Third Avenue, room 385, Portland, Oregon 97204–2807; telephone: (503) 326–2724, Fax: (503) 326–7440; or

George Kelhart, Technical Advisor, Marketing Order Administration Branch, Fruit and Vegetable Programs, AMS, USDA, room 2525–S, P.O. Box 96456, Washington, DC 20090–6456; telephone: (202) 720–2491, Fax: (202) 720–5698.

Small businesses may request information on complying with this regulation by contacting Jay Guerber, Marketing Order Administration Branch, Fruit and Vegetable Programs, AMS, USDA, room 2525–S, P.O. Box 96456, Washington, DC 20090–6456; telephone (202) 720–2491; Fax: (202) 720–5698, or E-mail: Jay.Guerber@usda.gov.

SUPPLEMENTARY INFORMATION: This rule is issued under Marketing Order No. 985 (7 CFR part 985), regulating the handling of spearmint oil produced in the Far West (Washington, Idaho, Oregon, and designated parts of Nevada, and Utah), hereinafter referred to as the ''order.'' The order is effective under the Agricultural Marketing Agreement Act of 1937, as amended (7 U.S.C. 601–674), hereinafter referred to as the ''Act.''

The Department of Agriculture (Department) is issuing this rule in conformance with Executive Order 12866.

This rule has been reviewed under Executive Order 12988, Civil Justice Reform. Under the provisions of the marketing order now in effect, salable quantities and allotment percentages may be established for classes of spearmint oil produced in the Far West. This rule continues an increase in the quantity of Native spearmint oil produced in the Far West that may be purchased from or handled for producers by handlers during the 1999–2000 marketing year, which ends on May 31, 2000. This rule will not preempt any State or local laws, regulations, or policies, unless they present an irreconcilable conflict with this rule.

The Act provides that administrative proceedings must be exhausted before parties may file suit in court. Under section 608c(15)(A) of the Act, any handler subject to an order may file with the Secretary a petition stating that the order, any provision of the order, or any obligation imposed in connection with the order is not in accordance with law and request a modification of the order or to be exempted therefrom. A handler is afforded the opportunity for a hearing on the petition. After the hearing the Secretary would rule on the petition. The Act provides that the district court of the United States in any district in which the handler is an inhabitant, or has his or her principal place of business, has jurisdiction to review the Secretary's ruling on the petition, provided an action is filed not later than 20 days after the date of the entry of the ruling.

The U.S. production of spearmint oil is concentrated in the Far West, primarily Washington, Idaho, and Oregon (part of the area covered by the order). Spearmint oil is also produced in the Midwest. The production area covered by the order normally accounts for approximately 63 percent of the annual U.S. production of Scotch spearmint oil and approximately 93 percent of the annual U.S. production of Native spearmint oil.

This final rule adopts, without change, the provisions of an interim final rule published in the **Federal Register** on March 24, 2000 (65 FR 15832) that amended an interim final rule that was published in the **Federal Register** on February 10, 2000 (65 FR 6528). The two rules together increased the Native spearmint oil salable quantity that handlers may purchase from, or handle for, producers during the 1999–2000 marketing year, which ends on May 31, 2000, by 184,160 pounds from 1,125,755 pounds to 1,309,915 pounds. The rules also increased the 1999–2000 allotment percentage by a total of 9 percent, from 55 percent to 64 percent.

The initial salable quantity and allotment percentages for Scotch and Native spearmint oils for the 1999–2000 marketing year were recommended by the Committee at its October 7, 1998 meeting. The Committee recommended salable quantities of 1,199,190 pounds and 1,125,755 pounds, and allotment percentages of 65 percent and 55 percent, respectively, for Scotch and Native spearmint oils. A proposed rule was published in the November 17, 1998 issue of the **Federal Register** (63 FR 63804). A final rule establishing the salable quantities and allotment percentages for Scotch and Native spearmint oils for the 1999–2000 marketing year was published in the January 19, 1999, issue of the **Federal Register** (64 FR 2799).

The salable quantity is the total quantity of each class of oil that handlers may purchase from, or handle for, producers during a marketing year. The salable quantity calculated by the Committee is based on the estimated trade demand. The total salable quantity is divided by the total industry allotment base to determine an allotment percentage. Each producer is allotted a share of the salable quantity by applying the allotment percentage to the producer's individual allotment base for the applicable class of spearmint oil.

Sections 985.50, 985.51, and 985.52 provide the Committee authorization to consider and recommend salable quantities and allotment percentages for each class of spearmint oil for an ensuing marketing year. Section 985.51(b) provides the authority for the Committee to recommend that an increase in the salable quantity and allotment percentage for either or both classes of oil be considered.

Taking into consideration the following discussion on adjustments to the Native spearmint oil salable quantity, the 1999–2000 marketing year salable quantity of 1,125,755 pounds will, therefore, be increased to 1,309,915 pounds.

The original total industry allotment base for Native spearmint oil for the 1999–2000 marketing year was established at 2,046,828 pounds and was revised during the year to 2,046,214 pounds to reflect a loss of 614 pounds of base due to non-production of some producers' total annual allotments. The Committee has used this revised allotment base in computing the increases to the Native spearmint oil salable quantity.

By increasing the salable quantity and allotment percentage from 1,125,755 pounds to 1,309,915 pounds, and 55 percent to 64 percent, respectively, this final rule makes an additional amount of Native spearmint oil available by releasing such oil from the reserve pool. When applied to each individual producer, the additional 9 percent allotment percentage increase allows each producer to take up to an amount equal to 9 percent of their allotment base from their Native spearmint oil reserve. If a producer does not have any reserve pool oil, or has less than 9 percent of their allotment base in the reserve pool, the increase in allotment percentage will actually make less than such amount available to the market.

For the 1999–2000 marketing year, producers receiving 18,324 pounds of additional allotment through these increases did not have any Native spearmint oil in reserve. Thus, rather than the 184,160 additional pounds as computed in the two interim final rules, this action effectively makes an additional 165,836 pounds of Native spearmint oil available to the market.

Summary of the Native Spearmint Oil Increases for the 1999–2000 Marketing Year

(A) Estimated 1999–2000 Allotment Base—2,046,828 pounds. This is the figure the original 1999–2000 salable quantities and allotment percentages for both classes of spearmint oil were based on.

(B) Revised 1999–2000 Allotment Base—2,046,214 pounds. This is 614 pounds less than the estimated allotment base of 2,046,828 pounds. This is less because some producers failed to produce all of their previous year's allotment.

(C) Initial 1999–2000 Allotment Percentage—55 percent. This was recommended by the Committee on October 7, 1998.

(D) Initial 1999–2000 Salable Quantity—1,125,755 pounds. This figure is 55 percent of the estimated allotment base of 2,046,828 pounds.

(E) Initial Increase in Allotment Percentage—5 percent. This was recommended by the Committee on January 13, 2000.

(F) Initial Revision of the 1999–2000 Allotment Percentage—60 percent. This figure was derived by adding the initial increase in the allotment percentage of 5 percent to the initial 1999–2000 allotment percentage of 55 percent and was effective on February 11, 2000.

(G) Initial Computed Increase in the 1999–2000 Salable Quantity—102,311 pounds. This is the product of the revised 1999–2000 allotment base of 2,046,214 and the initial 5 percent increase.

(H) Initially Revised 1999–2000 Salable Quantity—1,228,066 pounds. This figure, effective on February 11, 2000, is the sum of the initial salable quantity of 1,125,755 pounds and the initial computed increase of 102,311 pounds, and is approximately 60 percent of the estimated 1999–2000 allotment base of 2,046,214 pounds.

(I) Additional Increase in the Allotment Percentage—4 percent. This percentage increase was recommended by the Committee at its February 23, 2000, meeting.

(J) Amended 1999–2000 Allotment Percentage—64 percent. This is the sum of the initial allotment percentage of 55 percent and the 5 and 4 percent increases, and was effective on March 25, 2000.

(K) Additional Computed Increase in the 1999–2000 Salable Quantity—81,849 pounds. This is the product of the revised 1999–2000 allotment base of 2,046,214 pounds and the additional 4 percent increase in the allotment percentage.

(L) Final 1999–2000 Salable Quantity as Revised by Both Interim Final Rules—1,309,915 pounds. This figure is the sum of the initial salable quantity of 1,125,755 and the combined (computed) increases of 102,311 pounds and 81,849 pounds, and is approximately 64 percent of the revised 1999–2000 allotment base of 2,046,214 pounds.

The Department, based on its analysis of available information, has determined that the salable quantity and allotment percentage for Native spearmint oil for the 1999–2000 marketing year should continue to be 1,309,915 pounds and 64 percent, respectively.

This rule continues to relax the regulation of Native spearmint oil and will allow producers to meet market needs and improve returns. In conjunction with the issuance of this rule, the Department has reviewed the Committee's revised marketing policy statement for the 1999–2000 marketing year. The Committee's marketing policy statement, a requirement whenever the Committee recommends implementing volume regulations or recommends revisions to existing volume regulations, meets the intent of section 985.50 of the order.

During its discussion of revising the 1999–2000 salable quantities and allotment percentages, the Committee considered: (1) The estimated quantity of salable oil of each class held by producers and handlers; (2) the estimated demand for each class of oil; (3) prospective production of each class of oil; (4) total of allotment bases of each class of oil for the current marketing year and the estimated total of allotment bases of each class for the ensuing marketing year; (5) the quantity of reserve oil, by class, in storage; (6) producer prices of oil, including prices for each class of oil; and (7) general market conditions for each class of oil, including whether the estimated season average price to producers is likely to exceed parity. Conformity with the Department's ''Guidelines for Fruit, Vegetable, and Specialty Crop Marketing Orders'' has also been reviewed and confirmed.

This increase in the 1999–2000 marketing year Native spearmint oil salable quantity and allotment percentage allows for anticipated market needs for this class of oil. In determining anticipated market needs, consideration by the Committee was given to historical sales, and changes and trends in production and demand.

Pursuant to requirements set forth in the Regulatory Flexibility Act (RFA), the AMS has considered the economic impact of this action on small entities. Accordingly, the AMS has prepared this final regulatory flexibility analysis.

The purpose of the RFA is to fit regulatory actions to the scale of business subject to such actions in order that small businesses will not be unduly or disproportionately burdened. Marketing orders issued pursuant to the Act, and rules issued thereunder, are unique in that they are brought about through group action of essentially small entities acting on their own behalf. Thus, both statutes have small entity orientation and compatibility.

There are 7 spearmint oil handlers subject to regulation under the marketing order and approximately 119 producers of Scotch spearmint oil and 105 producers of Native spearmint oil in the regulated production area. Small agricultural service firms are defined by the Small Business Administration (SBA) (13 CFR 121.201) as those having annual receipts of less than $5,000,000, and small agricultural producers have been defined as those whose annual receipts are less than $500,000.

Based on the SBA's definition of small entities, the Committee estimates that 2 of the 7 handlers regulated by the order could be considered small entities. Most of the handlers are large corporations involved in the international trading of essential oils and the products of essential oils. In addition, the Committee estimates that 25 of the 119 Scotch spearmint oil producers and 7 of the 105 Native spearmint oil producers would be classified as small entities under the SBA definition. Thus, a majority of handlers and producers of Far West spearmint oil may not be classified as small entities.

The Far West spearmint oil industry is characterized by producers whose farming operations generally involve more than one commodity, and whose income from farming operations is not exclusively dependent on the production of spearmint oil. Crop rotation is an essential cultural practice in the production of spearmint oil for weed, insect, and disease control. A normal spearmint oil producing operation would have enough acreage for rotation such that the total acreage required to produce the crop would be about one-third spearmint and two-thirds rotational crops. An average spearmint oil producing farm would, thus, have to have considerably more acreage than would be planted to spearmint during any given season. To remain economically viable with the added costs associated with spearmint oil production, most spearmint oil producing farms would fall into the category of large businesses.

Small spearmint oil producers represent a minority of farming operations and are more vulnerable to market fluctuations. Such small farmers generally need to market their entire annual crop and do not have the resources to cushion seasons with poor spearmint oil returns. Conversely, large diversified producers have the potential to endure one or more seasons of poor spearmint oil markets because of stronger incomes from alternate crops which could support the operation for a period of time. Despite the advantage larger producers may have, increasing the Native salable quantity and allotment percentage will help both large and small producers by improving returns.

This rule finalizes an interim final rule that was published in the **Federal Register** on March 24, 2000 (65 FR 15832) that amended an interim final rule that was published in the **Federal Register** on February 10, 2000 (65 FR 6528). The initial interim final rule increased the 1999–2000 marketing year Native spearmint oil salable quantity by 102,311 pounds from 1,125,755 pounds to 1,228,066 pounds, and the allotment percentage by 5 percent from 55 percent to 60 percent. The amended interim final rule increased the 1999–2000 marketing year Native spearmint oil salable quantity by an additional 81,849 pounds from 1,228,066 pounds to 1,309,915 pounds, and the allotment percentage by an additional 4 percent from 60 percent to 64 percent. This rule continues to relax the regulation of Native spearmint oil and will allow producers to meet market needs and improve returns.

The Committee considered alternatives to the increases based on projections and historical data available at both meetings. Recommendations at both meetings generally supported increases of 5 percent and 4 percent, respectively. The Committee reached its recommendations to increase the Native spearmint oil salable quantity by 102,311 pounds and 81,849 pounds, respectively, and the allotment percentage by 5 percent and 4 percent, respectively, after careful consideration of all available information. The Committee believes that the level attained in this final rule will achieve the objectives sought. Without the increases, the Committee believes the industry will not be able to meet market needs through the end of the current marketing year (May 31, 2000).

Annual salable quantities and allotment percentages have been issued for both classes of spearmint oil since the order's inception. Reporting and recordkeeping requirements have remained the same for each year of regulation. Accordingly, this action will not impose any additional reporting or recordkeeping requirements on either small or large spearmint oil producers and handlers. All reports and forms associated with this program are reviewed periodically in order to avoid unnecessary and duplicative information collection by industry and public sector agencies. The Department has not identified any relevant Federal rules that duplicate, overlap, or conflict with this rule.

The Committee's meetings were widely publicized throughout the spearmint oil industry and all interested persons were invited to attend and participate on all issues. Interested persons were also invited to submit information on the regulatory and informational impacts of this action on small businesses.

Interim final rules concerning this action were published in the **Federal Register** on February 10, 2000 (65 FR 6528), and on March 24, 2000 (65 FR 15832). Copies of the rules were mailed and faxed to the Committee office, which in turn notified Committee members and spearmint oil producers and handlers. In addition, the Committee's meetings were widely publicized throughout the spearmint oil industry and all interested persons were invited to attend and participate on all issues. Copies of both rules were also made available on the Internet by the U.S. Government Printing Office. No comments were received.

A small business guide on complying with fruit, vegetable, and specialty crop marketing agreements and orders may be viewed at the following website: http://www.ams.usda.gov/fv/moab.html. Any questions about the compliance guide should be sent to Jay Guerber at the previously mentioned address in the **FOR FURTHER INFORMATION CONTACT** section.

After consideration of all relevant matter presented, including that contained in the prior proposed and final rules in connection with the establishment of the salable quantities and allotment percentages for Scotch and Native spearmint oils for the 1999–2000 marketing year, both interim final rules increasing the 1999–2000 marketing year Native spearmint oil salable quantity and allotment percentage, the Committee's recommendations and other available information, it is found that to continue

to revise § 985.218 to change the salable quantity and allotment percentage for Native spearmint oil, as hereinafter set forth, will tend to effectuate the declared policy of the Act.

List of Subjects in 7 CFR Part 985

Marketing agreements, Oils and fats, Reporting and recordkeeping requirements, Spearmint oil.

For the reasons set forth in the preamble, 7 CFR part 985 is amended as follows:

PART 985—MARKETING ORDER REGULATING THE HANDLING OF SPEARMINT OIL PRODUCED IN THE FAR WEST

Accordingly, the interim final rule amending 7 CFR part 985 as published at 65 FR 15832 on March 24, 2000, and which amended the interim final rule published at 65 FR 6528 on February 10, 2000, is adopted as a final rule without change.

Dated: May 16, 2000.

Robert C. Keeney,

Deputy Administrator, Fruit and Vegetable Programs.

[FR Doc. 00–12801 Filed 5–19–00; 8:45 am]

BILLING CODE 3410–02–P

DEPARTMENT OF AGRICULTURE

Agricultural Marketing Service

7 CFR Parts 1001, 1005, 1006, 1007, 1126, 1131, and 1135

[Docket No. DA–97–12]

Milk in the New England and Other Marketing Areas; Order Amending the Orders; Correction

AGENCY: Agricultural Marketing Service, USDA.

ACTION: Final rule; correction.

SUMMARY: The Agricultural Marketing Service published in the **Federal Register** on September 1, 1999, (64 FR 47898) a final rule which consolidated 31 Federal milk marketing orders into 11 orders. This document corrects an error in section 73 of 7 of those orders by changing the term ''pool plant operator'' to ''handler.'' The remaining 4 orders contain the correct language.

EFFECTIVE DATE: This correction is effective May 22, 2000.

FOR FURTHER INFORMATION CONTACT: Nicholas Memoli, Marketing Specialist, Order Formulation Branch, USDA/AMS/Dairy Programs, Room 2971, South Building, P.O. Box 96456, Washington, DC 20090–6456, (202) 690–1932, e-mail address Nicholas.Memoli@usda.gov.

SUPPLEMENTARY INFORMATION:

Background and Need for Correction

In the final rule (DA–97–12) issued August 23, 1999, and published in the **Federal Register** on September 1, 1999 (64 FR 47898), an error in Section 73(a) and (b) of Parts 1001, 1005, 1006, and 1007, and Section 73(b) of Parts 1126, 1131, and 1135 was inadvertently made. Specifically, the term ''handler'' was changed to ''pool plant operator.'' The correct term is used in the 4 remaining orders (Parts 1030, 1032, 1033 and 1124) and is only different in the 7 orders because of an oversight in drafting the amendments to the orders. Therefore, the applicable provisions of the 7 orders need to be corrected.

List of Subjects in 7 CFR Parts 1000 to 1199

Milk orders.

Accordingly, 7 CFR Parts 1001, 1005, 1006, 1007, 1126, 1131, and 1135 are corrected by making the following correcting amendments:

PARTS 1001, 1005, 1006, 1007, 1126, 1131, and 1135—[AMENDED]

1. The authority citation for Parts 1001, 1005, 1006, 1007, 1126, 1131, and 1135 continues to read as follows:

Authority: 7 U.S.C. 601–674, and 7253.

§§ 1001.73, 1005.73, 1006.73, 1007.73, 1126.73, 1131.73, 1135.73 [Amended]

2. In the introductory text of §§ 1001.73(a) and (b), 1005.73(a) and (b), 1006.73(a) and (b), 1007.73(a) and (b), 1126.73(b), 1131.73(b), and 1135.73(b), the words ''pool plant operator'' are revised to read ''handler.''

Dated: May 17, 2000.

Kenneth C. Clayton,

Acting Administrator, Agricultural Maketing Service.

[FR Doc. 00–12799 Filed 5–19–00; 8:45 am]

BILLING CODE 3410–02–P

NATIONAL CREDIT UNION ADMINISTRATION

12 CFR Part 707

Truth in Savings

CFR Correction

In Title 12 of the Code of Federal Regulations, parts 600 to End, revised as of January 1, 2000, page 404, Part 707, Appendix C is corrected by adding Appendices A and B to the end to read as follows:

APPENDIX C TO PART 707—OFFICIAL STAFF INTERPRETATIONS

* * * * *

Appendix A to Part 707—Annual Percentage Yield Calculation

Part I. Annual Percentage Yield for Account Disclosures and Advertising Purposes

1. *Rounding for calculations.* The following are examples of permissible rounding rules for calculating dividends and the annual percentage yield:

i. The daily rate applied to a balance carried to five or more decimals. For example; .008219178%, 3.00% for a 365 day year, would be rounded to no less than .00822%.

ii. The daily dividends or interest earned carried to five or more decimals. For example; $.08219178082, daily dividends on $1,000 at 3% for a 365 day year, would be rounded to no less than $.08219.

2. *Exponents in a leap year.* The annual percentage yield formula's exponent numerator will remain 365 in leap years. The ''days in term'' figure used in the denominator should be consistent with the length of term used in the dividends calculation.

3. *First tier of a tiered-rate account.* When credit unions use a rate table, the first tier of a tiered rate account is to be disclosed and advertised; ''Up to but not exceeding * * *'', ''$.01 to * * *'', or similar language.

4. *Term Share Accounts Opened in Midterm.* For club accounts that meet the definition of a term share account, the annual percentage yield is based on the maximum number of days in the term not to exceed 365 days (or 366 days in a leap year).

Part II. Annual Percentage Yield Earned for Periodic Statements

1. *Balance method.* The dividend or interest figure used in the calculation of the annual percentage yield earned may be derived from the daily balance method or the average daily balance method. Regardless of the dividend calculation method, the balance used in the annual percentage yield earned formula is the average daily balance. The average daily balance calculation is the sum of the balances for each day in the period divided by the number of days in the period. The balance for each day is based on a point in time; i.e. beginning of day balance, end of day balance, closing of day balance, etc. Each day's balance, for dividend accrual and payment purposes, must be based on the same point in time and cannot be based on the day's low balance.

2. *Negative balances prohibited.* Credit unions must treat a negative account balance as zero to determine the balance on which the annual percentage yield earned is calculated. (See commentary to § 707.7(a)(2).)

A. General Formula

1. *Accrued but uncredited dividends.* To calculate the annual percentage yield earned, accrued but uncredited dividends:

i. May not be included in the balance for statements that are issued at the same time or less frequently than the account's compounding and crediting frequency. For

example, if monthly statements are sent for an account that compounds dividends daily and credits dividends monthly, the balance may not be increased each day to reflect the effect of daily compounding. Assume a credit union will pay $13.70 in dividends on $100,000 for the first day, $6.85 in dividends on $50,013.70 for the second day, and $3.43 in dividends on $25,020.55 for the third day. The sum of each days balance is $175,000 (does not include accrued, but uncredited, dividends amounts $13.70, $6.85, and $3.43), thereby resulting in an average daily balance for the three days of $58,333.33.

ii. Must be included in the balance for succeeding statements if a statement is issued more frequently than compounded dividends is credited on an account. For example, if monthly statements are sent for an account that compounds dividends daily and credits dividends quarterly, the balance for the second monthly statement would include dividends that had accrued for the prior month. Assume a credit union will pay $411.78 in dividends on 30 days of $100,000, $427.28 in dividends on 31 days of $100,411.78, and $415.23 in dividends on 30 days of $100,839.06. The balance (average daily balance in the account for the period) for the second 31 days is $100,411.78.

2. *Rounding.* The dividends earned figure used to calculate the annual percentage yield earned must be rounded to two decimals to reflect the amount actually paid. For example, if the dividends earned for a statement period is $20.074 and the credit union pays the member $20.07, the credit union must use $20.07 (not $20.074) to calculate the annual percentage yield earned. For accounts that pay dividends based on the daily balance method, compound and credit dividends or interest quarterly, and send monthly statements, the credit union may, but need not, round accrued dividends to two decimals for calculating the ''projected'' or ''anticipated'' annual percentage yield earned on the first two monthly statements issued during the quarter. However, on the quarterly statement the dividends earned figure must reflect the amount actually paid.

3. *Compounding frequency using the average daily balance method.* Any compounding frequency, including daily compounding, can be used when calculating dividends using the average daily balance method. (See comment 707.7(b), which does not require credit unions to compound or credit dividends at any particular frequency).

B. Special Formula for Use Where Periodic Statement is Sent More Often Than the Period for Which Dividends are Compounded

1. *Statements triggered by Regulation E.* Credit unions may, but need not, use this formula to calculate the annual percentage yield earned for accounts that receive quarterly statements and that are subject to Regulation E's rule calling for monthly statements when an electronic fund transfer has occurred. They may do so even though no monthly statement was issued during a specific quarter. This formula must be used for accounts that compound and credit dividends quarterly and that receive monthly statements, triggered by Regulation E, which comply with the provisions of § 707.6.

2. *Days in compounding period.* Credit unions using the special annual percentage yield earned formula must use the actual number of days in the compounding period.

Appendix B to Part 707—Model Clauses and Sample Forms

1. *Modifications.* Credit unions that modify the model clauses will be deemed in compliance as long as they do not delete information required by TISA or regulation or rearrange the format so as to affect the substance or clarity of the disclosures.

2. *Format.* Credit unions may use inserts to a document (see Sample Form B–11) or fill-in blanks (see Sample Forms B–4 and B–5, which use double underlining to indicate terms that have been filled in) to show current rates, fees or other terms.

3. *Disclosures for opening accounts.* The sample forms illustrate the information that must be provided to a member when an account is opened, as required by § 707.4(a)(1). (See § 707.4(a)(2), which states the requirements for disclosing the annual percentage yield, the dividend rate, and the maturity of a term share account in responding to a member's request.)

4. *Compliance with Regulation E.* Credit unions may satisfy certain requirements under Part 707 with disclosures that meet the requirements of Regulation E. (See § 707.3(c).) The model clauses and sample forms do not give examples of disclosures that would be covered by both this regulation and Regulation E (such as disclosing the amount of a fee for ATM usage). Credit unions should consult appendix A to Regulation E for appropriate model clauses.

5. *Duplicate disclosures.* If a requirement such as a minimum balance applies to more than one account term (to obtain a bonus and determine the annual percentage yield, for example), credit unions need not repeat the requirement for each term, as long as it is clear which terms the requirement applies to.

6. *Guide to model clauses.* In the model clauses, italicized words indicate the type of disclosure a credit union should insert in the space provided (for example, a credit union might insert ''March 25, 1995'' in the blank for ''(date)'' disclosure). Brackets and diagonals (''/'') indicate a credit union must choose the alternative that describes its practice (for example, [daily balance/average daily balance]).

7. *Sample forms.* The sample forms (B–4 through B–11) serve a purpose different from the model clauses. They illustrate various ways of adapting the model clauses to specific accounts. The clauses shown relate only to the specific transactions described.

[FR Doc. 00–55509 Filed 5–19–00; 8:45 am]

BILLING CODE 1505–01–D

DEPARTMENT OF TRANSPORTATION

Federal Aviation Administration

14 CFR Part 39

[Docket No. 99–NM–138–AD; Amendment 39–11735; AD 2000–10–11]

RIN 2120–AA64

Airworthiness Directives; Gulfstream Model G–159 Series Airplanes

AGENCY: Federal Aviation Administration, DOT.

ACTION: Final rule.

SUMMARY: This amendment adopts a new airworthiness directive (AD), applicable to certain Gulfstream Model G–159 series airplanes, that requires an inspection to determine the type of pneumatic deicing boots, and an Airplane Flight Manual (AFM) revision only for those airplanes equipped with ''modern'' boots. This amendment is prompted by reports of inflight incidents and an accident that occurred in icing conditions where the airframe pneumatic deicing boots were not activated. The actions specified by this AD are intended to ensure that flightcrews activate the pneumatic wing and tail deicing boots at the first signs of ice accumulation. This action will prevent reduced controllability of the aircraft due to adverse aerodynamic effects of ice adhering to the airplane prior to the first deicing cycle.

EFFECTIVE DATE: June 26, 2000.

ADDRESSES: Information pertaining to this amendment may be examined at the Federal Aviation Administration (FAA), Transport Airplane Directorate, Rules Docket, 1601 Lind Avenue, SW., Renton, Washington; or at the FAA, Small Airplane Directorate, Atlanta Aircraft Certification Office, One Crown Center, 1895 Phoenix Boulevard, suite 450, Atlanta, Georgia 30349.

FOR FURTHER INFORMATION CONTACT: Neil Berryman, Aerospace Engineer, Systems and Flight Test Branch, ACE–116A, FAA, Small Airplane Directorate, Atlanta Aircraft Certification Office, One Crown Center, 1895 Phoenix Boulevard, suite 450, Atlanta, Georgia 30349; telephone (770) 703–6098; fax (770) 703–6097.

SUPPLEMENTARY INFORMATION: A proposal to amend part 39 of the Federal Aviation Regulations (14 CFR part 39) to include an airworthiness directive (AD) that is applicable to Gulfstream Model G–159 series airplanes was published as a supplemental notice of proposed rulemaking (NPRM) in the **Federal Register** on November 18, 1999 (64 FR 62991). That action proposed to require

an inspection to determine the type of pneumatic deicing boots, and an airplane flight manual (AFM) change only for those airplanes equipped with ''modern'' boots.

Since the Issuance of the NPRM

The FAA has received information indicating that natural ice shedding, melting, or sublimation from the protected areas of the pneumatic deicing boot system of the wing and tail leading edge will eliminate most residual ice. In light of that information, the FAA has determined that a revision of the last bulleted paragraph of the airplane flight manual revision specified in paragraph (a) of the NPRM is necessary. Consequently, that paragraph has been revised from, ''The wing and tail leading edge pneumatic deicing boot system may be deactivated only after leaving icing conditions and after the airplane is determined to be clear of ice,'' to delete the phrase, ''and after the airplane is determined to be clear of ice.''

Comments

Interested persons have been afforded an opportunity to participate in the making of this amendment. Due consideration has been given to the comments received.

Request to Add Further Requirements

The commenter, the United Kingdom Civil Aviation Authority, requests that the statement in the supplemental notice of proposed rulemaking (NPRM) advising that a potential for adverse aerodynamic effects of ice adhering to the airplane exists should be addressed in more detail. The commenter explains that icing boots contaminated with dirt or in a deteriorated condition can induce such ice adhering to the airplane. The commenter points out that various cleaning and protection fluids are available that provide extended life to the deicing boots, protection of the boots against ultraviolet (UV) rays, and assistance in maintaining the boots in a clean condition. However, the commenter notes that not all maintenance programs schedule tasks effectively for the use of such cleaning and protection fluids. Therefore, the commenter requests that the FAA consider mandating a specific schedule to use such cleaning and protection products. The commenter states that such a required schedule should be required for airplanes equipped with either the ''modern'' or ''older'' boots.

The FAA does not concur with the commenter's requests. The FAA considers that normal wear and tear on the deicing boot materials is to be expected, and that the adhesion characteristics of the boot increases as the boot surface degrades over time. Operators have the responsibility to monitor the performance of the deicing boots installed on their airplanes, and to perform maintenance as required.

The FAA acknowledges that use of certain ice-phobic chemicals may provide an additional safety benefit. However, a variety of factors (*e.g.,* normal wear and tear, ''patching,'' and oxidation of boot material) exist in varying degrees on individual airplanes. As a result, the optimum frequency of application will vary during the life of the boot. The FAA has received no quantitative data to demonstrate the adequacy of particular amounts of ice-phobic chemical sprays or to provide adequate intervals of application. Therefore, the FAA cannot establish an appropriate application interval at this time. However, if additional data becomes available, the FAA may consider further rulemaking.

Conclusion

After careful review of the available data, including the comments noted above, the FAA has determined that air safety and the public interest require the adoption of the rule as proposed.

Cost Impact

The FAA estimates that 141 airplanes of U.S. registry will be affected by this AD.

The FAA estimates that it will take approximately 2 work hours per airplane to accomplish the AFM revision, at the average labor rate of $60 per work hour. Based on these figures, the cost impact of the AD on U.S. operators is estimated to be $16,920, or $120 per airplane.

The cost impact figure discussed above is based on assumptions that no operator has yet accomplished any of the requirements of this AD action, and that no operator would accomplish those actions in the future if this AD were not adopted.

Regulatory Impact

The regulations adopted herein will not have a substantial direct effect on the States, on the relationship between the national Government and the States, or on the distribution of power and responsibilities among the various levels of government. Therefore, it is determined that this final rule does not have federalism implications under Executive Order 13132.

For the reasons discussed above, I certify that this action (1) is not a ''significant regulatory action'' under Executive Order 12866; (2) is not a ''significant rule'' under DOT Regulatory Policies and Procedures (44 FR 11034, February 26, 1979); and (3) will not have a significant economic impact, positive or negative, on a substantial number of small entities under the criteria of the Regulatory Flexibility Act. A final evaluation has been prepared for this action and it is contained in the Rules Docket. A copy of it may be obtained from the Rules Docket at the location provided under the caption **ADDRESSES**.

List of Subjects in 14 CFR Part 39

Air transportation, Aircraft, Aviation safety, Safety.

Adoption of the Amendment

Accordingly, pursuant to the authority delegated to me by the Administrator, the Federal Aviation Administration amends part 39 of the Federal Aviation Regulations (14 CFR part 39) as follows:

PART 39—AIRWORTHINESS DIRECTIVES

1. The authority citation for part 39 continues to read as follows:

Authority: 49 U.S.C. 106(g), 40113, 44701.

§ 39.13 [Amended]

2. Section 39.13 is amended by adding the following new airworthiness directive:

2000–10–11 Gulfstream Aerospace Corporation (Formerly Grumman): Amendment 39–11735. Docket 99–NM–138–AD.

Applicability: Model G–159 series airplanes equipped with pneumatic deicing boots, certificated in any category.

To ensure that flightcrews activate the wing and tail pneumatic deicing boots at the first signs of ice accumulation on the airplane, accomplish the following:

Note 1: For the purposes of this AD, the following definitions of ''older'' and ''modern'' apply:

''Modern'' pneumatic boot systems may be characterized by short segmented, small diameter tubes, which are operated at relatively high pressures [18–23 pounds per square inch (psi)] by excess bleed air that is provided by turbine engines. ''Older'' pneumatic boot systems may be characterized by long, uninterrupted, large diameter tubes, which were operated at low pressures by engine driven pneumatic pumps whose pressure varied with engine revolutions per minute (rpm). This low pressure coupled with long and large diameter tubes caused early de-ice systems to have very lengthy inflation and deflation cycles and dwell times. (Dwell time is the period of time that the boot remains fully expanded following the completion of the inflation cycle until the beginning of the deflation cycle.)

(a) Within 10 days after the effective date of this AD: Perform a visual inspection to determine if the types of pneumatic deicing boots installed are either ''older'' or ''modern'' boots.

(1) For those airplanes equipped with ''older'' pneumatic deicing boots, no further action is required by this AD.

(2) For those airplanes equipped with ''modern'' pneumatic deicing boots: Within 10 days after the inspection required by paragraph (a) of this AD, revise the Limitations Section of the FAA-approved Airplane Flight Manual (AFM) to include the following requirements for activation of the ice protection systems. This may be accomplished by inserting a copy of this AD in the AFM.

''• Except for certain phases of flight where the AFM specifies that deicing boots should not be used (e.g., take-off, final approach, and landing), compliance with the following is required.

''• Wing and Tail Leading Edge Pneumatic Deicing Boot System, if installed, must be activated:

—At the first sign of ice formation anywhere on the aircraft, or upon annunciation from an ice detector system, whichever occurs first; and

—The system must either be continued to be operated in the automatic cycling mode, if available; or the system must be manually cycled as needed to minimize the ice accretions on the airframe.

• The wing and tail leading edge pneumatic deicing boot system may be deactivated only after leaving icing conditions.''

(b) An alternative method of compliance or adjustment of the compliance time that provides an acceptable level of safety may be used if approved by the Manager, Atlanta Aircraft Certification Office, FAA, Small Airplane Directorate. The request shall be forwarded through an appropriate FAA Operations Inspector, who may add comments and then send it to the Manager, Atlanta ACO.

Note 2: Information concerning the existence of approved alternative methods of compliance with this AD, if any, may be obtained from the Atlanta ACO.

(c) Special flight permits may be issued in accordance with sections 21.197 and 21.199 of the Federal Aviation Regulations (14 CFR 21.197 and 21.199) to operate the airplane to a location where the requirements of this AD can be accomplished.

(d) This amendment becomes effective on June 26, 2000.

Issued in Renton, Washington, on May 15, 2000.

Donald L. Riggin,

Acting Manager, Transport Airplane Directorate, Aircraft Certification Service.

[FR Doc. 00–12672 Filed 5–19–00; 8:45 am]

BILLING CODE 4910–13–U

DEPARTMENT OF TRANSPORTATION

Federal Aviation Administration

14 CFR Part 39

[Docket No. 2000–NM–42–AD; Amendment 39–11728; AD 2000–10–04]

RIN 2120–AA64

Airworthiness Directives; Israel Aircraft Industries, Ltd., Model 1124 and 1124A Westwind Airplanes

AGENCY: Federal Aviation Administration, DOT.

ACTION: Final rule; request for comments.

SUMMARY: This amendment adopts a new airworthiness directive (AD) that is applicable to certain Israel Aircraft Industries, Ltd., Model 1124 and 1124A Westwind airplanes. This action requires a one-time X-ray inspection to detect missing rivets at the rib-to-spar connection of the aileron ribs, and corrective actions, if necessary. This action is necessary to prevent cracking of the aileron skin due to missing rivets, which could result in reduced structural integrity of the aileron and consequent reduced controllability of the airplane. This action is intended to address the identified unsafe condition.

DATES: Effective June 6, 2000.

The incorporation by reference of certain publications listed in the regulations is approved by the Director of the Federal Register as of June 6, 2000.

Comments for inclusion in the Rules Docket must be received on or before June 21, 2000.

ADDRESSES: Submit comments in triplicate to the Federal Aviation Administration (FAA), Transport Airplane Directorate, ANM–114, Attention: Rules Docket No. 2000–NM–42–AD, 1601 Lind Avenue, SW., Renton, Washington 98055–4056. Comments may be inspected at this location between 9:00 a.m. and 3:00 p.m., Monday through Friday, except Federal holidays. Comments may also be sent via the Internet using the following address: 9-anm-iarcomment@faa.gov. Comments sent via the Internet must contain ''Docket No. 2000–NM–42–AD'' in the subject line and need not be submitted in triplicate.

The service information referenced in this AD may be obtained from Galaxy Aerospace Corporation, One Galaxy Way, Fort Worth Alliance Airport, Fort Worth, Texas 76177. This information may be examined at the FAA, Transport Airplane Directorate, 1601 Lind Avenue, SW., Renton, Washington; or at the Office of the Federal Register, 800 North Capitol Street, NW., suite 700, Washington, DC.

FOR FURTHER INFORMATION CONTACT: Norman B. Martenson, Manager, International Branch, ANM–116, Transport Airplane Directorate, 1601 Lind Avenue, SW., Renton, Washington 98055–4056; telephone (425) 227–2110; fax (425) 227–1149.

SUPPLEMENTARY INFORMATION: The Civil Aviation Administration of Israel (CAAI), notified the FAA that an unsafe condition may exist on certain Israel Aircraft Industries, Ltd., Model 1124 and 1124A Westwind airplanes. The CAAI advises that rivets in the aileron structure have been reported missing. On one airplane, 5 of the 13 aileron ribs were missing rivets. Investigation revealed certain rivets may not have been installed during production. This condition, if not corrected, could result in reduced structural integrity of the aileron and consequent reduced controllability of the airplane.

Explanation of Relevant Service Information

The manufacturer has issued Israel Aircraft Industries 1124 Westwind Alert Service Bulletin No. 1124–27A–145, dated March 24, 2000, which describes procedures for a one-time X-ray inspection to detect missing rivets at the rib to spar connection of the aileron ribs, left and right sides, at work stations (WS) 158.00 through WS 246.00. The CAAI classified this alert service bulletin as mandatory and previously issued Israeli airworthiness directive 57–00–02–06, dated February 24, 2000, in order to assure the continued airworthiness of these airplanes in Israel.

FAA's Conclusions

These airplane models are manufactured in Israel and are type certificated for operation in the United States under the provisions of section 21.29 of the Federal Aviation Regulations (14 CFR 21.29) and the applicable bilateral airworthiness agreement. Pursuant to this bilateral airworthiness agreement, the CAAI has kept the FAA informed of the situation described above. The FAA has examined the findings of the CAAI, reviewed all available information, and determined that AD action is necessary for products of this type design that are certificated for operation in the United States.

Explanation of Requirements of Rule

Since an unsafe condition has been identified that is likely to exist or

develop on other airplanes of the same type design registered in the United States, this AD is being issued to prevent cracking of the aileron skin due to missing rivets, which could result in reduced structural integrity of the aileron and consequent reduced controllability of the airplane. This AD requires a one-time X-ray inspection to detect missing rivets at the rib to spar connection of the aileron ribs, and corrective actions, if necessary. The actions are required to be accomplished in accordance with the alert service bulletin described previously, except as discussed below.

Differences Between AD and Alert Service Bulletin

Operators should note that, although the alert service bulletin specifies that the Customer Support Group at Galaxy Aerospace Company may be contacted for disposition of certain conditions, this amendment would require the repair of those conditions to be accomplished in accordance with a method approved by either the FAA or the CAAI (or its delegated agent). In light of the type of repair that would be required to address the identified unsafe condition, and in consonance with existing bilateral airworthiness agreements, the FAA has determined that, for this AD, a repair approved by either the FAA or the CAAI would be acceptable for compliance with this AD.

Determination of Rule's Effective Date

Since a situation exists that requires the immediate adoption of this regulation, it is found that notice and opportunity for prior public comment hereon are impracticable, and that good cause exists for making this amendment effective in less than 30 days.

Comments Invited

Although this action is in the form of a final rule that involves requirements affecting flight safety and, thus, was not preceded by notice and an opportunity for public comment, comments are invited on this rule. Interested persons are invited to comment on this rule by submitting such written data, views, or arguments as they may desire. Communications shall identify the Rules Docket number and be submitted in triplicate to the address specified under the caption **ADDRESSES.** All communications received on or before the closing date for comments will be considered, and this rule may be amended in light of the comments received. Factual information that supports the commenter's ideas and suggestions is extremely helpful in evaluating the effectiveness of the AD action and determining whether additional rulemaking action would be needed.

Submit comments using the following format:

- Organize comments issue-by-issue. For example, discuss a request to change the compliance time and a request to change the service bulletin reference as two separate issues.
- For each issue, state what specific change to the AD is being requested.
- Include justification (e.g., reasons or data) for each request.

Comments are specifically invited on the overall regulatory, economic, environmental, and energy aspects of the rule that might suggest a need to modify the rule. All comments submitted will be available, both before and after the closing date for comments, in the Rules Docket for examination by interested persons. A report that summarizes each FAA-public contact concerned with the substance of this AD will be filed in the Rules Docket.

Commenters wishing the FAA to acknowledge receipt of their comments submitted in response to this rule must submit a self-addressed, stamped postcard on which the following statement is made: ''Comments to Docket Number 2000–NM–42–AD.'' The postcard will be date stamped and returned to the commenter.

Regulatory Impact

The regulations adopted herein will not have a substantial direct effect on the States, on the relationship between the national Government and the States, or on the distribution of power and responsibilities among the various levels of government. Therefore, it is determined that this final rule does not have federalism implications under Executive Order 13132.

The FAA has determined that this regulation is an emergency regulation that must be issued immediately to correct an unsafe condition in aircraft, and that it is not a ''significant regulatory action'' under Executive Order 12866. It has been determined further that this action involves an emergency regulation under DOT Regulatory Policies and Procedures (44 FR 11034, February 26, 1979). If it is determined that this emergency regulation otherwise would be significant under DOT Regulatory Policies and Procedures, a final regulatory evaluation will be prepared and placed in the Rules Docket. A copy of it, if filed, may be obtained from the Rules Docket at the location provided under the caption **ADDRESSES.**

List of Subjects in 14 CFR Part 39

Air transportation, Aircraft, Aviation safety, Incorporation by reference, Safety.

Adoption of the Amendment

Accordingly, pursuant to the authority delegated to me by the Administrator, the Federal Aviation Administration amends part 39 of the Federal Aviation Regulations (14 CFR part 39) as follows:

PART 39—AIRWORTHINESS DIRECTIVES

1. The authority citation for part 39 continues to read as follows:

Authority: 49 U.S.C. 106(g), 40113, 44701.

§ 39.13 [Amended]

2. Section 39.13 is amended by adding the following new airworthiness directive:

2000–10–04 Israel Aircraft Industries, Ltd.: Amendment 39–11728. Docket 2000–NM–42–AD.

Applicability: Model 1124 and 1124A Westwind airplanes having serial numbers (S/N) 297, 304, and 400 through 410 inclusive; certificated in any category.

Note 1: This AD applies to each airplane identified in the preceding applicability provision, regardless of whether it has been modified, altered, or repaired in the area subject to the requirements of this AD. For airplanes that have been modified, altered, or repaired so that the performance of the requirements of this AD is affected, the owner/operator must request approval for an alternative method of compliance in accordance with paragraph (b) of this AD. The request should include an assessment of the effect of the modification, alteration, or repair on the unsafe condition addressed by this AD; and, if the unsafe condition has not been eliminated, the request should include specific proposed actions to address it.

Compliance: Required as indicated, unless accomplished previously.

To prevent cracking of the aileron skin due to missing rivets, which could result in reduced structural integrity of the aileron and consequent reduced controllability of the airplane, accomplish the following:

X-Ray Inspection

(a) Within 200 flight hours after the effective date of this AD, perform a one-time X-ray inspection to detect missing rivets at the rib-to-spar connection of the aileron ribs, left and right sides, at work stations (WS) 158.00 to WS 246.00, in accordance with Israel 1124 Westwind Alert Service Bulletin No. 1124–27A–145, dated March 24, 2000.

(1) If all rivets are installed, no further action is required by this AD.

(2) If any rivet is missing, prior to further flight, replace the aileron with a new or serviceable aileron, in accordance with Israel Aircraft Industries 1124/1124A Westwind Maintenance Manual, or repair the aileron in accordance with a method approved by

either the Manager, International Branch, ANM–116, FAA, Transport Airplane Directorate; or the Civil Aviation Administration of Israel (CAAI) (or its delegated agent). For a repair method to be approved by the Manager, International Branch, ANM–116, as required by this paragraph, the Manager's approval letter must specifically reference this AD.

Alternative Methods of Compliance

(b) An alternative method of compliance or adjustment of the compliance time that provides an acceptable level of safety may be used if approved by the Manager, International Branch, ANM–116. Operators shall submit their requests through an appropriate FAA Principal Maintenance Inspector, who may add comments and then send it to the Manager, International Branch, ANM–116.

Note 2: Information concerning the existence of approved alternative methods of compliance with this AD, if any, may be obtained from the International Branch, ANM–116.

Special Flight Permits

(c) Special flight permits may be issued in accordance with sections 21.197 and 21.199 of the Federal Aviation Regulations (14 CFR 21.197 and 21.199) to operate the airplane to a location where the requirements of this AD can be accomplished.

Incorporation by Reference

(d) The inspection shall be done in accordance with 1124 Westwind (Israel Aircraft Industries) Alert Service Bulletin No. 1124–27A–145, dated March 24, 2000. This incorporation by reference was approved by the Director of the Federal Register in accordance with 5 U.S.C. 552(a) and 1 CFR part 51. Copies may be obtained from Galaxy Aerospace Corporation, One Galaxy Way, Fort Worth Alliance Airport, Fort Worth, Texas 76177. Copies may be inspected at the FAA, Transport Airplane Directorate, 1601 Lind Avenue, SW., Renton, Washington; or at the Office of the Federal Register, 800 North Capitol Street, NW., suite 700, Washington, DC.

Note 3: The subject of this AD is addressed in Israeli airworthiness directive 57–00–02–06, dated February 24, 2000.

(e) This amendment becomes effective on June 6, 2000.

Issued in Renton, Washington, on May 8, 2000.

Vi L. Lipski,

Acting Manager, Transport Airplane Directorate, Aircraft Certification Service.

[FR Doc. 00–11951 Filed 5–19–00; 8:45 am]

BILLING CODE 4910–13–P

DEPARTMENT OF TRANSPORTATION

Federal Aviation Administration

14 CFR Part 39

[Docket No. 99–SW–36–AD; Amendment 39–11733; AD 2000–10–09]

RIN 2120–AA64

Airworthiness Directives; Eurocopter France Model AS350B, BA, B1, B2, B3, D, and AS355E, F, F1, F2, and N Helicopters

AGENCY: Federal Aviation Administration, DOT.

ACTION: Final rule.

SUMMARY: This amendment adopts a new airworthiness directive (AD) for Eurocopter France Model AS350B, BA, B1, B2, B3, D, and AS355E, F, F1, F2, and N helicopters that requires replacing certain circuit breakers. This amendment is prompted by the discovery of the loss of electrical continuity between the terminals of an installed circuit breaker. The actions specified by this AD are intended to prevent loss of electrical power to the emergency flotation gear or other optional installations and subsequent loss of the helicopter emergency flotation capability.

DATES: Effective June 26, 2000.

The incorporation by reference of certain publications listed in the regulations is approved by the Director of the Federal Register as of June 26, 2000.

ADDRESSES: The service information referenced in this AD may be obtained from American Eurocopter Corporation, 2701 Forum Drive, Grand Prairie, Texas 75053–4005, telephone (972) 641–3460, fax (972) 641–3527. This information may be examined at the FAA, Office of the Regional Counsel, Southwest Region, 2601 Meacham Blvd., Room 663, Fort Worth, Texas; or at the Office of the Federal Register, 800 North Capitol Street, NW., suite 700, Washington, DC.

FOR FURTHER INFORMATION CONTACT: Carroll Wright, Aviation Safety Engineer, FAA, Rotorcraft Directorate, Rotorcraft Standards Staff, 2601 Meacham Blvd., Fort Worth, Texas 76137, telephone (817) 222–5120, fax (817) 222–5961.

SUPPLEMENTARY INFORMATION: A proposal to amend part 39 of the Federal Aviation Regulations (14 CFR part 39) to include an AD for Eurocopter France Model AS350B, BA, B1, B2, B3, D, and AS355E, F, F1, F2, and N helicopters was published in the **Federal Register** on February 23, 2000 (65 FR 8894). That action proposed to require inspecting Crouzet single-pole circuit breakers for proper operation; replacing any Crouzet single-pole circuit breaker that is not operating properly with an airworthy circuit breaker; and replacing all Crouzet single-pole circuit breakers with airworthy circuit breakers on or before July 1, 2000.

Interested persons have been afforded an opportunity to participate in the making of this amendment. No comments were received on the proposal or the FAA's determination of the cost to the public. The FAA has determined that air safety and the public interest require the adoption of the rule as proposed.

The FAA estimates that 150 helicopters of U.S. registry will be affected by this AD, that it will take approximately 0.25 work hour per helicopter to replace the circuit breakers, and that the average labor rate is $60 per work hour. Required parts will cost approximately $23 per helicopter. Based on these figures, the total cost impact of the AD on U.S. operators is estimated to be $5,700, assuming the replacement of 150 circuit breakers.

The regulations adopted herein will not have a substantial direct effect on the States, on the relationship between the national Government and the States, or on the distribution of power and responsibilities among the various levels of government. Therefore, it is determined that this final rule does not have federalism implications under Executive Order 13132.

For the reasons discussed above, I certify that this action (1) is not a ''significant regulatory action'' under Executive Order 12866; (2) is not a ''significant rule'' under DOT Regulatory Policies and Procedures (44 FR 11034, February 26, 1979); and (3) will not have a significant economic impact, positive or negative, on a substantial number of small entities under the criteria of the Regulatory Flexibility Act. A final evaluation has been prepared for this action and it is contained in the Rules Docket. A copy of it may be obtained from the Rules Docket at the location provided under the caption **ADDRESSES**.

List of Subjects in 14 CFR Part 39

Air transportation, Aircraft, Aviation safety, Incorporation by reference, Safety.

Adoption of the Amendment

Accordingly, pursuant to the authority delegated to me by the Administrator, the Federal Aviation

Administration amends part 39 of the Federal Aviation Regulations (14 CFR part 39) as follows:

PART 39—AIRWORTHINESS DIRECTIVES

1. The authority citation for part 39 continues to read as follows:

Authority: 49 U.S.C. 106(g), 40113, 44701.

§ 39.13 [Amended]

2. Section 39.13 is amended by adding a new airworthiness directive to read as follows:

AD 2000–10–09 Eurocopter France: Amendment 39–11733. Docket No. 99–SW–36–AD.

Applicability: Model AS350B, BA, B1, B2, B3, D, and AS355E, F, F1, F2, and N helicopters, with Crouzet single-pole circuit breaker, part numbers (P/N) 84 400 028, and P/N 84 400 031 through P/N 84 400 036, installed as part of any optional installations, certificated in any category.

Note 1: This AD applies to each helicopter identified in the preceding applicability provision, regardless of whether it has been otherwise modified, altered, or repaired in the area subject to the requirements of this AD. For helicopters that have been modified, altered, or repaired so that the performance of the requirements of this AD is affected, the owner/operator must request approval for an alternative method of compliance in accordance with paragraph (c) of this AD. The request should include an assessment of the effect of the modification, alteration, or repair on the unsafe condition addressed by this AD; and if the unsafe condition has not been eliminated, the request should include specific proposed actions to address it.

Compliance: Required as indicated, unless accomplished previously.

To prevent loss of electrical power to the emergency flotation gear or other optional installations and subsequent loss of the helicopter emergency flotation capability, accomplish the following:

(a) On or before 200 hours time-in-service or within the next 3 calendar months, whichever occurs first:

(1) For Model AS350B, BA, B1, B2, B3, and D helicopters, inspect and if inoperable, replace the Crouzet single-pole circuit breakers installed in the flotation gear unit assembly and other optional installations for electrical continuity in accordance with section 2.B. of the Accomplishment Instructions contained in Eurocopter France Service Bulletin (SB) No. 01.00.47, dated November 10, 1998, except disregard the compliance times stated in paragraph 2.B.2) of the SB.

(2) For Model AS355E, F, F1, F2, and N helicopters, inspect and if inoperable, replace the Crouzet single-pole circuit breakers installed in the flotation gear unit assembly and other optional installations for electrical continuity in accordance with section 2.B. of the Accomplishment Instructions contained in SB No. 01.00.44, dated November 10, 1998, except disregard the compliance times stated in paragraph 2.B.2) of the SB.

(b) On or before July 1, 2000, replace all Crouzet single-pole circuit breakers in accordance with section 2.B. of the Accomplishment Instructions of the applicable SB.

(c) An alternative method of compliance or adjustment of the compliance time that provides an acceptable level of safety may be used if approved by the Manager, Regulations Group, Rotorcraft Directorate, FAA. Operators shall submit their requests through an FAA Principal Maintenance Inspector, who may concur or comment and then send it to the Manager, Regulations Group.

Note 2: Information concerning the existence of approved alternative methods of compliance with this AD, if any, may be obtained from the Regulations Group.

(d) Special flight permits may be issued in accordance with sections 21.197 and 21.199 of the Federal Aviation Regulations (14 CFR 21.197 and 21.199) to operate the helicopter to a location where the requirements of this AD can be accomplished.

(e) The inspection and modification shall be done in accordance with section 2.B. of the Accomplishment Instructions contained in Eurocopter France Service Bulletin No. 01.00.44 or No. 01.00.47, both dated November 10, 1998. This incorporation by reference was approved by the Director of the Federal Register in accordance with 5 U.S.C. 552(a) and 1 CFR part 51. Copies may be obtained from American Eurocopter Corporation, 2701 Forum Drive, Grand Prairie, Texas 75053–4005, telephone (972) 641–3460, fax (972) 641–3527. Copies may be inspected at the FAA, Office of the Regional Counsel, Southwest Region, 2601 Meacham Blvd., Room 663, Fort Worth, Texas; or at the Office of the Federal Register, 800 North Capitol Street, NW., suite 700, Washington, DC.

(f) This amendment becomes effective on June 26, 2000.

Note 3: The subject of this AD is addressed in Direction Generale De L'Aviation Civile (France) AD 98–510–055(A) for the Model AS 355 helicopters and AD 98–511–074(A) for the Model AS 350 helicopters. Both DGAC AD's are dated December 16, 1998.

Issued in Fort Worth, Texas, on May 9, 2000.

Henry A. Armstrong,

Manager, Rotorcraft Directorate, Aircraft Certification Service.

[FR Doc. 00–12352 Filed 5–19–00; 8:45 am]

BILLING CODE 4910–13–P

DEPARTMENT OF TRANSPORTATION

Federal Aviation Administration

14 CFR Part 39

[Docket No. 99–SW–39–AD; Amendment 39–11734; AD 2000–10–10]

RIN 2120–AA64

Airworthiness Directives; Eurocopter France Model AS–350B, BA, B1, B2, and D, and Model AS–355E, F, F1, F2, and N Helicopters

AGENCY: Federal Aviation Administration, DOT.

ACTION: Final rule.

SUMMARY: This amendment supersedes an existing airworthiness directive (AD) that applies to Eurocopter France Model AS–350B, BA, B1, B2, and D, and Model AS–355E, F, F1, F2, and N helicopters and requires inspecting the main gearbox suspension bi-directional cross-beam (cross-beam) for cracks, and replacing the cross-beam if a crack is found. This amendment requires the same inspections as the existing AD, but adds the time intervals for performing repetitive dye-penetrant inspections on cross-beams with 5,000 or more hours time-in-service (TIS). This amendment is prompted by the discovery that time intervals for performing the required dye-penetrant inspections are not included in the existing AD. The actions specified by this AD are intended to prevent failure of the cross-beam that could lead to rotation of the main gearbox, resulting in severe vibrations and a subsequent forced landing.

DATES: Effective June 26, 2000.

The incorporation by reference of certain publications listed in the regulations was previously approved by the Director of the Federal Register as of August 3, 1998 (63 FR 35128, June 29, 1998).

ADDRESSES: The service information referenced in this AD may be obtained from American Eurocopter Corporation, 2701 Forum Drive, Grand Prairie, Texas 75053–4005, telephone (972) 641–3460, fax (972) 641–3527. This information may be examined at the FAA, Office of the Regional Counsel, Southwest Region, 2601 Meacham Blvd., Room 663, Fort Worth, Texas; or at the Office

of the Federal Register, 800 North Capitol Street, NW., suite 700, Washington, DC.

FOR FURTHER INFORMATION CONTACT: Jim Grigg, Aviation Safety Engineer, FAA, Rotorcraft Directorate, ASW–111, 2601 Meacham Blvd., Fort Worth, Texas 76137, telephone (817) 222–5490, fax (817) 222–5961.

SUPPLEMENTARY INFORMATION: A proposal to amend part 39 of the Federal Aviation Regulations (14 CFR part 39) by superseding AD 98–14–01, Amendment 39–10635 (63 FR 35128, June 29, 1998), which applies to Eurocopter France Model AS–350B, BA, B1, B2, and D, and Model AS–355E, F, F1, F2, and N helicopters, was published in the **Federal Register** on February 11, 2000 (65 FR 6927). That action proposed to require, at specified time intervals or cycles, repetitive visual and dye-penetrant inspections of the cross-beam for cracks and replacing, if necessary, the cross-beam with an airworthy cross-beam.

Interested persons have been afforded an opportunity to participate in the making of this amendment. No comments were received on the proposal or the FAA's determination of the cost to the public. The FAA has determined that air safety and the public interest require the adoption of the rule as proposed.

The FAA estimates that 454 helicopters of U.S. registry will be affected by this AD. It will take approximately 0.5 work hour per helicopter to accomplish each visual inspection, with an estimated average of 150 visual inspections per helicopter; 3 work hours per helicopter to accomplish a dye-penetrant inspection, with an estimated average of 3 dye-penetrant inspections per helicopter; and 6 work hours per helicopter to replace the cross-beam, if necessary. The average labor rate is $60 per work hour. Parts will cost approximately $6,000 per cross-beam. Based on these figures, the total cost impact of the AD on U.S. operators is estimated to be $5,175,600 to perform 150 visual inspections and an average of 3 dye-penetrant inspections per helicopter and to replace the cross-beam on all 454 helicopters.

The regulations adopted herein will not have a substantial direct effect on the States, on the relationship between the national Government and the States, or on the distribution of power and responsibilities among the various levels of government. Therefore, it is determined that this final rule does not have federalism implications under Executive Order 13132.

For the reasons discussed above, I certify that this action (1) is not a ''significant regulatory action'' under Executive Order 12866; (2) is not a ''significant rule'' under DOT Regulatory Policies and Procedures (44 FR 11034, February 26, 1979); and (3) will not have a significant economic impact, positive or negative, on a substantial number of small entities under the criteria of the Regulatory Flexibility Act. A final evaluation has been prepared for this action and it is contained in the Rules Docket. A copy of it may be obtained from the Rules Docket at the location provided under the caption **ADDRESSES.**

List of Subjects in 14 CFR Part 39

Air transportation, Aircraft, Aviation safety, Incorporation by reference, Safety.

Adoption of the Amendment

Accordingly, pursuant to the authority delegated to me by the Administrator, the Federal Aviation Administration amends part 39 of the Federal Aviation Regulations (14 CFR part 39) as follows:

PART 39—AIRWORTHINESS DIRECTIVES

1. The authority citation for part 39 continues to read as follows:

Authority: 49 U.S.C. 106(g), 40113, 44701.

§ 39.13 [Amended]

2. Section 39.13 is amended by removing Amendment 39–10635 (63 FR 35128), and by adding a new airworthiness directive (AD), Amendment 39–11734, to read as follows:

AD 2000–10–10 Eurocopter France: Amendment 39–11734. Docket No. 99–SW–39–AD. Supersedes AD 98–14–01, Amendment 39–10635, Docket No. 97–SW–25–AD.

Applicability: Model AS–350B, BA, B1, B2, and D, and Model AS–355E, F, F1, F2, and N helicopters, with main gearbox suspension bi-directional cross-beam (cross-beam), part number (P/N) 350A38–1018—all dash numbers, installed, certificated in any category.

Note 1: This AD applies to each helicopter identified in the preceding applicability provision, regardless of whether it has been otherwise modified, altered, or repaired in the area subject to the requirements of this AD. For helicopters that have been modified, altered, or repaired so that the performance of the requirements of this AD is affected, the owner/operator must request approval for an alternative method of compliance in accordance with paragraph (e) of this AD. The request should include an assessment of the effect of the modification, alteration, or repair on the unsafe condition addressed by this AD; and, if the unsafe condition has not been eliminated, the request should include specific proposed actions to address it.

Compliance: Required as indicated, unless accomplished previously.

To prevent failure of the cross-beam that could lead to rotation of the main gearbox, resulting in severe vibrations and a subsequent forced landing, accomplish the following:

(a) For cross-beams having 2,000 or more hours time-in-service (TIS) or 10,000 or more operating cycles, whichever occurs first:

Note 2: The Master Service Recommendations and the flight log contain accepted procedures that are used to determine the cumulative operating cycles on the rotorcraft.

(1) Within 30 hours TIS, and thereafter at intervals not to exceed 30 hours TIS or 150 operating cycles, whichever occurs first, visually inspect the cross-beam for cracks in accordance with paragraph 2.B.1) of Eurocopter France Service Bulletin No. 05.00.28, applicable to Model AS–350 helicopters, or Eurocopter France Service Bulletin No. 05.00.29, applicable to Model AS–355 helicopters, both dated May 26, 1997.

(2) If a crack is found, remove the cross-beam and replace it with an airworthy cross-beam.

(b) For cross-beams having 5,000 or more hours TIS:

(1) In addition to continuing the repetitive inspections of paragraph (a)(1), before further flight, and thereafter at intervals not to exceed 550 hours TIS or 2,750 operating cycles, whichever occurs first, perform a dye-penetrant inspection in accordance with paragraph 2.B.2) of Eurocopter France Service Bulletin No. 05.00.28, applicable to Model AS–350 helicopters, or Eurocopter Service Bulletin No. 05.00.29, applicable to Model AS–355 helicopters, both dated May 26, 1996.

(2) If a crack is found, remove the cross-beam and replace it with an airworthy cross-beam.

(c) Prior to installing any replacement cross-beams, regardless of TIS or operating cycles, inspect the replacement cross-beam in accordance with paragraph (b)(1) of this AD.

(d) Modifying the helicopter in accordance with paragraph 2.B of the Accomplishment Instructions in Eurocopter Service Bulletin No. 63.00.07, applicable to Model AS–350B, BA, B1, B2, and D helicopters, or Eurocopter Service Bulletin No. 63.00.13, applicable to Model AS–355E, F, F1, F2, and N helicopters, both dated April 7, 1997, constitutes terminating action for the requirements of this AD.

(e) An alternative method of compliance or adjustment of the compliance time that provides an acceptable level of safety may be used if approved by the Manager, Regulations Group, Rotorcraft Directorate, FAA. Operators shall submit their requests through an FAA Principal Maintenance Inspector, who may concur or comment and then send it to the Manager, Regulations Group.

Note 3: Information concerning the existence of approved alternative methods of compliance with this AD, if any, may be obtained from the Regulations Group.

(f) Special flight permits may be issued in accordance with sections 21.197 and 21.199 of the Federal Aviation Regulations (14 CFR 21.197 and 21.199) to operate the helicopter to a location where the requirements of this AD can be accomplished.

(g) The inspections and replacements, if necessary, shall be done in accordance with Eurocopter France Service Bulletin No. 05.00.28, applicable to Model AS–350 helicopters, and Eurocopter France Service Bulletin No. 05.00.29, applicable to Model AS–355 helicopters, both dated May 26, 1997. The incorporation by reference of those documents was previously approved by the Director of the Federal Register in accordance with 5 U.S.C. 552(a) and 1 CFR part 51 as of August 3, 1998 (63 FR 35128, June 29, 1998). Copies may be obtained from American Eurocopter Corporation, 2701 Forum Drive, Grand Prairie, Texas 75053–4005, telephone (972) 641–3460, fax (972) 641–3527. Copies may be inspected at the FAA, Office of the Regional Counsel, Southwest Region, 2601 Meacham Blvd., Room 663, Fort Worth, Texas; or at the Office of the Federal Register, 800 North Capitol Street, NW., suite 700, Washington, DC.

(h) This amendment becomes effective on June 26, 2000.

Note 4: The subject of this AD is addressed in Direction Generale De L'Aviation Civile (France) AD 96–156–071(B)R1 and AD 96–155–053(B)R1, both dated June 4, 1997.

Issued in Fort Worth, Texas, on May 11, 2000.

Eric Bries,

Acting Manager, Rotorcraft Directorate, Aircraft Certification Service.

[FR Doc. 00–12575 Filed 5–19–00; 8:45 am]

BILLING CODE 4910–13–U

DEPARTMENT OF TRANSPORTATION

Federal Aviation Administration

14 CFR Part 39

[Docket No. 99–SW–86–AD; Amendment 39–11737; AD 2000–10–13]

RIN 2120–AA64

Airworthiness Directives; Eurocopter France Model SA–365N, SA–365N1, AS–365N2 and AS–365N3 Helicopters

AGENCY: Federal Aviation Administration, DOT.

ACTION: Final rule; request for comments.

SUMMARY: This amendment adopts a new airworthiness directive (AD) applicable to Eurocopter France Model SA–365N, SA–365N1, AS–365N2 and AS–365N3 helicopters. This action requires inspecting the installation of each window panel on the enlarged sliding door (door). If any window panel is installed on the outside of the door, this AD requires installing and sealing the window panel on the inside. This amendment is prompted by the loss of a window panel in flight that was incorrectly sealed with the window installed on the outside of the door. This condition, if not corrected, could result in loss of a window panel in flight. The actions specified in this AD are intended to prevent loss of a window panel, impact with a main rotor blade, and subsequent loss of control of the helicopter.

DATES: Effective June 6. 2000.

Comments for inclusion in the Rules Docket must be received on or before July 21, 2000.

ADDRESSES: Submit comments in triplicate to the Federal Aviation Administration (FAA), Office of the Regional Counsel, Southwest Region, Attention: Rules Docket No. 99–SW–86–AD, 2601 Meacham Blvd., Room 663, Fort Worth, Texas 76137. You may also send comments electronically to the Rules Docket at the following address: 9-asw-adcomments@faa.gov.

FOR FURTHER INFORMATION CONTACT: Jim Grigg, Aviation Safety Engineer, FAA, Rotorcraft Directorate, Regulations Group, Fort Worth, Texas 76193–0111, telephone (817) 222–5490, fax (817) 222–5961.

SUPPLEMENTARY INFORMATION: The Direction Generale De L'Aviation Civile (DGAC), the airworthiness authority for France, notified the FAA that an unsafe condition may exist on Eurocopter France Model SA–365N, SA–365N1, AS–365N2 and AS–365N3 helicopters. The DGAC advises of the need to visually inspect each window for correct mounting to prevent loss of a window in flight, impact with a main rotor blade, and subsequent loss of control of the helicopter.

Eurocopter France has issued Telex Information No. 00097, dated November 9, 1999 (Telex). The Telex advises of the loss of a window panel in flight due to the window panel being sealed and positioned on the outside of the door. The Telex specifies visually inspecting the installation of each window panel and resuming flight if the window panels are inside the door. If the window panels are outside the door, the Telex specifies repositioning and resealing the window panels inside the door. The DGAC classified this Telex as mandatory and issued AD 1999–459–049(A), dated December 1, 1999, to ensure the continued airworthiness of these helicopters in France.

These helicopter models are manufactured in France and are type certificated for operation in the United States under the provisions of section 21.29 of the Federal Aviation Regulations (14 CFR 21.29) and the applicable bilateral airworthiness agreement. Pursuant to this bilateral airworthiness agreement, the DGAC has kept the FAA informed of the situation described above. The FAA has examined the findings of the DGAC, reviewed all available information, and determined that AD action is necessary for products of these type designs that are certificated for operation in the United States.

Since an unsafe condition has been identified that is likely to exist or develop on other Eurocopter France Model SA–365N, SA–365N1, AS–365N2 and AS–365N3 helicopters of the same type designs registered in the United States, this AD is being issued to prevent loss of a window panel, impact with a main rotor blade, and subsequent loss of control of the helicopter. This AD requires visually inspecting each window panel for correct installation on the door. If the window panel is installed properly, no further action is required by this AD. If any window panel is installed outside the door, this AD also requires, before further flight, removing, installing inside the door, and resealing the window panel. The short compliance time involved is required because the previously described critical unsafe condition can adversely affect the structural integrity of the helicopter. Therefore, visually inspecting each window panel for correct installation on the door is required within 10 hours time-in-service and this AD must be issued immediately.

Since a situation exists that requires the immediate adoption of this regulation, it is found that notice and opportunity for prior public comment hereon are impracticable and that good cause exists for making this amendment effective in less than 30 days.

The FAA estimates that 60 helicopters will be affected by this AD, that it will take approximately 0.25 work hour to accomplish the inspection and that the average labor rate is $60 per work hour. Based on these figures and assuming 10 windows are affected at $10 each for the seal and 1 hour to reinstall each window, the total cost impact of the AD on U.S. operators is estimated to be $1,600.

Comments Invited

Although this action is in the form of a final rule that involves requirements affecting flight safety and, thus, was not preceded by notice and an opportunity for public comment, comments are invited on this rule. Interested persons are invited to comment on this rule by submitting such written data, views, or arguments as they may desire. Communications should identify the Rules Docket number and be submitted in triplicate to the address specified under the caption **ADDRESSES**. All communications received on or before the closing date for comments will be considered, and this rule may be amended in light of the comments received. Factual information that supports the commenter's ideas and suggestions is extremely helpful in evaluating the effectiveness of the AD action and determining whether additional rulemaking action would be needed.

Comments are specifically invited on the overall regulatory, economic, environmental, and energy aspects of the rule that might suggest a need to modify the rule. All comments submitted will be available, both before and after the closing date for comments, in the Rules Docket for examination by interested persons. A report that summarizes each FAA-public contact concerned with the substance of this AD will be filed in the Rules Docket.

Commenters wishing the FAA to acknowledge receipt of their mailed comments submitted in response to this rule must submit a self-addressed, stamped postcard on which the following statement is made: ''Comments to Docket No. 99–SW–86–AD.'' The postcard will be date stamped and returned to the commenter.

The regulations adopted herein will not have a substantial direct effect on the States, on the relationship between the national Government and the States, or on the distribution of power and responsibilities among the various levels of government. Therefore, it is determined that this final rule does not have federalism implications under Executive Order 13132.

The FAA has determined that this regulation is an emergency regulation that must be issued immediately to correct an unsafe condition in aircraft, and that it is not a ''significant regulatory action'' under Executive Order 12866. It has been determined further that this action involves an emergency regulation under DOT Regulatory Policies and Procedures (44 FR 11034, February 26, 1979). If it is determined that this emergency regulation otherwise would be significant under DOT Regulatory Policies and Procedures, a final regulatory evaluation will be prepared and placed in the Rules Docket. A copy of it, if filed, may be obtained from the Rules Docket at the location provided under the caption **ADDRESSES**.

List of Subjects in 14 CFR Part 39

Air transportation, Aircraft, Aviation safety, Safety.

Adoption of the Amendment

Accordingly, pursuant to the authority delegated to me by the Administrator, the Federal Aviation Administration amends part 39 of the Federal Aviation Regulations (14 CFR part 39) as follows:

PART 39—AIRWORTHINESS DIRECTIVES

1. The authority citation for part 39 continues to read as follows:

Authority: 49 U.S.C. 106(g), 40113, 44701.

§ 39.13 [Amended]

2. Section 39.13 is amended by adding a new airworthiness directive to read as follows:

AD 2000–10–13 Eurocopter France: Amendment 39–11737. Docket No. 99–SW–86–AD.

Applicability: Model SA–365N, SA–365N1, AS–365N2, and AS–365N3 helicopters, with enlarged sliding doors, part number (P/N) 365A82–1142–0051, 0054, 0153, or 0154, installed, certificated in any category.

Note 1: This AD applies to each helicopter identified in the preceding applicability provision, regardless of whether it has been otherwise modified, altered, or repaired in the area subject to the requirements of this AD. For helicopters that have been modified, altered, or repaired so that the performance of the requirements of this AD is affected, the owner/operator must request approval for an alternative method of compliance in accordance with paragraph (b) of this AD. The request should include an assessment of the effect of the modification, alteration, or repair on the unsafe condition addressed by this AD; and if the unsafe condition has not been eliminated, the request should include specific proposed actions to address it.

Compliance: Required within 10 hours time-in-service (TIS), unless accomplished previously.

To prevent loss of a window panel, impact with a main rotor blade, and subsequent loss of control of the helicopter, accomplish the following:

(a) Visually inspect each window panel in any enlarged sliding door (door) for correct positioning on the inside of the door. See Figure 1.

(1) If the window panel is installed on the inside of the door, no further action is required by this AD.

(2) If a window is installed on the outside, before further flight, remove the window and reinstall using a new seal.

Note 2: The following optional procedure may be used to remove and reinstall a window, however, any procedure that results in the installation of a properly sealed airworthy window panel on the inside of the door is acceptable:

a. From inside the door, cut the seal (see Figure 1, item 3). Push the window out and remove remnants of the seal from the window panel and door structure.

b. Remove all traces of the sealing compound (see Figure 1, item 4) with methyl ethyl ketone (MEK), acetone, or equivalent.

c. Thoroughly dust the grooves of a new seal with talcum powder.

d. Fit the new seal to the window panel. The joint will be located in the lower center of the window panel. The clearance between the seal and the window panel should not exceed 0.04 inch.

e. Insert a 0.01-inch diameter cord (ripcord works well) into the seal slot. Position the cord such that the cord ends are on the top center of the panel).

f. Press the window panel and seal assembly against the door from the inside.

g. Gently pull outward on the cord ends, allowing the outer edge of the seal to pull over the door structure. Continue pulling cord around the window panel until complete.

h. Apply PR1222 sealant between the seal and the door structure. Wipe off any excess sealant.

Note 3: Eurocopter Telex No. 00097, dated November 9, 1999, pertains to this AD.

BILLING CODE 4910–13–U

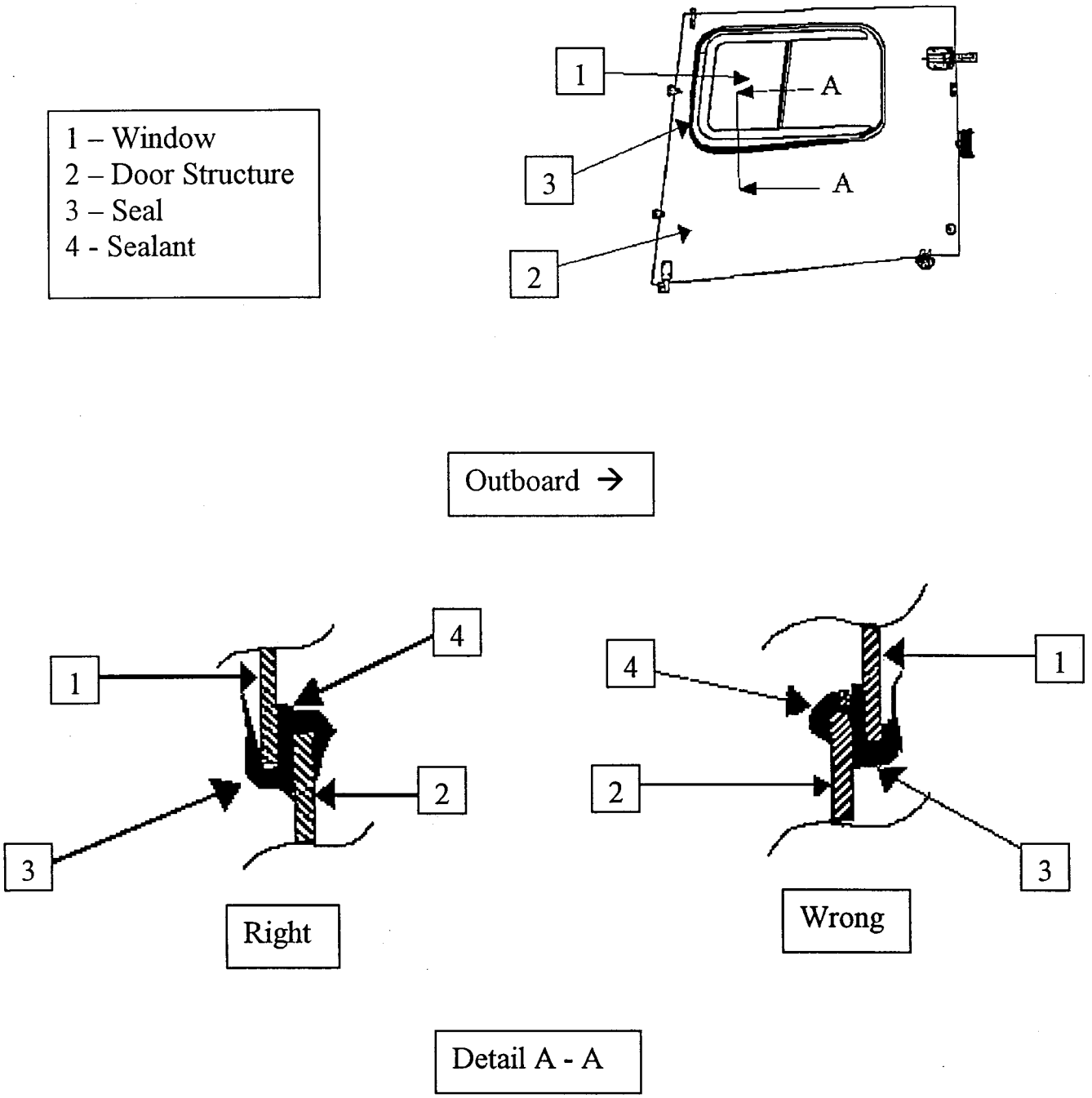

Figure 1

BILLING CODE 4910–13–C

(b) An alternative method of compliance or adjustment of the compliance time that provides an acceptable level of safety may be used if approved by the Manager, Regulations Group, Rotorcraft Directorate, FAA. Operators shall submit their requests through an FAA Principal Maintenance Inspector, who may concur or comment and then send it to the Manager, Regulations Group.

Note 4: Information concerning the existence of approved alternative methods of compliance with this AD, if any, may be obtained from the Regulations Group.

(c) Special flight permits may be issued in accordance with sections 21.197 and 21.199 of the Federal Aviation Regulations (14 CFR 21.197 and 21.199) to operate the helicopter to a location where the requirements of this AD can be accomplished.

(d) This amendment becomes effective on June 6, 2000.

Note 5: The subject of this AD is addressed in The Direction Generale De L'Aviation Civile (France) AD 1999–459–049(A), dated December 1, 1999.

Issued in Fort Worth, Texas, on May 15, 2000.

Henry A. Armstrong,

Manager, Rotorcraft Directorate, Aircraft Certification Service.

[FR Doc. 00–12817 Filed 5–19–00; 8:45 am]

BILLING CODE 4910–13–U

DEPARTMENT OF TRANSPORTATION

Federal Aviation Administration

14 CFR Part 39

[Docket No. 99–SW–43–AD; Amendment 39–11738; AD 2000–10–14]

RIN 2120–AA64

Airworthiness Directives; Bell Helicopter Textron Canada (BHTC) Model 222, 222B, 222U, and 230 Helicopters

AGENCY: Federal Aviation Administration, DOT.

ACTION: Final rule.

SUMMARY: This amendment adopts a new airworthiness directive (AD) for BHTC Model 222, 222B, 222U, and 230 helicopters that requires inspecting each flapping bearing to yoke attachment bolt (bolt) and replacing each bolt that shows thread damage, shank wear, or corrosion pitting with an airworthy bolt. This amendment is prompted by the discovery of a fractured bolt during a post-flight inspection. The actions specified by this AD are intended to prevent a fracture of a bolt, failure of the bearing and yoke interface, and subsequent loss of control of the helicopter.

EFFECTIVE DATE: June 26, 2000.

FOR FURTHER INFORMATION CONTACT: Sharon Miles, Aviation Safety Engineer, FAA, Rotorcraft Directorate, Rotorcraft Standards Staff, Fort Worth, Texas 76193–0111, telephone (817) 222–5122, fax (817) 222–5961.

SUPPLEMENTARY INFORMATION: A proposal to amend part 39 of the Federal Aviation Regulations (14 CFR part 39) to include an AD for BHTC Model 222, 222B, 222U, and 230 helicopters was published in the **Federal Register** on March 1, 2000 (65 FR 11006). That action proposed to require inspecting the bolts and replacing each bolt that shows thread damage, shank wear, or corrosion with an airworthy bolt.

Interested persons have been afforded an opportunity to participate in the making of this amendment. No comments were received on the proposal or the FAA's determination of the cost to the public. The FAA has determined that air safety and the public interest require the adoption of the rule as proposed.

The FAA estimates that 101 helicopters of U.S. registry will be affected by this AD, that it will take approximately 3 work hours per helicopter to accomplish the required actions, and that the average labor rate is $60 per work hour. Required parts will cost approximately $20 per bolt. Based on these figures, the total cost impact of the AD on U.S. operators is estimated to be $20,200.

The regulations adopted herein will not have a substantial direct effect on the States, on the relationship between the national Government and the States, or on the distribution of power and responsibilities among the various levels of government. Therefore, it is determined that this final rule does not have federalism implications under Executive Order 13132.

For the reasons discussed above, I certify that this action (1) Is not a ''significant regulatory action'' under Executive Order 12866; (2) is not a ''significant rule'' under DOT Regulatory Policies and Procedures (44 FR 11034, February 26, 1979); and (3) will not have a significant economic impact, positive or negative, on a substantial number of small entities under the criteria of the Regulatory Flexibility Act. A final evaluation has been prepared for this action and it is contained in the Rules Docket. A copy of it may be obtained from the Rules Docket at the FAA, Office of the Regional Counsel, Southwest Region, 2601 Meacham Blvd., Room 663, Fort Worth, Texas.

List of Subjects in 14 CFR Part 39

Air transportation, Aircraft, Aviation safety, Safety.

Adoption of the Amendment

Accordingly, pursuant to the authority delegated to me by the Administrator, the Federal Aviation Administration amends part 39 of the Federal Aviation Regulations (14 CFR part 39) as follows:

PART 39—AIRWORTHINESS DIRECTIVES

1. The authority citation for part 39 continues to read as follows:

Authority: 49 U.S.C. 106(g), 40113, 44701.

§ 39.13 [Amended]

2. Section 39.13 is amended by adding a new airworthiness directive to read as follows:

AD 2000–10–14 Bell Helicopter Textron Canada: Amendment 39–11738. Docket No. 99–SW–43–AD.

Applicability: Model 222 helicopters, serial number (S/N) 47006 through 47089; Model 222B helicopters, S/N 47131 through 47156; Model 222U helicopters, S/N 47501 through 47574; and Model 230 helicopters, S/N 23001 through 23038 inclusive, certificated in any category.

Note 1: This AD applies to each helicopter identified in the preceding applicability provision, regardless of whether it has been otherwise modified, altered, or repaired in the area subject to the requirements of this AD. For helicopters that have been modified, altered, or repaired so that the performance of the requirements of this AD is affected, the owner/operator must request approval for an alternative method of compliance in accordance with paragraph (b) of this AD. The request should include an assessment of the effect of the modification, alteration, or repair on the unsafe condition addressed by this AD; and if the unsafe condition has not been eliminated, the request should include specific proposed actions to address it.

Compliance: Required within 150 hours time-in-service, unless accomplished previously.

To prevent the fracture of a flapping bearing to yoke attachment bolt (bolt), failure of the bearing and yoke interface, and subsequent loss of control of the helicopter, accomplish the following:

(a) Remove one bolt at a time and inspect each bolt located as shown in Figure 1.

Note 2: For main rotor hubs installed on rotorcraft, the bolts may be removed, inspected, and installed one at a time.

Note 3: Bell Helicopter Textron Canada Alert Service Bulletins 230–98–15, 222–98–83, and 222U–98–54, all dated October 12, 1998, pertain to the subject of this AD.

(i) Clean each bolt with a cloth dampened with methyl ethyl ketone, RHO SOLV756, Desoto 110, or equivalent.

(ii) Visually inspect each bolt and discard those that have thread damage, shank wear, or corrosion.

(iii) Apply corrosion preventative compound MIL–C–16173 GR2, or equivalent, to the shank of the bolt only.

(iv) Install, torque, and lockwire each bolt.

(v) Coat each bolt head and nut with corrosion preventative compound MIL–C–16173 GR1 or equivalent.

BILLING CODE 4910–13–U

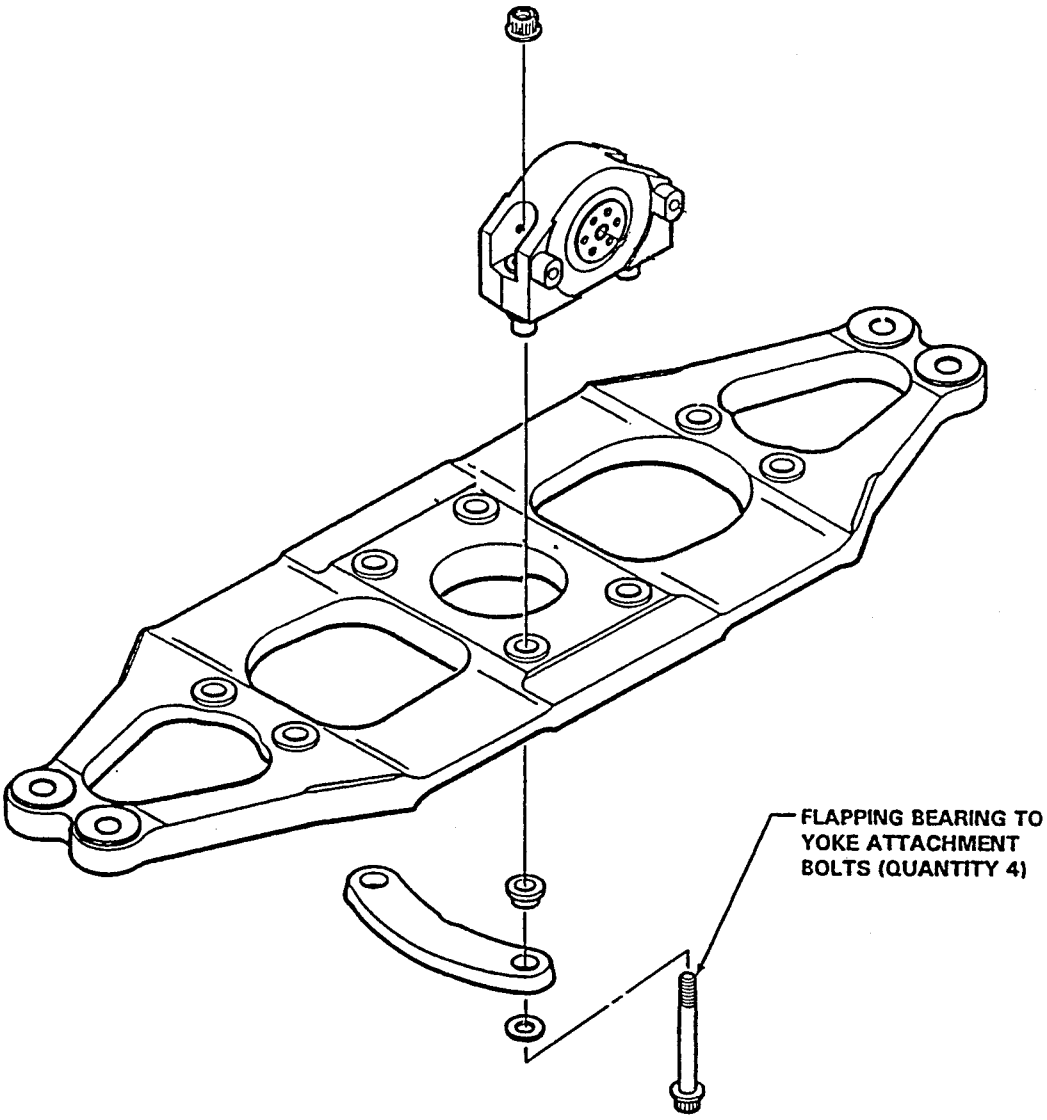

MAIN ROTOR HUB

FIGURE 1

BILLING CODE 4910–13C

(b) An alternative method of compliance or adjustment of the compliance time that provides an acceptable level of safety may be used if approved by the Manager, Regulations Group, Rotorcraft Directorate, FAA. Operators shall submit their requests through an FAA Principal Maintenance Inspector, who may concur or comment and then send it to the Manager, Regulations Group.

Note 4: Information concerning the existence of approved alternative methods of compliance with this AD, if any, may be obtained from the Regulations Group.

(c) Special flight permits may be issued in accordance with sections 21.197 and 21.199 of the Federal Aviation Regulations (14 CFR 21.197 and 21.199) to operate the helicopter to a location where the requirements of this AD can be accomplished.

(d) This amendment becomes effective on June 26, 2000.

Note 5: The subject of this AD is addressed in Transport Canada (Canada) AD's CF–99–12 and CF–99–13, both dated April 21, 1999.

Issued in Fort Worth, Texas, on May 15, 2000.

Henry A. Armstrong,

Manager, Rotorcraft Directorate, Aircraft Certification Service.

[FR Doc. 00–12818 Filed 5–19–00; 8:45 am]

BILLING CODE 4910–13–U

DEPARTMENT OF TRANSPORTATION

Federal Aviation Administration

14 CFR Part 71

[Airspace Docket No. 99–ANM–11]

Establishment of Class D Airspace; Jackson, WY

AGENCY: Federal Aviation Administration (FAA), DOT.

ACTION: Final rule; establishment of effective date.

SUMMARY: This action establishes the effective date for the establishment of a Class D surface area at Jackson Hole Airport, Jackson, WY. The contractual agreements to run the Airport Traffic Control Tower (ATCT) under the FAA contract tower program have now been implemented. Operations at the ATCT will commence on May 15, 2000.

EFFECTIVE DATE: The effective date of FR Doc. 00–3382 is May 15, 2000.

FOR FURTHER INFORMATION CONTACT: Brian Durham, ANM–520.7, Federal Aviation Administration, Docket No. 99–ANM–11, 1601 Lind Avenue S.W., Renton, Washington, 98055–4056; telephone number: (425) 227–2527.

SUPPLEMENTARY INFORMATION:

History

Airspace Docket No. 99–ANM–11, published in the **Federal Register** on February 14, 2000 (65 FR 7287), established a Class D surface airspace area at Jackson Hole Airport, Jackson, WY. This action was originally scheduled to become effective on April 20, 2000. A delay was encountered concerning the contractual requirements for the operation of the ATCT. The length of the delay was uncertain so a delay of effective date action was effected. Contractual requirements for the ATCT have been resolved, the new effective date for operations at Jackson Hole, WY is May 15, 2000.

The FAA has determined that this regulation only involves an established body of technical regulations for which frequent and routine amendments are necessary to keep them operationally current. Therefore, this regulation: (1) Is not a significant regulatory action under Executive Order 12866; (2) is not a ''significant rule'' under DOT regulatory Policies and Procedures (44 FR 11034; February 26, 1979); and (3) does not warrant preparation of a Regulatory Evaluation as the anticipated impact is so minimal. Since this is a routine matter that will only affect air traffic procedures and air navigation, it is certified that this rule will not have a significant economic impact on a substantial number of small entities under the criteria of the Regulatory Flexibility Act.

List of Subjects in 14 CFR Part 71

Airspace, Incorporation by reference, Navigation (air).

Establishment of Effective Date

The effective date on Airspace Docket 99–ANM–11 is hereby established as May 15, 2000.

Authority: 49 U.S.C. 106(g), 40103, 40113, 40120; E.O. 10854, 24 FR 9565, 3 CFR, 1959–1963 Comp., p. 389.

Issued in Seattle, Washington, on May 4, 2000.

Charles E. Davis,

Acting Manager, Air Traffic Division, Northwest Mountain Region.

[FR Doc. 00–12823 Filed 5–19–00; 8:45 am]

BILLING CODE 4910–13–M

DEPARTMENT OF TRANSPORTATION

Coast Guard

33 CFR Parts 110 and 165

[CGD05–00–002]

RIN 2115–AA97, AA98

OPSAIL 2000, Delaware River, Philadelphia, PA

AGENCY: Coast Guard, DOT.

ACTION: Temporary final rule.

SUMMARY: The Coast Guard is establishing temporary regulations in the Delaware River, Philadelphia, Pennsylvania for OPSAIL 2000 activities. This action is necessary to provide for the safety of life on navigable waters before, during, and after OPSAIL 2000 events. This action will restrict vessel traffic in the Delaware River between Anchorage 9 (Mantua Creek anchorage) and the Benjamin Franklin Bridge.

DATES: This rule is effective from 8 a.m. on June 22, 2000 through 4 p.m. on June 23, 2000.

ADDRESSES: Comments and material received from the public, as well as documents indicated in this preamble as being available in the docket, are part of docket CGD05–00–002 and are available for inspection or copying at Coast Guard Marine Safety Office/Group Philadelphia, One Washington Avenue, Philadelphia, Pennsylvania 19147 between 8 a.m. and 3 p.m., Monday through Friday, except Federal holidays.

FOR FURTHER INFORMATION CONTACT: Lieutenant Junior Grade K. Codel, Coast Guard Marine Safety Office/Group Philadelphia, (215) 271–4991.

SUPPLEMENTARY INFORMATION:

Regulatory Information

On March 28, 2000, we published a notice of proposed rulemaking (NPRM) entitled OPSAIL 2000, Delaware River, Philadelphia, PA in the **Federal Register** (65 FR 16361). We received no letters commenting on the proposed rule. No public hearing was requested and none was held.

Background and Purpose

Philadelphia OPSAIL 2000, Inc., is sponsoring OPSAIL 2000 activities in the Delaware River, Philadelphia, Pennsylvania. Planned events include the arrival of a number of international Tall Ships at Anchorage 9 (Mantua Creek anchorage) on June 22, 2000 and a Parade of Sail from that anchorage, upriver to the Benjamin Franklin Bridge on June 23, 2000.

The Coast Guard anticipates a large spectator fleet for this event. Operators should expect significant vessel congestion along the parade route.

The purpose of these regulations is to promote maritime safety and protect participants and the boating public immediately prior to, during, and after the scheduled event. The regulations will establish a clear parade route for the OPSAIL 2000 vessels, provide a safety buffer around the participating vessels while they are at anchor and in

transit, and in certain anchorage areas, modify existing anchorage regulations for the benefit of participants and spectators. The regulations will affect the movement of all vessels operating in the specified areas of the Delaware River.

It may be necessary for the Coast Guard to establish safety or security zones in addition to these regulations to safeguard dignitaries and certain vessels participating in the event. If the Coast Guard deems it necessary to establish such zones at a later date, the details of those zones will be announced separately via the **Federal Register**, Local Notice to Mariners, Safety Voice Broadcasts, and any other means available.

All vessel operators and passengers are reminded that vessels carrying passengers for hire or that have been chartered and are carrying passengers may have to comply with certain additional rules and regulations beyond the safety equipment requirements for all pleasure craft. When a vessel is not being used exclusively for pleasure, but rather is engaged in carrying passengers for hire or has been chartered and is carrying the requisite number of passengers, the vessel operator must possess an appropriate license and the vessel may be subject to inspection. The definition of the term ''passenger for hire'' is found in 46 U.S.C. 2101(21a). In general, it means any passenger who has contributed any consideration (monetary or otherwise) either directly or indirectly for carriage onboard the vessel. The definition of the term ''passenger'' is found in 46 U.S.C. 2101(21). It varies depending on the type of vessel, but generally means individuals carried aboard vessels except for certain specified individuals engaged in the operation of the vessel or the business of the owner/charterer. The law provides for substantial penalties for any violation of applicable license and inspection requirements. If you have any questions concerning the application of the above law to your particular case, you should contact the Coast Guard at the address listed in **ADDRESSES** for additional information.

Vessel operators are reminded they must have sufficient facilities on board their vessels to retain all garbage and untreated sewage. Discharge of either into any waters of the United States is strictly forbidden. Violators may be assessed civil penalties up to $25,000 or face criminal prosecution.

We recommend that vessel operators visiting the Philadelphia area for this event obtain an up to date edition of National Ocean Service Chart 12313 to avoid anchoring within a charted cable or pipeline area.

With the arrival of OPSAIL 2000 and spectator vessels in the Philadelphia area for this event, it will be necessary to curtail normal port operations to some extent. Interference will be kept to the minimum considered necessary to ensure the safety of life on the navigable waters immediately before, during, and after the scheduled events.

Discussion of the Rule

The OPSAIL 2000 vessels are scheduled to arrive at Anchorage 9 (Mantua Creek anchorage) on June 22, 2000. The lead vessel is scheduled to begin the Parade of Sail at 9 a.m. on June 23, 2000, and will follow a parade route of approximately 8 nautical miles from that anchorage, upriver to the Benjamin Franklin Bridge. Two larger OPSAIL 2000 vessels which are unable to sail under the Walt Whitman Bridge will depart the Parade of Sail in the vicinity of the Schuylkill River and be berthed at the Philadelphia Naval Shipyard. The remainder of the OPSAIL 2000 vessels will be berthed along the Philadelphia, PA and Camden, NJ waterfronts as they complete the Parade of Sail.

The safety of parade participants and spectators will require that spectator craft be kept at a safe distance from the parade route during these vessel movements. The Coast Guard will be using safety zones along the parade route to keep all vessels not involved in the Parade of Sail a safe distance from the OPSAIL 2000 vessels. The parade route has been segmented in this rulemaking to facilitate the earliest possible reopening of the waterway once all OPSAIL 2000 vessels have cleared a particular segment of the route, but portions of the Delaware River will remain closed to all traffic until all of the OPSAIL 2000 vessels are safely moored at their assigned berths or have departed the event area.

The Coast Guard is temporarily modifying the existing anchorage regulations found at 33 CFR 110.157 to accommodate OPSAIL 2000 and spectator vessels. Anchorage 9 will be closed to all vessels except OPSAIL 2000 vessels that will be using it as the staging area for the Parade of Sail. Vessels will not be allowed to anchor in Anchorage 10 and Anchorage 11 to enable spectator vessels to safely follow the Parade of Sail. The southern portion of Anchorage 13, and the northern portion of Anchorage 12 will be closed because they are in the portion of the river that the OPSAIL 2000 vessels will be using to maneuver in preparation of mooring. The southern portion of Anchorage 12 will be designated exclusively for spectator vessels.

Discussion of Comments and Changes

We did not receive any comments on the proposed rule. No changes were made to the proposed rule.

Regulatory Evaluation

This rule is not a ''significant regulatory action'' under section 3(f) of Executive Order 12866 and does not require an assessment of potential costs and benefits under section 6(a)(3) of that Order. The Office of Management and Budget has not reviewed it under that Order. It is not significant under the regulatory policies and procedures of the Department of Transportation (DOT) (44 FR 11040; February 26, 1979).

We expect the economic impact of this rule to be so minimal that a full Regulatory Evaluation under paragraph 10e of the regulatory policies and procedures of DOT is unnecessary.

The primary impact of these regulations will be on vessels wishing to transit the affected waterways during the Parade of Sail on June 23, 2000. Although these regulations prevent traffic from transiting portions of the Delaware River during the event, that restriction is limited in duration, affects only a limited area, and will be well publicized to allow mariners to make alternative plans for transiting the affected area. Moreover, the magnitude of the event itself will severely hamper or prevent transit of the waterway, even absent these regulations designed to ensure it is conducted in a safe and orderly fashion.

Small Entities

Under the Regulatory Flexibility Act (5 U.S.C. 601–612), we considered whether this rule would have a significant economic impact on a substantial number of small entities. The term ''small entities'' comprises small businesses, not-for-profit organizations that are independently owned and operated and are not dominant in their fields, and governmental jurisdictions with populations of less than 50,000.

The Coast Guard certifies under 5 U.S.C. 605(b) that this rule will not have a significant economic impact on a substantial number of small entities.

This rule will affect the following entities, some of which might be small entities: the owners or operators of vessels intending to operate or anchor in portions of the Delaware River in the vicinity of Philadelphia, Pennsylvania. The regulations will not have a significant impact on a substantial number of small entities for the

following reasons: the restrictions are limited in duration, affect only limited areas, and will be well publicized to allow mariners to make alternative plans for transiting the affected areas. Moreover, the magnitude of the event itself will severely hamper or prevent transit of the waterway, even absent these regulations designed to ensure it is conducted in a safe and orderly fashion.

Assistance for Small Entities

Under section 213(a) of the Small Business Regulatory Enforcement Fairness Act of 1996 (Pub. L. 104–121), we offered to assist small entities in understanding this rule so that they could better evaluate its effects on them and participate in the rulemaking process. No requests for assistance in understanding this rule were received.

Small businesses may send comments on the actions of the Federal employees who enforce, or otherwise determine compliance with, Federal regulations to the Small Business and Agriculture Regulatory Enforcement Ombudsman and the Regional Small Business Regulatory Fairness Boards. The Ombudsman evaluates these actions annually and rates each agency's responsiveness to small business. If you wish to comment on actions by employees of the Coast Guard, call 1–888–REG–FAIR (1–888–734–3247).

Collection of Information

This rule calls for no new collection of information under the Paperwork Reduction Act of 1995 (44 U.S.C. 3501–3520).

Federalism

We have analyzed this rule under E.O. 13132 and have determined that this rule does not have implications for federalism under that Order.

Unfunded Mandates Reform Act

The Unfunded Mandates Reform Act of 1995 (2 U.S.C. 1531–1538) governs the issuance of Federal regulations that require unfunded mandates. An unfunded mandate is a regulation that requires a State, local, or tribal government or the private sector to incur direct costs without the Federal Government's having first provided the funds to pay those costs. This rule will not impose an unfunded mandate.

Taking of Private Property

This rule will not effect a taking of private property or otherwise have taking implications under E.O. 12630, Governmental Actions and Interference with Constitutionally Protected Property Rights.

Civil Justice Reform

This rule meets applicable standards in sections 3(a) and 3(b)(2) of E.O. 12988, Civil Justice Reform, to minimize litigation, eliminate ambiguity, and reduce burden.

Protection of Children

We have analyzed this rule under E.O. 13045, Protection of Children from Environmental Health Risks and Safety Risks. This rule is not an economically significant rule and does not concern an environmental risk to health or risk to safety that may disproportionately affect children.

Environment

We considered the environmental impact of this rule and concluded that, under figure 2–1, paragraph (34)(g), of Commandant Instruction M16475.1C, this rule is categorically excluded from further environmental documentation. A ''Categorical Exclusion Determination'' is available in the docket where indicated under **ADDRESSES.** By controlling vessel traffic during these events, this rule is intended to minimize environmental impacts of increased vessel traffic during the transits of event vessels.

List of Subjects

33 CFR Part 110

Anchorage grounds.

33 CFR Part 165

Harbors, Marine safety, Navigation (water), Reporting and recordkeeping requirements, Security measures, Waterways.

Regulation

For the reasons discussed in the preamble, the Coast Guard amends 33 CFR Parts 110, and 165 as follows:

PART 110—[AMENDED]

1. The authority citation for Part 110 continues to read as follows:

Authority: 33 U.S.C. 471, 1221 through 1236, 2030, 2035, 2071; 49 CFR 1.46 and 33 CFR 1.05–1(g).

2. From 8 a.m. on June 22, 2000 until 4 p.m. on June 23, 2000 § 110.157 is amended by adding paragraph (d) to read as follows:

§ 110.157 Delaware Bay and River.-

* * * * *

(d) Not withstanding paragraphs (a) through (c) of this section, the following temporary regulations are in effect from 8 a.m. on June 22, 2000 until 4 p.m. on June 23, 2000 for OPSAIL 2000.

(1) Anchorage 9 will be closed to all vessels except OPSAIL 2000 vessels. ''OPSAIL 2000 vessels'' includes all vessels participating in Operation Sail 2000 under the auspices of the Marine Event Permit submitted for the Port of Philadelphia and approved by the Commander, Fifth Coast Guard District.

(2) No vessel may anchor in Anchorage 10, or Anchorage 13 south of the Benjamin Franklin Bridge, without permission of the Captain of the Port.

(3) No vessel may anchor in Anchorage 11 after 1 a.m. on June 23, 2000 without permission of the Captain of the Port.

(4) Anchorage 12:

(i) No vessel may anchor north of latitude 39°55′41″ N without permission of the Captain of the Port.

(ii) South of latitude 39° 55′ 41″ N is designated for the exclusive use of spectator vessels. ''Spectator vessels'' includes any vessel, commercial or recreational, being used for pleasure or carrying passengers, that is in the Port of Philadelphia to observe part or all of the events attendant to OPSAIL 2000.

PART 165—[AMENDED]

3. The authority citation for Part 165 continues to read as follows:

Authority: 33 U.S.C. 1225 and 1231; 50 U.S.C. 191; 33 CFR 1.05–1(g), 6.04–1, 6.04–6, and 160.5; 49 CFR 1.46. Section 165.100 is also issued under authority of Sec. 311, Pub. L. 105–383.

4. Add temporary § 165.T05–002 to read as follows:

§ 165.T05–002 Safety Zone; OPSAIL 2000, Delaware River, Philadelphia, PA.

(a) *Definitions:* (1) *Captain of the Port* means the Commanding Officer of the Coast Guard Marine Safety Office/Group Philadelphia or any Coast Guard commissioned, warrant, or petty officer who has been authorized by the Captain of the Port to act on his behalf.

(2) *Coast Guard Patrol Commander* is a commissioned, warrant, or petty officer of the Coast Guard who has been designated by the Commanding Officer, Coast Guard Marine Safety Office/Group Philadelphia.

(3) *OPSAIL 2000 Vessels* includes all vessels participating in Operation Sail 2000 under the auspices of the Marine Event Permit submitted for the Port of Philadelphia and approved by Commander, Fifth Coast Guard District.

(b) *Location.* The following areas are Safety Zones:

(1) *Parade of Sail—First Segment:* This moving safety zone includes all waters from 500 yards forward of the lead OPSAIL 2000 vessel to 100 yards aft of the last OPSAIL 2000 vessel, and extending 50 yards outboard of each OPSAIL 2000 vessel participating in the

Parade of Sail. This safety zone will move with the Parade of Sail as it transits the Delaware River from Anchorage 9 (Mantua Creek anchorage) to the Walt Whitman Bridge.

(2) *Parade of Sail—Second Segment:* All waters of the Delaware River, from shoreline to shoreline, bounded on the south by the Walt Whitman Bridge and on the north by the Benjamin Franklin Bridge with the exception of the southern portion of Anchorage 12, defined as that portion of the anchorage south of latitude 39° 55′ 41″ N.

(c) *Regulations.* (1) All persons are required to comply with the general regulations governing safety zones in § 165.23 of this part.

(2) No person or vessel may enter or navigate within these regulated areas unless authorized to do so by the Coast Guard Patrol Commander. Any person or vessel authorized to enter the regulated area must operate in strict conformance with any directions given by the Captain of the Port and leave the regulated area immediately if the Coast Guard Patrol Commander so orders.

(3) The Coast Guard vessels enforcing this section can be contacted on VHF Marine Band Radio, channels 13 and 16. The Captain of the Port can be contacted at telephone number (215) 271–4940.

(4) The Coast Guard Patrol Commander will notify the public of changes in the status of these zones by Marine Safety Radio Broadcast on VHF–FM marine band radio, channel 22 (157.1 MHZ).

(d) *Effective dates:* This section is effective from 8 a.m. on June 22, 2000 through 4 p.m. on June 23, 2000.

Dated: May 12, 2000.

Thomas E. Bernard,

Captain, U.S. Coast Guard, Acting Commander, Fifth Coast Guard District.

[FR Doc. 00–12746 Filed 5–17–00; 12:28 pm]

BILLING CODE 4910–15–P

POSTAL SERVICE

39 CFR Part 952

Rules of Practice in Proceedings Relative to False Representation and Lottery Orders

AGENCY: Postal Service.

ACTION: Final rule.

SUMMARY: This final rule amends the Rules of Practice in Proceedings Relative to False Representation and Lottery Orders to establish administrative procedures for issuing subpoenas and imposing the statutorily authorized civil penalties in proceedings conducted under 39 U.S.C. 3005(a).

EFFECTIVE DATE: May 22, 2000.

FOR FURTHER INFORMATION CONTACT: Diane M. Mego, Esq., (703) 812–1905.

SUPPLEMENTARY INFORMATION: On March 14, 2000, the Postal Service published in the **Federal Register** a proposed rule to amend the Rules of Practice in Proceedings Relative to False Representation and Lottery Orders (65 FR 13707–13709). The proposed rule implements The Deceptive Mail Prevention and Enforcement Act, Pub. L. 106–168, 113 Stat. 1806, enacted on December 12, 1999, which grants the Judicial Officer authority to issue subpoenas requiring the attendance and testimony of witnesses and the production of any records (including books, papers, documents, and other tangible things which constitute or contain evidence) which the Judicial Officer considers relevant or material in any statutory proceeding conducted under 39 U.S.C. 3005(a). The Act also authorizes new administrative civil penalties.

Comments on the proposed rule were due on or before April 13, 2000. Two comments were received. One commenter was concerned that the proposed time limits for requesting a subpoena do not give the subpoenaed party a reasonable opportunity to comply with a document request or to appear at the hearing. The proposed time limits are consistent with the time limits already provided in part 952 and, therefore, have not been revised in this final rule. However, the rule recognizes the possibility that further time may be needed, and the presiding officer, at his discretion, may waive the time limits in the appropriate circumstances.

The other commenter, however, believed that the language allowing the presiding officer to exercise his discretion in granting subpoenas outside the proposed time limits improperly created standardless discretion in the presiding officer that could violate the subpoenaed individual's due process rights. Contrary to the commenter's belief, the rule could never be fashioned to cover every possibility that could arise throughout a proceeding. Granting the presiding officer the right to exercise his discretion protects the parties' rights by allowing the presiding officer to conduct each proceeding fairly. Therefore, the discretion language has been adopted as proposed.

The second commenter was also concerned that the proposed rule exceeds the authority granted by the Act by allowing the presiding officer to issue the subpoena, permitting the Judicial Officer to seek enforcement of a subpoena, and not providing sufficient oversight for the issuance of subpoenas.

Two of the comments concern the right to delegate authority. The commenter questions authorizing the presiding officer to issue subpoenas when 39 U.S.C. 3016(a)(2) gives that authority to the Judicial Officer. The commenter points out that the Act specifies that the Postmaster General may delegate the subpoena authority in investigations, but does not contain similar provisions applicable to the Judicial Officer. The language relied on by the commenter with respect to investigative subpoenas appears to be a specific limitation on the right to delegate, however, rather than a grant of authority to delegate. By limiting the authority to approve a subpoena during an investigation to only the Postmaster General, the General Counsel or Deputy General Counsel, the Act assures that the subpoena authority remains with a high-level official. Absent a specific, legislative intent to limit the Judicial Officer's ability to delegate his authority, the subpoena authority is impliedly delegable to the presiding officer, a high-level and independent official under his supervision.

The commenter also questions the authority of the Judicial Officer to seek enforcement of a subpoena when 39 U.S.C. 3016(c)(1) gives that authority to the Postmaster General. However, the ability of the Postmaster General to delegate this enforcement authority is not limited by the statute. Further, the Postmaster General would be considered one of the parties to any proceeding conducted under part 952. Therefore, it makes sense that the authority to seek enforcement of a subpoena should be delegated to the Judicial Officer absent a specific limitation on that authority by Congress.

The final comment concerns the form and issuance of the subpoena. The commenter was concerned that the proposed language did not offer sufficient oversight of the subpoena process by allowing the presiding officer to enter the name of the witness and sign the subpoena, but otherwise allow the requesting party to complete the subpoena before service. The proposed rules provide sufficient oversight by requiring the requesting party to ''state the reasonable scope and general relevance to the case of the testimony and any records sought,'' which provides initial review by the presiding officer, and by allowing a motion to quash, which gives the presiding officer a further review if necessary. Furthermore, issuing subpoenas signed but otherwise in blank is a standard

practice (cf. Fed. R. Civ. P. 45(a)(3)). After careful review, the Judicial Officer determined that the proposed language does not require revision.

With regard to the effective date, the Postal Service has determined that there is good cause to make the new regulations effective upon publication. The public interest in the enforcement of consumer protection laws would not be served by delaying the application of subpoena requirements to persons who are subject to false representation or lottery proceedings under 39 U.S.C. 3005(a).

The Postal Service hereby adopts the following amendments to 39 CFR part 952.

List of Subjects in 39 CFR Part 952

Administrative practice and procedure, False representations, Fraud, Lotteries, Penalties, Postal Service.

PART 952—[AMENDED]

1. The authority citation for part 952 is revised to read as follows:

Authority: 39 U.S.C. 204, 401, 3005, 3012, 3016.

§ 952.5 [Amended]

2. Section 952.5 is amended by adding ''and/or the assessment of civil penalties'' to the end of the first sentence.

§ 952.7 [Amended]

3. Section 952.7(b) is amended by:

A. Adding ''and/or the assessment of civil penalties authorized by 39 U.S.C. 3012'' to the end of the first sentence; and

B. Adding ''tentatively assess such civil penalties as he considers appropriate under applicable law;'' after the phrase ''release of mail unrelated to the matter complained of;'' in the third sentence.

§ 952.11 [Amended]

4. Section 952.11 is amended by:

A. Adding ''and/or assess civil penalties'' after ''orders'' in the second sentence of paragraph (a); and

B. Adding ''and/or assess civil penalties'' after ''orders'' in paragraph (b).

§ 952.17 [Amended]

5. Section 952.17(b)(10) is amended by adding ''§ 952.19 and'' before ''§ 952.21''.

6. Section 952.19 is revised to read as follows:

§ 952.19 Subpoenas.

(a) *General.* Upon written request of either party filed with the Recorder or on his own initiative, the presiding officer may issue a subpoena requiring:

(1) *Testimony at a deposition.* The deposing of a witness in the city or county where the witness resides or is employed or transacts business in person, or at another location convenient for the witness that is specifically determined by the presiding officer;

(2) *Testimony at a hearing.* The attendance of a witness for the purpose of taking testimony at a hearing; and

(3) *Production of records.* In addition to paragraphs (a)(1) and (a)(2) of this section, the production by the witness at the deposition or hearing of records designated in the subpoena.

(b) *Voluntary cooperation.* Each party is expected:

(1) To cooperate and make available witnesses and evidence under its control as requested by the other party, without issuance of a subpoena, and

(2) To secure voluntary production of desired third-party records whenever possible.

(c) *Requests for subpoenas.* (1) A request for a subpoena shall to the extent practical be filed:

(i) At the same time a request for deposition is filed; or

(ii) 15 days before a scheduled hearing where the attendance of a witness at a hearing is sought.

(2) A request for a subpoena shall state the reasonable scope and general relevance to the case of the testimony and of any records sought.

(3) The presiding officer, in his discretion, may honor requests for subpoenas not made within the time limitations specified in this paragraph.

(d) *Requests to quash or modify.* Upon written request by the person subpoenaed or by a party, made within 10 days after service but in any event not later than the time specified in the subpoena for compliance, the presiding officer may:

(1) Quash or modify the subpoena if it is unreasonable and oppressive or for other good cause shown, or

(2) require the person in whose behalf the subpoena was issued to advance the reasonable cost of producing subpoenaed records. Where circumstances require, the presiding officer may act upon such a request at any time after a copy has been served upon the opposing party.

(e) *Form; issuance.* (1) Every subpoena shall state the title of the proceeding, shall cite 39 U.S.C. 3016(a)(2) as the authority under which it is issued, and shall command each person to whom it is directed to attend and give testimony, and if appropriate, to produce specified records at a time and place therein specified. In issuing a subpoena to a requesting party, the presiding officer shall sign the subpoena and may, in his discretion, enter the name of the witness and otherwise leave it blank. The party to whom the subpoena is issued shall complete the subpoena before service.

(2) The party at whose instance a subpoena is issued shall be responsible for the payment of fees and mileage of the witness and of the officer who serves the subpoena. The failure to make payment of such charges on demand may be deemed by the presiding officer as sufficient ground for striking the testimony of the witness and the evidence the witness has produced.

(f) *Service.* (1) *In general.* The party requesting issuance of a subpoena shall arrange for service.

(2) *Service within the United States.* A subpoena issued under this section may be served by a person designated under 18 U.S.C. 3061 or by a United States marshal or deputy marshal, or by any other person who is not a party and not less than 18 years of age at any place within the territorial jurisdiction of any court of the United States.

(3) *Foreign Service.* Any such subpoena may be served upon any person who is not to be found within the territorial jurisdiction of any court of the United States, in such manner as the Federal Rules of Civil Procedure prescribe for service in a foreign country. To the extent that the courts of the United States may assert jurisdiction over such person consistent with due process, the United States District Court for the District of Columbia shall have the same jurisdiction to take any action respecting compliance with this section by such person that such court would have if such person were personally within the jurisdiction of such court.

(4) *Service on Business Persons.* Service of any such subpoena may be made upon a partnership, corporation, association, or other legal entity by:

(i) Delivering a duly executed copy thereof to any partner, executive officer, managing agent, or general agent thereof, or to any agent thereof authorized by appointment or by law to receive service of process on behalf of such partnership, corporation, association, or entity;

(ii) Delivering a duly executed copy thereof to the principal office or place of business of the partnership, corporation, association, or entity; or

(iii) Depositing such copy in the United States mails, by registered or certified mail, return receipt requested, duly addressed to such partnership,

corporation, association, or entity at its principal office or place of business.

(5) *Service on Natural Persons.* Service of any subpoena may be made upon any natural person by:

(i) delivering a duly executed copy to the person to be served; or

(ii) depositing such copy in the United States mails, by registered or certified mail, return receipt requested, duly addressed to such person at his residence or principal office or place of business.

(6) *Verified Return.* A verified return by the individual serving any such subpoena setting forth the manner of such service shall be proof of service. In the case of service by registered or certified mail, such return shall be accompanied by the return post office receipt of delivery of such subpoena.

(g) *Contumacy or refusal to obey a subpoena.* In the case of contumacy or refusal to obey a subpoena, the Judicial Officer may request the Attorney General to petition the district court for any district in which the person receiving the subpoena resides, is found, or conducts business (or in the case of a person outside the territorial jurisdiction of any district court, the district court for the District of Columbia) to issue an appropriate order for the enforcement of such subpoena. Any failure to obey such order of the court may be punishable as contempt.

Stanley F. Mires,

Chief Counsel, Legislative.

[FR Doc. 00–12784 Filed 5–19–00; 8:45 am]

BILLING CODE 7710–12–U

ENVIRONMENTAL PROTECTION AGENCY

40 CFR Part 52

[MN60–01–7285a; FRL–6604–5]

Approval and Promulgation of Implementation Plans; Minnesota

AGENCY: Environmental Protection Agency (EPA).

ACTION: Direct final rule.

SUMMARY: We are approving a site-specific revision to the Minnesota particulate matter (PM) State Implementation Plan (SIP) for LTV Steel Mining Company (LTV), formerly known as Erie Mining Company, located in St. Louis County, Minnesota. The Minnesota Pollution Control Agency (MPCA) submitted this SIP revision on September 29, 1998 in response to a request from LTV that EPA remove the Stipulation Agreement for Erie Mining Company from the State SIP. The rationale for the approval and other information are provided in this notice.

DATES: This action is effective on July 21, 2000 without further notice, unless EPA receives relevant adverse comments by June 21, 2000. If adverse comments are received, EPA will publish a timely withdrawal of the direct final rule in the **Federal Register** informing the public that the rule will not take effect.

ADDRESSES: Written comments may be mailed to: Carlton Nash, Chief, Regulation Development Section, Air Programs Branch (AR–18J), United States Environmental Protection Agency, 77 West Jackson Boulevard, Chicago, Illinois 60604. Copies of the documents relevant to this action are available for inspection during normal business hours at the above address. (Please telephone Christos Panos at (312) 353–8328, before visiting the Region 5 office.)

FOR FURTHER INFORMATION CONTACT: Christos Panos, Regulation Development Section, Air Programs Branch (AR–18J), Air and Radiation Division, United States Environmental Protection Agency, Region 5, 77 West Jackson Boulevard, Chicago, Illinois 60604, (312) 353–8328.

SUPPLEMENTARY INFORMATION: This supplementary information section is organized as follows:

A. What Action Is EPA Taking Today?
B. Why Was This SIP Revision Submitted?
C. Why Can We Approve This Request?
D. What Is the Background for This Rulemaking?

A. What Action Is EPA Taking Today?

We are approving MPCA's September 29, 1998 request for a site-specific revision to the Minnesota PM SIP. Specifically, we are approving the removal of the Stipulation Agreement for LTV Steel Mining Company, formerly known as Erie Mining Company, from the State PM SIP.

B. Why Was This SIP Revision Submitted?

The State requested that EPA remove the Stipulation Agreement from the SIP because the Agreement was initially submitted as a SIP to: (a) Provide a variance from state SIP rules for three years; and (b) provide a mechanism to make the 90 percent control efficiency federally enforceable. In its submittal, MPCA concludes that the Stipulation Agreement was satisfied on LTV's part because the source modified their air pollution control equipment to achieve 90 percent control efficiency, tested the furnaces, and submitted opacity data to support a higher opacity limit during the specified time frame. Further, MPCA did not act on the adjusted opacity limit provided for in the Stipulation Agreement by not issuing a facility permit which would have finalized a revised opacity limitation.

C. Why Can We Approve This Request?

At the time of the approval of the Stipulation Agreement, the National Ambient Air Quality Standards (NAAQS) for particulate matter were based on the total suspended particulates (TSP) indicator. On July 1, 1987 EPA replaced TSP as the indicator for the PM ambient standard with a new indicator that includes only those particles with an aerodynamic diameter less than or equal to a nominal 10 micrometers.

We are approving the current SIP submittal as a Direct Final **Federal Register** notice because removing the Stipulation Agreement from the SIP would pose no threat to continued maintenance of the PM NAAQS in the area. The state rules for particulate and opacity standards, which would become applicable to LTV, are contained in the federally approved PM SIP for Minnesota and are therefore federally enforceable.

Further, although section 193 of the Clean Air Act Amendments of 1990 (November 15, 1990) requires equivalent or greater emission reductions for modifications to control requirements in effect before the date of enactment of the 1990 Amendments, this requirement does not apply in this case because the area is designated attainment for PM and the Stipulation Agreement was not required for a nonattainment area plan. Additional information is available in our November 30, 1999 Technical Support Document (TSD).

D. What Is the Background for This Rulemaking?

On February 20, 1981 the State submitted to EPA a Stipulation Agreement for LTV as a revision to Minnesota's total suspended particulates (TSP) SIP. Emissions from 27 furnaces at LTV, located in St. Louis County, Minnesota, (designated a TSP attainment area), exceeded the State's opacity and particulate matter limitations. Therefore, MPCA and LTV entered into a Stipulation Agreement which would allow LTV to exceed the requirements of the State rules until December 31, 1983.

The Stipulation Agreement required LTV to implement a control strategy which would provide for 90 percent control, 5 percent more than required by the State rules, by December 31, 1983. An opacity limit was also to be

developed to reflect 90 percent control. Because LTV was located in a TSP attainment area and the TSP NAAQS would be protected during the period of the agreement, EPA approved the Stipulation Agreement into Minnesota's TSP SIP on November 27, 1981 at 46 FR 57893.

EPA Action

In this rulemaking action, EPA approves the removal of the Stipulation Agreement for LTV Steel Mining Company, formerly known as Erie Mining Company, from the State PM SIP. The EPA is publishing this action without prior proposal because the Agency views this as a noncontroversial amendment and anticipates no adverse comments. However, in the proposed rules section of this **Federal Register** publication, the EPA is publishing a separate document that will serve as the proposal to approve the State Plan should relevant adverse comments be filed. This rule will be effective July 21, 2000 without further notice unless relevant adverse comments are received by June 21, 2000. If EPA receives such comments, this action will be withdrawn before the effective date by publishing a subsequent document that will withdraw the final action. All public comments received will then be addressed in a subsequent final rule based on the proposed action. The EPA will not institute a second comment period. Any parties interested in commenting on this action should do so at this time. If no such comments are received, the public is advised that this action will be effective July 21, 2000.

Nothing in this action should be construed as permitting or allowing or establishing a precedent for any future implementation plan. Each request for revision to the state implementation plan shall be considered separately in light of specific technical, economic, and environmental factors and in relation to relevant statutory and regulatory requirements.

Administrative Requirements

A. Executive Order 12866

The Office of Management and Budget (OMB) has exempted this regulatory action from Executive Order 12866, entitled ''Regulatory Planning and Review.''

B. Executive Order 13045

Protection of Children from Environmental Health Risks and Safety Risks (62 FR 19885, April 23, 1997), applies to any rule that: (1) Is determined to be ''economically significant'' as defined under Executive Order 12866; and (2) concerns an environmental health or safety risk that EPA has reason to believe may have a disproportionate effect on children. If the regulatory action meets both criteria, the Agency must evaluate the environmental health or safety effects of the planned rule on children, and explain why the planned regulation is preferable to other potentially effective and reasonably feasible alternatives considered by the Agency.

This rule is not subject to Executive Order 13045 because it does not involve decisions intended to mitigate environmental health or safety risks.

C. Executive Order 13084

Under Executive Order 13084, EPA may not issue a regulation that is not required by statute, that significantly affects or uniquely affects the communities of Indian tribal governments, and that imposes substantial direct compliance costs on those communities, unless the Federal government provides the funds necessary to pay the direct compliance costs incurred by the tribal governments, or EPA consults with those governments. If EPA complies by consulting, Executive Order 13084 requires EPA to provide to the Office of Management and Budget, in a separately identified section of the preamble to the rule, a description of the extent of EPA's prior consultation with representatives of affected tribal governments, a summary of the nature of their concerns, and a statement supporting the need to issue the regulation. In addition, Executive Order 13084 requires EPA to develop an effective process permitting elected officials and other representatives of Indian tribal governments ''to provide meaningful and timely input in the development of regulatory policies on matters that significantly or uniquely affect their communities.''

Today's rule does not significantly or uniquely affect the communities of Indian tribal governments. This action does not involve or impose any requirements that affect Indian Tribes. Accordingly, the requirements of section 3(b) of Executive Order 13084 do not apply to this rule.

D. Executive Order 13132

Federalism (64 FR 43255, August 10, 1999) revokes and replaces Executive Orders 12612 (Federalism) and 12875 (Enhancing the Intergovernmental Partnership). Executive Order 13132 requires EPA to develop an accountable process to ensure ''meaningful and timely input by State and local officials in the development of regulatory policies that have federalism implications.'' ''Policies that have federalism implications'' is defined in the Executive Order to include regulations that have ''substantial direct effects on the States, on the relationship between the national government and the States, or on the distribution of power and responsibilities among the various levels of government.'' Under Executive Order 13132, EPA may not issue a regulation that has federalism implications, that imposes substantial direct compliance costs, and that is not required by statute, unless the Federal government provides the funds necessary to pay the direct compliance costs incurred by State and local governments, or EPA consults with State and local officials early in the process of developing the proposed regulation. EPA also may not issue a regulation that has federalism implications and that preempts State law unless the Agency consults with State and local officials early in the process of developing the proposed regulation.

This rule will not have substantial direct effects on the States, on the relationship between the national government and the States, or on the distribution of power and responsibilities among the various levels of government, as specified in Executive Order 13132, because it merely approves a state rule implementing a federal standard, and does not alter the relationship or the distribution of power and responsibilities established in the Clean Air Act. Thus, the requirements of section 6 of the Executive Order do not apply to this rule.

E. Regulatory Flexibility

The Regulatory Flexibility Act (RFA) generally requires an agency to conduct a regulatory flexibility analysis of any rule subject to notice and comment rulemaking requirements unless the agency certifies that the rule will not have a significant economic impact on a substantial number of small entities. Small entities include small businesses, small not-for-profit enterprises, and small governmental jurisdictions.

This rule will not have a significant impact on a substantial number of small entities because SIP approvals under section 110 and subchapter I, part D of the Clean Air Act do not create any new requirements but simply approve requirements that the State is already imposing. Therefore, because the Federal SIP approval does not create any new requirements, I certify that this action will not have a significant economic impact on a substantial

number of small entities. Moreover, due to the nature of the Federal-State relationship under the Clean Air Act, preparation of flexibility analysis would constitute Federal inquiry into the economic reasonableness of state action. The Clean Air Act forbids EPA to base its actions concerning SIPs on such grounds. *Union Electric Co.,* v. *U.S. EPA,* 427 U.S. 246, 255–66 (1976); 42 U.S.C. 7410(a)(2).

F. Unfunded Mandates

Under sections 202 of the Unfunded Mandates Reform Act of 1995 (''Unfunded Mandates Act''), signed into law on March 22, 1995, EPA must prepare a budgetary impact statement to accompany any proposed or final rule that includes a Federal mandate that may result in estimated costs to State, local, or tribal governments in the aggregate; or to the private sector, of $100 million or more. Under section 205, EPA must select the most cost-effective and least burdensome alternative that achieves the objectives of the rule and is consistent with statutory requirements. Section 203 requires EPA to establish a plan for informing and advising any small governments that may be significantly or uniquely impacted by the rule.

EPA has determined that the approval action promulgated does not include a Federal mandate that may result in estimated costs of $100 million or more to either State, local, or tribal governments in the aggregate, or to the private sector. This Federal action approves pre-existing requirements under State or local law, and imposes no new requirements. Accordingly, no additional costs to State, local, or tribal governments, or to the private sector, result from this action.

G. Submission to Congress and the Comptroller General

The Congressional Review Act, 5 U.S.C. section 801 *et seq.*, as added by the Small Business Regulatory Enforcement Fairness Act of 1996, generally provides that before a rule may take effect, the agency promulgating the rule must submit a rule report, which includes a copy of the rule, to each House of the Congress and to the Comptroller General of the United States. Section 804, however, exempts from section 801 the following types of rules: rules of particular applicability; rules relating to agency management or personnel; and rules of agency organization, procedure, or practice that do not substantially affect the rights or obligations of non-agency parties. 5 U.S.C. section 804(3). EPA is not required to submit a rule report regarding this action under section 801 because this is a rule of particular applicability.

H. National Technology Transfer and Advancement Act

Section 12 of the National Technology Transfer and Advancement Act (NTTAA) of 1995 requires Federal agencies to evaluate existing technical standards when developing a new regulation. To comply with NTTAA, EPA must consider and use ''voluntary consensus standards'' (VCS) if available and applicable when developing programs and policies unless doing so would be inconsistent with applicable law or otherwise impractical.

The EPA believes that VCS are inapplicable to this action. Today's action does not require the public to perform activities conducive to the use of VCS.

I. Petitions for Judicial Review

Under section 307(b)(1) of the Clean Air Act, petitions for judicial review of this action must be filed in the United States Court of Appeals for the appropriate circuit by July 21, 2000. Filing a petition for reconsideration by the Administrator of this final rule does not affect the finality of this rule for the purposes of judicial review nor does it extend the time within which a petition for judicial review may be filed, and shall not postpone the effectiveness of such rule or action. This action may not be challenged later in proceedings to enforce its requirements. (See section 307(b)(2).)

List of Subjects in 40 CFR Part 52

Environmental protection, Air pollution control, Intergovernmental relations, Particulate matter.

Dated: April 27, 2000.

David Ullrich,

Acting Regional Administrator, Region 5.

Title 40 of the Code of Federal Regulations, chapter I, part 52, is amended as follows:

PART 52—APPROVAL AND PROMULGATION OF IMPLEMENTATION PLANS

1. The authority citation for part 52 continues to read as follows:

Authority: 42 U.S.C. 7401 *et seq.*

2. Section 52.1220 is amended by adding paragraph (c)(53) to read as follows:

§ 52.1220 Identification of plan.

* * * * *

(c) * * *

(53) On September 29, 1998, the State of Minnesota submitted a site-specific revision to the particulate matter (PM) SIP for LTV Steel Mining Company (LTV), formerly known as Erie Mining Company, located in St. Louis County, Minnesota. This SIP revision was submitted in response to a request from LTV that EPA remove the Stipulation Agreement for Erie Mining Company from the State SIP, as was approved by EPA in paragraph (c)(18) of this section. Accordingly the Stipulation Agreement for Erie Mining Company referenced in paragraph (c)(18) of this section is removed from the SIP without replacement.

[FR Doc. 00–12642 Filed 5–19–00; 8:45 am]

BILLING CODE 6560–50–P

ENVIRONMENTAL PROTECTION AGENCY

40 CFR Part 52

[IA 104–1104; FRL–6702–9]

Approval and Promulgation of Implementation Plans; State of Iowa; Correction

AGENCY: Environmental Protection Agency (EPA).

ACTION: Final rule; correction.

SUMMARY: On April 12, 1999 (64 FR 17548), EPA published a direct final action approving revisions to the Iowa State Implementation Plan (SIP). This document makes corrections to the table of EPA-Approved Iowa Regulations. The state effective date is corrected to read May 13, 1998, and notations are added to or deleted from the ''Comments'' column.

EFFECTIVE DATE: This final rule is effective May 22, 2000.

FOR FURTHER INFORMATION CONTACT: Wayne Kaiser at (913) 551–7603.

SUPPLEMENTARY INFORMATION: In the part 52 table in subpart Q, § 52.820(c), which accompanied the April 12, 1999, document, the ''state effective date'' was listed as May 3, 1998. This action corrects the ''state effective date'' for all the rules listed, for which there has not been a subsequent revision and more current effective date, to May 13, 1998. Additionally, for rule 20.2, information has been added in the ''Comments'' column which specifies that certain portions of the rule are not SIP approved. Finally, we are deleting the notation in the ''Comments'' column for rule 25.1, which indicated that paragraph 25.1(12) was not SIP approved. All of rule 25.1 is SIP approved.

Section 553 of the Administrative Procedure Act, 5 U.S.C. 553(b)(B),

provides that, when an agency for good cause finds that notice and public procedures are impracticable, unnecessary, or contrary to the public interest, the agency may issue a rule without providing notice and an opportunity for public comment. We have determined that there is such good cause for making today's rule final without prior proposal and opportunity for comment because we are merely correcting an incorrect citation in a previous action. Thus, notice and public procedure are unnecessary.

Administrative Requirements

Under Executive Order 12866 (58 FR 51735, October 4, 1993), this action is not a ''significant regulatory action'' and therefore is not subject to review by the Office of Management and Budget. This action merely approves state law as meeting Federal requirements and imposes no additional requirements beyond those imposed by state law. Accordingly, the Administrator certifies that this rule will not have a significant economic impact on a substantial number of small entities under the Regulatory Flexibility Act (5 U.S.C. 601 *et seq.*). Because this rule merely corrects an incorrect citation in a previous action, it does not contain any unfunded mandate or significantly or uniquely affect small governments, as described in the Unfunded Mandates Reform Act of 1995 (Public Law 104–4). For the same reason, this rule also does not significantly or uniquely affect the communities of tribal governments, as specified by Executive Order 13084 (63 FR 27655, May 10, 1998). This rule will not have substantial direct effects on the states, on the relationship between the national government and the states, or on the distribution of power and responsibilities among the various levels of government, as specified in Executive Order 13132 (64 FR 43255, August 10, 1999), because it merely corrects a citation in a state rule implementing a Federal standard, and does not alter the relationship or the distribution of power and responsibilities established in the Clean Air Act (CAA). This rule also is not subject to Executive Order 13045 (62 FR 19885, April 23, 1997), because it is not economically significant.

In reviewing SIP submissions, our role is to approve state choices, provided that they meet the criteria of the CAA. In this context, in the absence of a prior existing requirement for the state to use voluntary consensus standards (VCS), we have no authority to disapprove a SIP submission for failure to use VCS. It would thus be inconsistent with applicable law for EPA, when it reviews a SIP submission, to use VCS in place of a SIP submission that otherwise satisfies the provisions of the CAA. Thus, the requirements of section 12(d) of the National Technology Transfer and Advancement Act of 1995 (15 U.S.C. 272 note) do not apply. As required by section 3 of Executive Order 12988 (61 FR 4729, February 7, 1996), in issuing this rule, we have taken the necessary steps to eliminate drafting errors and ambiguity, minimize potential litigation, and provide a clear legal standard for affected conduct. EPA has complied with Executive Order 12630 (53 FR 8859, March 15, 1988) by examining the takings implications of the rule in accordance with the ''Attorney General's Supplemental Guidelines for the Evaluation of Risk and Avoidance of Unanticipated Takings'' issued under the Executive Order. This rule does not impose an information collection burden under the provisions of the Paperwork Reduction Act of 1995 (44 U.S.C. 3501 *et seq.*).

The Congressional Review Act (CRA), 5 U.S.C. 801 *et seq.*, as added by the Small Business Regulatory Enforcement Fairness Act of 1996, generally provides that before a rule may take effect, the agency promulgating the rule must submit a rule report, which includes a copy of the rule, to each House of the Congress and to the Comptroller General of the United States. Section 808 allows the issuing agency to make a rule effective sooner than otherwise provided by the CRA if the agency makes a good cause finding that notice and public procedure is impracticable, unnecessary or contrary to the public interest. This determination must be supported by a brief statement. As stated previously, we made such a good cause finding, including the reasons therefore and established an effective date of May 22, 2000. We will submit a report containing this rule and other required information to the United States Senate, the United States House of Representatives, and the Comptroller General of the United States prior to publication of the rule in the **Federal Register**. This correction to the Iowa SIP table is not a ''major rule'' as defined by 5 U.S.C. 804 (2).

List of Subjects in 40 CFR Part 52

Environmental protection, Air pollution control, Carbon monoxide, Intergovernmental relations, Lead, Nitrogen dioxide, Ozone, Particulate matter, Reporting and recordkeeping requirements, Sulfur oxides, Volatile organic compounds.

Dated: May 10, 2000.

William Rice,

Acting Regional Administrator, Region 7.

Chapter I, Title 40 of the Code of Federal Regulations is amended as follows:

PART 52—[AMENDED]

1. The authority citation for Part 52 continues to read as follows:

Authority: 42 U.S.C. 7401 *et seq.*

Subpart Q—Iowa

2. In § 52.820(c), the following entries in the table, EPA-approved regulations, are revised to read as follows:

§ 52.820 Identification of plan.

* * * * *

(c) * * *

EPA-APPROVED IOWA REGULATIONS

Iowa citation	Title	State effective date	EPA approval date	Comments
Iowa Department of Natural Resources, Environmental Protection Commission [567]				
Chapter 20—Scope of Title-Definitions-Forms-Rule of Practice				
567–20.1	Scope of Title	5/13/98	[5/22/00 and FR cite].	
567–20.2	Definitions	10/14/98	[5/22/00 and FR cite]	The definitions for anaerobic lagoon, odor, odorous substance, and odorous substance source, are not SIP approved.
567–20.3	Air Quality Forms Generally.	5/13/98	[5/22/00 and FR cite].	

EPA-APPROVED IOWA REGULATIONS—Continued

Iowa citation	Title	State effective date	EPA approval date	Comments
*	*	*	*	*
	Chapter 22—Controlling Pollution			
567–22.1	Permits Required for New or Existing Stationary Sources.	12/23/98	[5/22/00 and FR cite]	Subrule 22.1(3) ''b'' (9) is not SIP approved.
*	*	*	*	*
567–22.4	Special Requirements for Major Stationary Sources Located in Areas Designated Attainment or Unclassified (PSD).	5/13/98	[5/22/00 and FR cite].	
567–22.5	Special Requirements for Nonattainment Areas.	5/13/98	[5/22/00 and FR cite].	
567–22.8	Permit by Rule	5/13/98	[5/22/00 and FR cite].	
*	*	*	*	*
567–22.203	Voluntary Operating Permit Applications.	10/14/98	[5/22/00 and FR cite].	
*	*	*	*	*
567–22.300	Operating Permit by Rule for Small Sources.	10/14/98	[5/22/00 and FR cite].	
	Chapter 23—Emission Standards for Contaminants			
567–23.1	Emission Standards	10/14/98	[5/22/00 and FR cite]	Subrules 23.1(2)–(5) are not SIP approved.
567–23.2	Open Burning	5/13/98	[5/22/00 and FR cite].	
567–23.3	Specific Contaminants	5/13/98	[5/22/00 and FR cite]	Subrule 23.3(3)(d) is not SIP approved.
*	*	*	*	*
	Chapter 24—Excess Emissions			
567–24.1	Excess Emission Reporting.	5/13/98	[5/22/00 and FR cite].	
*	*	*	*	*
	Chapter 25—Measurement of Emissions			
567–25.1	Testing and Sampling of New and Existing Equipment.	12/23/98	[5/22/00 and FR cite].	
*	*	*	*	*
	Chapter 29—Qualification in Visual Determination of the Opacity of Emissions			
567–29.1	Methodology and Qualified Observer.	5/13/98	[5/22/00 and FR cite]	
	Chapter 31—Nonattainment Areas			
*	*	*	*	*
567–31.2	Conformity of General Federal Actions to the Iowa SIP or Federal Implementation Plan.	5/13/98	[5/22/00 and FR cite].	
*	*	*	*	*

* * * * *

[FR Doc. 00–12646 Filed 5–19–00; 8:45 am]
BILLING CODE 6560–50–P

ENVIRONMENTAL PROTECTION AGENCY

40 CFR Parts 52 and 60

[SD–001–0010 & SD–001–0011; FRL–6603–1]

Clean Air Act Approval and Promulgation of State Implementation Plan; South Dakota; New Source Performance Standards

AGENCY: Environmental Protection Agency (EPA).

ACTION: Final rule.

SUMMARY: The EPA approves revisions to the South Dakota State implementation plan (SIP) which update the State's incorporation by reference of the Federal New Source Performance Standards (NSPS). The SIP revisions were submitted by the designee of the Governor of South Dakota on May 2, 1997 and on May 6, 1999. The State adopts the Federal NSPS by reference in subchapter 74:36:07 of the Administrative Rules of South Dakota (ARSD). The State also repealed a rule that required stack tests for asphalt batch plants, aside from the initial stack test required by the NSPS, to be performed if certain conditions existed. EPA approves the revisions to the ARSD 74:36:07 because the revisions are consistent with Federal regulations. This approval action does not extend to sources in Indian country.

EFFECTIVE DATE: This rule is effective on June 21, 2000.

ADDRESSES: Copies of the documents relative to this action are available for inspection during normal business hours at the Air and Radiation Program, Environmental Protection Agency, Region VIII, 999 18th Street, Suite 500, Denver, Colorado 80202–2466. Copies of the State documents relevant to this action are available for public inspection at the Air Quality Program, Department of Environment and Natural Resources, Joe Foss Building, 523 East Capitol, Pierre, South Dakota 57501. Documents which are incorporated by reference are available for public inspection at the Air and Radiation Docket and Information Center, Environmental Protection Agency, 401 M Street, SW, Washington, DC 20460.

FOR FURTHER INFORMATION CONTACT: Vicki Stamper, EPA Region VIII, (303) 312–6445.

SUPPLEMENTARY INFORMATION:

I. What Action Is EPA Taking Today?

We approve two revisions to the South Dakota's NSPS regulations in subchapter 74:36:07 of the ARSD, except for those sources located in Indian country. These revisions were submitted for approval as part of the SIP on May 2, 1997 and on May 6, 1999.

The State's May 2, 1997 and May 6, 1999 SIP submittals included revisions to other subchapters of the ARSD. We acted on most of those revisions submitted on May 2, 1997 in an October 19, 1998 rulemaking (see 63 FR 55804–55807). In this document, we only act on the revisions to ARSD 74:36:07. We will act on the revisions to the other subchapters of the ARSD included in these submittals in separate rulemakings.

EPA proposed to approve these revisions to South Dakota's NSPS in subchapter 74:36:07 of the ARSD in the September 21, 1999 **Federal Register** (see 64 FR 51088–51091), except for those sources located in Indian country. In that document, EPA also proposed to clarify the interpretation of Indian country in South Dakota. No comments were submitted on our proposed approval of South Dakota's SIP revisions pertaining to the NSPS. EPA did receive comments on our proposed clarification of the interpretation of Indian country in South Dakota. See Section V. of this document for further discussion.

II. What Changes Were Made to South Dakota's NSPS Regulation?

In South Dakota's May 2, 1995 SIP submittal, the State adopted four new NSPS categories in subchapter 74:36:07 of the ARSD. Specifically, the State incorporated by reference the following subparts of the Federal NSPS in 40 CFR part 60 as in effect on July 1, 1995 unless otherwise stated: subpart Eb (pertaining to large municipal waste combustors) as promulgated by EPA on December 19, 1995 (59 FR 65419–65436); 40 CFR part 60, subpart RRR (pertaining to the synthetic organic chemical manufacturing industry reactor processes); 40 CFR part 60, subpart UUU (pertaining to calciners and dryers in mineral industries); and 40 CFR part 60, subpart WWW (pertaining to municipal solid waste (MSW) landfills) as promulgated by EPA on March 12, 1996 (61 FR 9918–29). The State also updated its existing NSPS subparts to incorporate by reference the July 1, 1995 version of the Federal NSPS.

In South Dakota's May 6, 1999 SIP submittal, the State adopted one new NSPS subpart in subchapter 74:36:07 of the ARSD: 40 CFR 60, subpart Ec (pertaining to hospital/medical/infectious waste incinerators) as promulgated by EPA on September 15, 1997 (62 FR 48383–48390). The State also updated its incorporated by reference of 40 CFR part 60, subpart Eb (pertaining to municipal waste combustors) to reflect the version in effect as of July 1, 1997, and also updated its incorporation by reference of 40 CFR part 60, subpart WWW (pertaining to MSW landfills) to reflect the version as revised on June 16, 1998 (63 FR 32750–32753). Last, the State repealed its additional provisions for asphalt batch plants in Section 74:36:07:11 of the ARSD. This section previously required stack tests at asphalt batch plants, aside from the initial stack test required by the NSPS, if certain conditions existed. The State repealed this section because it was repetitive with recent changes to the ARSD. The State still has the ability to require stack performance tests at any time to determine compliance with emission limits.

III. Why Is EPA Approving the South Dakota Revisions to the NSPS?

EPA approves these revisions to South Dakota's NSPS in ARSD 74:36:07 because the revisions ensure that the State's NSPS are up to date with the Federal NSPS.

We also believe the State met EPA's completeness criteria, including the public participation requirements of sections 110(a)(2) and 110(l) of the Clean Air Act, for the adoption of these revisions to ARSD 74:36:07. Specifically, the State of South Dakota held a public hearing on November 20, 1996, after providing notice to the public, for the revisions to the ARSD submitted to EPA on May 2, 1997. For the SIP revisions submitted to EPA on May 6, 1999, the State held a public hearing on February 18, 1999, after providing notice to the public.

IV. How Do I Know What NSPS Subparts Have Been Approved as Part of the SIP or Delegated by EPA to the States?

We publish a table in 40 CFR 60.4 for Region VIII States that identify which NSPS subparts have been adopted by the States and delegated and approved by EPA. In this document, we update that table to reflect the NSPS subparts delegated to South Dakota. We are also updating the address listed for the State of South Dakota in 40 CFR 60.4.

V. How Does Today's Action Affect Indian Country (18 U.S.C. 1151) in South Dakota?

South Dakota is not authorized to carry out its NSPS program in Indian country, as defined in 18 U.S.C. 1151. This includes, but is not limited to:

Lands within the exterior boundaries of the following Indian Reservations located within the State of South Dakota:

A. Cheyenne River Indian Reservation,
B. Crow Creek Indian Reservation,
C. Flandreau Indian Reservation,
D. Lower Brule Indian Reservation,
E. Pine Ridge Indian Reservation,
F. Rosebud Indian Reservation,
G. Standing Rock Indian Reservation, and
H. Yankton Indian Reservation.

EPA held a public hearing on December 2, 1999, in Badlands National Park, South Dakota, and accepted public comments on the question of the location and extent of Indian country within the State of South Dakota. EPA also received written comments on the question of the location and extent of Indian country pursuant to our September 21, 1999 notice of proposed approval of South Dakota's NSPS revisions. In a forthcoming **Federal Register** notice, EPA will respond to the comments that have been received and more specifically identify Indian country areas in the State of South Dakota.

VI. What Final Action on the South Dakota SIP Submittals Is EPA Taking Today?

We approve these revisions to South Dakota's NSPS in ARSD 74:36:07 because the revisions ensure that the State's NSPS are up to date with the Federal NSPS. However, our approval of these South Dakota SIP revisions does not extend to sources located in Indian Country, as defined in 18 U.S.C. 1151 and as further discussed in Section V. of this document.

VII. What Are the Administrative Requirements Associated With This Action?

Under Executive Order 12866 (58 FR 51735, October 4, 1993), this action is not a ''significant regulatory action'' and therefore is not subject to review by the Office of Management and Budget. This action merely approves state law as meeting federal requirements and imposes no additional requirements beyond those imposed by state law. Accordingly, the Administrator certifies that this rule will not have a significant economic impact on a substantial number of small entities under the Regulatory Flexibility Act (5 U.S.C. 601 *et seq.*). Because this rule approves pre-existing requirements under state law and does not impose any additional enforceable duty beyond that required by state law, it does not contain any unfunded mandate or significantly or uniquely affect small governments, as described in the Unfunded Mandates Reform Act of 1995 (Public Law 104–4). For the same reason, this rule also does not significantly or uniquely affect the communities of tribal governments, as specified by Executive Order 13084 (63 FR 27655, May 10, 1998). This rule will not have substantial direct effects on the States, on the relationship between the national government and the States, or on the distribution of power and responsibilities among the various levels of government, as specified in Executive Order 13132 (64 FR 43255, August 10, 1999), because it merely approves a state rule implementing a federal standard, and does not alter the relationship or the distribution of power and responsibilities established in the Clean Air Act. This rule also is not subject to Executive Order 13045 (62 FR 19885, April 23, 1997), because it is not economically significant.

In reviewing SIP submissions, EPA's role is to approve state choices, provided that they meet the criteria of the Clean Air Act. In this context, in the absence of a prior existing requirement for the State to use voluntary consensus standards (VCS), EPA has no authority to disapprove a SIP submission for failure to use VCS. It would thus be inconsistent with applicable law for EPA, when it reviews a SIP submission, to use VCS in place of a SIP submission that otherwise satisfies the provisions of the Clean Air Act. Thus, the requirements of section 12(d) of the National Technology Transfer and Advancement Act of 1995 (15 U.S.C. 272 note) do not apply. As required by section 3 of Executive Order 12988 (61 FR 4729, February 7, 1996), in issuing this rule, EPA has taken the necessary steps to eliminate drafting errors and ambiguity, minimize potential litigation, and provide a clear legal standard for affected conduct. EPA has complied with Executive Order 12630 (53 FR 8859, March 15, 1988) by examining the takings implications of the rule in accordance with the ''Attorney General's Supplemental Guidelines for the Evaluation of Risk and Avoidance of Unanticipated Takings'' issued under the executive order. This rule does not impose an information collection burden under the provisions of the Paperwork Reduction Act of 1995 (44 U.S.C. 3501 *et seq.*).

The Congressional Review Act, 5 U.S.C. section 801 *et seq.*, as added by the Small Business Regulatory Enforcement Fairness Act of 1996, generally provides that before a rule may take effect, the agency promulgating the rule must submit a rule report, which includes a copy of the rule, to each House of the Congress and to the Comptroller General of the United States. EPA will submit a report containing this rule and other required information to the U.S. Senate, the U.S. House of Representatives, and the Comptroller General of the United States prior to publication of the rule in the **Federal Register**. A major rule cannot take effect until 60 days after it is published in the **Federal Register**. This action is not a ''major rule'' as defined by 5 U.S.C. section 804(2). This rule will be effective June 21, 2000.

Under section 307(b)(1) of the Clean Air Act, petitions for judicial review of this action must be filed in the United States Court of Appeals for the appropriate circuit by July 21, 2000. Filing a petition for reconsideration by the Administrator of this final rule does not affect the finality of this rule for the purposes of judicial review nor does it extend the time within which a petition for judicial review may be filed, and shall not postpone the effectiveness of such rule or action. This action may not be challenged later in proceedings to enforce its requirements. (See section 307(b)(2).)

List of Subjects

40 CFR Part 52

Environmental protection, Air pollution control, Incorporation by reference, Intergovernmental relations, Particulate matter, Reporting and recordkeeping requirements, Sulfur oxides.

40 CFR Part 60

Air pollution control, Aluminum, ammonium sulfate plants, Beverages, Carbon monoxide, Cement industry, Coal, Copper, Drycleaners, Electric power plants, Fertilizers, Fluoride, Gasoline, Glass and glass products, Grains, Graphic arts industry, Household appliances, Insulation, Intergovernmental relations, Iron, Lead, Lime, Metallic and nonmetallic mineral processing plants, Metals, Motor vehicles, Natural gas, Nitric acid plants, Nitrogen dioxide, Paper and paper products industry, Particulate matter, Paving and roofing materials, Petroleum, Phosphate, Plastics materials and synthetics, Reporting and recordkeeping requirements, Sewage disposal, Steel, Sulfur oxides, Tires,

Urethane, Vinyl, Waste treatment and disposal, Wool, Zinc.

Dated: May 2, 2000.

Jack W. McGraw,

Acting Regional Administrator, Region 8.

Chapter I, title 40 of the Code of Federal Regulations is amended as follows:

PART 52—[AMENDED]

1. The authority citation for part 52 continues to read as follows:

Authority: 42 U.S.C. 7401 *et seq.*

Subpart QQ—South Dakota

2. Section 52.2170 is amended by adding paragraph (c)(18) to read as follows:

§ 52.2170 Identification of plan.

* * * * *

(c) * * *

(18) On May 2, 1997 and on May 6, 1999, the designee of the Governor of South Dakota submitted revisions to the new source performance standards in subchapter 74:36:07 of the Administrative Rules of South Dakota (ARSD).

(i) Incorporation by reference.

(A) Revisions to the Administrative Rules of South Dakota, Air Pollution Control Program, Chapter 74:36:07—New Source Performance Standards, subsections 74:36:07:01 through 74:36:07:10, 74:36:07:12 through 74:36:07:28, 74:36:07:31 through 74:36:07:33, and 74:36:07:43, effective December 29, 1996.

(B) Revisions to the Administrative Rules of South Dakota, Air Pollution Control Program, Chapter 74:36:07—New Source Performance Standards, subsections 74:36:07:06.02, 74:36:07:07.01, 74:36:07:11, and 74:36:07:43, effective April 4, 1999.

* * * * *

PART 60—[AMENDED]

1. The authority citation for part 60 continues to read as follows:

Authority: 42 U.S.C. 7401–7601.

Subpart A—General Provisions

2. Section 60.4 is amended by:

a. Revising the address listed for the State of South Dakota in paragraph (b)(QQ); and

b. In the table in paragraph (c) entitled ''Delegation Status of New Source Performance Standards [(NSPS) for Region VIII]'' by revising the entries for ''Eb—Large Municipal Waste Combustors,'' ''Ec—Hospital/Medical/Infectious Waste Incinerators,'' ''UUU—Calciners and Dryers in Mineral Industries,'' and ''WWW—Municipal Solid Waste Landfills'; and removing the existing entry for ''RRR—VOC Emissions from Synthetic Organic Chemical Manufacturing Industry (SOCMI) Reactor Process''and adding a new entry for ''RRR—VOC Emissions from Synthetic Organic Chemical Manufacturing Industry (SOCMI) Reactor Processes'' to read as follows:

§ 60.4 Address.

* * * * *

(b) * * *

(QQ) State of South Dakota, Air Quality Program, Department of Environment and Natural Resources, Joe Foss Building, 523 East Capitol, Pierre, SD 57501–3181.

* * * * *

(c) * * *

DELEGATION STATUS OF NEW SOURCE PERFORMANCE STANDARDS

[(NSPS) for Region VIII]

Subpart	CO	MT [1]	ND	SD [1]	UT [1]	WY
* * *		*		*		
Eb—Large Municipal Waste Combustors	.....	.....	.....	(*)	.....	(*)
Ec—Hospital/Medical/Infectious Waste Incinerators	.....	.....	(*)	(*)	.....	.....
* * *		*		*		
RRR—VOC Emissions from Synthetic Organic Chemical Manufacturing Industry (SOCMI) Reactor Processes	(*)	.....	(*)	(*)	(*)	(*)
* * *		*		*		
UUU—Calciners and Dryers in Mineral Industries	(*)	.....	(*)	(*)	(*)	(*)
* * *		*	*		*	
WWW—Municipal Solid Waste Landfills	.....	.....	(*)	(*)	(*)	(*)

(*) Indicates approval of State regulation.

[1] Indicates approval of New Source Performance Standards as part of the State Implementation Plan (SIP).

[FR Doc. 00–12522 Filed 5–19–00; 8:45 am]

BILLING CODE 6560–50–U

ENVIRONMENTAL PROTECTION AGENCY

40 CFR Part 70

[FRL–6703–3]

RIN 2060–AJ12

Extension of Operating Permits Program, Interim Approval Expiration Dates

AGENCY: Environmental Protection Agency (EPA).

ACTION: Final rule.

SUMMARY: This action amends the operating permits regulations of EPA. Those regulations were originally promulgated on July 21, 1992. These amendments will extend up to December 1, 2001 all operating permits program interim approvals. This action will allow the time needed for permitting authorities to correct all remaining interim approval deficiencies and obtain full approval for their operating permits programs.

DATES: The regulatory amendments announced herein take effect on May 31, 2000. For those programs whose interim

approval expiration dates are amended by this action, interim approval will expire on December 1, 2001. Any program revisions necessary for a program to obtain full approval must be submitted to EPA not later than June 1, 2001.

ADDRESSES: *Docket.* Supporting material used in developing the proposal and final regulatory revisions is contained in Docket Number A–93–50. This docket is available for public inspection and copying between 8:30 a.m. and 5:30 p.m., Monday through Friday. The address of the EPA air docket is: Air and Radiation Docket and Information Center (6102), Attention Docket Number A–93–50, U.S. Environmental Protection Agency, 401 M Street, SW, Washington, DC 20460. The Docket is located in Room M–1500, Waterside Mall (ground floor). The telephone number for the EPA air docket is (202) 260–7548. A reasonable fee may be charged for copying.

FOR FURTHER INFORMATION CONTACT: Roger Powell, Mail Drop 12, United States Environmental Protection Agency, Research Triangle Park, North Carolina 27711 (telephone 919–541–5331, e-mail: powell.roger@epa.gov).

SUPPLEMENTARY INFORMATION: On February 14, 2000, EPA published in the **Federal Register** a direct final rulemaking which would have extended until June 1, 2002, expiration dates for all State and local operating permits programs that have interim approvals (65 FR 7290) granted by EPA under its regulations at 40 CFR part 70 (part 70). A proposal to that effect was published the same day (65 FR 7333). In the rulemaking, EPA stated that if relevant adverse comments were received by the comment deadline specified in that action, March 15, 2000, EPA would publish a document informing the public that the rule would not take effect and that comments would be addressed in any final rule based on the proposed rule.

The EPA did receive an adverse comment on the direct final rulemaking within the comment deadline. Accordingly, EPA published a **Federal Register** document on March 29, 2000 withdrawing the rulemaking (65 FR 16523). This rulemaking represents the final rule based on the February 14, 2000 proposal, to which the adverse comment also applied. The comments on the proposal are addressed herein.

I. Background

If an operating permits program administered by a State or local permitting authority under title V of the Clean Air Act (Act) does not fully meet, but does ''substantially [meet],'' the requirements of part 70, EPA may grant that program ''interim approval.'' Permits granted under an interim approval are fully effective and expire at the end of their fixed term, unless renewed under a part 70 program. See 40 CFR 70.4(d)(2). Many State and local permitting programs have been granted interim approval, with most final interim approval actions having occurred in 1995 and 1996. See 40 CFR part 70, Appendix A. To obtain full approval, a permitting authority must submit to EPA program revisions to correct all deficiencies that caused the operating permits program to receive interim approval. Such submittal must be made no later than 6 months prior to the expiration of the interim approval. See 40 CFR 70.4(f)(2).

On August 29, 1994 (59 FR 44460) and August 31, 1995 (60 FR 45530), EPA proposed revisions to its part 70 operating permits program regulations. Primarily, the proposals addressed changes to the system for revising permits, but a number of other proposed changes were also included. The preamble to the August 31, 1995 proposal noted the concern of many permitting authorities over having to revise their operating permits programs twice; once to correct interim approval deficiencies, and again to address the revisions to part 70. In the August 1995 preamble, the Agency proposed that States with interim approval ''* * * should be allowed to delay the submittal of any program revisions to address program deficiencies previously listed in their notice of interim approval until the deadline to submit other changes required by the proposed revisions to part 70'' (60 FR 45552).

On October 31, 1996 (61 FR 56368), EPA amended 40 CFR 70.4(d)(2) to permit the Administrator to grant extensions to interim approval expiration dates to allow permitting authorities the opportunity to combine program revisions directed at the correction of interim approval deficiencies as well as the adoption of the part 70 revisions. In this rulemaking, all interim approvals granted prior to the date of issuance of a memorandum announcing EPA's position on this issue (memorandum from Lydia N. Wegman to Regional Division Directors, ''Extension of Interim Approvals of Operating Permits Programs,'' June 13, 1996) were granted 10 month extensions from their different respective expiration dates.

The EPA then extended interim approval expiration dates for certain State and local permitting programs a second time, on August 29, 1997 (62 FR 45732). On July 27, 1998, EPA published a direct final rulemaking extending interim approval expiration dates a third time, this time covering all interim approved programs, until June 1, 2000. In each of these instances, delays in the expected promulgation of the final part 70 revisions past the previous interim approval expiration dates led EPA to grant the further extensions of the expiration deadlines. The Agency intended these extensions to provide State and local agencies time to apply to combine their program revisions and to allow EPA to take action on those requests.

Following discussions with various stakeholders and further deliberations concerning the revisions to the part 70 regulations, EPA is in the process of preparing a supplemental proposal to take comment on a series of possible part 70 revisions that arose out of those discussions and deliberations. The Agency anticipates publishing this supplemental proposal in the **Federal Register** in late summer or early fall of 2000. The EPA now projects promulgation of the entire final package of part 70 revisions for late 2001.

To prevent interim approvals from expiring on June 1, 2000, and to enable permitting authorities to defer correction of interim approval deficiencies until their adoption of the expected part 70 revisions, EPA published a direct final rule on February 14, 2000 to extend all interim approval expiration dates until June 1, 2002 (65 FR 7290). Simultaneously, EPA published an accompanying proposal, also to extend interim approval expiration dates until June 1, 2002 (65 FR 7333).

II. Comments Received on the Proposal

The comment period for the February 14, 2000 proposal expired on March 15, 2000. During the comment period, EPA received two comment letters addressing that proposal.

The first commenter apparently misunderstood the mechanisms for allowing permitting authorities to combine program revisions. The comment addressed the fact that an interim approval expiration date of June 1, 2002 did not allow enough time to prepare program changes to address the expected revisions to part 70, which was projected for promulgation in late 2001.

The preamble of the direct final rulemaking on February 14, 2000 explained that after part 70 was revised, another interim approval expiration date extension of either 18 months or 2 years from the date of rulemaking revising part 70 would be available to

allow time for preparation of the combined program revisions. The Agency intended the interim approval expiration date extension until June 1, 2002 to be a measure to prevent interim approvals from expiring on June 1, 2000, before the part 70 revisions were promulgated. The commenter's concern, therefore, would have been addressed by the provisions explained in the February 2000 direct final rulemaking.

Prior extensions and the June 13, 1996 memorandum referenced above have been predicated upon the understanding that permitting authorities wishing to combine program revisions to meet the revised part 70 with program revisions to correct remaining interim approval deficiencies, were to request, within 30 days of promulgation of the part 70 revisions, an additional 18 month or 2 year extension of their interim approval deadline (65 FR 7291–7292). Accordingly, neither the direct final rule nor the proposal was intended to grant across-the-board extensions to interim approval deadlines sufficiently past the expected promulgation date of the part 70 revisions to allow the full cycle of State and local program revisions, submissions, and EPA approvals to occur.

The second commenter asserted that EPA's proposed action is contrary to the express terms of the Act and must be withdrawn. The commenter referred to Section 502(g) of the Act, which provides that ''[a]n interim approval under [Section 502(g)] shall expire on a date set by the Administrator not later than 2 years after such approval, and may not be renewed.''

This commenter further argued that the existing 40 CFR 70.4(d)(2) does not justify an extension of interim approval deadlines until June 1, 2002. The commenter stated that to the extent that § 70.4(d)(2) allowed an extension of interim approvals by up to 10 months on an individual basis, EPA had already granted this 10-month extension in the October 31, 1996 rulemaking and that, at any rate, the proposed extension to June 1, 2002 was longer than 10 months.

This commenter also asserted that to the extent § 70.4(d)(2) allowed longer interim approval periods for States to combine program changes, this provision did not justify the proposed extension to June 1, 2002 because § 70.4(d)(2) contemplated such extensions only after the promulgation of part 70 revisions, which has not occurred. Moreover, the commenter noted that this provision authorized additional time ''only once per State'' and that EPA had already granted multiple extensions in the past.

Finally, the commenter argued that the continuing extension of interim approvals does not represent sound policy. That commenter stated that the deficiencies in State programs that warranted EPA granting interim, rather than full, approval often involved important substantive issues. Moreover, the commenter argued that no real hardship would be suffered by States required to undertake more than one program revision, noting that States regularly revise their regulations and statutes as part of the State implementation plan process. Finally, the commenter argued that any pursuit of administrative convenience could not override statutory requirements and the purpose of the permit program.

In consideration of these comments, and taking into account the further delays in promulgating the revisions to part 70 and the need for a supplemental part 70 proposal, EPA is abandoning the concept of allowing program revisions to correct interim approval deficiencies to be combined with program revisions necessary to conform to the provisions of expected future revisions to part 70. The Agency concludes that it is no longer appropriate to continue extending interim approval expiration dates in furtherance of this combination approach.

Notwithstanding the repeated extensions of interim approvals, EPA has, in the preambles to those previous extensions, consistently encouraged permitting authorities to correct their remaining interim approval deficiencies and not await promulgation of the part 70 revisions. Indeed, a number of State and local permitting authorities have corrected their deficiencies and have either received full approval or submitted corrections to EPA to gain full approval. Most permitting authorities with interim approved programs, however, have not corrected all remaining deficiencies.

The EPA also is aware of programs that have undertaken rulemakings during their interim approval period to correct some but not all outstanding deficiencies, with some deficiencies remaining that are unrelated to the expected part 70 revisions. Moreover, further inquiry has demonstrated that the significant majority of remaining interim approval deficiencies are unrelated to the issues addressed by the revisions proposed to part 70, with most deficiencies not being altered or affected by expected revisions to part 70. Accordingly, EPA believes it is appropriate to require correction of all interim approval deficiencies without regard to the possible future promulgation of the part 70 revisions.

At the same time, for State and local programs to have the opportunity to correct all interim approval deficiencies, and to provide EPA the opportunity to act on these submittals, this rulemaking extends the interim approval expiration deadline until December 1, 2001. Under part 70, State and local permitting authorities must submit corrections of all remaining interim approval deficiencies by no later than 6 months prior to this deadline, namely by no later than June 1, 2001, for EPA to treat these submissions as timely.

The Agency believes it is necessary to extend interim approval expiration deadlines until December 1, 2001 both to ensure that permitting authorities have the opportunity to correct remaining deficiencies, and to ensure that title V permit programs continue to be implemented effectively by State and local permitting authorities. The Agency believes that State and local agencies are well equipped to continue effective administration and enforcement of operating permits programs, and to ensure the issuance of permits designed to serve the important compliance benefits of the Act.

In the absence of the extension granted in this rulemaking, interim approved programs would expire on June 1, 2000, automatically placing into effect the part 71 Federal operating permits program for 88 State and local permitting authorities. This outcome would only hinder the effort to issue operating permits and bring about the important benefits of permits, since sources without already issued part 70 permits in those jurisdictions newly subject to the part 71 Federal operating permits program would need to re-apply for part 71 permits within 1 year after the June 1, 2000 effective date. Consequently, those sources would not be issued operating permits until well after the time they would have been under a preserved part 70 program.

Finally, EPA is well aware that many permitting authorities with interim approved programs have not undertaken program revisions to correct their remaining deficiencies under the expectation that an extension past the June 1, 2000 deadline would be granted to allow the opportunity to combine their program revisions as previously discussed. Accordingly, today's action prevents the disruption that would occur from imposing the Federal permitting program on affected State and local agencies on relatively short notice. At the same time, EPA is hereby providing clear notice that to avoid having their programs expire and be replaced by the Federal permitting program, permitting authorities must

correct all remaining deficiencies and submit those corrections by the deadlines discussed above, with further notice that no additional extensions of interim approval deadlines will be granted. The EPA believes that all permitting authorities with currently identified interim approval deficiencies will be able to make any necessary revisions to their rules or statutes, and to submit any needed corrections, by no later than June 1, 2002.

III. Effective Date

Section 553(d) of the Administrative Procedure Act (5 U.S.C.A., 551–59, 701–06) requires that EPA allow at least 30 days from the publication of a substantive rule before it becomes effective unless EPA determines there is good cause for a shorter deadline. The primary purpose of the delayed effective date is to give citizens a reasonable time to prepare to comply with, or take other action regarding, a rule. The Agency has determined that good cause exists for making this rulemaking effective on May 31, 2000 since delaying the effective date of the rulemaking would be impracticable and contrary to the public interest, and lead to serious dislocation in government programs.

The compelling argument for making this rulemaking effective on May 31, 2000 is that it must take effect before June 1, 2000 or it will fail to fulfill its intended function to prevent interim approval programs from expiring and being replaced by the Federal permitting program. On June 1, 2000, all interim approvals will expire and cannot be re-established after that date. As discussed above, expiration of State and local interim approved programs would frustrate the ongoing implementation of the title V permits program by permitting authorities and be contrary to the public interest. It would also force currently un-permitted sources to resubmit permit applications at the Federal level, even though they would have otherwise soon obtained State-issued permits. In light of the scale of such a disruption to State programs, it would be impracticable for EPA to be able to undertake substitute permitting responsibilities on such an expeditious basis to make up for the lost time. Finally, having to assume permitting responsibilities would also divert EPA resources from efforts to assist State and local agencies in correcting their programs, and from EPA's recent commencement of the Federal permitting program for sources located in Indian country.

IV. Administrative Requirements

A. Docket

The docket for this regulatory action is A–93–50. The docket is an organized and complete file of all the information submitted to, or otherwise considered by, EPA in the development of this rulemaking. The principal purposes of the docket are: (1) To allow interested parties a means to identify and locate documents so that the parties can effectively participate in the rulemaking process and (2) to serve as the record in case of judicial review (except for interagency review materials). The docket is available for public inspection at EPA's Air Docket, which is listed under the **ADDRESSES** section of this document.

B. Executive Order 12866

Under Executive Order 12866 (58 FR 51735, October 4, 1993), the Agency must determine whether each regulatory action is ''significant,'' and therefore subject to the Office of Management and Budget (OMB) review and the requirements of the Order. The Order defines ''significant'' regulatory action as one that is likely to lead to a rule that may:

1. Have an annual effect on the economy of $100 million or more, adversely and materially affecting a sector of the economy, productivity, competition, jobs, the environment, public health or safety, or State, local, or tribal governments or communities.
2. Create a serious inconsistency or otherwise interfere with an action taken or planned by another agency.
3. Materially alter the budgetary impact of entitlements, grants, user fees, or loan programs or the rights and obligation of recipients thereof.
4. Raise novel legal or policy issues arising out of legal mandates, the President's priorities, or the principles set forth in Executive Order 12866.

Pursuant to the terms of Executive Order 12866, it has been determined that this action is not a ''significant'' regulatory action because it does not substantially change the existing part 70 requirements for States or sources; requirements which have already undergone OMB review. Rather than impose any new requirements, this action only extends an existing deferral of those requirements. As such, this action is exempted from OMB review.

C. Regulatory Flexibility Act Compliance

Pursuant to section 605(b) of the Regulatory Flexibility Act, 5 U.S.C. 605(b), I certify that this action will not have a significant economic impact on a substantial number of small entities. In developing the original part 70 regulations, the Agency determined that they would not have a significant economic impact on a substantial number of small entities. Similarly, the same conclusion was reached in an initial regulatory flexibility analysis performed in support of the proposed part 70 revisions (a subset of which constitutes the action in this rulemaking). This action does not substantially alter the part 70 regulations as they pertain to small entities and accordingly will not have a significant economic impact on a substantial number of small entities. Rather, it leaves existing State and local permitting programs in place, whereas absence of EPA action would cause them to expire and be replaced by a new Federal permitting program.

D. Paperwork Reduction Act

The OMB has approved the information collection requirements contained in part 70 under the provisions of the Paperwork Reduction Act, 44 U.S.C. 3501 *et seq.* and has assigned OMB control number 2060–0243. The Information Collection Request (ICR) prepared for part 70 is not affected by the action in this rulemaking notice because the part 70 ICR determined burden on a nationwide basis, assuming all part 70 sources were included without regard to the approval status of individual programs. The action in this rulemaking notice, which simply provides for an extension of the interim approval of certain programs, does not alter the assumptions of the approved part 70 ICR used in determining the burden estimate. Furthermore, this action does not impose any additional requirements which would add to the information collection requirements for sources or permitting authorities.

E. Unfunded Mandates Reform Act.

Title II of the Unfunded Mandates Reform Act of 1995 (UMRA), Public Law 104–4, establishes requirements for Federal agencies to assess the effects of their regulatory actions on State, local, and tribal governments and the private sector. Under section 202 of the UMRA, EPA generally must prepare a written statement, including a cost-benefit analysis, for proposed and final rules with Federal mandates that may result in expenditures to State, local, and tribal governments, in the aggregate, or to the private sector, of $100 million or more in any one year. Before promulgating an EPA rule for which a written statement is needed, section 205 of the UMRA generally requires EPA to

identify and consider a reasonable number of regulatory alternatives and adopt the least costly, most cost-effective or least burdensome alternative that achieves the objectives of the rule. The provisions of section 205 do not apply when they are inconsistent with applicable law. Moreover, section 205 allows EPA to adopt an alternative other than the least costly, most cost-effective or least burdensome alternative if the Administrator publishes with the final rule an explanation why that alternative was not adopted. Before EPA establishes any regulatory requirements that may significantly or uniquely affect small governments, including tribal governments, it must have developed under section 203 of the UMRA a small government agency plan. The plan must provide for notifying potentially affected small governments, enabling officials of affected small governments to have meaningful and timely input in the development of EPA regulatory proposals with significant Federal intergovernmental mandates, and informing, educating, and advising small governments on compliance with the regulatory requirements.

The EPA has determined that the action in this rulemaking does not contain a Federal mandate that may result in expenditures of $100 million or more for State, local, and tribal governments, in the aggregate, or the private sector, in any one year. Although the part 70 regulations governing State operating permit programs impose significant Federal mandates, this action does not amend the part 70 regulations in a way that significantly alters the expenditures resulting from these mandates. Therefore, the Agency concludes that it is not required by section 202 of the UMRA of 1995 to provide a written statement to accompany this regulatory action.

F. Submission to Congress and the General Accounting Office

The Congressional Review Act, 5 U.S.C. 801 *et seq.*, as added by the Small Business Regulatory Enforcement Fairness Act of 1996, generally provides that before a rule may take effect, the agency promulgating the rule must submit a rule report, which includes a copy of the rule, to each House of the Congress and to the Comptroller General of the United States. The EPA will submit a report containing this rule and other required information to the U.S. Senate, the U.S. House of Representatives, and the Comptroller General of the United States prior to publication of the rule in the **Federal Register**. This rule is not a ''major rule'' as defined by 5 U.S.C. 804(2).

G. Applicability of Executive Order 13045

Executive Order 13045, ''Protection of Children from Environmental Health Risks and Safety Risks'' (62 FR 19885, April 23, 1977), applies to any rule that EPA determines (1) Is ''economically significant'' as defined under Executive Order 12866, and (2) concerns an environmental health or safety risk that EPA has reason to believe may have a disproportionate effect on children. If the regulatory action meets both criteria, the Agency must evaluate the environmental health or safety effects of the planned rule on children and explain why the planned regulation is preferable to other potentially effective and reasonably feasible alternatives considered by the Agency.

This final rule is not subject to Executive Order 13045 because it is not an economically significant regulatory action as defined by Executive Order 12866, and it does not address an environmental health or safety risk that would have a disproportionate effect on children.

H. Executive Order 13132 (Federalism)

Executive Order 13132, entitled ''Federalism'' (64 FR 43255, August 10, 1999), requires EPA to develop an accountable process to ensure ''meaningful and timely input by State and local officials in the development of regulatory policies that have federalism implications.'' ''Policies that have federalism implications'' is defined in the Executive Order to include regulations that have ''substantial direct effects on the States, on the relationship between the national government and the States, or on the distribution of power and responsibilities among the various levels of government.'' Under Executive Order 13132, EPA may not issue a regulation that has federalism implications, that imposes substantial direct compliance costs, and that is not required by statute, unless the Federal government provides the funds necessary to pay the direct compliance costs incurred by State and local governments, or EPA consults with State and local officials early in the process of developing the proposed regulation. EPA also may not issue a regulation that has federalism implications and that preempts State law unless the Agency consults with State and local officials early in the process of developing the proposed regulation.

If EPA complies by consulting, Executive Order 13132 requires EPA to provide to OMB, in a separately identified section of the preamble to the rule, a federalism summary impact statement (FSIS). The FSIS must include a description of the extent of EPA's prior consultation with State and local officials, a summary of the nature of their concerns and the agency's position supporting the need to issue the regulation, and a statement of the extent to which the concerns of State and local officials have been met. Also, when EPA transmits a draft final rule with federalism implications to OMB for review pursuant to Executive Order 12866, EPA must include a certification from the agency's Federalism Official stating that EPA has met the requirements of Executive Order 13132 in a meaningful and timely manner.

This rule change will not have substantial direct effects on the States, on the relationship between the national government and the States, or on the distribution of power and responsibilities among the various levels of government, as specified in Executive Order 13132. This rule change will not create new requirements but will only extend an existing deferral to allow permitting authorities to more efficiently revise their operating permits programs. Thus, the requirements of section 6 of the Executive Order do not apply to this rule.

I. Executive Order 13084: Consultation and Coordination with Indian Tribal Governments

Under Executive Order 13084, EPA may not issue a regulation that is not required by statute, that significantly or uniquely affects the communities of Indian tribal governments, and that imposes substantial direct compliance costs on those communities, unless the Federal government provides the funds necessary to pay the direct compliance costs incurred by the tribal governments, or EPA consults with those governments. If EPA complies by consulting, Executive Order 13084 requires EPA to provide to OMB, in a separately identified section of the preamble to the rule, a description of the extent of EPA's prior consultation with representatives of affected tribal governments, a summary of the nature of their concerns, and a statement supporting the need to issue the regulation. In addition, Executive Order 13084 requires EPA to develop an effective process permitting elected officials and other representatives of Indian tribal governments ''to provide meaningful and timely input in the development of regulatory policies on matters that significantly or uniquely affect their communities.''

This rule does not significantly or uniquely affect the communities of Indian tribal governments because it applies only to State and local permitting programs. Accordingly, the requirements of section 3(b) of Executive Order 13084 do not apply to this rule.

J. National Technology Transfer and Advancement Act

Section 12(d) of the National Technology Transfer and Advancement Act (NTTAA), Public Law 104–113, section 12(d) (15 U.S.C. 272 note) directs EPA to use voluntary consensus standards in its regulatory activities unless to do so would be inconsistent with applicable law or otherwise impractical. Voluntary consensus standards are technical standards (*e.g.,* materials specifications, test methods, sampling procedures, and business practices) that are developed or adopted by one or more voluntary consensus standard bodies. The NTTAA directs EPA to provide Congress, through OMB, explanations when the Agency decides not to use available and applicable voluntary consensus standards.

This rule does not involve technical standards. Therefore, EPA is not considering the use of any voluntary consensus standards.

List of Subjects in 40 CFR Part 70

Environmental protection, Air pollution control, Operating permits.

Dated: May 12, 2000.

Carol M. Browner,

Administrator.

For the reasons set out in the preamble, title 40, chapter I, of the Code of Federal Regulations is amended as set forth below.

PART 70—[AMENDED]

1. The authority citation for part 70 continues to read as follows:

Authority: 42 U.S.C. 7401, *et seq.*

2. Appendix A of part 70 is amended by the following:

a. Revising the date at the end of the third sentence in paragraph (a) under Texas to read ''December 1, 2001''; and

b. Revising the date at the end of the following paragraphs to read ''December 1, 2001'': Paragraph (a) under Alaska, Arkansas, Colorado, Connecticut, Delaware, District of Columbia, Florida, Georgia, Hawaii, Idaho, Illinois, Indiana, Kentucky, Maine, Maryland, Massachusetts, Michigan, Minnesota, Montana, New Hampshire, New Jersey, New York, North Carolina, Oklahoma, Rhode Island, Vermont, Virgin Islands, Virginia, West Virginia, and Wisconsin; paragraphs (a), (b), and (c) under Alabama and Nevada; paragraphs (a), (b), (c)(1), (c)(2), (d)(1), and (d)(2) under Arizona; paragraphs (a) through (hh) under California; paragraphs (a) and (e) under Tennessee; and paragraphs (a) through (i) under Washington.

[FR Doc. 00–12789 Filed 5–19–00; 8:45 am]

BILLING CODE 6560–50–P

DEPARTMENT OF DEFENSE

48 CFR Part 235

[DFARS Case 200–D401]

Defense Federal Acquisition Regulation Supplement; Research, Development, Test, and Evaluation Budget Category Definitions

AGENCY: Department of Defense (DoD).

ACTION: Final rule.

SUMMARY: The Acting Director of Defense Procurement has issued a final rule amending the Defense Federal Acquisition Regulation Supplement (DFARS) to remove obsolete definitions pertaining to research and development efforts. The rule replaces the obsolete definitions with a reference to the current definitions pertaining to research and development found in the DoD Financial Management Regulation.

EFFECTIVE DATE: May 22, 2000.

FOR FURTHER INFORMATION CONTACT: Ms. Susan Schneider, Defense Acquisition Regulations Council, PDUSD(AT&L)DP(DAR), IMD 3D139, 3062 Defense Pentagon, Washington, DC 20301–3062. Telephone (703) 602–0326; telefax (703) 602–0350. Please cite DFARS Case 2000–D401.

SUPPLEMENTARY INFORMATION:

A. Background

This final rule revises DFARS 235.001 to remove obsolete definitions pertaining to research and development and to replace the definitions with a reference to those in the DoD Financial Management Regulation (DoD 7000.14–R).

This rule was not subject to Office of Management and Budget review under Executive Order 12866, dated September 30, 1993.

B. Regulatory Flexibility Act

This final rule does not constitute a significant revision within the meaning of FAR 1.501 and Public Law 98–577 and publication for public comment is not required. However, DoD will consider comments from small entities concerning the affected DFARS subpart in accordance with 5 U.S.C. 610. Such comments should cite DFARS Case 2000–D401.

C. Paperwork Reduction Act

The Paperwork Reduction Act does not apply because the rule does not impose any information collection requirements that require the approval of the Office of Management and Budget under 44 U.S.C. 3501, *et seq.*

List of Subjects in 48 CFR Part 235

Government procurement.

Michele P. Peterson,

Executive Editor, Defense Acquisition Regulations Council.

Therefore, 48 CFR Part 235 is amended as follows:

1. The authority citation for 48 CFR Part 235 continues to read as follows:

Authority: 41 U.S.C. 421 and 48 CFR Chapter 1.

PART 235—RESEARCH AND DEVELOPMENT CONTRACTING

2. Section 235.001 is revised to read as follows:

235.001 Definitions.

''Research and development'' means those efforts described by the Research, Development, Test, and Evaluation (RDT&E) budget activity definitions found in the DoD Financial Management Regulation (DoD 7000.14–R), Volume 2B, Chapter 5.

[FR Doc. 00–12417 Filed 5–19–00; 8:45 am]

BILLING CODE 5000–04–M

DEPARTMENT OF DEFENSE

48 CFR Part 241

[DFARS Case 99–D309]

Defense Federal Acquisition Regulation Supplement; Authority Relating to Utility Privatization

AGENCY: Department of Defense (DoD).

ACTION: Final rule.

SUMMARY: The Acting Director of Defense Procurement is adopting as final, without change, an interim rule amending the Defense Federal Acquisition Regulation Supplement (DFARS) to implement Section 2812 of the National Defense Authorization Act for Fiscal Year 2000. Section 2812 provides that DoD may enter into utility service contracts related to the conveyance of a utility system for periods not to exceed 50 years.

EFFECTIVE DATE: May 22, 2000.

FOR FURTHER INFORMATION CONTACT: Ms. Melissa Rider, Defense Acquisition

Regulations Council, PDUSD (AT&L) DP (DAR), IMD 3D139, 3062 Defense Pentagon, Washington, DC 20301–3062. Telephone (703) 602–4245; telefax (703) 602–0350. Please cite DFARS Case 99–D309.

SUPPLEMENTARY INFORMATION:

A. Background

DoD published an interim rule at 65 FR 2058 on January 13, 2000. The rule added a new section at DFARS 241.103 to implement Section 2812 of the National Defense Authorization Act for Fiscal Year 2000 (Public Law 106–65). Section 2812 amended 10 U.S.C. 2688 to provide authority for DoD to enter into utility service contracts related to the conveyance of a utility system for periods not to exceed 50 years. DoD received no public comments on the interim rule. The interim rule is converted to a final rule without change.

This rule was not subject to Office of Management and Budget review under Executive Order 12866, dated September 30, 1993.

B. Regulatory Flexibility Act

DoD certifies that this final rule will not have a significant economic impact on a substantial number of small entities within the meaning of the Regulatory Flexibility Act, 5 U.S.C. 601, *et seq.,* because utility services generally are not provided by small business concerns.

C. Paperwork Reduction Act

The Paperwork Reduction Act does not apply because the rule does not impose any information collection requirements that require the approval of the Office of Management and Budget under 44 U.S.C. 3501, *et seq.*

List of Subjects in 48 CFR Part 241

Government procurement.

Michele P. Peterson,

Executive Editor, Defense Acquisition Regulations Council.

Interim Rule Adopted as Final Without Change

Accordingly, the interim rule amending 48 CFR part 241, which was published at 65 FR 2058 on January 13, 2000, is adopted as a final rule without change.

[FR Doc. 00–12418 Filed 5–19–00; 8:45 am]

BILLING CODE 5000–04–M

DEPARTMENT OF DEFENSE

48 CFR Part 252

[DFARS Case 2000–D007]

Defense Federal Acquisition Regulation Supplement; OMB Circular A–73, Audit of Federal Operations and Programs

AGENCY: Department of Defense (DoD).

ACTION: Final rule.

SUMMARY: The Acting Director of Defense Procurement has issued a final rule amending the Defense Federal Acquisition Regulation Supplement (DFARS) to remove the requirement for contractors to comply with Office of Management and Budget (OMB) Circular No. A–73 when performing audit services for DoD. OMB rescinded Circular No. A–73 on May 22, 1995.

EFFECTIVE DATE: May 22, 2000.

FOR FURTHER INFORMATION CONTACT: Ms. Sandra Haberlin, Defense Acquisition Regulations Council, PDUSD (AT&L) DP (DAR), IMD 3D139, 3062 Defense Pentagon, Washington, DC 20301–3062. Telephone (703) 602–0289; telefax (703) 602–0350. Please cite DFARS Case 2000–D007.

SUPPLEMENTARY INFORMATION:

A. Background

On March 7, 1995, OMB published a notice of proposed rescission of OMB Circular No. A–73, Audit of Federal Operations and Programs (60 FR 12581). The circular contained audit practices and extended the application of certain principles of the Inspector General Act of 1978 (Public Law 100–504) (IG Act) to Federal agencies not covered by the IG Act. The March 7, 1995 notice stated that the circular was unnecessary. The audit practices in the circular had become common practices throughout the Federal Government, and the IG Act had been expanded in 1988 to cover almost all Federal entities of significant size. The notice further stated that the rescission would take place on May 22, 1995, unless OMB received comments that raised significant concerns regarding the proposed rescission. OMB rescinded the circular on May 22, 1995.

Therefore, this final rule revises the clause at DFARS 252.237–7001, Compliance with Audit Standards, to remove the requirement for contractors performing audit services to comply with OMB Circular No. A–73.

This rule was not subject to OMB review under Executive Order 12866, dated September 30, 1993.

B. Regulatory Flexibility Act

This final rule does not constitute a significant revision within the meaning of FAR 1.501 and Public Law 98–577 and publication for public comment is not required. However, DoD will consider comments from small entities concerning the affected DFARS subpart in accordance with 5 U.S.C. 610. Such comments should cite DFARS Case 2000–D007.

C. Paperwork Reduction Act

The Paperwork Reduction Act does not apply because the rule does not impose any information collection requirements that require the approval of the Office of Management and Budget under 44 U.S.C. 3501, *et seq.*

List of Subjects in 48 CFR Part 252

Government procurement.

Michele P. Peterson,

Executive Editor, Defense Acquisition Regulations Council.

Therefore, 48 CFR Part 252 is amended as follows:

1. The authority citation for 48 CFR Part 252 continues to read as follows:

Authority: 41 U.S.C. 421 and 48 CFR Chapter 1.)

PART 252—SOLICITATION PROVISIONS AND CONTRACT CLAUSES

2. Section 252.237–7001 is revised to read as follows:

252.237–7001 Compliance with audit standards.

As prescribed in 237.270(d)(2), use the following clause:

Compliance With Audit Standards (May 2000)

The Contractor, in performance of all audit services under this contract, shall comply with ''Government Auditing Standards'' issued by the Comptroller General of the United States.

(End of clause)

[FR Doc. 00–12419 Filed 5–19–00; 8:45 am]

BILLING CODE 5000–04–M

DEPARTMENT OF COMMERCE

National Oceanic and Atmospheric Administration

50 CFR Part 648

[Docket No. 991228355–0140–02; I.D. 110999C]

RIN 0648–AM50

Fisheries of the Northeastern United States; Final 2000 Fishing Quotas for Atlantic Surf Clams, Ocean Quahogs, and Maine Mahogany Quahogs

AGENCY: National Marine Fisheries Service (NMFS), National Oceanic and Atmospheric Administration (NOAA), Commerce.

ACTION: Final 2000 fishing quotas for Atlantic surf clams, ocean quahogs, and Maine mahogany quahogs.

SUMMARY: NMFS issues these final quotas for the Atlantic surf clam, ocean quahog, and Maine mahogany quahog fisheries for the 2000 fisheries. This action is necessary to comply with the regulations governing these fisheries that require NMFS to publish annual quotas for each species for each fishing year. The intent of this action is to specify allowable harvest levels of Atlantic surf clams and ocean quahogs from the exclusive economic zone and an allowable harvest level of Maine mahogany quahogs from the waters north of 43°50′N. latitude for the fishing year 2000.

DATES: Effective May 22, 2000 through December 31, 2000.

ADDRESSES: Copies of supporting documents including the Environmental Assessment, Regulatory Impact Review, Initial Regulatory Flexibility Analysis (EA/RIR/IRFA), and the Essential Fish Habitat Assessment are available from: Patricia A. Kurkul, Regional Administrator, Northeast Region, National Marine Fisheries Service, One Blackburn Drive, Gloucester, MA 01930–2298. The EA/RIR/IRFA is accessible via the Internet at *http://www.nero.gov/ro/doc/nr.htm*.

FOR FURTHER INFORMATION CONTACT: Myles Raizin, Fishery Policy Analyst, 978–281–9104, *Myles.A.Raizin@noaa.gov*.

SUPPLEMENTARY INFORMATION: The Fishery Management Plan for the Atlantic Surf Clam and Ocean Quahog Fisheries (FMP) directs the Assistant Administrator for Fisheries, in consultation with the Mid-Atlantic Fishery Management Council (Council), to specify quotas for surf clams and ocean quahogs on an annual basis from a range that represents the optimum yield (OY) for each fishery. It is the policy of the Council that the levels selected allow fishing to continue at that level for at least 10 years for surf clams and 30 years for ocean quahogs. While staying within this constraint, the Council policy is to also consider the economic benefits of the quotas. As specified in Amendment 10 to the FMP, the Maine mahogany quahog quota is in addition to the quota specified for the ocean quahog fishery.

Detailed background information regarding the development of these quotas was provided in the proposed rule published on January 4, 2000, (65 FR 275), and is not repeated here. The comment period for that rule ended on February 2, 2000. No comments were received, and the final quot as, unchanged from those in the proposed rule, are shown below.

FINAL 2000 SURF CLAM/OCEAN QUAHOG QUOTAS FOR JANUARY 1, 2000, THROUGH DECEMBER 31, 2000

Fishery	2000 final quotas (bu)	2000 final quotas (hL)
[1] Surf clam	2,565,000	1,366,000
[1] Ocean quahog	4,500,000	2,396,000
[2] Maine mahogany quahog	100,000	35,240

[1] 1 bushel = 1.88 cubic ft. = 53.24 liters
[2] 1 bushel = 1.2445 cubic ft. = 35.24 liters

Classification

This action is authorized by 50 CFR part 648 and is exempt from review under E.O. 12866.

Because this rule only establishes year-long quotas to be used for the sole purpose of closing the fishery when the quotas are reached and does not establish any requirements for which a regulated entity must come into compliance, it is unnecessary to delay for 30 days the effective date of this rule. Therefore, the Assistant Administrator for Fisheries, NOAA, under 5 U.S.C. 553(d)(5), finds good cause not to delay the effective date of this rule.

NMFS completed a final regulatory flexibility analysis (FRFA) that contains the items specified in 5 U.S.C. 604(a). The FRFA is as follows:

Final Regulatory Flexibility Analysis for Atlantic Surf Clam, Ocean Quahog, and Maine Mahogany Quahog 2000 Specifications

Need for, and Objectives of, the Rule

This rule is needed to establish allowable harvest levels of Atlantic surf clams and ocean quahogs from the exclusive economic zone and an allowable harvest level of Maine mahogany quahogs from the waters north of 43°50′N. lat. in 2000. The intent of this action is to comply with the regulations governing these fisheries that require the National Marine Fisheries Service to publish annual quotas for each species for each fishing year to conserve and manage the resource in compliance with the regulations, fishery management plan, and Magnuson-Stevens Fishery Conservation and Management Act.

Public Comments

There were no public comments submitted in response to the initial regulatory flexibility analysis (IRFA). No changes were made to the proposed rule.

Number of Small Entities

In 1998, a total of 47 vessels reported harvesting surf clams or ocean quahogs from Federal waters under an Individual Transferable Quota (ITQ) system. Average 1998 gross income for surf clam harvests was $65,919 per vessel, and $685,573 per vessel for ocean quahog harvests. In the small artisanal fishery for Maine mahogany quahogs in Maine, 39 vessels reported harvests in the clam logbooks, with an average value of $48,629 per boat. All of these vessels readily fall within the definition of a small business. From 9 to 12 processors participate in the surf clam and ocean quahog fisheries. However, 3 firms are responsible for the vast majority of purchases in the ex-vessel market and sale of processed clam products in appropriate wholesale markets. In 1999, surf clam allocation holders totaled 107

while 64 firms or individuals held ocean quahog allocation.

Cost of Compliance

No additional costs of compliance, including those associated with recordkeeping and reporting, would result from the implementation of the selected or alternative quotas.

Minimizing Significant Economic Impact on Small Entities

A review of the impacts identified by the regulatory flexibility analysis indicates that the impacts associated with the preferred alternative will not have significant economic impacts on small entities.

NMFS considered four alternatives to the selected 2000 surf clam quota. The selected quota and all alternatives fall within the range of OY established by the FMP. The selected quota (4.5 million bu (2.387 million hL)) is the same quota as was adopted for 1999, is 8 percent greater than the actual harvest in 1998 and so provides no restraint on the fishery, and may decrease ex-vessel prices due to a lessened demand in the fishery. There is a moderate risk that some allocation holders might not be able to market their share of the surf clam allocation. This risk is considered acceptable in order to provide a quota large enough to allow for some increase in demand for the product, while not setting it so high as to force some allocation holders out of business. There were two alternatives with quotas smaller than the one selected. The alternative with the smallest quota represents the minimum OY provided under the FMP (1.85 million bu (0.985 million hL)), a 22-percent decrease from the 1998 actual harvest. This quota was not selected because, at this quota level, the price per bushel would increase, however, overall revenues would fall because it is not likely the increased price would compensate for the reduction in amount of sales. The alternative with the same quota as the harvest level in 1998 actual harvest (2.365 million bu (1.259 million hL)) was not selected because it provided no opportunity for an increase in demand of surf clams, even though prices to fishermen for surf clams would likely be higher due to the restriction on the fishery. The alternatives with quotas larger than the selected quota (2.70 million bu (1.437 million hL) and 3.4 million bu (1.810 million hL)) representing a 14-percent increase from the 1998 actual catch and the maximum allowable quota allowed by the FMP would very likely depress ex-vessel prices. This would increase the risk of business failure for allocation holders not associated with a processor, as vertically integrated companies are expected to buy product from vessels using allocations they control before buying product outside the company.

NMFS considered four alternatives to the selected 2000 ocean quahog quota. The selected quota and all alternatives fall within the range of OY established by the FMP. The selected quota (4.5 million bu (2.396 million hL)), the same quota as was adopted for 1999, is 16 percent greater than the actual harvest in 1998 and so provides no restraint on the fishery. There is no expected change in ex-vessel prices in the fishery as a result of the quota. There were two alternatives with quotas smaller than the one selected. The alternative with the smallest quota represents the minimum OY provided under the FMP (4.0 million bu (2.130 million hL)), a 3-percent increase from the 1998 actual harvest. The next smaller quota alternative represents a 6-percent decrease from the 1999 quota, but a 9-percent increase from the actual harvest in 1998. Pending the outcome of additional assessments on the status of the resource to determine if reductions in the quota were indicated, and that none of these quotas was constraining to the current fishery, these alternatives were not selected. Two alternatives above the selected quota were also considered, 6.0 million bu (3.194 million hL), the maximum OY allowed by the FMP, and 4.75 million bu (2.529 million hL), a 6-percent increase from the 1999 quota and a 22-percent increase from the actual harvest in 1998. Both of these alternatives were not selected because of concerns that upcoming stock assessments might recommend reduced quotas and that the fishery would most likely not be able to utilize such and increase in the quota, anyway.

NMFS maintained the quota for the Maine mahogany quahog fishery at the 1999 level of 100,000 Maine bu (35,240 hL). Landings in 1998 totaled less than 75,000 Maine bu (26,430 hL) and 1999 landings were also expected to be less than the quota. Setting the quota at this level does not appear to either constrain the fishery or endanger the resource. Pending a survey of the resource in the Gulf of Maine, decreasing the quota in the face of steady catches under the quota would constrain the fishery to no purpose and increasing the quota when it could not likely be taken and without a scientific basis to do so is not justified.

A copy of the IRFA is available from the Northeast Regional Office (see **ADDRESSES**).

Authority: 16 U.S.C. 1801 *et seq.*

Dated: May 16, 2000.

Andrew A. Rosenberg,

Deputy Assistant Administrator for Fisheries, National Marine Fisheries Service.

[FR Doc. 00–12836 Filed 5–19–00; 8:45 am]

BILLING CODE 3510–22–F

Proposed Rules

Federal Register
Vol. 65, No. 99
Monday, May 22, 2000

This section of the FEDERAL REGISTER contains notices to the public of the proposed issuance of rules and regulations. The purpose of these notices is to give interested persons an opportunity to participate in the rule making prior to the adoption of the final rules.

DEPARTMENT OF AGRICULTURE

Agricultural Marketing Service

7 CFR Part 930

[Docket No. FV00–930–3 PR]

Tart Cherries Grown in the States of Michigan, New York, Pennsylvania, Oregon, Utah, Washington, and Wisconsin; Decreased Assessment Rates

AGENCY: Agricultural Marketing Service, USDA.

ACTION: Proposed rule.

SUMMARY: This rule would decrease the assessment rate for cherries that are utilized in the production of tart cherry products other than juice, juice concentrate, or puree from $0.00225 to $0.0017 per pound. It also would decrease the assessment rate for cherries utilized for juice, juice concentrate, or puree from $0.001125 to $0.00085 per pound. Both assessment rates are established for the Cherry Industry Administrative Board (Board) under Marketing Order No. 930 for the 2000–2001 and subsequent fiscal periods. The Board is responsible for local administration of the marketing order which regulates the handling of tart cherries grown in the production area. Authorization to assess tart cherry handlers enables the Board to incur expenses that are reasonable and necessary to administer the program. The fiscal period begins July 1 and ends June 30. The assessment rate would remain in effect indefinitely unless modified, suspended, or terminated.

DATES: Comments must be received by June 21, 2000.

ADDRESSES: Interested persons are invited to submit written comments concerning this rule. Comments must be sent to the Docket Clerk, Fruit and Vegetable Programs, AMS, USDA, room 2525–S, P.O. Box 96456, Washington, DC 20090–6456; Fax: (202) 720–5698, or E-mail: moab.docketclerk@usda.gov. Comments should reference the docket number and the date and page number of this issue of the **Federal Register** and will be available for public inspection in the Office of the Docket Clerk during regular business hours.

FOR FURTHER INFORMATION CONTACT: Patricia A. Petrella or Kenneth G. Johnson, DC Marketing Field Office, Fruit and Vegetable Programs, AMS, USDA, Suite 5D03, Unit 155, 4700 River Road, Riverdale, Maryland 20737, telephone: (301) 734–5243; or George Kelhart, Technical Advisor, Marketing Order Administration Branch, Fruit and Vegetable Programs, AMS, USDA, room 2525–S, P.O. Box 96456, Washington, DC 20090–6456; telephone: (202) 720–2491, Fax: (202) 720–5698.

Small businesses may request information on complying with this regulation by contacting Jay Guerber, Marketing Order Administration Branch, Fruit and Vegetable Programs, AMS, USDA, P.O. Box 96456, room 2525–S, Washington, DC 20090–6456; telephone (202) 720–2491, Fax: (202) 720–5698, or E-mail: Jay.Guerber@usda.gov.

SUPPLEMENTARY INFORMATION: This rule is issued under Marketing Agreement and Order No. 930 (7 CFR part 930) regulating the handling of tart cherries grown in the States of Michigan, New York, Pennsylvania, Oregon, Utah, Washington, and Wisconsin, hereinafter referred to as the ''order.'' The marketing agreement and order are effective under the Agricultural Marketing Agreement Act of 1937, as amended (7 U.S.C. 601–674), hereinafter referred to as the ''Act.''

The Department of Agriculture (Department) is issuing this rule in conformance with Executive Order 12866.

This rule has been reviewed under Executive Order 12988, Civil Justice Reform. Under the marketing order now in effect, tart cherry handlers are subject to assessments. Funds to administer the order are derived from such assessments. It is intended that the assessment rate as issued herein would be applicable to all assessable tart cherries beginning July 1, 2000, and continue until amended, suspended, or terminated. This rule will not preempt any State or local laws, regulations, or policies, unless they present an irreconcilable conflict with this rule.

The Act provides that administrative proceedings must be exhausted before parties may file suit in court. Under section 608c(15)(A) of the Act, any handler subject to an order may file with the Secretary a petition stating that the order, any provision of the order, or any obligation imposed in connection with the order is not in accordance with law and request a modification of the order or to be exempted therefrom. Such handler is afforded the opportunity for a hearing on the petition. After the hearing the Secretary would rule on the petition. The Act provides that the district court of the United States in any district in which the handler is an inhabitant, or has his or her principal place of business, has jurisdiction to review the Secretary's ruling on the petition, provided an action is filed not later than 20 days after the date of the entry of the ruling.

This rule would decrease the assessment rate established for the Board for the 2000–2001 and subsequent fiscal periods for cherries that are utilized in the production of tart cherry products other than juice, juice concentrate, or puree from $0.00225 to $0.0017 per pound of cherries. The assessment rate for cherries utilized for juice, juice concentrate, or puree would also be decreased from $0.001125 to $0.00085 per pound.

The tart cherry marketing order provides authority for the Board, with the approval of the Department, to formulate an annual budget of expenses and collect assessments from handlers to administer the program. The members of the Board are producers and handlers of tart cherries. They are familiar with the Board's needs and with the costs for goods and services in their local area and are thus in a position to formulate an appropriate budget and assessment rate. The assessment rate is formulated and discussed in a public meeting. Thus, all directly affected persons have an opportunity to participate and provide input.

For the 1999–2000 fiscal period, the Board recommended, and the Department approved, an assessment rate that would continue in effect from fiscal period to fiscal period unless modified, suspended or terminated by the Secretary upon recommendation and information submitted by the Board or other information available to the Secretary.

The Board met on March 2, 2000, and unanimously recommended 2000–2001 expenditures of $455,000 and an assessment rate of $0.0017 per pound for cherries that are utilized in the production of tart cherry products other than juice, juice concentrate, or puree, and an assessment rate of $0.00085 per pound of cherries utilized for juice, juice concentrate, or puree. In comparison, last year's budgeted expenditures were $497,780. The assessment rates of $0.0017 and $0.00085 are lower than the rates currently in effect. The decreased assessment rates were recommended because the Board expects the 2000 crop to be large, wants to reduce handler costs, and wants to keep its monetary reserve within the authorized maximum of approximately one year's operational expenses specified in section 930.42(a) of the order. The decreased assessment rates together with funds from the Board's operating reserve and interest income are expected to generate enough income to meet the Board's reduced operating expenses in 2000–2001.

The major expenditures recommended by the Board for the 2000–2001 fiscal period include $175,000 for personnel, $120,000 for compliance, and $75,000 for Board meetings. Budgeted expenses for these items in 1999–2000 were $222,780 for personnel, $100,000 for Board meetings, and $100,000 for compliance.

The order provides that when an assessment rate based on the number of pounds of tart cherries handled is established, it should provide for differences in relative market values for various cherry products. The discussion of this provision in the order's promulgation record indicates that proponents testified that cherries utilized in high value products such as frozen, canned, or dried cherries should be assessed one rate while cherries used to make low value products such as juice concentrate or puree should be assessed at one-half that rate.

Data from the National Agricultural Statistics Service (NASS) states that for 1998, tart cherry utilization for juice, wine, or brined uses was 28.3 million pounds for all districts covered under the order. The total processed amount for 1998 was 303.8 million pounds. Juice, wine, and brined tart cherries represented less than 10 percent of the total processed crop, and about 8 percent over the last three seasons (1996 through 1998).

In deriving the recommended assessment rates, the Board estimated assessable tart cherry production for the crop year at 260 million pounds. It further estimated that about 245 million pounds of the assessable poundage would be utilized in the production of high-valued products, like frozen, canned, or dried cherries, and that about 15 million pounds would be utilized in the production of low-valued products, like juice, juice concentrate, or puree. Potential assessment income from the high valued products would be approximately $416,500 (245 million pounds × $0.0017 per pound). The potential income from tart cherries utilized for juice, juice concentrate, or puree would be $12,750 (15 million pounds × $0.00085 per pound). Therefore, total assessment income for 2000–2001 is estimated at $429,250. This amount plus adequate funds in the reserve and interest income would be sufficient to cover budgeted expenses. Funds in the reserve (currently $300,000) would be kept within the approximately one year's operational expenses permitted by the order (7 CFR 930.42(a)).

The proposed assessment rates would continue in effect indefinitely unless modified, suspended, or terminated by the Secretary upon recommendation and information submitted by the Board or other available information.

Although the assessment rates would be in effect for an indefinite period, the Board would continue to meet prior to or during each fiscal period to recommend a budget of expenses and consider recommendations for modification of the assessment rate. The dates and times of Board meetings are available from the Board or the Department. Board meetings are open to the public and interested persons may express their views at these meetings. The Department would evaluate Board recommendations and other available information to determine whether modification of the assessment rate is needed. Further rulemaking would be undertaken as necessary. The Board's 2000–2001 budget and those for subsequent fiscal periods would be reviewed and, as appropriate, approved by the Department.

The Regulatory Flexibility Act and Effects on Small Businesses

The Agricultural Marketing Service (AMS) has considered the economic impact of this action on small entities and has prepared this initial regulatory flexibility analysis. The Regulatory Flexibility Act (RFA) would allow AMS to certify that regulations do not have a significant economic impact on a substantial number of small entities. However, as a matter of general policy, AMS' Fruit and Vegetable Programs (Programs) no longer opt for such certification, but rather perform regulatory flexibility analyses for any rulemaking that would generate the interest of a significant number of small entities. Performing such analyses shifts the Programs' efforts from determining whether regulatory flexibility analyses are required to the consideration of regulatory options and economic or regulatory impacts.

The purpose of the RFA is to fit regulatory actions to the scale of business subject to such actions in order that small businesses will not be unduly or disproportionately burdened. Marketing orders issued pursuant to the Act, and rules thereunder, are unique in that they are brought about through group action of essentially small entities acting on their own behalf. Thus, both statutes have small entity orientation and compatibility.

There are approximately 900 producers of tart cherries in the production area and approximately 40 handlers subject to regulation under the marketing order. Small agricultural producers have been defined by the Small Business Administration (13 CFR 121.201) as those having annual receipts less than $500,000, and small agricultural service firms are defined as those whose annual receipts are less than $5,000,000. The majority of tart cherry producers and handlers may be classified as small entities.

This rule would decrease the assessment rate established for the Board and collected from handlers for the 2000–2001 and subsequent fiscal periods for cherries utilized in the production of tart cherry products other than juice, juice concentrate, or puree from $0.00225 to $0.0017 per pound, and the assessment rate for cherries utilized for juice, juice concentrate, or puree from $0.001125 to $0.00085 per pound. The Board unanimously recommended 2000–2001 expenditures of $455,000 and the reduced assessment rates. The quantity of assessable tart cherries for the 2000–2001 crop year is estimated at 260 million pounds. Assessment income, based on this crop, along with interest income and reserves would be adequate to cover budgeted expenses.

The major expenditures recommended by the Board for the 2000–2001 fiscal period include $175,000 for personnel, $120,000 for compliance, and $75,000 for Board meetings. Budgeted expenses for these items in 1999–2000 were $222,780 for personnel, $100,000 for Board meetings, and $100,000 for compliance.

Decreased assessment rates were recommended by the Board because the Board expects the 2000 crop to be large, wants to reduce handler costs, and

wants to keep its monetary reserve within the authorized maximum of approximately one year's operational expenses as specified in section 930.42(a) of the order.

The Board discussed the alternative of continuing the existing assessment rates, but concluded that the Board should operate as efficiently as possible and the amount collected could cause the operating reserve to exceed what is actually needed. In deriving the recommended assessment rates, the Board estimated assessable tart cherry production for the crop year at 260 million pounds. It further estimated that about 245 million pounds of the assessable poundage would be utilized in the production of high-valued products, like frozen, canned, or dried cherries, and that about 15 million pounds would be utilized in the production of low-valued products, like juice, juice concentrate, or puree. Potential assessment income from the high valued products would be approximately $416,500 (245 million pounds × $0.0017 per pound). The potential income from tart cherries utilized for juice, juice concentrate, or puree would be $12,750 (15 million pounds × $0.00085 per pound). Therefore, total assessment income for 2000–2001 is estimated at $429,250. This amount plus adequate supplies in the reserve would be sufficient to cover budgeted expenses. Funds in the reserve (currently $300,000) would be kept within the approximately one year's operational expenses permitted by the order (7 CFR 930.42(a)).

This action would decrease the assessment obligation imposed on handlers. Assessments are applied uniformly on all handlers, and some of the costs may be passed on to producers. However, decreasing the assessment rate reduces the burden on handlers, and may reduce the burden on producers. In addition, the Board's meeting was widely publicized throughout the tart cherry industry and all interested persons were invited to attend the meeting and participate in Board deliberations on all issues. Like all Board meetings, the March 2, 2000, meeting was a public meeting and all entities, both large and small, were able to express views on this issue. Finally, interested persons are invited to submit information on the regulatory and informational impacts of this action on small businesses.

This action would impose no additional reporting or recordkeeping requirements on either small or large tart cherry handlers. As with all Federal marketing order programs, reports and forms are periodically reviewed to reduce information requirements and duplication by industry and public sector agencies.

The Department has not identified any relevant Federal rules that duplicate, overlap, or conflict with this rule.

A small business guide on complying with fruit, vegetable, and specialty crop marketing agreements and orders may be viewed at the following web site: http://www.ams.usda.gov/fv/moab.html. Any questions about the compliance guide should be sent to Jay Guerber at the previously mentioned address in the **FOR FURTHER INFORMATION CONTACT** section.

A 30-day comment period is provided to allow interested persons to respond to this proposed rule. Thirty days is deemed appropriate because: the 2000–2001 fiscal period begins on July 1, 2000, and the rate of assessment applies to all assessable tart cherries handled during the fiscal period.

List of Subjects in 7 CFR Part 930

Marketing agreements, Reporting and recordkeeping requirements, Tart cherries.

For the reasons set forth in the preamble, 7 CFR part 930 is proposed to be amended as follows:

PART 930—TART CHERRIES GROWN IN THE STATES OF MICHIGAN, NEW YORK, PENNSYLVANIA, OREGON, UTAH, WASHINGTON, AND WISCONSIN

1. The authority citation for 7 CFR part 930 continues to read as follows:

Authority: 7 U.S.C. 601–674.

2. Section 930.200 is revised to read as follows:

§ 930.200 Handler assessment rate.

On and after July 1, 2000, the assessment rate imposed on handlers shall be $0.0017 per pound of cherries handled for tart cherries grown in the production area and utilized in the production of tart cherry products other than juice, juice concentrate, or puree. The assessment rate for juice, juice concentrate, and puree products shall be $0.00085 per pound.

Dated: May 16, 2000.

Robert C. Keeney,

Deputy Administrator, Fruit and Vegetable Programs.

[FR Doc. 00–12800 Filed 5–19–00; 8:45 am]

BILLING CODE 3410–02–P

DEPARTMENT OF TRANSPORTATION

Federal Aviation Administration

14 CFR Part 71

[Airspace Docket No. 00–ACE–11]

Amendment of Class E Airspace; Kearney, NE

AGENCY: Federal Aviation Administration (FAA), DOT.

ACTION: Notice of proposed rulemaking

SUMMARY: This notice proposes to amend the Class E surface area at Kearney Municipal Airport, Kearney, NE. The FAA has received a request to amend the hours of Class E surface area from part time to full time. An increase in Part 121 and other Instrument Flight Rule (IFR) operations have made this request necessary. The intended effect of this rule is to amend the Class E surface area from part time to full time.

DATES: Comments must be received on or before July 10, 2000.

ADDRESSES: Send comments on the proposal in triplicate to: Manager, Airspace Branch, Air Traffic Division, ACE–520, DOT Regional Headquarters Building, Federal Aviation Administration, Docket Number 00–ACE–11, 901 Locust, Kansas City, MO 64106.

The official docket may be examined in the Office of the Regional Counsel for the Central Region at the same address between 9:00 a.m. and 3:00 p.m., Monday through Friday, except Federal holidays.

An informal docket may also be examined during normal business hours in the office of the Manager, Airspace Branch, Air Traffic Division, at the address list above.

FOR FURTHER INFORMATION CONTACT: Brenda Mumper, Air Traffic Division, Airspace Branch, ACE–520A, DOT Regional Headquarters Building, Federal Aviation Administration, 901 Locust, Kansas City, MO 64106; telephone: (816) 329–2524.

SUPPLEMENTARY INFORMATION:

Comments Invited

Interested parties invited to participate in this proposed rulemaking by submitting such written, data, views, or arguments as they may desire. Comments that provide the factual basis supporting the views and suggestions presented are particularly helpful in developing reasoned regulatory decisions on the proposal. Comments are specifically invited on the overall regulatory, economic, environmental, and energy-related aspects of the

proposal. Communications should identify the airspace docket number and be submitted in triplicate to the address listed above. Commenters wishing the FAA to acknowledge receipt of their comments on this notice must submit with those comments a self-addressed, stamped postcard on which the following statement is made: ''Comments to Airspace Docket No. 00–ACE–11.'' The postcard will be date/time stamped an returned to the commenter. All communications received on or before the closing date for comments will be considered before taking action on the proposed rule. The proposal contained in this notice maybe changed in light of comments received. All comments submitted will be available for examination in the Rules Docket both before and after the closing date for comments. A report summarizing each substantive public contact with FAA personnel concerned with this rulemaking will be filed in the docket.

Availability of NPRMs

Any person may obtain a copy of this Notice of Proposed Rulemaking (NPRM) by submitting a request to the Federal Aviation Administration, Office of Public Affairs, Attention: Public Inquiry Center, APA–230, 800 Independence Avenue, SW, Washington, DC 20591, or by calling (202) 267–3484. Communications must identify the notice number of this NPRM. Persons interested in being placed on a mailing list for future NPRMs should also request a copy of Advisory Circular No. 11–2A, which describes the procedures.

The Proposal

The FAA is considering an amendment to 14 CFR part 71 to amend the Class E surface area at Kearney Municipal Airport, Kearney, NE. The FAA has received a request to amend the Class E surface area from part time to full time. The intended effect of this action is to provide segregation of aircraft operating under IFR from aircraft operating in visual weather conditions. The area would be depicted on appropriate aeronautical charts thereby enabling pilots to circumnavigate the area or otherwise comply with IFR procedures. Class E airspace areas designated as a surface area for an airport are published in paragraph 6002 of FAA Order 7400.9G, dated September 10, 1999, and effective September 16, 1999, which is incorporated by reference in 14 CFR 71.1. The Class E airspace designation listed in this document would be published subsequently in the Order.

The FAA has determined that this proposed regulation only involves an established body of technical regulations for which frequent and routine amendments are necessary to keep them operationally current. Therefore, this proposed regulation (1) is not a ''significant regulatory action'' under Executive Order 12866; (2) is not a ''significant rule'' under DOT Regulatory Policies and Procedures (44 FR 11034; February 26, 1979); and (3) does not warrant preparation of a Regulatory Evaluation as the anticipated impact is so minimal. Since this is a routine matter that will only affect air traffic procedures and air navigation, it is certified that this proposed rule will not have a significant economic impact on a substantial number of a small entities under the criteria of the Regulatory Flexibility Act.

List of Subjects in 14 CFR Part 71

Airspace, Incorporation by reference, Navigation (air).

The Proposed Amendment

Accordingly, pursuant to the authority delegated to me, the Federal Aviation Administration proposes to amend 14 CFR part 71 as follows:

PART 71—DESIGNATION OF CLASS A, CLASS B, CLASS C, CLASS D, AND CLASS E AIRSPACE AREAS; AIRWAYS; ROUTES; AND REPORTING POINTS

1. The authority citation for part 71 continues to read as follows:

Authority: 49 U.S.C. 106(g), 40103, 40113, 40120; E.O. 10854, 24 FR 9565, 3 CFR, 1959–1963 Comp., p. 389.

§ 71.1 [Amended]

2. The incorporation by reference in 14 CFR 71.1 of Federal Aviation Administration Order 7400.9G, Airspace Designations and Reporting Points, dated September 10, 1999, and effective September 16, 1999, is amended as follows:

Paragraph 6002 Class E airspace areas designated as a surface area for an airport

* * * * *

ACE NE E2 Kearney, NE [Revised]

Kearney Municipal Airport, NE
(Lat. 40°43′37″N., long. 99°00′24″W.)
Kearney VOR
(Lat. 40°43′37″N., long. 99°00′18″W.
Within a 4.2-mile radius of Kearney Municipal Airport and within 3.1 miles each side of the 194° radial of the Kearney VOR extending from the 4.2-mile radius to 9.2 miles south of the VOR and within 3.1 miles each side of the 329° radial of the Kearney VOR extending from the 4.2-mile radius to 10 miles northwest of the VOR and within 3.1 miles each said of the 360° radial of the Kearney VOR extending form the 4.2-mile radius to 10 miles north of the airport.

* * * * *

Dated: Issued in Kansas City, MO, on May 9, 2000.

Herman J. Lyons, Jr.,

Manager, Air Traffic Division, Central Region.

[FR Doc. 00–12820 Filed 5–19–00; 8:45 am]

BILLING CODE 4910–13–M

DEPARTMENT OF TRANSPORTATION

Federal Aviation Administration

14 CFR Part 71

[Airspace Docket No. 00–ACE–10]

Establishment of Class E Airspace; Lamoni, IA

AGENCY: Federal Aviation Administration (FAA), DOT.

ACTION: Notice of proposed rulemaking.

SUMMARY: This notice proposes to establish Class E airspace area at Lamoni Municipal Airport, Lamoni, IA. The Federal Aviation Administration has developed Area Navigation (RNAV) Runway (RWY) 17 and RNAV RWY 35 Standard Instrument Approach Procedures (SIAPs) to serve Lamoni Municipal Airport, Lamoni, IA. Controlled airspace extending upward from 700 feet Above Ground Level (AGL) is needed to accommodate aircraft executing the SIAPs. This proposal would create controlled airspace at Lamoni Municipal Airport. The intended effect of this rule is to provide controlled airspace for aircraft executing the SIAPs at the Lamoni Municipal Airport.

DATES: Comments must be received on or before July 5, 2000.

ADDRESSES: Send comments on the proposal in triplicate to; Manager, Airspace Branch, Air Traffic Division, ACE–520, DOT Regional Headquarters Building, Federal Aviation Administration, Docket Number 00–ACE–10, 901 Locust, Kansas City, MO 64106.

The official docket may be examined in the Office of the Regional Counsel for the Central Region at the same address between 9 a.m. and 3 p.m., Monday through Friday, except Federal holidays.

An informal docket may also be examined during normal business hours in the office of the Manager, Airspace Branch, Air Traffic Division, at the address listed above.

FOR FURTHER INFORMATION CONTACT: Kathy Randolph, Air Traffic Division, Airspace Branch, ACE–520C, DOT Regional Headquarters Building, Federal

Aviation Administration, 901 Locust, Kansas City, MO 64106; telephone: (816) 329–2525.

SUPPLEMENTARY INFORMATION:

Comments Invited

Interested parties are invited to participate in this proposed rulemaking by submitting such written data, views, or arguments as they may desire. Comments that provide the factual basis supporting the views and suggestions presented are particularly helpful in developing reasoned regulatory decisions on the proposal. Comments are specifically invited on the overall regulatory, economic, environmental, and energy-related aspects of the proposal. Communications should identify the airspace docket number and be submitted in triplicate to the address listed above. Commenters wishing the FAA to acknowledge receipt of their comments on this notice must submit with those comments a self-addressed, stamped postcard on which the following statement is made: ''Comments to Airspace Docket No. 00–ACE–10.'' The postcard will be date/time stamped and returned to the commenter. All communications received on or before the closing date for comments will be considered before taking action on the proposed rule. The proposal contained in this notice may be changed in light of comments received. All comments submitted will be available for examination in the Rules Docket both before and after the closing date for comments. A report summarizing each substantive public contact with FAA personnel concerned with this rulemaking will be filed in the docket.

Availability of NPRMs

Any person may obtain a copy of this Notice of Proposed Rulemaking (NPRM) by submitting a request to the Federal Aviation Administration, Office of Public Affairs, Attention: Public Inquiry Center, APA–230, 800 Independence Avenue, SW, Washington, DC 20591, or by calling (202) 267–3484. Communications must identify the notice number of this NPRM. Persons interested in being placed on a mailing list for future NPRMs should also request a copy of Advisory Circular No. 11–22A, which describes the procedures.

The Proposal

The FAA is considering an amendment to 14 CFR part 71 to establish Class E airspace at Lamoni Municipal Airport, Lamoni, IA. The FAA has developed RNAV RWY 17 and RNAV RWY 35 SIAPs to serve the Lamoni Municipal Airport, Lamoni, IA. Controlled airspace extending upward from 700 feet AGL is needed to contain aircraft executing these SIAPs. The intended effect of this action is to provide segregation of aircraft operating under Instrument Flight Rules (IFR) from aircraft operating in visual weather conditions. The area would be depicted on appropriate aeronautical charts thereby enabling pilots to circumnavigate the area or otherwise comply with IFR procedures. Class E airspace designations for airspace areas extending upward from 700 feet or more above the surface of the earth are published in paragraph 6005 of FAA Order 7400.9G, dated September 10, 1999, and effective September 16, 1999, which is incorporated by reference in 14 CFR 71.1. The Class E airspace designation listed in this document would be published subsequently in the Order.

The FAA has determined that this proposed regulation only involves an established body of technical regulations for which frequent and routine amendments are necessary to keep them operationally current. Therefore, this proposed regulation: (1) Is not a ''significant regulatory action'' under Executive Order 12866; (2) is not a ''significant rule'' under DOT Regulatory Policies and Procedures (44 FR 11034; February 26, 1979); and (3) does not warrant preparation of a Regulatory Evaluation as the anticipated impact is so minimal. Since this is a routine matter that will only affect air traffic procedures and air navigation, it is certified that this proposed rule will not have a significant economic impact on a substantial number of small entities under the criteria of the Regulatory Flexibility Act.

List of Subjects in 14 CFR Part 71

Airspace, Incorporation by reference, Navigation (air).

The Proposed Amendment

Accordingly, pursuant to the authority delegated to me, the Federal Aviation Administration proposed to amend 14 CFR part 71 as follows:

PART 71—DESIGNATION OF CLASS A, CLASS B, CLASS C, CLASS D, AND CLASS E AIRSPACE AREAS; AIRWAYS; ROUTES; AND REPORTING POINTS

1. The authority citation for part 71 continues to read as follows:

Authority: 49 U.S.C. 106(g), 40103, 40113, 40120; E.O. 10854, 24 FR 9565, 3 CFR, 1959–1963 Comp., p. 389.

§ 71.1 [Amended]

2. The incorporation by reference in 14 CFR 71.1 of Federal Aviation Administration Order 7400.9G, Airspace Designations and Reporting Points, dated September 10, 1999, and effective September 16, 1999, is amended as follows:

Paragraph 6005 Class E airspace areas extending upward from 700 feet or more above the surface of the earth.

* * * * *

ACE IA E5 Lamoni, IA [New]

Lamoni Municipal Airport, IA
(Lat. 40°37′59″ N., long. 93°54′08″ W.)

That airspace extending upward from 700 feet above the surface within a 6.3-mile radius of Lamoni Municipal Airport.

* * * * *

Issued in Kansas City, MO, on May 9, 2000.

Herman J. Lyons, Jr.,

Manager, Air Traffic Division, Central Region.

[FR Doc. 00–12822 Filed 5–19–00; 8:45 am]

BILLING CODE 4910–13–M

DEPARTMENT OF COMMERCE

National Oceanic and Atmospheric Administration

15 CFR Part 922

[Docket No. 970626156–0125–03]

RIN 0648–AK01

Regulation of the Operation of Motorized Personal Watercraft in the Gulf of the Farallones National Marine Sanctuary

AGENCY: Marine Sanctuaries Division (MSD), Office of Ocean and Coastal Resource Management (OCRM), National Ocean Service (NOS), National Oceanic and Atmospheric Administration (NOAA), Department of Commerce (DOC).

ACTION: Proposed rule; Notice of withdrawal; Notice of availability of Draft Environmental Assessment.

SUMMARY: NOAA proposes to amend the regulations governing activities in the Gulf of the Farallones National Marine Sanctuary (GFNMS or Sanctuary) to prohibit the operation of motorized personal watercraft (MPWC) within the boundaries of the GFNMS. This proposed action responds to a petition from the Environmental Action Committee (EAC) of West Marin, California.

This document also responds to comments received in response to a proposed rule that NOAA published on April 23, 1999, concerning operation of

MPWC in the Sanctuary and a public hearing held June 2, 1999, on the proposed rule. This document withdraws and replaces that proposed rule that proposed to prohibit the operation of MPWC within the nearshore areas of the Sanctuary. This regulation is necessary to protect sensitive biological resources, to minimize user conflict, and to protect the ecological, aesthetic, and recreational qualities of the Sanctuary. NOAA also announces the availability of a Draft Environmental Assessment (DEA) on the proposed rule.

DATES: Comments on the proposed rule or DEA must be received by June 21, 2000. A public hearing on this proposed rule will be held on June 12, 2000 at 6:30 p.m. at the address listed below.

ADDRESSES: Comments should be sent to Ed Ueber, Sanctuary Manager, Gulf of the Farallones National Marine Sanctuary, Ft. Mason, Building 201, San Francisco, California 94123; fax: (415) 561–6616. Comments received will be available for public inspection at the above address. A public hearing on the proposed rule will be held at the Bear Valley Visitor's Center at the Point Reyes National Seashore, Inverness, California, on June 12, 2000 at 6:30 p.m. The DEA may be obtained from the Sanctuary address indicated above.

FOR FURTHER INFORMATION CONTACT: Ed Ueber at (415) 561–6622.

SUPPLEMENTARY INFORMATION:

I. Background

In recognition of the national significance of the unique marine environment of the Gulf of the Farrallones, California, the GFNMS was designated in January, 1981. The GFNMS regulations at 15 CFR Part 922, Subpart H prohibit a relatively narrow range of activities to protect Sanctuary resources and qualities.

On April 18, 1996, the Environmental Action Committee (EAC) of West Marin, California, petitioned the GFNMS to ban the use of MPWC in the Sanctuary. Operation of MPWC is currently not regulated by the Sanctuary. The EAC identified a number of concerns regarding the use of MPWC within the Sanctuary. In its petition, the EAC asserted that: MPWC are completely incompatible with the existence of a marine sanctuary; pose a danger to the biological resources of the sanctuary, such as marine mammals, wildfowl, kelp beds, anadromous fish, and other marine life; create noise, water and air pollution; and threaten mariculture and other commerce throughout the Sanctuary. The EAC also stated that MPWC create a hazard for other Sanctuary users, including swimmers, sailboats, windsurfers, open-water rowing shells and kayaks. NOAA also received 195 letters from members of the public in response to media publicity about the petition. Sixty-four percent opposed regulation of MPWC; 33% supported the EAC's requested ban; one percent expressed no clear opinion.

To supplement existing information on the use and impacts of MPWC, NOAA published a Notice of Inquiry/Request for Information in the **Federal Register** on August 21, 1997, initiating a 45-day comment period that ended October 6, 1997. NOAA requested information on the following: (1) The number of motorized personal watercraft being operated in the Sanctuary; (2) possible future trends in such numbers; (3) the customary launching areas for motorized personal watercraft in or near the Sanctuary; (4) the areas of use of motorized personal watercraft activity in the Sanctuary, including areas of concentrated use; (5) the periods (*e.g.,* time of year, day) of use of motorized personal watercraft in the Sanctuary, including periods of high incidence of use; (6) studies or technical articles concerning the impacts of motorized personal watercraft on marine resources and other users; (7) first person or documented accounts of impacts of motorized personal watercraft on marine resources and other users; and (8) any other information or other comments that may be pertinent to this issue. NOAA received 160 public comments in response to the notice of inquiry and two signature petitions during the comment period. One hundred fifty-three (96%) supported banning the operation of MPWC within the GFNMS. Two signature petitions were also received; one, with 276 signatures, supported the ban; the second, with 41 signatures, opposed the ban. Forty-four people spoke at a public meeting held to gather information during the comment period, all but one of who supported the petition to ban MPWC operation. Half of the speakers at the public meeting had previously submitted written comments.

Responses to and investigation of the specific questions in the August, 1997 notice revealed that: (1) The number of MPWC currently being operated in Sanctuary waters is believed by the proprietors of Lawson's Landing, the primary MPWC launch site in Sanctuary waters, to be less than 200 launches per year by approximately 20 users; (2) the use of MPWC in Sanctuary waters is believed to be increasing; (3) there are two established MPWC launch sites in the Sanctuary, at Bodega Harbor and Lawson's Landing; (4) the areas in the Sanctuary where MPWC are operated are in the vicinity of the mouth of Tomales Bay and the area outside Bodega Harbor—over 95% of MPWC operation that occurs in the Sanctuary occurs in these areas; (5) April through November appear to be the times of highest use of MPWC in Sanctuary waters; (6, 7, and 8) numerous studies, technical articles, and personal documentation such as photos, letters and logs of the impacts of MPWC on marine resources and other users were received and collected.

The following were identified during NOAA's review of this issue: (1) Water-based recreational activity is increasing in the United States; (2) water-based recreational activity has impacted coastal habitats, seabirds, marine mammals and fish; (3) operation of MPWC is a relatively new and increasingly popular water sport; (4) MPWC, are different from other types of motorized watercraft in their structure (smaller size, shallower draft, two-stroke engine, and exhaust venting to water as opposed to air) and their operational impacts (operated at faster speeds, operated closer to shore, make quicker turns, stay in a limited area, tend to operate in groups, and have more unpredictable movements); (5) MPWC have been operated in such a manner as to create a safety hazard to other resource users in the vicinity; (6) MPWC may interfere with marine commercial users; (7) MPWC have disturbed natural quiet and aesthetic appreciation; (8) MPWC have interfered with other marine recreational uses; (9) MPWC have impacted coastal and marine habitats; (10) MPWC have disturbed waterfowl and seabirds; (11) MPWC have disturbed marine mammals; (12) MPWC may disturb fish; (13) other jurisdictions have had problems with MPWC and have proposed and implemented various means of attempting to solve the problems; (14) the Sanctuary has sensitive areas that were deemed worthy of protection by the designation of a National Marine Sanctuary, including five State designated Areas of Special Biological Significance and four semi-enclosed estuarine areas; and (15) MPWC present a present and potential threat to resources and users of the GFNMS.

Based on this information, the NMSP published a proposed rule to prohibit operation of MPWC from the mean high tide line seaward to 1000 yards. The proposed rule was geared toward protecting Sanctuary resources and minimizing user conflict in the nearshore areas. NOAA received 53

public comments on the proposed rule. Fifty-one commentors (96%) supported a full ban on MPWC within the GFNMS and 2 (4%) opposed the proposed regulations. On June 2, 1999, a public hearing to accept comments on the proposed rule was held in Point Reyes, California. Five people spoke at the public hearing. Three people spoke in favor of a complete ban on MPWC within the GFNMS and two people spoke out against the proposed 1000-yard restriction. Comments received on the April 23 rule and NOAA's responses are provided below.

The waters of the Sanctuary are home to a rich diversity of marine biota and provide critical habitat for seabirds, marine mammals, fishes, invertebrates, sea turtles and marine flora. The importance and uniqueness of Sanctuary waters has been internationally recognized by the incorporation of Sanctuary waters into the United Nations' Man in the Biosphere system as part of the Golden Gate Biosphere Reserve, and the desigantion of Bolinas Lagoon as a RAMSAR site (the Convention for Wetlands of International Significance). The National Marine Fisheries Service is considering areas within the Sanctuary for designation as Essential Fish Habitat as mandated by the Magnuson-Stevens Fisheries Conservation and Management Act (James Bybee, NOAA, pers. comm., 7 January 2000).

Among the hundreds of bird species that reside in or migrate through the Sanctuary, many species are endangered, threatened or of special concern. These include the following species, which are found in the Sanctuary and on the Farallon Islandds:

(Key: FE=Federally listed as endangered; FT=Federally listed as threatened; SE=listed in the State of California as endangered; ST=listed in the State of California as threatened; CSC=California species of concern)

Swimmers [ducks and duck-like]

Aleutian Canada Goose, Branta canadensis leucopareia, FT
Barrow's Goldeneye, Bucephala islandica, CSC
Common Loon, Gavia immer, CSC
Double-crested Cormorant, Palacrocorax auritus, CSC
Harlequin Duck, Histrionicus histrionicus, CSC
Marbled Murrelet, Brachyramphus marmoratus, FT/SE

Aerialists [gulls and gull-like]

American White Pelican, Pelecanus erythorhynchos, CSC
Ashy Storm Petrel, Oceanodroma homochroa, CSC
California Brown, Pelican Pelecanus occidentalis californicus, FE/SE
California Gull, Larus californicus, CSC
California Least Tern, Sterna antillarum browni, FE/SE
Elegant Tern, Sterna elegant, CSC
Short-tailed Albatross, Diomedea albatrus, FE

Long-legged waders [e.g., herons, cranes]

California Black Rail, Laterallus jamaicensis corurniculus, ST

Smaller waders [e.g., plovers, sandpipers]

Long-billed Curlew, Numenius americanus, CSC
Western Snowy Plover, Charadrius alexandrinus niv., FT/CSC

Birds of prey [hawks, eagles, owls]

Bald Eagle check status, Halliaeetus leucocephalus, FT
Ferruginous Hawk, Buteo regalis, CSC
Osprey, Pandion haliaetus, CSC
Prairie Falcon, Falco mexicanus, CSC
Peregrine Falcon, Falco peregrinus, FE

Passerine birds [perching]

Saltmarsh common yellowthroat, Geothlypis trichas sinuosa, CSC

There are at least twelve critical marine band nesting areas along the shoreline of the Sanctuary. More than twelve species of marine birds breed within the Sanctuary and the nesting population on the Farallon Islands comprises the largest concentration of breeding marine birds in the continental U.S. During nesting and rearing of young, these sea birds are especially dependent on the Sanctuary's offshore waters for food.

Thirty-free species of marine mammals have been observed in the Sanctuary including one mustelid, six species of pinnipeds and twenty-six species of cetaceans. About 20% of the state's breeding population of harbor seals live within the boundaries of the Sanctuary, and northern fur seals are starting to recolonize historic pupping sites within the Sanctuary for the first time since 1820. Of the twenty-six species of cetaceans that occur in Sanctuary waters, nineteen are migratory, and seven are considered resident species. Many of these marine mammals occur in large concentrations and are dependent on the productive and secluded habitat of the Sanctuary's waters and adjacent coastal areas for breeding, pupping, hauling-out, feeding, and resting during migration. Three areas in the Sanctuary have been identified as critical feeding areas for the threatened Stellar sea lion, including the nearshore areas around Point Reyes, the northern half of Tomales Bay and areas adjacent to the Farallon Islands. Harbor seals, elephant seals, California sea lions, Dall's porpoise, harbor porpoise and gray whales are common residents in Sanctuary waters. Gray whales pass through the Sanctuary twice a year on their migration route between winter calving grounds in Mexico and summertime feeding areas in Alaska. In recent years, individuals have remained in the Gulf of the Farallones to feed instead of proceeding to the feeding grounds in Alaska. Some individuals have acclimated to conditions in the Sanctuary and are now year round residents. In 1999, unprecedented numbers of gray whales were foraging in Bodega Bay. Southern sea otter populations are also recovering from near extinction and recolonizing areas within their historic range. Sitings of sea otters in the GFNMS have increased from two individuals in 1992 to 20 animals in 1998 (Dr. Sarah Allen pers. comm. July 1999). It is imperative that these animals, be protected in an area which may be providing new opportunity for the species survival (Anonymous 1990).

Other populations of marine mammals are also recovering after years of human exploitation. As populations begin to rebound, individuals are expanding the populations distribution back into historic ranges. In many instances, such as the gray whales, sea otters, northern fur seals and elephant seals, animals are using feeding areas and haul outs that have not been utilized for decades. It is important for the Sanctuary to provide habitat that was historically available and allow these populations to return to their natural abundance and distribution levels. Four species of endangered sea turtles are also known to reside in or migrate through Sanctuary waters. A listing of all threatened and endangered marine mammals and sea turtles follows.

(Key: FE=Federally listed as endangered; FT=Federally listed as threatened; ST=listed in the State of California as threatened)

Pinnipeds

Guadelupe fur seal, Arctocephalus townsendi, FT/ST
Steller (Northern) sea lion, Eumetopias jubatus, FT

Mustelids

Southern sea otter, Enhydra lutris nereis, FT

Cetaceans

Blue whale, Balaenoptera musculus, FE

Humpback whale, Magaptera noveangliae, FE
Sei whale, Balaenoptera robustus, FE
Sperm whale, Physeter macrocphalus, FE
Fin whale, Balaenoptera physalus, FE

Sea Turtles

Green turtle, Chelonia mydas, FE
Leatherback turtle, Dermochelys coriacea, FE
Loggerhead turtle, Caretta caretta, FE
Olive (Pacific) ridley, Lepidochelys olivacea, FE

Because of its unique geology and geography, the biological diversity found within the Gulf of the Farallones National Marine Sanctuary rivals any location along the Pacific coast. Fueled by the strongest coastal upwelling in North America (Bakun 1973), abundant biological resources thrive in the productive waters of the Gulf's broad, shallow continental shelf. A counter-clockwise eddy that swirls south of Point Reyes in the Gulf of the Farallones concentrates the products of upwelling (Wing *et al.* 1995) and acts like an incubator for small developing animals. These in turn are food for organisms higher up on the food web. The result is a marine system that supports some of the most active commercial fisheries on the west coast, provides food and habitat to support the largest concentration of breeding seabirds in the continental United States, and supports roughly 20% of the breeding population for California's harbor seals. It is a destination feeding area for protected white sharks (Klimley and Ainley 1996) and endangered blue and humpback whales in the summer and fall (Kieckhefer 1992). The sharks aggregate in coastal areas and near the Farallon islands from spring through fall to feed on an abundance of seals and sea lions. The whales travel from Mexico to feed on the concentrations of krill and forage fish found in the Sanctuary's offshore habitats. From spring through late summer, krill swarm in the surface layers of the ocean (Smith and Adams 1988). It is during these daytime surface swarms that krill are most vulnerable to predators. Endangered whales, seabirds and salmon feed heavily on krill when they are concentrated in these surface aggregations.

The protected bays and coastal wetlands of the Sanctuary, such as Bodega Bay, Tomales Bay, Drakes Bay, Bolinas Lagoon, Estero Americano and Estero de San Antonio, provide diverse habitats including intertidal mudflats, send flats, salt marshes, submerged rocky terraces, and shallow subtidal areas. These areas support large populations of benthic fauna and concentrations of burrowing organisms and organisms living on marine plants. Submerged eelgrass (Zostera marina) beds are prevelant in the northern portion of Tomales Bay and provide crucial feeding habitat for more than 50 resident, breeding, and migratory bird species. These eelgrass beds are also important for many marine invertebrates and for the developing egg masses of herring and other fishes. It is estimated that approximately 30 million herring annually spawn on the eelgrass beds of Tomales Bay (Fox 1997). The shallow protected bays and estuaries are also important habitat for anadromus fish, surfperches, sharks, rays and flatfish. Over 150 species of fish are found in the Sanctuary including the federally endangered winter-run Chinook salmon and the federally threatened coho salmon, spring run Chinook salmon, steelhead trout and tidewater goby.

The nearshore coastal waters of the Sanctuary are sensitive biological habitats where myriad marine invertebrates and algae reside, where bird rookeries and pinniped haulout sites are present, where many critical nursery and food source habitats for wildlife are located, and where many nearshore users of the Sanctuary's water tend to concentrate.

The nearshore waters of the Sanctuary are the areas most heavily used for recreation. Areas such as Bodega Bay and Tomales Bay are used for sailing, canoeing, rowing, kayaking and swimming. These activities are often conducted close to shore and may be dependent on calm waters. The ability of MPWC to go very close to shore (due to their shallow draft) and move in unpredictable ways may be detrimental to the safety and aesthetic experience of those conducting these more benign recreational activities.

The offshore waters of the Sanctuary provide entrance and egress for commercial shipping traffic using ports in San Francisco Bay. Tankers and container ships traverse the Sanctuary in shipping lanes, which funnel traffic in northbound and southbound directions. These offshore waters also support active sport and commercial fisheries. Small skiffs and larger commercial vessels move at constant speeds or drift through the Sanctuary waters fishing for salmon and albacore. Rockfish and urchin boats fish high spots and reefs closer to shore. On the softer sediment of the continental shelf, crab fishermen lay out rows of crab pots each one identified with a buoy at the surface. All of these activities have gear in the water that extends some distance from the boat and the gear is not readily apparent to the casual observer. Most fishermen are aware of how other gear types are deployed and operated. In cases where the potential for conflict arises, most boats operating offshore have navigation equipment and radios to communicate with each other. Commercial whale watching and seabird operators regularly use the offshore area of the Sanctuary for wildlife viewing opportunities. These offshore areas provide important habitat for feeding blue whales, humpback whales, gray whales, harbor porpoise, Steller sea lions, Pacific white sided dolphins, Dall's porpoise, California sea lions, common murres, Cassin's auklets, rhinoceros auklets, three species of cormorants, two species of grebes, tufted puffins, pigeon guillemots, marbled murrelets, black footed albatross, storm petrels, shearwaters, fulmars and many species of seabirds and marine mammals that are less abundant.

Ten percent of California's threatened coho salmon population use the outer Sanctuary and Tomales Bay during the ocean phase of their life history before returning to Lagaunitas creek and other creeks on the spawning migration which completes their life cycle. Newly listed populations of chinook salmon also use the Gulf of the Farallons as adults before returning to the Sacramento River drainage to spawn. Because of the significant biological diversity found within the Sanctuary including 11 federally endangered and 7 threatened species of birds, fish, turtles, and marine mammals and the importance of Sanctuary habitats for maintaining these populations, NOAA as the public trustee agency for these resources takes a precautionary approach to their protection. The potential for adverse environmental impacts from MPWC operation poses an unacceptable risk to the health of these resources, and because of the high potential for user conflicts, NOAA has decided to prohibit MPWC from operating within the boundaries of the GFNMS, including waters surrounding the Farallon Islands. The restricted areas include Drakes Bay, Tomales Bay, Bolinas Lagoon, Estero Americano, Estero de San Antonio, Bodega Bay, and all other areas within Sanctuary boundary.

As of 1 November 1998, launching MPWC from Point Reyes National Seashore (PRNS) of Golden Gate National Recreation Area (GGNRA) was prohibited (U.S. Dept. of Interior 1998 a & b). On 25 October 1999, after NOAA published its April 23, 1999 proposed rule, Marine County banned the use of MPWC within three statute miles of the ocean shore line as well as all tributaries flowing into the ocean up to seven miles

inland.[1] As a result of these actions, areas of the PRNS, GGNRA and Marin County, which overlap with Sanctuary boundaries are now off limits to MPWC. The PRNS, GGNRA and the county of Marin decided that continued use of this area by MPWC would have resulted in an unacceptable risk to sensitive resources in the area.

Historically, there were four MPWC launch sites used to access Sanctuary waters—Lawson's Landing at Dillon Beach, Millerton Point Park, Inverness, and Bodega Harbor. As of 1 November 1998, launching MPWC from Golden Gate National Recreation Area (GGNRA) or Point Reyes National Seashore (PRNS) is prohibited (U.S. Dept. of Interior, 1998 a & b). Millerton Point Park and Inverness are within GGNRA and PRNS boundaries, respectively, and therefore can no longer be used. As a result of the Marin County ordinance, Lawson's Landing is no longer a legal launch site for MPWC, and Tomales Bay and portions of Bodega Bay are now off limits to MPWC. Also, all coastal waters within three miles of shore in Marin County are off limits to MPWC operation. This area overlays the eastern edge of the GFNMS. The only remaining legal MPWC launch site into the Sanctuary is now from Bodega Harbor in Sonoma County, which is not within the jurisdictional boundary of the Marin County ordinance.

With Marin County's recent action banning MPWC operation (Marin County ordinance 3302) within three miles of its shore, if NOAA were to maintain the previously proposed 1000 yard buffer, MPWC would be able to exit Bodega Harbor and operate only in a 0.4 square mile area in Bodega Bay. This area lies in the vessel access route in front of the entrance to Bodega Harbor creating a potential hazard for vessels going in and out of Bodega Harbor. Fog and low visibility are a part of the typical weather pattern for this area during most of the year. If MPWC entered the Sanctuary from a vessel or from a launch site north of the Sanctuary such as the Salmon Creek area (four miles south) they would be operating in the gray whale migration corridor and in important feeding and resting areas for marine mammals and seabirds. This transit from the north into the Sanctuary would also take them through a state marine preserve at Horseshoe Cove which is also designated an Area of Special Biological Significance (ABS). Through only a small portion of the ABS is in the Sanctuary, within the 1000 yard zone, such activity by MPWC could have negative effects on Sanctuary resources.

If the Sanctuary takes no action, MPWC could depart from Bodega Habor. After leaving the harbor, they could turn due west, to avoid Marin County's restricted area, and pass over the dangerous Bodega rock shoal to get offshore. Because of the shallow water over the shoal, ocean swells build and break unpredictably in this area. In the past, several boats have capsized and people have died in this unpredictable and dangerous area. Beyond the shoal, MPWC could exit the Sanctuary at Bodega Head by going north or get into the Sanctuary's offshore waters by continuing west. Both require passing in the vicinity of the state's ABS mentioned earlier. MPWC would then be operating in the same biologically rich area including the gray whale migration corridor.

Another option would be for MPWC to use the nearshore shore areas in Bodega Bay. Because of the Marin County ban, MPWC users would be restricted to the northern crescent of Bodega Bay adjacent to the county recreational area at Doran Beach. Doran Beach offers camping and attracts large weekend crowds on hot days. The protected nature of Doran Beach, in the lee of Bodega Head makes it a popular spot for swimming and other water sport activities. Recreational fisherman in small skiffs use this area for sportfishing and crabbing. Two public launch sites in Bodega Harbor offer easy access to these protecting nearshore waters. On windy days, the nearshore area off Doran Beach is a popular spot for windsurfers and sailboats. Operation of MPWC in this area increases the potential for conflict with other recreational users. The ability of MPWC to operate very close to shore (due to the shallow draft) and move in unpredictable ways may be detrimental to the safety and aesthetic experience of those conducting more benign recreational activities. NOAA believes that MPWC operation in offshore and nearshore areas of the Sanctuary creates a user conflict that can be avoided by prohibiting the use of MPWC in the Sanctuary. Operating MPWC in the nearshore area of Bodega Bay also places MPWC in an environmentally sensitive habitat close to observed gray whale feeding areas.

After considering the comments in response to NOAA's April 23, 1999, proposed rule, reviewing new MPWC regulations for agencies with contiguous and overlapping jurisdictional boundaries, and considering the increased sitings for federally threatened southern sea otters and numbers of gray whales feeding in Bodega Bay, new listings for salmon and steelhead, and requirements for the protection of the Sanctuary's biological resources, the Sanctuary has determined that a total ban on MPWC is necessary to adequately protect Sanctuary resources. This proposed rule would ensure that Sanctuary resources and qualities are not adversely impacted and would help avoid conflicts among various users in the Sanctuary. A total ban on MPWC within the GFNMS is the most effective, safe and enforcement regulations that ensures Sanctuary resource protection.

II. Comments and Responses on Notice of Inquiry/Request for Information

The following is a summary of comments received on the Request for Information, and NOAA's responses.

Against Regulations:

1. Comment: NOAA has mischaracterized the level and pattern of MPWC use in the Sanctuary.

NOAA Response: NOAA disagrees. NOAA has solicited from the public and all launchsite owners the amount of use of MPWC in the Sanctuary. MPWC use in the Sanctuary is increasing at a time when marine mammal occurrence is expanding in duration of stay, numbers, species and location. Regulations banning MPWC use in adjoining Marin County, MCOSD, Point Reyes National Marine Seashore, Golden Gate National Recreational Area, and in the Monterey Bay National Marine Sanctuary leave the GFNMS resources vulnerable to increased interactions among MPWC and marine mammals, sea birds, shore birds, wading birds, and other Sanctuary resources and users.

2. Comment: NOAA's attempt to paint MPWCs as the primary source of fuel emissions in air and water in the Sanctuary is based on erroneous and outdated assumptions.

NOAA Response: NOAA disagrees. NOAA has not tried to paint MPWC as the primary source of fuel emissions in air and water in the Sanctuary, however MPWC are a source of fuel emissions. NOAA has considered the most current information available in its deliberations regarding the regulation of MPWC in the Sanctuary. Much of the information is from 1997 and 1998 data. The sources are reliable and respected in their fields, and have knowledge and experience in the Gulf of Farallones National Marine Sanctuary.

3. Comment: NOAA's suggestion that MPWC are operated at ''fast'' speed,

[1] On 14 January 2000 the California Coastal Commission (CCC) approved, on a 90-day emergency basis, the Marin County ban, which the CCC subsequently extended for an additional 90 days on 17 March 2000. The CCC will likely vote on whether to permanently approve the Marin County rule in May, 2000.

''close'' to shore does not support the proposed 1000 yard restriction.

NOAA Response: NOAA disagrees. NOAA believes that these activities are not only detrimental to marine life in the 1000 yard zone, but to the entire Sanctuary as well. This was arrived at after a review of the literature, consideration of all comments, review of regulations of areas with contiguous boundaries, and the latest biological information. Therefore, NOAA agrees that the 1000 yard restriction be changed to a prohibition within the Sanctuary as the only way to adequately protect all sea birds, marine mammals and other resources within this marine ecosystem.

4. Comment: NOAA's assertion that MPWCs have disturbed the natural quiet and aesthetic appreciation in the ''nearshore'' does not support the proposed restriction on MPWC use.

NOAA Response: NOAA disagrees. Noises from MPWC have been noted in many comments and have detrimentally affected the enjoyment of other Sanctuary users. The MPWC Industry cites other vessels which make similar or greater noise than MPWC. However, MPWC may be perceived as being louder than other boats because they can travel faster, closer to shore, often travel in groups, tend to frequently accelerate and decelerate, and wake-jump. These characteristics create uneven, persistent noise apparently more bothersome to people and potentially to wildlife. Research indicates that the constancy of speed figures into noise generation, as most people adjust to a constant drone and cease to be disturbed by it, even at elevated levels, but the changes in loudness and pitch of MPWC are more disturbing to people than other watercraft (Wagner 1994). In addition, many MPWC have had mufflers removed which greatly changes their noise output.

5. Comment: NOAA's description of recreational use patterns in the Sanctuary belies its assertion that MPWCs have interfered with other recreational uses.

NOAA Response: NOAA disagrees. After consideration of public comment on this issue, including testimony at public hearings relative to MPWC use in or adjacent to the Sanctuary, NOAA has determined that MPWC conflict or pose the potential to conflict with other recreational uses such as swimming, kayaking, recreational fishing, boating and wildlife viewing.

6. Comment: The referenced studies regarding disturbance of water fowl and seabirds do not support NOAA's proposed restriction on MPWC use.

NOAA Response: NOAA disagrees. Scientific research indicates that even at slower speeds, MPWC are a significantly stronger source of disturbance to birds than more conventional motorboats. Levels of disturbance can be further increased when MPWC are used at high speeds or outside of established boating channels. Seabirds such as common murres and sooty shearwaters often form large aggregations on the surface of the ocean. Feeding aggregations of sooty shearwaters can often number in the thousands and cover significant offshore area. These feeding flocks are ephemeral in nature and their movement is dictated by the availability of their prey. After review of the literature, consideration of all comments, review of regulations of areas with contiguous boundaries, and the latest biological information, NOAA believes that the proposed restriction of MPWCs from coming within 1,000 yards of shore would be inadequate to protect all sea birds and marine mammals. Therefore, NOAA has proposed a prohibition on the operation of MPWC in the Sanctuary.

7. Comment: The proposed MPWC restriction is not necessary to protect marine mammals.

NOAA Response: As identified in numerous comments on NOAA's proposed rule, as well as in response to NOAA's notice of inquiry/request for information (8/21/97), there are significant concerns regarding the effects of MPWCs on living resources dependent upon the vitality of Sanctuary resources. Marine mammals currently at risk from MPWCs include southern sea otter (Enhydra lutris), blue whales (Blaenoptera musculus), humpback whales (Megaptera novaeangliae), gray whales (Eschrichtius robustus), Guadalupe fur seal (Arctocephalus townsendi), northern fur seal (Callorhinus ursinus), Steller sea lions (Eumetopias jubtus), and harbor porpoise (Phocoena phocoena). All of these animals move freely through the Sanctuary, four are listed as threatened or endangered.

Another recent change (1997, 1998, & 1999) has been that gray whales are staying in GFNMS during the summer and feeding in Bodega Bay and around the Farallon Islands. This new behavior in Bodega has increased from zero (0) in 1994 to at least 12 animals in 1999. Gray whales and MPWCs use the same areas, but whales have not been seen when MPWCs are using the area. Other animals of concern are Guadalupe fur seals (threatened) which have been seen on the Farallon Islands since 1993. This is a new species for this area. Steller sea lions (threatened) haul out and use the Farallon Islands and Point Reyes area transit all areas of the Sanctuary.

The latest (July 1999) uncommon behavior observed was for the endangered blue whales. These animals have almost always been observed offshore over depths greater than 100 fathoms. This year blue whales have been consistently seen within the area east of the Farallon Islands over depths of 40 to 50 fathoms and in July 1999 blue whales were seen one nautical mile off Chimney Rock over a depth of 20 fathoms.

Humpback whales have also been present one to two miles off Pt. Reyes. The observations of all these marine mammals (four are threatened and endangered species) were in areas outside of 1,000 yards. These animals require protection from MPWC in order to allow alternatives for them as populations move or increase and other areas are abandoned or become fully utilized.

As stated clearly by the MPWC industry in their comments, existing laws are not being followed by all MPWC operators and are also not enforced. Interactions of MPWCs with marine mammals, as well as with shore birds, wading birds and swimmers, are already illegal under federal, state or local statute, but still occur. A total prohibition will provide a clear and simple enforceable rule within the GFNMS.

Research has demonstrated that impacts resulting from MPWC use tend to be concentrated locally, producing more geographically limited, yet potentially more severe effects than would occur with other motorboats which are less maneuverable than MPWC [See DEA, Section III, Summary of Effects of MPWC on Marine Resources, for an expanded discussion (Snow, 1989).]

8. Comment: NOAA is mistaken in assuming MPWCs are predominantly used in an ''aggressive'' manner and points to no specific accidents or injuries involving other sanctuary users.

NOAA Response: NOAA did not use the term ''aggressive'' in the preamble to the proposed regulation.

9. Comment: NOAA's assertion that MPWCs pose a hazard to other water users because of a disproportionate risk of accidents is unreliable.

NOAA Response: NOAA reviewed published reports (U.S. Coast Guard, 1999) and considered various accident data and statistics that showed MPWCs are involved in a higher percentage of accidents than other types of watercraft.

10. Comment: NOAA cannot reasonably base its proposed prohibition of MPWC use within 1000 yards of

shore on unconfirmed, and in some cases unwritten, personal ''documentation'' and ''communication'' regarding interference with swimmers, kayakers and other recreational users of ''nearshore'' areas.

NOAA Response: NOAA disagrees. NOAA's decision to ban MPWC use within the Sanctuary is not solely based on interference with swimmers, kayakers and other recreational users of nearshore area. Evidence of MPWC's negative impact on marine resources in the Sanctuary is the primary concern to NOAA. However, because of U.S. Coast Guard statistics and reports of MPWC jeopardizing the well-being of swimmers, kayakers, canoeists, and other recreational boaters and users of nearshore areas of the Sanctuary, NOAA has determined that a prohibition on the operation of MPWC is the most prudent alternative to adopt for this sanctuary.

11. Comment: Responsible users do not chase or harass marine life; do not disrupt residents or businesses on the shore-line with high speed cruising; support restrictions on speed [and all watercraft] within 100–200 ft. of shore. MPWC operate within EPA noise and emissions requirements.

NOAA response: NOAA disagrees. Responsible users may not intentionally harass wildlife, but unintentional disturbance to wildlife from MPWC operation has the same negative impacts. See responses above for MPWC effects—intentional or unintentional. Testimony and comments from local residents contend that MPWC are disruptive. See response to comment 11 regarding enforcement and response to comment 4 addressing noise.

For Regulation:

12. Comment: MPWC should be completely prohibited throughout all of the Sanctuary. Do not establish an access corridor to launch at Bodega Harbor.

NOAA response: NOAA agrees. As discussed earlier, based on new and recent regulations for areas with contiguous and overlapping boundaries, the latest biological information on impacts of MPWC in offshore areas, as well as conflicts with other Sanctuary users, NOAA has determined that a Sanctuary-wide prohibition on the operation of MPWC is necessary and the best way to adequately protect the Sanctuary's resources. The GFNMS agrees with the concern that although restricting MPWC from coming within 1,000 yards of the shore would protect shore birds and wading birds, the Sanctuary resources that lie outside of this zone would remain at risk.

13. Comment: Golden Gate National Recreation Acrea (Park) has banned use of MPWC; Sanctuary (NOAA) should do the same.

NOAA response: NOAA agrees. The GFNMS boundaries are contiguous and overlap with the Point Reyes National Seashore (PRNS) and the Golden Gate National Recreational Area (GGNRA) which both prohibit MPWC use in their waters. The Marin County Open Space District (MCOSD) also shares management authority with GFNMS on Bolinas Lagoon where MPWC operation is also prohibited by the MCOSD. As of 25 October 1999, the County of Marin enacted an ordinance for the total ban of MPWC within three statute miles (15,840 ft.) of the ocean shore and all tributaries flowing into the ocean up to seven miles inland. This precludes MPWC operation in a large portion of the new shore area where County and Sanctuary jurisdictional boundaries overlap. NOAA concurs with and supports the other agencies assessment of resource impacts and user concerns created by the operation of MPWC in the marine environment of this area.

14. Comment: MPWC cause unacceptable pollution in the Sanctuary, particularly because propulsion by two-stroke engine results in oil exhaust direct to water.

NOAA response: NOAA agrees. MPWC are powered by a jet-propelled system that typically involves a two-stroke engine with an exhaust expulsion system that vents directly into the water. The two-stroke engines found on the vast majority of MPWC in the United States discharge more of their fuel (ranging from 10% to more than 50% of the unburned fuel/oil mixture, depending on manufacturing conditions and operating variables) than the four-stroke engines found on conventional recreational boats (Tahoe Research Group 1997). These emissions pose a serious threat to the environment, as two-stroke engines introduce more volatile organic compounds (by a factor of 10) into the water than four-stroke engines (Juttner *et al.* 1995; Tjarnlund *et al* 1995). These emissions can have significant adverse impacts in all areas of the Sanctuary.

15. Comment: MPWC cause unacceptable noise levels, which disturb marine wildlife (marine mammals, seabirds) as well as human visitors to the Sanctuary.

NOAA response: In general, unless modified by the operator (*i.e.*, removal or alteration of the muffler), MPWC do not appear to be any louder in the air than similarly powered conventional motorized watercraft (MPWC and conventional watercraft both registered between 74 and 84 decibels in tests conducted in 1990) (Woolley 1996) and appear to be quieter underwater (Gentry 1996). However, many MPWC operators alter or remove the mufflers to enhance craft performance, thus increasing the noise generated by their craft. Also, MPWC may be perceived as being louder than other boats because they can travel faster, closer to shore, often travel in groups, tend to frequently accelerate and decelerate, and wake-jump. These characteristics create uneven, persistent noise apparently more bothersome to people and potentially to wildlife. In addition, research indicates that the constancy of speed figures into noise generation, as most people adjust to a constant drone and cease to be disturbed by it, even at elevated levels, but the changes in loudness and pitch of MPWC are more disturbing to people than other watercraft (Wagner 1994).

16. Comment: Speed and mobility of MPWC cause negative effects on marine mammals and aquatic birds. Wildlife are not able to anticipate movement and may also cause susceptibility to disease and injury.

NOAA response: NOAA agrees. Research in Florida indicates that MPWC cause wildlife to flush at greater distances, with more complex behavioral responses than observed in disturbances caused by automobiles, all-terrain vehicles, foot approach, or motorboats. This was partially attributed by the scientists to the typical operation of MPWC, where they accelerate and decelerate repeatedly and unpredictably, and travel at fast speeds directly toward shore, while motor boats generally slow down as they approach shore (Rodgers 1997). Scientific research also indicates that even at slower speeds, MPWC were a significantly stronger source of disturbance to birds than were motor boats. Levels of disturbance were further increased when MPWC were used at high speeds or outside of established boating channels (Burger 1998). There is a general conclusion that marine mammals are more disturbed by watercraft such as MPWC, which run faster, on varying courses, or often change direction and speed, than they are by boats running parallel to shore with no abrupt course or major speed change.

Researchers note that MPWC may be disruptive to marine mammals when they change speed and direction frequently, are unpredictable, and may transit the same area repeatedly in a short period of time. In addition, because MPWC lack low-frequency long distance sounds underwater, they do not signal surfacing mammals or birds of approaching danger until they are

very close to them (Gentry 1996; Osborne 1966). Documented disturbance effects of MPWC on marine mammals could include shifts in activity patterns and site abandonment by harbor seals and Steller sea lions; site abandonment by harbor porpoise; injuries from collisions; avoidance by whales and mortality of endangered southern sea otters (Gentry 1996; Richardson et al. 1995, Anonymous 1990).

17. Comment: MPWC cause the disturbance of wildlife in the Sanctuary.

NOAA response: NOAA agrees. Many seabirds and marine mammals use the surface layer of the ocean within the GFNMS for resting and feeding opportunities. Common murres, loons, cormorants, grebes, auklets, and phalaropes are some of the seabirds that float on the surface of the ocean while resting or before diving and pursuing prey. These seabirds are at an increased risk from MPWC because MPWC operation causes disturbance and more complex behavioral responses from seabirds and at greater distances than that observed for motorboats (Rodgers 1997). One speaker at the public hearing testified that he and others observed six gray whales one afternoon loitering near the mouth of Tomales Bay for the afternoon. The next day, six MPWC were operating in the exact area where the gray whales had been. The gray whales had left the area. While this information is anecdotal, it is an indication that the presence of whales and MPWC operation are not compatible. When viewed in light of Gentry's (1996) work, MPWC activity may prevent wildlife from using necessary habitat.

18. Comment: MPWC will cause disruption of nesting, breeding, and feeding areas of seabirds.

NOAA response. NOAA agrees. Research notes that declining nesting success of grebes, coots, and moorhens in the Imperial National Wildlife Refuge were due to the noise and physical intrusion of MPWC (Snow 1989). In addition, MPWC have been observed flushing wading birds and nesting osprey from their habitat, contributing to abnormally high numbers of abandoned osprey nests on certain islands in the Florida Keys (U.S. Fish and Wildlife Service 1992). The number of active osprey nests in the lower Florida Keys ''backcountry'' dropped from five to zero between 1986 and 1999. Biologists believe this was due to MPWC flushing parents from the nests (Cuthbert and Suman 1995). Research suggests that declines in nesting birds in some states occurred simultaneously with MPWC operation. Numerous shoreline roost sites exist within the Sanctuary, and research has shown that human disturbance at bird roost sites can force birds to completely abandon a nesting area. Published evidence strongly suggests that estuarine birds may be seriously affected by even occasional disturbance during key parts of their feeding cycle, and when flushed from feeding areas, such as eelgrass beds, will usually abandon the area until the next tidal cycle (Kelly 1997). Nearshore areas in Bodega Bay, Sonoma County, provide important foraging habitat for shorebirds and waterfowl along the Pacific flyway. The Farallon Islands, located in San Francisco County, support the largest concentration of breeding seabirds in the continental United States. Several species of diving birds that nest on the Farallon Islands use the offshore areas of the Sanctuary to forage. These animals float on the surface of the water between repeated dives for food. MPWC operating in this offshore habitat would certainly disrupt seabirds foraging for prey to bring back to their young in nests.

19. Comment: MPWC will cause disruption of marine mammals; will allow jet skis to be used in part of gray whale migration route.

NOAA response: NOAA agrees. There is a general conclusion that marine mammals are more disturbed by watercraft such as MPWC, which run faster, on varying courses, or often change direction and speed, than they are by boats running parallel to shore with no abrupt course or major speed change. Researchers note that MPWC may be disruptive to marine mammals when they change speed and direction frequently, are unpredictable, and may transit the same area repeatedly in a short period of time. In addition, because MPWC lack low-frequency long distance sounds underwater, they do not signal surfacing mammals or birds of approaching danger until they are very close to them (Gentry 1996; Osborne, 1996). Possible disturbance effects of MPWC on marine mammals could include shifts in activity patterns and site abandonment by harbor seals and Steller sea lions; site abandonment by harbor porpoise; injuries from collisions; and avoidance by whales (Gentry 1996; Richardson *et al.* 1995). The gray whale migration corridor passes directly through the GFNMS. Twice a year gray whales pass through the Sanctuary on their migration between wintertime calving grounds in Mexico and summer feeding grounds in Alaska. In spring, mothers and calves travel in pairs close to shore. Since the whale migration corridor passes through the entire Sanctuary in a north-south direction, but varies in distance from shore, there is no way to distance MPWC from the migrating whales. In addition, the GFNMS is a destination feeding area for the endangered blue and humpback whales. Each summer these whales migrate to the GFNMS to feed on abundant swarms of krill found in the surface layers in the Gulf of the Farallones. It is critical that these whales feed enough in the summer and fall to sustain them through their migration and winter reproductive season. Disturbance from MPWC could reduce feeding opportunities and have serious consequences for these endangered populations. Endangered blue whales were observed feeding two miles off of the Point Reyes headlands during July of 1999. This is unusually close to shore for these animals, whose numbers in the area comprise a major concentration for the world, and who normally forage farther offshore. This unpredictable blue whale feeding activity demonstrates the necessity for protecting all of the Sanctuary's waters. Other jurisdictions have regulated MPWC specifically to protect marine mammals (*e.g.*, Hawaii).

20. Comment: Proposed rule will leave 95% of the Sanctuary unprotected [from the effects of jet skis]

NOAA response: NOAA agrees. NOAA's initial proposal of a 1000 yd. buffer would leave 95% of the Sanctuary open for MPWC operation. The Sanctuary was created in 1981 to protect and preserve the extraordinary ecosystems, including marine birds, mammals, and other natural resources of the waters surrounding the Farallon Islands and Point Reyes, and to ensure the continued availability of the area as a research and recreational resource. As discussed throughout this document, information supports a need to address the impacts of MPWC operation throughout the Sanctuary. As the public trustee for these important resources, it would be inadequate for the Sanctuary to leave resources at risk in 95% of the GFNMS and therefore NOAA has proposed a prohibition of the operation of MPWC in the entire Sanctuary.

21. Comment: MPWC use disturbs others using the Sanctuary and would cause danger to individual swimmers [and other boaters] in the Sanctuary.

NOAA response: NOAA agrees. The Sanctuary encourages multiple uses of its waters that are compatible with resource protection. When used as designed and in the current manner, MPWC have significant potential to interfere with a large number of other Sanctuary users. Numerous respondents to the proposed rule noted that MPWC

were interfering with, and often jeopardizing the well-being of, swimmers, kayakers, canoeists, and other recreational boaters and users of the Sanctuary. MPWC have been involved in numerous accidents, and thus pose a hazard to other water users. Although MPWC make up approximately 11% of vessels registered in the country (U.S. Dept. of Interior 1998c), Coast Guard statistics show that in 1996, 36% of all watercraft involved in accident were MPWC (U.S. Coast Guard 1999). In addition, numerous commentors noted that the operation of MPWC in the Sanctuary diminishes the aesthetic qualities of many beach and recreational areas, and may interfere with other economic uses of the areas based upon these aesthetic qualities.

22. Comment: A partial ban would be too hard to enforce; covering all of the Sanctuary would be more clear to jet ski users and to enforcement personnel.

NOAA response: NOAA agrees. With the implementation of the Marin County ban that regulates MPWC three miles shore, enforcing boundary violations would be difficult. Because the Sanctuary does not have enforcement personnel to staff a boat patrol at the three mile boundary and MPWC are not equipped with navigational equipment it would be impossible to enforce boundary violations. Before the Marin County ban, there was difficulty enforcing the Point Reyes National Seashore's (PRNS) quarter mile restriction. Despite local riders attempt at self-policing and creating no ride zones, violations were chronic and regulations were hard to enforce. This occurred in PRNS that has enforcement personnel on staff. A total prohibition will provide a clear and simple enforcement rule within the GFNMS.

III. Summary of Proposed Regulations

Amendments to the GFNMS regulations are proposed in this rulemaking as follows:

The addition to 15 CFR 922.82(a) of a prohibition against operation of MPWC in the Sanctuary. The prohibition would include an exception for the use of MPWC for emergency search and rescue and law enforcement (other than training activities) by Federal, State and local jurisdictions.

An amendment to 15 CFR 922.81 to add a definition of ''motorized personal watercraft.'' ''Motorized personal watercraft'' would be defined as ''a vessel which uses an inboard motor powering a water jet pump as its primary source of motive power and which is designed to be operated by a person sitting, standing, or kneeling on the vessel, rather than the conventional manner of sitting or standing inside the vessel''.

IV. Miscellaneous Rulemaking Requirements

Executive Order 12866: Regulatory Impact

This proposed rule has been determined to be not significant for purposes of Executive Order 12866.

Regulatory Flexibility Act

The Chief Counsel for Regulation of the Department of Commerce certified to the Chief Counsel for Advocacy of the Small Business Administration that the proposed rule, if adopted as proposed, would not have a significant economic impact on a substantial number of small entities, as follows:

> The proposed rule would amend the Gulf of the Farallones National Marine Sanctuary (GFNMS or Sanctuary) regulations to prohibit the operation of motorized personal watercraft in the Sanctuary. The proposed rule would ensure that Sanctuary resources and qualities are not adversely impacted and would help avoid conflicts among various users of the Sanctuary.
>
> There is currently one legal launch location for MPWC operation in the Sanctuary at Bodega Harbor in Sonoma County. Combined data from Marin County and Sonoma County estimates 20 MPWC users and approximately 200 launches per year. With the Marin County ban issued in October of 1999, it's estimated the Sonoma County parks would lose a launch fee of $5 dollars per launch for an estimated 100 launches form Bodega Harbor for a total loss of $500 dollars. This is a minor portion of the total revenues for the County park at Doran Beach. Consequently, the rule is not expected to have a significant economic impact on a substantial number of small entities.

Accordingly, a Regulatory Flexibility Analysis was not prepared.

Paperwork Reduction Act

This proposed rule would not impose an information collection requirement subject to review and approval by OMB under the Paperwork Reduction Act of 1980, 44 U.S.C. 3500 *et seq.*

National Environmental Policy Act

NOAA has concluded that this regulatory action does not constitute a major federal action significantly affecting the quality of the human environment. Therefore, an environmental impact statement is not required. A draft environmental assessment has been prepared. It is available for comment from the address listed at the beginning of this notice.

Bibliography

Anonymous. 1990. Draft Environmental Impact Statement, Monterey Bay National Marine Sanctuary. Marine and Estuarine Management Division, National Oceanic and Atmospheric Administration. Washington D.C. Volume 1

Ballestero, T.P. 1990. Impact of motor boat and personal watercraft on the environment: bibliography. Environmental Research Group, University of New Hampshire. Durham, New Hampshire. 25pp

Bakun A. 1973. Coastal Upwelling indices, west coast of North America 1946–1971. NOAA Tech. Report. NMFS SSRF 671, 103pp

Burger, J. 1998. Effects of motorboats and personal watercraft on flight behavior over a colony of common terns. Condor, 100 (3): 528–534

Cuthbert, A. and D. Suman. 1995. To jet ski or not to jet ski: personal watercraft conflicts in the lower Florida Keys, in Suman, D., M. Shivlani, and M. Villanueva, eds. Urban growth and sustainable habitats, Division of Marine Affairs and Policy, Rosenstiel School of Marine and Atmospheric Science, University of Miami, Miami, Florida

Fox, K.J., President, Tomales Bay Association, Point Reyes Station, California. Personal communication, Sept. 25, 1997

Gentry, R. 1996. Motorized Personal Water Craft and Marine Mammal Populations in Washington Sound, Washington. Technical paper

Juttner, F., D. Backhaus, U. Matthias, U. Essers, R. Greiner, and B. Mahr. 1995. Emissions of Two- and Four-Stroke Outboard Engines—I. Quantifications of Gases and VOC. Wat. Res. Vol. 29, No. 8, 1976–1982

Kelly, J., Resident Biologist, Audubon Canyon Ranch, Marshall, California. Personal communication, Sept. 25 1997

Kieckhefer T.R. 1992. Feeding Ecology of Humpback Whales in Continental Shelf Waters Near Cordell Bank, California. Masters Thesis, Moss Landing Marine Laboratories, San Jose State University, California

Klimley A.P. and D.G. Ainley eds. 1996. Great White Sharks—The Biology of Carcharodon carcharias. Academic Press. 517pp

Long, R., 1997. Polluting for Pleasure: Part II. Sail, January 1997

Miller, G. and M. Fiore. 1997. Preliminary Study on Gasoline Constituents in Lake Tahoe, Summer, 1997. Environmental and Resources Sciences Department, University of Nevada, Reno

National Oceanic and Atmospheric Administration. 1992. Monterey Bay National Marine Sanctuary Final Environmental Impact Statement and

Final Regulations. 57 FR 43310 (Sept. 18, 1992)
National Research Council. 1996. Toxicological and Performance Aspects of Oxygenated Motor Vehicle Fuels. National Academy Press
Osborne, R. 1996. Testimony and Exhibits Submitted to Board of County Commissioners Regarding Restrictions on Use of Jet Skis in San Juan County. Superior Court of Washington for Whatcom County
Peterson, R.T. 1990. Western birds. Peterson field guides. Houghton Mifflin Company
Richardson, J.W., C.R. Greene, Jr., C.I. Malme, and D.H. Thomson. 1995. Marine Mammals and Noise. Academic Press, San Diego, CA
Rodgers, J.A. and H.T. Smith. 1997. Buffer zone distances to protect foraging and loafing waterbirds from human disturbance in Florida. Wildlife Soc. Bull., 25(1):139–145
Snow, S. 1989. A Review of Personal Watercraft and Their Potential Impact on the Natural Resources of Everglades National Park. Technical paper
Smith, D.E. and P.B. Adams. 1988. Daytime Surface Swarms of Thysanoessa spinifera (Euphausiacea) in the Gulf of the Farallones, California. Bull. of Marine Science 42(1):76–84
Squillace, P.J., J.F. Pankow, N.E. Korte, and J.S. Zogorski. 1996. Environmental Behavior and Fate of Meth tert-Butyl Ether (MTBE). U.S. Geological Survey Fact Sheet F5–203–96
Sutherland, A.J. and D.G. Ogle. 1975. Effect of jet boats on salmon eggs. N.Z. Journal of Marine and Freshwater Research, 9(3):273–82
Tahoe Research Group. 1997. The Use of 2-Cycle Engine Watercraft on Lake Tahoe: Water Quality and Limnological Considerations. University of California, Davis
Tjarnlund, U., G. Ericson, E. Lindesjoo, I. Petterson, and L. Balk. 1995. Investigation of the Biological Effects of 2-Cycle Outboard Enginesı Exhaust on Fish. Marine Environmental Research. 39, 313–316
U.S. Coast Guard. 1999. Recreational Boating Accident Statistics 1995 and 1996. www.uscgboating.org/stats.html. Accessed Feb. 1999
PWIA vs. Department of Commerce, 48 F.3d 540 (D.C. Cir. 1995)
U.S. Department of the Interior. 1998a. Golden Gate National Recreation Area. Code of Federal Regulations, Title 36, Chapter 1, compendium amendment and Administrative Record
U.S. Department of the Interior. 1998b. Point Reyes National Seashore. Code of Federal Regulations, Title 36, Chapter 1, compendium
U.S. Department of the Interior. 1998c. Proposed Rule: Personal Watercraft Use Within the NPS System. 63 FR 49312 (Sept. 15, 1998)
U.S. Fish and Wildlife Service. 1992. Management Agreement for the Florida Keys Refuges—Monroe County, Florida
Wagner, K.J. 1994. Of hammacks and horsepower: the noise issue at lakes. Lakeline, June 1994, pp. 24–28
Wing. S., J.L. Largier, L.W. Botsford, and J.F. Quinn. 1995. Settlement and transport of benthic invertebrates in an intermittent upwelling region. Limnol. and Oceanogr., 40(2) 316–329
Woolley, T. 1996. Testimony prepared for the Superior Court of Washington for Whatcom County

List of Subjects in 15 CFR Part 922

Administrative practice and procedure, Coastal zone, Education, Environmental protection, Marine resources, Penalties, Recreation and recreation areas, Reporting and recordkeeping requirements, Research.

Dated: May 16, 2000.

Ted Lillestolen,

Deputy Assistant Administrator, Ocean Services and Coastal Zone Management.

Accordingly, for the reasons set forth above, 15 CFR Part 922, Subpart H, is proposed to be amended as follows:

PART 922, SUBPART H—THE GULF OF THE FARALLONES NATIONAL MARINE SANCTUARY

1. The authority citation for Part 922 continues to read as follows:

Authority: 16 U.S.C. 1431*et seq.*

2. Section 922.18 is amended by adding the following definition, in the appropriate alphabetical order.

§ 922.81 Definitions.

* * * * *

Motorized personal watercraft means a vessel which uses an inboard motor powering a water jet pump as its primary source of motive power and which is designed to be operated by a person sitting, standing, or kneeling on the vessel, rather than the conventional manner of sitting or standing inside the vessel.

3. Section 922.82 is amended by adding new paragraph (a)(7) as follows:

§ 922.82 Prohibited or otherwise regulated activities.

(a) * * *

(7) Operation of motorized personal watercraft, except for the operation of motorized personal watercraft for emergency search and rescue mission or law enforcement operations (other than routine training activities) carried out by National Park Service, U.S. Coast Guard, Fire or Police Departments or other Federal, State or local jurisdictions.

* * * * *

[FR Doc. 00–12797 Filed 5–19–00; 8:45 am]

BILLING CODE 3510–08–M

ENVIRONMENTAL PROTECTION AGENCY

40 CFR Part 52

[MN60–01–7285b; FRL–6703–2]

Approval and Promulgation of Implementation Plans; Minnesota

AGENCY: Environmental Protection Agency (EPA).

ACTION: Proposed rule.

SUMMARY: We are proposing to approve a site specific revision to the Minnesota particulate matter (PM) State Implementation Plan (SIP) for LTV Steel Mining Company, formerly known as Erie Mining Company, located in St. Louis County, Minnesota. In its submittal, the State has requested that we remove the Stipulation Agreement for Erie Mining Company from the Minnesota SIP. In the final rules section of this **Federal Register**, we are conditionally approving the SIP revision as a direct final rule without prior proposal, because we view this as a noncontroversial revision amendment and anticipate no adverse comments. A detailed rationale for the approval is set forth in the direct final rule. If no adverse comments are received in response to this rule, no further activity is contemplated in relation to this proposed rule. If we receive adverse comments, the direct final rule will be withdrawn and all public comments received will be addressed in a subsequent final rule based on this proposed rule. We will not institute a second comment period on this action. Any parties interested in commenting on this action should do so at this time.

DATES: Comments must be received by June 21, 2000.

ADDRESSES: Written comments should be sent to: Carlton T. Nash, Chief, Regulation Development Section, Air Programs Branch (AR–18J), EPA Region 5, 77 West Jackson Boulevard, Chicago, Illinois 60604–3590.

FOR FURTHER INFORMATION CONTACT: Christos Panos, Regulation Development Section, Air Programs Branch (AR–18J), EPA Region 5, 77 West Jackson

Boulevard, Chicago, Illinois 60604, (312) 353–8328

SUPPLEMENTARY INFORMATION: For additional information, see the Direct Final rule which is located in the Rules section of this **Federal Register**. Copies of the request and the EPA's analysis are available for inspection at the above address. (Please telephone Christos Panos at (312) 353–8328 before visiting the Region 5 Office.)

Authority: 42 U.S.C. 7401 *et seq.*

Dated: April 27, 2000.

David A. Ullrich,

Acting Regional Administrator, Region 5.

[FR Doc. 00–12643 Filed 5–19–00; 8:45 am]

BILLING CODE 6560–50–P

ENVIRONMENTAL PROTECTION AGENCY

40 CFR Part 300

[FRL–6702–5]

National Oil and Hazardous Substances Pollution Contingency Plan; National Priorities List

AGENCY: Environmental Protection Agency.

ACTION: Notice of intent to delete the Schofield Army Barracks site from the National Priorities List.

SUMMARY: The Environmental Protection Agency (EPA) Region 9 announces the intent to delete the Schofield Army Barracks site (''the site'') from the National Priorities List (NPL) and requests public comment on this proposed action. The NPL constitutes appendix B of 40 CFR part 300 which is the National Oil and Hazardous Substances Pollution Contingency Plan (NCP), which EPA promulgated pursuant to section 105 of the Comprehensive Environmental Response, Compensation and Liability Act (CERCLA) of 1980, as amended. EPA and the State of Hawaii Department of Health have determined that the remedial action for the site has been successfully executed.

DATES: Comments concerning the proposed deletion of the Site from the NPL may be submitted on or before June 21, 2000.

ADDRESSES: Comments may be mailed to: Mark Ripperda, USEPA Region 9, 75 Hawthorne Street, San Francisco, CA 94105, Mail Code SFD–8–3.

Comprehensive information on this site is available through the Region 9 public docket which is available for viewing by appointment only. Appointments for copies of the background information from the Regional public docket should be directed to the EPA Region 9 docket office at the following address: Superfund Records Center, USEPA Region 9, 75 Hawthorne Street, San Francisco, CA 94105.

The deletion docket is also available at the following locations on Oahu: Wahiawa Public Library, 820 California Avenue, Wahiawa, Hawaii 96786; and Directorate of Public Works, Environmental Division, Bldg 105, 3rd Floor, Wheeler Army Airfield, Hawaii.

FOR FURTHER INFORMATION CONTACT: Mark Ripperda, USEPA Region 9, 75 Hawthorne Street, San Francisco, CA 94105, Mail Code SFD–8–3; phone (415) 744–2408.

SUPPLEMENTARY INFORMATION:

Table of Contents

I. Introduction
II. NPL Deletion Criteria
III. Deletion Procedures
IV. Basis of Intended Site Deletion

I. Introduction

The U.S. EPA Region IX announces its intent to delete the Schofield Army Barracks site in Honolulu County, Hawaii, from the National Priorities List (NPL) and requests public comment on this proposed action. The NPL constitutes appendix B of 40 CFR part 300 which is the National Oil and Hazardous Substances Pollution Contingency Plan (NCP), which EPA promulgated pursuant to section 105 of the Comprehensive Environmental Response, Compensation and Liability Act (CERCLA) of 1980, as amended. EPA identifies sites that appear to present a significant risk to public health, welfare, or the environment and maintains the NPL as the list of these sites. EPA and the State of Hawaii Department of Health have determined that the remedial action for the site has been successfully executed.

EPA will accept comments on the proposal to delete this site for thirty (30) days after publication of this document in the **Federal Register**.

Section II of this document explains the criteria for deleting sites from the NPL. Section III discusses the procedures EPA is using for this action. Section IV discusses the Schofield Army Barracks site and explains how the site meets the deletion criteria.

II. NPL Deletion Criteria

Section 300.425(e)(1) of the NCP provides that releases may be deleted from, or recategorized on the NPL where no further response is appropriate. In making a determination to delete a release from the NPL, EPA shall consider, in consultation with the appropriate State, whether any of the following criteria have been met:

(i) Responsible parties or other persons have implemented all appropriate response actions required; or

(ii) All appropriate Fund-financed responses under CERCLA have been implemented, and no further response action by responsible parties is appropriate; or

(iii) The Remedial Investigation has shown that the release poses no significant threat to public health or the environment and, therefore, remedial measures are not appropriate.

Even if a site is deleted from the NPL, where hazardous substances, pollutants, or contaminants remain at the site above levels that allow for unlimited use and unrestricted exposure, EPA's policy is that a subsequent review of the site will be conducted at least every five years after the initiation of the remedial action at the site to ensure that the site remains protective of public health and the environment. If new information becomes available which indicates a need for further action, EPA may initiate additional remedial actions. Whenever there is a significant release from a site deleted from the NPL, the site may be restored to the NPL without application of the Hazard Ranking System.

In the case of Schofield Army Barracks, the selected remedy is protective of human health and the environment. The Army will maintain the landfill cover and the water treatment system, and will perform long-term groundwater monitoring. The first five-year review will be conducted by EPA, the State of Hawaii Department of Health (HDOH), and the Army in the year 2002. Reviews will be conducted every five years thereafter.

III. Deletion Procedure

The following procedures were used for the intended deletion of this site: (1) All appropriate response under CERCLA has been implemented and no further action by EPA or the Army is appropriate; (2) HDOH has concurred with the proposed deletion decision; (3) a notice has been published in the local newspapers and has been distributed to appropriate federal, state, and local officials and other interested parties announcing the commencement of a 30-day public comment period on EPA's Notice of Intent to Delete; and (4) all relevant documents have been made available in the local site information repositories.

Deletion of the site from the NPL does not itself create, alter, or revoke any individual's rights or obligations. The NPL is designed primarily for

informational purposes and to assist Agency management. Section 300.425(e)(3) of the NCP states that the deletion of a site from the NPL does not preclude eligibility for future response actions.

EPA's Regional Office will accept and evaluate public comments on EPA's Notice of Intent to Delete before making a final decision to delete. If necessary, the Agency will prepare a Responsiveness Summary to address any significant public comments received.

A deletion occurs when the Regional Administrator places a final Notice of Deletion in the **Federal Register**. Generally, the NPL will reflect deletions in the final update following the Notice. Public notices and copies of the Responsiveness Summary will be made available to local residents by the Regional Office.

IV. Basis of Intended Site Deletion

The following site summary provides the Agency's rationale for the proposal to delete this site from the NPL.

Site Background and History

Schofield Barracks was established in 1908 to provide a base for the Army's defense of Pearl Harbor and the entire Island of Oahu. Initial construction of the post occurred between 1909 and 1917.

Schofield Barracks is headquarters for the 25th Infantry Division and 45th Support Group, and currently houses approximately 21,000 individuals. General operations performed at Schofield Barracks include administration, training, and small-scale industrial operations (vehicle repair and maintenance, weapons refinishing, laundering, electrical equipment service, sewage treatment, and municipal activities).

Schofield Barracks is in the north-central plateau of the Island of Oahu in the State of Hawaii. Schofield Barracks encompasses a total area of approximately 27.7 square miles and is divided into two sections, the East Range and the Main Post. Wheeler Army Airfield lies between the two Schofield Barracks sections. The town of Wahiawa is immediately north of the East Range. The town of Mililani is approximately 2 miles south of the East Range.

The recent history of reported groundwater contamination at Schofield Barracks began in April 1985, when the Army informed the Hawaii Department of Health (HDOH) that the industrial solvent trichloro-ethylene (TCE) was detected in wells supplying drinking water to Schofield Barracks at a concentration of approximately 30 parts per billion (ppb). In response to the detection of TCE in the water-supply wells, the Army installed an air-stripper treatment system in 1986 to remove TCE from the drinking water.

Schofield Barracks was placed on the NPL in September 1990 because of the risk posed to human health by the TCE contamination in a major drinking water aquifer. The Remedial Investigation identified two distinct plumes of TCE at Schofield; one originating from the on-base landfill and a larger plume originating in the East Range, several miles up-gradient from Schofield's municipal water supply wells. The East Range is a mountainous area marked by numerous deep ravines and heavy tropical vegetation. A distinct source was not found, though the general area of the source was defined by the monitoring well network and concentrations within the plume. The risk assessment concluded that the only risk to human health and the environment at Schofield under CERCLA was posed by the contaminated groundwater.

Response Actions

Overall, the remedial investigations and feasibility studies evaluated possible actions for four areas of the site: Operable Unit 1 (OU1) included the 10 most likely sources of the TCE contamination. Operable Unit 2 (OU2) included the groundwater plumes. Operable Unit 3 (OU3) included 34 additional possible sources of surface and subsurface contamination. Operable Unit 4 (OU4) included the Former Schofield Barracks Sanitary Landfill.

OU1 and OU3

The Record of Decision (ROD) for OU1, the most likely source areas, was signed by EPA on January 24, 1996. The ROD for OU3, the other possible source areas, was signed by EPA on November 8, 1996. Both RODs selected no action for these operable units because the remedial investigations showed that those areas were not currently sources of contamination to the groundwater. The remedial investigations produced no evidence that any of the sites in operable units 1 or 3 were originally sources of groundwater contamination. None of the sites in operable units 1 and 3 posed unacceptable risks to human health or the environment.

OU2

This operable unit consists of groundwater under Schofield Barracks that is contaminated with TCE. The Army, EPA and HDOH considered whether this contamination could be remedied within the aquifer or treated at the wellhead prior to the water being distributed for public use. The objectives for remediation are reducing risks to human health and the environment and satisfying applicable or relevant and appropriate requirements (ARARs). EPA determined that the federal drinking water standards, known as maximum contaminant levels (MCLs), are relevant and appropriate requirements within the aquifer. However, EPA may waive an ARAR where a selected remedy protects human health and the environment and it is technically impracticable to satisfy the requirement.

Remediation within the aquifer can be pursued either through natural attenuation or with some type of active treatment. While natural attenuation appears effective at confining the plume to its current configuration, the concentrations of TCE within the plume are decreasing too slowly for it to be considered a viable remedy. Active treatment of the groundwater is not practicable because of the hydrogeological conditions at the site. The depth to the water table is over 500 feet, the aquifer is composed of fractured volcanic rock, the aquifer is over 1000 feet thick, and approximately 120 million gallons of groundwater flow through the aquifer per day. Because of these conditions, the Army, EPA and HDOH concluded that treating the groundwater to achieve the MCL for TCE within the aquifer is technically impracticable. Therefore, EPA granted a technical impracticability (TI) waiver to this ARAR for OU2. However, the final remedy is fully protective of human health and the environment because the water will be treated before being distributed for public use.

The ROD for OU2, the groundwater aquifer, was signed by EPA on February 7, 1997. The selected remedy included the following actions:

- Continued treatment of contaminants in the Schofield Barracks Water Supply Wells by air stripping at the wellhead;
- The Army must consult with EPA and DOH prior to abandoning the water supply wells, because production at these wells may help to control plume migration;
- The Army must conduct semi-annual sampling and analysis of water supply wells, agricultural wells and monitoring wells in the region;
- The Army prepared plans to implement the contingency of wellhead treatment on water supply wells throughout the region. The Army will be required to install treatment systems on any wells that are impacted by the plume from Schofield Barracks above

one-half the maximum contaminant level (MCL) as established under the Safe Drinking Water Act;

• The Army must upgrade the treatment system or pay any incremental costs caused by contamination from Schofield Barracks at wells that already have a treatment system in place;

• Conduct five year reviews with the State of Hawaii and EPA.

The following actions were taken to implement the remedy decision for OU2:

• The Army installed air-stripper treatment units on their four contaminated municipal water supply wells at Schofield and will continue to operate the treatment system as long as contaminants in the influent water are above maximum contaminant levels (MCLs) specified in the Safe Drinking Water Act.

• The Army has sampled drinking water wells, agricultural wells and monitoring wells semi-annually throughout the central plateau area of Oahu since 1993 and will continue to do so until such time as the Army, EPA and HDOH agree that contaminant levels throughout the plume are below action levels.

• The groundwater contaminant plume appears to be confined by a system of dike impoundments and natural attenuation. The EPA, HDOH and the Army believe that it will not impact any additional down-gradient wells. Therefore, the contingency remedy for additional wellhead treatment is not expected to be needed.

• Institutional controls have been implemented that will restrict the placement of new drinking water wells into the contaminant plume. The Honolulu Board of Water Supply controls the installation of drinking water wells via a permit process. They will require the installation of wellhead treatment, paid for by the Army, on any wells that are drilled into the plume area.

OU4

The ROD for OU4, the landfill, was signed by EPA on September 26, 1996. The selected remedy included the following actions:

• Access restrictions and site security to limit human exposure to the landfill contents, prevent trespassing, and protect the integrity of the cap;

• Semi-annual ground water monitoring to monitor the effectiveness of the landfill site cap and determine groundwater flow directions in the vicinity of the landfill;

• Regrade the existing landfill cover;

• Remove Guinea grass from the existing cover and revegetate to improve future cap maintenance;

• Perform long-term maintenance of the landfill cover;

• Maintain existing passive landfill gas venting; and

• Install additional gas monitoring points at the perimeter of the landfill.

The following actions were taken to implement the remedy decision for OU4:

• The Army installed chain-link fence around the perimeter of the accessible portions of the landfill as an access restriction and has installed signs warning of potential health risks. The Former Landfill is part of a military installation that has a guard stationed at the entrances to monitor access to the installation 24 hours per day.

• The Army completed regrading the cover, installing nine new multi-level gas probes, stabilizing the sideslopes, and replacing and improving the vegetative cover in June 1998.

• The Army has conducted semi-annual groundwater monitoring and quarterly gas probe monitoring since the completion of the remedial action in June 1998. The groundwater monitoring is conducted as part of the OU2 work and it shows that the groundwater plume around the landfill is stable and at low levels of TCE concentration. The gas probe monitoring typically detects methane in four out of the 27 gas probe sampling points. The highest detection during the February 2000 monitoring event was 0.2 percent, which is well below the acceptable limit of 5 percent.

On July 21, 1998, the Army, EPA and HDOH, conducted a final inspection and determined that the remedial action had been successfully executed for all OUs. EPA reclassified Schofield Barracks to construction complete status in September 1998.

Operation and Maintenance

The Army is responsible for conducting long-term maintenance and upkeep of the landfill cover and for monitoring landfill gas, groundwater, and drinking water wells, in accordance with the approved Long-Term Operation, Maintenance and Monitoring Plans for OUs 2 and 4.

Five Year Reviews

CERCLA requires a five-year review of all sites with hazardous substances remaining above the health-based levels for unrestricted use of the site. Since the cleanup of the site utilized containment of hazardous materials within the landfill and wellhead treatment for drinking water, the five-year review process will be used to ensure that human health and the environment remain protected in the future. The first five-year review is scheduled for the year 2002.

Community Involvement

The Army published its final Community Relations Plan on January 31, 1997, after interviews with local residents and officials. An information repository was established at the Wahiawa Public Library and all reports and fact sheets were sent to the repository as they were completed.

The Army conducted public meetings prior to completing each of the four Records of Decision, and the public had no negative comments about any of the actions at Schofield.

Applicable Deletion Criteria and State Concurrence

EPA has determined that all appropriate responses under CERCLA at Schofield Army Barracks have been completed, and that no further CERCLA response is appropriate to protect human health and the environment. The Hawaii Department of Health concurred with the proposed deletion of the site from the NPL in a letter dated March 13, 2000. Therefore, EPA proposes to delete the site from the NPL. Documents supporting this action are available from the docket at the Region 9 office and in the Army's docket on Oahu.

Dated: April 25, 2000.

Felicia Marcus,

Regional Administrator, Region IX.

[FR Doc. 00–12520 Filed 5–19–00; 8:45 am]

BILLING CODE 6560–50–P

DEPARTMENT OF HEALTH AND HUMAN SERVICES

Office of Inspector General

42 CFR Part 1001

RIN 0991–AB05

Medicare and State Health Care Programs: Fraud and Abuse; Ambulance Restocking Safe Harbor Under the Anti-Kickback Statute

AGENCY: Office of Inspector General (OIG), HHS.

ACTION: Notice of proposed rulemaking.

SUMMARY: This proposed rule would set forth a new safe harbor, as authorized under section 14 of the Medicare and Medicaid Patient and Program Protection Act of 1987, to protect certain arrangements involving hospitals that replenish drugs and medical supplies used by ambulance providers when

transporting emergency patients to the hospitals.

DATES: To assure consideration, public comments must be delivered to the address provided below by no later than 5 p.m. on July 21, 2000.

ADDRESSES: Please mail or deliver your written comments to the following address: Department of Health and Human Services, Office of Inspector General, 330 Independence Avenue, SW, Room 5246, Attention: OIG–62–P, Washington, DC 20201.

Because of staffing and resource limitations, we cannot accept comments by facsimile (FAX) transmission. In commenting, please refer to file OIG–62–P.

FOR FURTHER INFORMATION CONTACT: Vicki L. Robinson, Senior Counsel, Office of Counsel to the Inspector General, (202) 619–0335.

SUPPLEMENTARY INFORMATION:

I. Background

Section 1128B(b) of the Social Security Act (the Act) (42 U.S.C. 1320a–7b(b)) provides criminal penalties for individuals or entities that knowingly and willfully offer, pay, solicit or receive remuneration in order to induce the referral of business reimbursable under the Federal or State health care programs. The offense is classified as a felony and is punishable by fines of up to $25,000 and imprisonment for up to five years. Violations of the anti-kickback statute may also result in the imposition of a civil money penalty (CMP) under section 1128A(a)(7) of the Act (42 U.S.C. 1320a–7a(a)(7)) or program exclusion under section 1128(b)(7) of the Act (42 U.S.C. 1320a–7(b)(7)).

The types of remuneration covered specifically include kickbacks, bribes and rebates, whether made directly or indirectly, overtly or covertly, in cash or in kind. In addition, prohibited conduct includes not only the payment of remuneration intended to induce referrals of patients, but also the payment of remuneration intended to induce the purchasing, leasing or ordering of any good, facility, service or item reimbursable by any Federal or State health care program.

Establishing the Original Safe Harbors

Since the statute on its face is so broad, concern had been expressed that some relatively innocuous commercial arrangements were technically covered by the statute and therefore were subject to criminal prosecution. As a response to the above concern, section 14 of the Medicare and Medicaid Patient and Program Protection Act of 1987, Public Law 100–93, specifically required the development and promulgation of regulations, the so-called ''safe harbor'' provisions, designed to specify various payment and business practices which, although potentially capable of inducing referrals of business under the Federal and State health care programs, would not be treated as criminal offenses under the anti-kickback statute. Beginning in July 29, 1991, we have published in the **Federal Register** a series of final regulations establishing ''safe harbors'' in various areas.[1] These OIG safe harbor provisions have been developed to limit the reach of the statute somewhat by permitting certain non-abusive arrangements, while encouraging beneficial and innocuous arrangements.

Health care providers and others may voluntarily seek to comply with these provisions so that they have the assurance that their business practices are not subject to any enforcement action under the anti-kickback statute, the CMP provision for anti-kickback violations or program exclusion authority related to kickbacks. In giving the Department the authority to protect certain arrangements and payment practices under the anti-kickback statute, Congress intended the safe harbor regulations to be evolving rules that would be updated periodically to reflect changing business practices and technologies in the health care industry.

OIG Advisory Opinions on Restocking Ambulance Supplies

The OIG has issued four advisory opinions regarding arrangements between hospitals and other facilities providing emergency medical supplies, *i.e.,* ''receiving facilities'' and ambulance companies, under which the receiving facilities replenish ambulances with drugs and medical supplies used during the transport of *emergency* patients to the receiving facilities. In many of these arrangements, the drugs and supplies are replenished without charge to the ambulance company.

In OIG Advisory Opinion 97–6 (October 8, 1997), we responded to a request for an advisory opinion involving an ambulance replenishing arrangement that presented a specific set of facts clearly implicating the anti-kickback statute. The arrangement, as presented in the facts certified by the requesting party, contained no appropriate safeguards against fraud and abuse of the Federal health care programs and their beneficiaries. Accordingly, we concluded that the arrangement potentially violated the anti-kickback statute.

Subsequently, in 1998, we received several additional advisory opinion requests that involved ambulance replenishing arrangements, and issued three additional advisory opinions *approving* ambulance replenishing arrangements.[2] The facts of those three arrangements differed significantly from the facts that led to OIG Advisory Opinion 97–6. Specifically, the latter three opinions involved ambulance replenishing programs conducted in accordance with comprehensive, coordinated emergency medical delivery systems involving all of an area's ambulance providers and hospitals (as well as other components of the emergency medical system, such as physicians and local government officials). The OIG approved the three arrangements (with the limited exception of a portion of one of the three programs), persuaded that the arrangements posed little risk of Federal health care program fraud or abuse and that the arrangements promoted comprehensive and coordinated efforts to improve emergency medical care.

Since the release of OIG Advisory Opinion 98–14 in October 1998, the OIG has received no further advisory opinion requests on the topic of ambulance replenishing and few informal follow-up inquiries regarding these arrangements.

II. Provisions of the Proposed Rule

The OIG believes that, in general, the ambulance and hospital industries understand the distinction between the first unfavorable advisory opinion and the subsequent three favorable opinions and are generally able to assess and structure arrangements accordingly. However, the OIG is aware of anecdotal reports that some receiving facilities are curbing or eliminating ambulance replenishing programs in order to cut emergency room costs, while other receiving facilities feel pressured to participate in ambulance replenishment arrangements. Some receiving facilities would like to implement or continue operating replenishing programs, but are concerned about possible liability under the anti-kickback statute.

We continue to believe that properly structured replenishing arrangements serve a significant public interest by providing a means of ensuring that ambulances are fully stocked with current medications, sanitary linens and

[1] 56 FR 35952 (July 29, 1991); 61 FR 2122 (January 25, 1996); 64 FR 63518 (November 19, 1999); and 64 FR 63504 (November 19, 1999).

[2] OIG Advisory opinion 98–7 (June 11, 1998); OIG Advisory Opinion 98–13 (September 30, 1998); and OIG Advisory Opinion 98–14 (October 28, 1998).

appropriate supplies, and that those supplies are compatible with equipment used in local emergency rooms so as to expedite the transfer of critically ill or injured patients to emergency room systems. Such replenishing arrangements are consistent with Federal policy established over the past 25 years.[3]

In an effort to further assure those providers engaged in innocuous and beneficial replenishing arrangements, we are proposing a new safe harbor under § 1001.952 of our regulations to protect certain arrangements between receiving facilities (including hospitals) and ambulance companies under which the receiving facilities replenish ambulances with drugs and medical supplies used during the transport of *emergency* patients to the receiving facilities. Under this proposed rule, we would provide safe harbor protection for ambulance replenishing arrangements that satisfy all of the conditions in one of two categories established by the safe harbor. Both categories pertain only to *emergency* ambulance services; the safe harbor would not protect replenishing of ambulance supplies, linens or medications following routine ambulance transports.

Replenishing Arrangements Where Ambulance Provider Pays Receiving Facility Fair Market Value

The first new proposed safe harbor would protect replenishing arrangements where an ambulance provider pays the receiving facility fair market value, based on an arms-length transaction, for replenished drugs or supplies (including linens) used in connection with the transport of an emergency patient. Payment would not need to be made at the time of the replenishing, provided commercially reasonable and appropriate payment arrangements have been made in advance. For linens, an exchange of a comparable quantity of laundered linens for soiled linens would be considered fair market value, notwithstanding any economic value attributable to the laundering of linens by receiving facilities, which often have specialized laundering equipment needed for compliance with sanitation requirements. A non-profit receiving facility would be protected under this safe harbor if it sells replenished drugs or medical supplies to a non-profit ambulance provider at cost in order to comply with the Non-Profit Institutions Act.[4]

Remuneration in the Form of Contemporaneous Replenishing of Drugs or Medical Supplies

The second proposed safe harbor would protect remuneration in the form of contemporaneous replenishing of drugs or medical supplies (including linens) used during an emergency transport of a patient to the receiving facility, even if the replenishing is for free or at reduced prices. We are proposing that the following seven conditions be met in order to qualify for protection under this safe harbor:

(1) Receiving facilities must provide replenishing on an equal basis for all ambulance providers who bring emergency patients to the receiving facility. This condition is intended to prevent receiving facilities from inappropriately using replenishing to attract or reward high referring ambulance providers.

(2) The replenishing arrangement must be part of a comprehensive and coordinated effort to improve the EMS delivery system in the relevant service area and must be open to all emergency ambulance providers and receiving facilities operating in the service area. It must be implemented with the participation of, and monitored by, a regional EMS Council or functionally similar entity, organization or association (the Oversight Entity). The Oversight Entity must be a non-profit entity composed of representatives of a broad array of participants in a service area's emergency medical system, such as hospitals, ambulance providers, emergency room physicians and nurses, public safety organizations, paramedics, local educational institutions and community residents. The involvement of a wide range of representatives of the local EMS community provides substantial assurance that the replenishment arrangement is intended to benefit the local community, rather than a single provider or group of providers. Participation in the Oversight Entity should be open to all interested parties in the service area on equal terms and conditions, *i.e.*, the Oversight Entity cannot be composed solely of representatives of a single health system. Typically, Oversight Entities will engage in the following types of activities:

—Standardization of EMS practices and equipment;
—Education and training for pre-hospital care providers;
—Ongoing evaluation and improvement of EMS capabilities in the service area;
—Public information campaigns; and
—Other activities designed to promote EMS care for the service area.

We recognize that the size, composition, structure and scope of activities of Oversight Entities may necessarily vary depending on the size and resources of the particular service area. We would expect, for example, an Oversight Entity in a small rural area with one hospital, a few physicians and one ambulance provider to look and operate differently than one in a densely populated urban area with several hospitals, a number of transport providers and diverse physicians, teaching facilities, Government agencies and the like. Oversight Entities should be part of a comprehensive and coordinated regional EMS system appropriate to the size and resources of the service area. We are not specifying any particular structure or legal form for the Oversight Entity; it must simply be functionally similar to a regional EMS Counsel. The participants in the Oversight Entity should be representative of the service area's EMS system. We are specifically soliciting comments on our proposal that safe harbored replenishing arrangements must be a part of a comprehensive and consolidated regional EMS system.

(3) The replenishing arrangement must be memorialized in writing, whether through a contract signed under the auspices of the Oversight Entity by all participating ambulance providers and receiving facilities or by a generally applicable plan or protocol promulgated or approved by the Oversight Entity. The replenishing arrangement must in practice comport with the terms of the written documentation.

(4) The receiving facility must not bill any Federal health care program or Federal program beneficiary for the replenished drugs or supplies, or write off such drugs or supplies as bad debt. The purpose of this requirement is to

[3] See, *e.g.*, Emergency Medical Services Systems Act of 1973 (EMSSA), Public Law 93–154 (providing Federal funding for the development of regional Emergency Medical Services (EMS) systems at the State, regional, and local levels, and defining ''emergency medical services system'' as ''a system which provides for the arrangement of personnel, facilities and equipment for the effective and coordinated delivery in an appropriate geographical area of health care services under emergency conditions * * * and which is administered by a public or nonprofit private entity which has the authority and the resources to provide effective administration of the system.''); Highway Safety Act of 1966, Public Law 89–594 (establishing an EMS program in the Department of Transportation); Emergency Medical Services for Children Program, under the Public Health Act, Public Law 98–555 (providing funds for enhancing pediatric EMS); and Trauma Care Systems Planning and Development Act of 1990, Public Law 101–590.

[4] 15 U.S.C. 13(c) exception to the Robinson-Patman Act (15 U.S.C. 13(a)–(f)). Inquiries as to the applicability of, or compliance with, the Non-Profit Institutions Act or the Robinson-Patman Act should be directed to the Federal Trade Commission.

prevent double payments by Medicare, which pays hospitals under Part A (through fiscal intermediaries), but which typically pays ambulance providers for drugs and supplies used during emergency transports under Part B (through carriers).

(5) In order to prevent ''double dipping,'' ambulance providers may not bill any Federal health care program or Federal beneficiary *separately* for the replenished drugs or supplies.

(6) The receiving facility and the ambulance provider must maintain records of the replenished drugs or supplies and make those records available to the Secretary upon request.

(7) The receiving facility and ambulance provider must otherwise comply with all Federal, State and local laws regulating emergency medical care and the provision of drugs and medical supplies, including laws relating to the handling of controlled substances such as morphine.

Nothing in this preamble or the proposed regulations is intended to express any view as to the appropriate billing of the Federal health care programs for supplies used during emergency transport services. Parties seeking to comply with these proposed safe harbors would still need to comply with all relevant billing and claims filing rules. The fifth and sixth conditions described above for the second proposed safe harbor merely set forth criteria for determining whether a particular arrangement qualifies for safe harbor protection under the anti-kickback statute; the conditions do not purport to establish any reimbursement rule. Questions regarding reimbursement under the Medicare and Medicaid programs should be addressed to the Health Care Financing Administration or the party's relevant fiscal intermediary or carrier.

As with the existing safe harbor provisions currently codified in § 1001.952, compliance with these proposed safe harbors would be voluntary. Failure to fit into one of these safe harbors would not mean that an ambulance replenishment arrangement is *illegal.* Rather, it would simply mean that the arrangement would need to be evaluated on a case-by-case basis.

Meeting the Criteria for Establishing New Safe Harbors

Section 205 of the Health Insurance Portability and Accountability Act, Public Law 104–191, established certain criteria that the Secretary may consider when modifying or establishing safe harbors to the anti-kickback statute. We indicated our intent to consider these criteria in evaluating proposals for new safe harbors in our Notice of Intent to Develop Regulations (61 FR 69061; December 31, 1996). We have considered these criteria in developing this proposed rulemaking, and we believe, for the reasons described above, that the proposed safe harbor for certain ambulance replenishing arrangements is likely to: (l) Increase or have no effect on access for needy patients to health care services; (2) increase the quality of health care services for needy patients; (3) have little or no effect on the cost of Federal health care programs; (4) have little or no effect on competition; and (5) have little or no effect on the quantity of services provided in underserved areas. We further believe the proposed safe harbor contains safeguards that limit the potential for overutilization and assure that patients retain their freedom of choice of service providers.

III. Regulatory Impact Statement

Executive Order 12866, the Unfunded Mandates Reform Act, Executive Order 13132, and the Regulatory Flexibility Act

The Office of Management and Budget (OMB) has reviewed this proposed rule in accordance with the provisions of Executive Order 12866 and the Regulatory Flexibility Act (5 U.S.C. 601-612), and has determined that it does not meet the criteria for a significant regulatory action. Executive Order 12866 directs agencies to assess all costs and benefits of available regulatory alternatives and, when rulemaking is necessary, to select regulatory approaches that maximize net benefits, including potential economic, environmental, public health, safety distributive and equity effects. Section 202 of the Unfunded Mandates Reform Act, Public Law 104–4, requires that agencies prepare an assessment of anticipated costs and benefits on any rulemaking that may result in an expenditure by State, local or tribal Government, or by the private sector of $100 million or more in any given year. Further, Executive Order 13132, Federalism, requires agencies to determine if a rule will have a significant affect on States, on their relationship with the Federal Government, and on the distribution of power and responsibility among the various levels of government.

In addition, under the Small Business Enforcement Act (SBEA) of 1996, if a rule has a significant economic effect on a substantial number of small businesses, the Secretary must specifically consider the economic effect of a rule on small business entities and analyze regulatory options that could lessen the impact of the rule. In addition, under the Regulatory Flexibility Act, if a rule has a significant economic effect on a substantial number of small businesses, the Secretary must specifically consider the economic effect of a rule on small business entities and analyze regulatory options that could lessen the impact of the rule.

Executive Order 12866 requires that all regulations reflect consideration of alternatives, costs, benefits, incentives, equity and available information. Regulations must meet certain standards, such as avoiding unnecessary burden. We believe that this proposed rule would have no significant economic impact. The proposed safe harbor provisions set forth in this rulemaking are designed to permit individuals and entities to freely engage in business practices and arrangements that encourage competition, innovation and economy. As indicated above, in doing so, these regulations impose no requirements on any party. Health care providers and others may voluntarily seek to comply with these provisions so that they have the assurance that their business practices are not subject to any enforcement actions under the anti-kickback statute. We believe that any aggregate economic effect of these safe harbor regulations would be minimal and would impact only those limited few who engage in prohibited behavior in violation of the statute. As such, we believe that the aggregate economic impact of these proposed regulations is minimal and would have no effect on the economy or on Federal or State expenditures

Additionally, in accordance with the Unfunded Mandates Reform Act of 1995, we believe that there are no significant costs associated with these proposed safe harbor guidelines that would impose any mandates on State, local or tribal governments, or the private sector that will result in an expenditure of $100 million or more in any given year. Further, in reviewing this rule under the threshold criteria of Executive Order 13132, Federalism, we have determined that this rule would not significantly affect the rights, roles and responsibilities of States, and that a full analysis under these Acts are not necessary.

Further, in accordance with the Regulatory Flexibility Act (RFA) of 1980, and the Small Business Regulatory Enforcement Act of 1996, which amended the RFA, we are required to determine if this rule will have a significant economic effect on a substantial number of small entities and, if so, to identify regulatory options that could lessen the impact. While

these safe harbor provisions may have an impact on small entities, we believe that the aggregate economic impact of this rulemaking would be minimal, since it is the nature of the violation and not the size of the entity that will result in a violation of the anti-kickback statute. Since the vast majority of individuals and entities potentially affected by these regulations do not engage in prohibited arrangements, schemes or practices in violation of the law, we believe that these proposed regulations would not have a significant economic impact on a number of small business entities, and that a regulatory flexibility analysis is not required for this rulemaking.

Paperwork Reduction Act

In accordance with section 3506(c)(2)(A) of the Paperwork Reduction Act (PRA) of 1995, we are required to solicit public comments, and receive final OMB approval, on any information collection requirements set forth in rulemaking. While compliance with the provisions in this safe harbor rule would be voluntary, proposed § 1001.952(v)(3) contains information collection requirements that would require approval by OMB. As such, we are required to solicit public comments under section 3506(c)(2)(A) of the PRA on these requirements. Specifically, in order to qualify for safe harbor protection for ambulance restocking arrangements under § 1001.952(v)(3), the regulations would require that replenishing agreements be set forth in writing in the form of (1) a contract signed under the auspices of the oversight entity by all participating ambulance providers and receiving facilities or (2) a generally applicable plan or protocol promulgated or approved by the oversight entity. There is no obligation to submit these agreements to the Secretary, however, in order to achieve initial compliance with the safe harbor. In addition, to qualify for safe harbor protection for ambulance restocking arrangements under § 1001.952(v)(3), the receiving facility and the ambulance provider must maintain records of the replenished drugs and medical supplies (including linens) and make those records available to the Secretary promptly upon request. However, as indicated above, the safe harbor does *not require* any submission of reports, data collection or other documents in order to be in compliance with the anti-kickback statute.

In accordance with the PRA requirements, we are inviting comments on (1) whether the proposed collection of information is necessary for the proper performance of the functions of the agency, including whether the information will have practical utility; (2) the accuracy of the estimate of the burden of the proposed collection of information; (3) ways to enhance the quality, utility and clarity of the information collected; and (4) ways to minimize the burden of the collection of information on parties, including through the use of automated collection techniques or other forms of information technology. As part of the OMB approval for the collection of information contained in this rule, we are soliciting public comments on this requirement, thereby initiating the normal PRA clearance.

Title: Ambulance Restocking Safe Harbor Under the Anti-Kickback Statute.

Summary of the collection of information: Proposed § 1001.952(v) would set forth a new statutory exception to the anti-kickback statute that covers any gift or transfer of drugs or medical supplies (including linens) by a hospital or other receiving facility to an ambulance provider for the purpose of replenishing comparable drugs or medical supplies (including linens) used by the ambulance provider in connection with the transport of an emergency patient to the hospital or other receiving facility. Safe harbors do not create any affirmative obligation on any individuals or entities. Seeking protection under these safe harbor provisions is purely voluntary.

The aggregate information burden for the information collection requirements contained in this proposed rulemaking is set forth below.

Respondents: In accordance with proposed § 1001.952(v), the respondents for the collection of information described in these regulations are parties involved in written agreements between (1) a hospital or other receiving facility that replenishes drugs and medical supplies, and (2) ambulance providers who bring emergency patients to the receiving facility.

Estimated number of respondents: The safe harbor being proposed in § 1001.952(v) would protect those restocking arrangements between receiving facilities that replenish drugs and medical supplies on an equal basis to all ambulance providers who transport their emergency patients to the receiving facility. Virtually all such replenishing arrangements already are memorialized in written contracts as a matter of prudent business practice, irrespective of the existence of the proposed safe harbor. We believe that few, if any, parties will enter into written arrangements specifically for the purposes of safe harbor protection. Accordingly, we estimate that the number of parties entering into written agreements to qualify for safe harbor protection will be negligible.

Estimated number of responses per respondent: None.

Estimated total annual burden on respondents: We believe that the burden of preparing written agreements and the aggregate information burden for the information collection requirements contained in this proposed rulemaking would be minimal. As indicated above, in most, if not all, cases the parties already have written agreements as part of the parties' replenishing arrangements, independent of the safe harbor requirements. Accordingly, any burden imposed by these proposed regulations would impose no burden on such parties.

Comments on this information collection activity should be sent to: Allison Herron Eydt, OIG Desk Officer, Office of Management and Budget, Room 10235, New Executive Office Building, 725 17th Street. NW, Washington, DC 20053, FAX: (202) 395–6974.

Comments on these paperwork reduction requirements may be submitted to the above-cited individual within 60 days following the **Federal Register** publication of this proposed rule.

IV. Public Inspection of Comments and Response to Comments

Comments will be available for public inspection June 5, 2000 in Room 5518, Office of Counsel to the Inspector General, at 330 Independence Avenue, SW, Washington, DC on Monday through Friday of each week (Federal holidays excepted) between the hours of 9 a.m. and 4 p.m., (202) 619–0089.

Because of the large number of items of correspondence we normally receive on **Federal Register** documents published for comment, we are not able to acknowledge or respond to them individually. We will consider all comments we receive by the date and time specified in the **DATES** section of this preamble, and will respond to the comments in the preamble of the final rule.

List of Subjects in 42 CFR Part 1001

Administrative practice and procedure, Fraud, Grant programs—health, Health facilities, Health professions, Maternal and child health, Medicaid, Medicare.

Accordingly, 42 CFR part 1001 would be amended as set forth below:

PART 1001—[AMENDED]

1. The authority citation for part 1001 would continue to read as follows:

Authority: 42 U.S.C. 1302, 1320a–7, 1320a–7b, 1395u(h), 1395u(j), 1395u(k), 1395y(d), 1395y(e), 1395cc(b)(2)(D), (E) and (F), and 1395hh; and sec. 2455, Pub.L. 103–355, 108 Stat. 3327 (31 U.S.C. 6101 note).

2. Section 1001.952 would be amended by republishing the introductory text and by adding a new paragraph (v) to read as follows:

§ 1001.952 Exceptions

The following payment practices shall not be treated as a criminal offense under section 1128B of the Act and shall not serve as the basis for an exclusion:

* * * * *

(v) *Ambulance restocking.* (1) As used in section 1128B of the Act, ''remuneration'' does not include any gift or transfer of drugs or medical supplies (including linens) by a hospital or other receiving facility to an ambulance provider for the purpose of replenishing comparable drugs or medical supplies (including linens) used by the ambulance provider in connection with the transport of an emergency patient to the hospital or other receiving facility if all of the applicable standards in either paragraph (v)(2) or (v)(3) of this section are satisfied.

(2)(i) Except as otherwise provided in paragraph (v)(2)(ii) of this section, the ambulance provider pays the receiving facility fair market value, based on an arms-length transaction, for the replenished drugs or medical supplies (including linens). A non-profit receiving facility will be deemed to meet this standard if it sells replenished drugs or medical supplies to a non-profit ambulance provider at cost in order to comply with the Non-Profit Institutions Act (15 U.S.C. 13(c)), exception to the Robinson-Patman Act (15 U.S.C. 3(a)–(f)).

(ii) If payment is not made contemporaneously with the replenishing of the drugs or medical supplies (including linens), the receiving facility and the ambulance provider make commercially reasonable payment arrangements in advance.

(3)(i) The receiving facility replenishes drugs and medical supplies (including linens) on an equal basis for all ambulance providers who bring emergency patients to the receiving facility.

(ii) The replenishing arrangement must be implemented with the participation of, and monitored by, an oversight entity (as defined in paragraph (v)(4)(ii) of this section) as part of a comprehensive and coordinated regional emergency medical system appropriate to the size and resources of the service area and must be open and available to all emergency ambulance providers and receiving facilities in the service area.

(iii) The replenishing arrangement must be memorialized in writing. The writing may be in the form of—

(A) A contract signed under the auspices of the oversight entity by all participating ambulance providers and receiving facilities or

(B) A generally applicable plan or protocol promulgated or approved by the oversight entity.

(iv) The receiving facility refrains from billing any Federal health care program or Federal health care program beneficiary for the replenished drugs or medical supplies (including linens) and does not write off the cost of such drugs or medical supplies (including linens) as bad debt.

(v) The ambulance provider refrains from billing any Federal health care program or Federal health care program beneficiary *separately* for the replenished drugs or medical supplies (including linens).

(vi) The receiving facility and the ambulance provider maintain records of the replenished drugs and medical supplies (including linens) and make those records available to the Secretary promptly upon request.

(vii) The receiving facility and the ambulance provider otherwise comply with all Federal, State and local laws regulating emergency medical care and the provision of drugs and medical supplies, including, but not limited to, laws relating to the handling of controlled substances.

(4) For purposes of paragraph (v)(3) of this section—

(i) A ''receiving facility'' is a hospital or other facility that provides emergency medical services; and

(ii) An ''oversight entity'' is a regional emergency medical services council or functionally similar entity, association or organization that—

(A) Is described in section 501(c)(3) or 501(c)(4) of the Internal Revenue Code and exempt from taxation under section 501(a) of that Code;

(B) Includes, or is composed of, representatives of a broad array of participants in a service area's emergency medical system (*e.g.,* hospitals, ambulance providers, emergency room physicians, paramedics, public safety organizations, local educational institutions and community residents);

(C) Is open to all interested parties in the service area on equal terms and conditions; and

(D) Has as its mission the improvement of the emergency medical services delivery system in the relevant service area.

Dated: November 2, 1999.

June Gibbs Brown,

Inspector General.

Approved: November 18, 1999.

Donna E. Shalala,

Secretary.

[FR Doc. 00–12697 Filed 5–19–00; 8:45 am]

BILLING CODE 4150–04–P

DEPARTMENT OF DEFENSE

48 CFR Parts 209 and 223

[DFARS Case 2000–D004]

Defense Federal Acquisition Regulation Supplement; Pollution Control and Clean Air and Water

AGENCY: Department of Defense (DoD).

ACTION: Proposed rule with request for comments.

SUMMARY: The Acting Director of Defense Procurement is proposing to amend the Defense Federal Acquisition Regulation Supplement (DFARS) to revise and relocate policy on the level of approval required to except a contract from certain restrictions of the Clean Air Act or the Clean Water Act. The policy is moved from the Pollution Control and Clean Air and Water subpart to the Debarment, Suspension, and Ineligibility subpart of the DFARS, because the Federal Acquisition Regulation (FAR) subpart on Pollution Control and Clean Air and Water has been removed.

DATES: Comments on the proposed rule should be submitted in writing to the address shown below on or before July 21, 2000, to be considered in the formation of the final rule.

ADDRESSES: Interested parties should submit written comments on the proposed rule to: Defense Acquisition Regulations Council, Attn: Ms. Sandra G. Haberlin, PDUSD (AT&L) DP (DAR), IMD 3D139, 3062 Defense Pentagon, Washington, DC 20301–3062. Telefax (703) 602–0350.

E-mail comments submitted via the Internet should be addressed to: dfars@acq.osd.mil

Please cite DFARS Case 2000–D004 in all correspondence related to this proposed rule. E-mail correspondence should cite DFARS Case 2000–D004 in the subject line.

FOR FURTHER INFORMATION CONTACT: Ms. Sandra G. Haberlin, (703) 602–0289.

SUPPLEMENTARY INFORMATION:

A. Background

On December 27, 1999, Item I of Federal Acquisition Circular 97–15 (64 FR 72415) removed Subpart 23.1, Pollution Control and Clean Air and Water, from the FAR. Subpart 23.1 contained policy pertaining to entities that are ineligible for contract award due to a violation of the Clean Air Act or the Clean Water Act. The FAR text was deemed unnecessary, because contracting officers can use the General Services Administration List of Parties Excluded from Federal Procurement and Nonprocurement Programs to ensure that they do not award contracts to ineligible entities. In accordance with Environmental Protection Agency regulations at 40 CFR 32.215(b), FAR Subpart 23.1 permitted an agency head to except a contract from the prohibition on award to a Clean Air Act or Clean Water Act violator if it was in the paramount interest of the United States to do so. DFARS Subpart 223.1 limited delegation of this exception authority to a level no lower than an official who is appointed by and with the advice of the Senate.

This DFARS rule proposes to—

1. Remove the text from DFARS Subpart 223.1, since FAR Subpart 23.1 no longer exists; and relocate the text to DFARS 209.405(b), since the corresponding text at FAR 9.405(b) addresses matters relating to entities on the List of Parties Excluded from Federal Procurement and Nonprocurement Programs;

2. Retain a limitation on delegation of the exception authority, but lower the permitted level of delegation to a level no lower than a general or flag officer or a member of the Senior Executive Service; and

3. Designate the text already located at DFARS 209.405 as 209.405(a), and amend the text to clarify that the provisions of 10 U.S.C. 2393 regarding a ''compelling reason'' determination apply only to the conduct of business with entities that are debarred or suspended.

This rule was not subject to Office of Management and Budget review under Executive Order 12866, dated September 30, 1993.

B. Regulatory Flexibility Act

The proposed rule is not expected to have a significant economic impact on a substantial number of small entities within the meaning of the Regulatory Flexibility Act, 5 U.S.C. 601, *et seq.,* because the rule pertains only to the exceptional situations where there is a need to conduct business with entities that are debarred or suspended or, because of a violation of the Clean Air Act or the Clean Water Act, are ineligible for award. Therefore, an initial regulatory flexibility analysis has not been performed. Comments are invited from small businesses and other interested parties. Comments from small entities concerning the affected DFARS subparts also will be considered in accordance with 5 U.S.C. 610. Such comments should be submitted separately and should cite DFARS Case 2000–D004.

C. Paperwork Reduction Act

The Paperwork Reduction Act does not apply because the rule does not impose any information collection requirements that require the approval of the Office of Management and Budget under 44 U.S.C. 3501, *et seq.*

List of Subjects in 48 CFR Parts 209 and 223

Government procurement.

Michele P. Peterson,

Executive Editor, Defense Acquisition Regulations Council.

Therefore, 48 CFR Parts 209 and 223 are proposed to be amended as follows:

1. The authority citation for 48 CFR Parts 209 and 223 continues to read as follows:

Authority: 41 U.S.C. 421 and 48 CFR Chapter 1.

PART 209—CONTRACTOR QUALIFICATIONS

2. Section 209.405 is revised to read as follows:

209.405 Effect of listing.

(a) Under 10 U.S.C. 2393(b), when a department or agency determines that a compelling reason exists for it to conduct business with a contractor that is debarred or suspended from procurement programs, it must provide written notice of the determination to the General Services Administration, Office of Acquisition Policy. Examples of compelling reasons are—

(1) Only a debarred or suspended contractor can provide the supplies or services;

(2) Urgency requires contracting with a debarred or suspended contractor;

(3) The contractor and a department or agency have an agreement covering the same events that resulted in the debarment or suspension and the agreement includes the department of agency decision not to debar or suspend the contractor; or

(4) The national defense requires continued business dealings with the debarred or suspended contractor.

(b)(i) The Procurement Cause and Treatment Code ''H'' annotation in the GSA List of Parties Excluded from Federal Procurement and Nonprocurement Programs identifies contractors that are declared ineligible for award of a contract or subcontract because of a violation of the Clean Air Act (42 U.S.C. 7606) or the Clean Water Act (33 U.S.C. 1368).

(ii) Under the authority of 40 CFR 32.215(b), the agency head may grant an exception permitting award to a Code ''H'' ineligible contractor if it is in the paramount interest of the United States.

(A) The agency head may delegate this exception authority to a level no lower than a general or flag officer or a member of the Senior Executive Service.

(B) The official granting the exception must provide written notice to the Environmental Protection Agency debarring official.

PART 223—ENVIRONMENT, CONSERVATION, OCCUPATIONAL SAFETY, AND DRUG-FREE WORKPLACE

Subpart 223.1 [Removed]

3. Subpart 223.1 is removed.

[FR Doc. 00–12414 Filed 5–19–00; 8:45 am]

BILLING CODE 5000–04–M

DEPARTMENT OF DEFENSE

48 CFR Part 215

[DFARS Case 2000–D300]

Defense Federal Acquisition Regulation Supplement; Profit incentives To Produce Innovative New Technologies

AGENCY: Department of Defense (DoD).

ACTION: Proposed rule with request for comments.

SUMMARY: The Acting Director of Defense Procurement is proposing to amend the Defense Federal Acquisition Regulation Supplement (DFARS) to implement Section 813 of the National Defense Authorization Act for Fiscal Year 2000. Section 813 requires DoD to review its profit guidelines to consider whether appropriate modifications, such as placing increased emphasis on technical risk as a factor for determining appropriate profit margins, would provide an increased profit incentive for contractors to develop and produce complex and innovative new technologies.

DATES: Comments on the proposed rule should be submitted in writing to the address shown below on or before July 21, 2000, to be considered in the formation of the final rule.

ADDRESSES: Interested parties should submit written comments on the proposed rule to: Defense Acquisition Regulations Council, Attn: Ms. Amy Williams, PDUSD(AT&L) DP(DAR), IMD 3D139, 3062 Defense Pentagon, Washington, DC 20301–3062. Telefax (703) 602–0350.

E-mail comments submitted via the Internet should be addressed to: dfars@acq.osd.mil

Please cite DFARS Case 2000–D300 in all correspondence related to this proposed rule. E-mail correspondence should cite DFARS Case 2000–D300 in the subject line.

FOR FURTHER INFORMATION CONTACT: Ms. Amy Williams, (703) 602–0288.

SUPPLEMENTARY INFORMATION:

A. Background

This rule proposes amendments to the profit policy in DFARS Subpart 215.4 to implement Section 813 of the National Defense Authorization Act for Fiscal Year 2000 (Public Law 106–65). DoD published an advance notice of proposed rulemaking on February 10, 2000 (65 FR 6574), posted a preliminary draft on potential changes on the Defense Procurement Internet web site, and held a public meeting on February 23, 2000. Representatives from Government and industry participated in the public meeting.

The proposed rule amends the weighted guidelines method of profit computation at DFARS 215.404–71 to combine the management and cost control elements of the performance risk factor; to establish a new ''technology incentive'' range for technical risk; and, based on comments received at the public meeting, to slightly modify some of the cost control standards. In addition, the rule amends DFARS 215.404–4(b) to clarify that DoD departments and agencies must use a structured approach for developing a prenegotiation profit or fee objective on any negotiated contract action when cost or pricing data is obtained.

This rule was not subject to Office of Management and Budget review under Executive Order 12866, dated September 30, 1993.

B. Regulatory Flexibility Act

The proposed rule is not expected to have a significant economic impact on a substantial number of small entities within the meaning of the Regulatory Flexibility Act, 5 U.S.C. 601, *et seq.,* because most contracts awarded to small entities are below $500,000, are based on adequate price competition, or are for commercial items, and do not require submission of cost or pricing data. Therefore, an initial regulatory flexibility analysis has not been performed. Comments are invited from small businesses and other interested parties. Comments from small entities concerning the affected DFARS subpart also will be considered in accordance with 5 U.S.C. 610. Such comments should be submitted separately and should cite DFARS Case 2000–D300.

C. Paperwork Reduction Act

The Paperwork Reduction Act does not apply because the rule does not impose any information collection requirements that require the approval of the Office of Management and Budget under 44 U.S.C. 3501, *et seq.*

List of Subjects in 48 CFR Part 215

Government procurement.

Michele P. Peterson,

Executive Editor, Defense Acquisition Regulations Council.

Therefore, 48 CFR part 215 is proposed to be amended as follows:

1. The authority citation for 48 CFR part 215 continues to read as follows:

Authority: 41 U.S.C. 421 and 48 CFR Chapter 1.

PART 215—CONTRACTING BY NEGOTIATION

2. Section 215.404–4 is amended by revising paragraph (b)(1) introductory text to read as follows:

215.404–4 Profit.

(b) * * * (1) Departments and agencies must use a structured approach for developing a prenegotiation profit or fee objective on any negotiated contract action when cost or pricing data is obtained, except for cost-plus-award-fee contracts (see 215.404–74) or contracts with Federally Funded Research and Development Centers (FFRDCs) (see 215.404–75). There are three structured approaches—

* * * * *

3. Section 215.404–71–2 is revised to read as follows:

215.404–71–2 Performance risk.

(a) *Description.* This profit factor addresses the contractor's degree of risk in fulfilling the contract requirements. The factor consists of two parts:

(1) Technical—the technical uncertainties of performance.

(2) Management/cost control—the degree of management effort necessary—

(i) To ensure that contract requirements are met; and

(ii) To reduce and control costs.

(b) *Determination.* The following extract from the DD Form 1547 is annotated to describe the process.

Item	Contractor risk factors	Assigned weighting	Assigned value	Base (item 18)	Profit objective
21.	Technical	(1)	(2)	N/A	N/A
22.	Management/Cost Control	(1)	(2)	N/A	N/A
23.	Reserved				
24.	Performance Risk (Composite)	N/A	(3)	(4)(	5)

[1] Assign a weight (percentage) to each element according to its input to the total performance risk. The total of the two weights equals 100 percent.

[2] Select a value for each element from the list in paragraph (c) of this subsection using the evaluation criteria in paragraphs (d) and (e) of this subsection.

[3] Compute the composite as shown in the following example:

	Assigned weighting (percent)	Assigned value (percent)	Weighted value (percent)
Technical	60	5.0	3.0
Management/Cost Control	40	4.0	1.6

	Assigned weighting (percent)	Assigned value (percent)	Weighted value (percent)
Composite Value	100		4.6

[4] Insert the amount from Block 18 of the DD Form 1547. Block 18 is total contract costs, excluding general and administrative expenses, contractor independent research and development and bid and proposal expenses, and facilities capital cost of money.

[5] Multiply (3) by (4).

(c) *Values: Normal and designated ranges.*

Normal value (percnet)	Designated range (percent)j	
Standard	4	2 to 6
Alternate	6	4 to 8
Technology Incentive	8	6 to 10

(1) *Standard.* The standard designated range should apply to most contracts.

(2) *Alternate.* Contracting officers may use the alternate designated range for research and development and service contractors when these contractors require relatively low capital investment in buildings and equipment when compared to the defense industry overall. If the alternate designated range is used, do not give any profit for facilities capital employed (see 215.404–71–4(c)(3)).

(3) *Technology incentive.* For the technical factor only, contracting officers may use the technology incentive range for acquisitions that include development or production of innovative new technologies.

(d) *Evaluation criteria for technical.* (1) Review the contract requirements and focus on the critical performance elements in the statement of work or specifications. Factors to consider include—

(i) Technology being applied or developed by the contractor;

(ii) Technical complexity;

(iii) Program maturity;

(iv) Performance specifications and tolerances;

(v) Delivery schedule; and

(vi) Extent of a warranty or guarantee.

(2) *Above normal conditions.* (i) The contracting officer may assign a higher than normal value in those cases where there is a substantial technical risk. Indicators are—

(A) Items are being manufactured using specifications with stringent tolerance limits;

(B) The efforts require highly skilled personnel or require the use of state-of-the-art machinery;

(C) The services and analytical efforts are extremely important to the Government and must be performed to exacting standards;

(D) The contractor's independent development and investment has reduced the Government's risk or cost;

(E) The contractor has accepted an accelerated delivery schedule to meet DoD requirements; or

(F) The contractor has assumed additional risk through warranty provisions.

(ii) Extremely complex, vital efforts to overcome difficult technical obstacles that require personnel with exceptional abilities, experience, and professional credentials may justify a value significantly above normal.

(iii) The following may justify a maximum value—

(A) Development or initial production of a new item, particularly if performance or quality specifications are tight; or

(B) A high degree of development or production concurrency.

(3) *Below normal conditions.* (i) The contracting officer may assign a lower than normal value in those cases where the technical risk is low.

Indicators are—

(A) Acquisition is for off-the-shelf items;

(B) Requirements are relatively simple;

(C) Technology is not complex;

(D) Efforts do not require highly skilled personnel;

(E) Efforts are routine;

(F) Programs are mature; or

(G) Acquisition is a follow-on effort or a repetitive type acquisition.

(ii) The contracting officer may assign a value significantly below normal for—

(A) Routine services;

(B) Production of simple items;

(C) Rote entry or routine integration of Government-furnished information; or

(D) Simple operations with Government-furnished property.

(4) *Technology incentive range.*

(i) The contracting officer may assign values within the technology incentive range when contracting performance includes the introduction of new, significant technological innovation. Use the technology incentive range only for the most innovative contract efforts. Innovation may be in the form of—

(A) Development or application of new technology that fundamentally changes the characteristics of an existing product or system and that results in increased technical performance, improved reliability, or reduced costs; or

(B) New products or systems that contain significant technological advances over the products or systems they are replacing.

(ii) When selecting a value within the technology incentive range, the contracting officer should consider the relative value of the proposed innovation to the acquisition as a whole. When the innovation represents a minor benefit, the contracting officer should consider using values less than the norm. For innovative efforts that will have a major positive impact on the product or program, the contracting officer may use values above the norm.

(e) *Evaluation criteria for management/cost control.*

(1) The contracting officer should evaluate—

(i) The contractor's management and internal control systems using contracting office information and reviews made by field contract administration offices or other DoD field offices;

(ii) The management involvement expected on the prospective contract action;

(iii) The degree of cost mix as an indication of the types of resources applied and value added by the contractor;

(iv) The contractor's support of Federal socioeconomic programs;

(v) The expected reliability of the contractor's cost estimates (including the contractor's cost estimating system);

(vi) The contractor's cost reduction initiatives (*e.g.*, competition advocacy programs, technical insertion programs, obsolete parts control programs, dual sourcing, square parts pricing reform, value engineering);

(vii) The adequacy of the contractor's management approach to controlling cost and schedule; and

(viii) Any other factors that affect the contractor's ability to meet the cost targets (*e.g.*, foreign currency exchange rates and inflation rates).

(2) *Above normal conditions.* (i) The contracting officer may assign a higher than normal value when the management effort is intense. Indicators of this are—

(A) The contractor's value added is both considerable and reasonably difficult;

(B) The effort involves a high degree of integration or coordination;

(C) The contractor has a substantial record of active participation in Federal socioeconomic programs;

(D) The contractor provides fully documented and reliable cost estimates;

(E) The contractor has an aggressive cost reduction program that has demonstrable benefits;

(F) The contractor uses a high degree of subcontract competition (*e.g.*, agressive dual sourcing);

(G) The contractor has a proven record of cost tracking and control; or

(H) The contractor aggressively seeks process improvements to reduce costs.

(ii) The contracting officer may justify a maximum value when the effort—

(A) Requires large scale integration of the most complex nature;

(B) Involves major international activities with significant management coordination (*e.g.,* offsets with foreign vendors); or

(C) Has critically important milestones.

(3) *Below normal conditions.* (i) The contracting officer may assign a lower than normal value when the management effort is minimal. Indicators of this are—

(A) The program is mature and many end item deliveries have been made;

(B) The contractor adds minimum value to an item;

(C) The efforts are routine and require minimal supervision;

(D) The contractor provides poor quality, untimely proposals;

(E) The contractor fails to provide an adequate analysis of subcontractor costs;

(F) The contractor does not cooperate in the evaluation and negotiation of the proposal;

(G) The contractor's cost estimating system is marginal;

(H) The contractor has made minimal effort to initiate cost reduction programs;

(I) The contractor's cost proposal is inadequate; or

(J) The contractor has a record of cost overruns or another indication of unreliable cost estimates and lack of cost control.

(ii) The following may justify a value significantly below normal—

(A) Reviews performed by the field contract administration offices disclose unsatisfactory management and internal control systems (*e.g.,* quality assurance, property control, safety, security); or

(B) The effort requires an unusually low degree of management involvement.

4. Section 215.404–702 is amended by adding paragraph (b)(1)(iii) to read as follows:

215.404–72 Modified weighted guidelines method for nonprofit organizations other than FFRDCs.

* * * * *

(b) * * *

(1) * * *

(iii) Do not assign a value from the technology incentive designated range.

* * * * *

[FR Doc. 00–12416 Filed 5–19–00; 8:45 am]

BILLING CODE 5000–04–M

NATIONAL AERONAUTICS AND SPACE ADMINISTRATION

48 CFR Parts 1803 and 1852

NASA Inspector General Hotline Posters

AGENCY: National Aeronautics and Space Administration (NASA).

ACTION: Proposed rule.

SUMMARY: This is a proposed rule to amend the NASA FAR Supplement (NFS) to require NASA contractors to display ''hotline posters''on contracts exceeding $5,000,000 and performed at contractor facilities in the United States.

DATES: Comments should be submitted on or before July 21, 2000.

ADDRESSES: Interested parties should submit written comments to Paul Brundage, NASA Headquarters Office of Procurement, Contract Management Division (Code HK), Washington, DC 20456–0001. Comments may also be submitted by email to pbrundage@hq.nasa.gov.

FOR FURTHER INFORMATION CONTACT: Paul Brundage, (202) 358–0481.

SUPPLEMENTARY INFORMATION:

A. Background

NASA's Office of Inspector General (IG) has requested that NASA contractors be required to display ''hotline posters'' in contractor facilities performing work on some NASA contracts. Foreign contracts and contracts less than $5,000,000 would be exempt. This proposed rule would require contractors to obtain from the NASA IG ''hotline posters'' and to post them in facilities where and when work is performed on an applicable NASA contract. By waiver from Part 12, NASA might also impose this requirement on a case-by-case basis in contracts for commercial items when unusual circumstances warrant. An example of such circumstances might include procurements involving extraordinary concerns about the safety of human life.

B. Regulatory Flexibility Act

This proposed rule is not expected to have a significant economic impact on a substantial number of small business entities within the meaning of the Regulatory Flexibility Act (5 U.S.C. 601 *et seq.*) because it only affects small business entities with contracts exceeding $5,000,000 and the NASA IG will provide the posters at no direct cost to contractors.

C. Paperwork Reduction Act

The Paperwork Reduction Act does not apply because this proposed rule does not impose information collection requirements that require the approval of the Office of Management and Budget under 44 U.S.C. 3501, *et seq.*

Lists of Subjects in 48 CFR Parts 1803 and 1852

Government procurement.

Tom Luedtke,

Associate Administrator for Procurement.

Accordingly, 48 CFR Parts 1803 and 1852 are proposed to be amended as follows:

1. The authority citation for 48 CFR Parts 1803 and 1852 continues to read as follows:

Authority: 42 U.S.C. 2473(c)(1).

PART 1803—IMPROPER BUSINESS PRACTICES AND PERSONAL CONFLICTS OF INTEREST

2. Add Subpart 1803.70 to read as follows:

Subpart 1803.70—IG Hotline Posters

1803.7000 Policy.

1803.7001 Contract clause.

Subpart 1803.70—IG Hotline Posters

1803.7000 Policy.

NASA requires contractors to display NASA hotline posters prepared by the NASA Office of Inspector General on those contracts specified in 1803.7001, so that employees of the contractor having knowledge of waste, fraud, or abuse, can readily identify a means to contact NASA's IG.

1803.7001 Contract clause.

Contracting officers must insert the provision at 1852.203–70, Display of Inspector General Hotline Posters, in solicitations and contracts expected to exceed $5,000,000 and performed at contractor facilities in the United States.

PART 1852—SOLICITATION PROVISIONS AND CONTRACT CLAUSES

3. Add section 1852.203–70 to read as follows:

1852.203–70 Display of Inspector General Hotline Posters.

As prescribed in 1803.7001, insert the following clause:

Display of Inspector General Hotline Posters

(Date)

(a) The Contractor shall display prominently in common work areas within business segments performing work under this contract, Inspector General Hotline Posters available under paragraph (b) of this clause.

(b) Inspector General Hotline Posters may be obtained from NASA Office of Inspector General, Code W, Washington, DC, 20546–0001, (202) 358–1220.

(End of clause)

[FR Doc. 00–12781 Filed 5–19–00; 8:45 am]

BILLING CODE 7510–01–M

DEPARTMENT OF TRANSPORTATION

Federal Motor Carrier Safety Administration

49 CFR Parts 350, 390, 394, 395 and 398

[Docket No. FMCSA–97–2350]

RIN 2126–AA232

Public Hearings on Hours of Service of Drivers; Driver Rest and Sleep for Safe Operations

AGENCY: Federal Motor Carrier Safety Administration (FMCSA), DOT.

ACTION: Notice of hearings.

SUMMARY: The FMCSA is announcing the second through seventh public hearings for interested persons to present comments and views on the FMCSA's proposed revisions to its hours-of-service regulations (65 FR 25540, May 2, 2000). This action is necessary to inform the public about the dates, times, and locations of the hearings. The FMCSA hopes to hear from the public, specifically drivers of trucks and buses, about how the proposed hours-of-service regulations would improve highway safety and affect their professional, personal, and family life. All oral presentations will be transcribed and placed in the rulemaking docket for the FMCSA's consideration.

DATES: The second hearing will be June 7 and 8 in Ontario, CA. Subsequent hearings will be June 12 and 13 in Golden, CO; June 15 and 16 in Kansas City, MO; June 20 and 21 in Indianapolis, IN; June 26 and 27 in Vernon, CT; and June 29 and 30 in Atlanta, GA. All will begin at 8:30 a.m. and end at 5 p.m.

ADDRESSES: The second session will be at the Ontario Convention Center, Meeting Room 104B, 2000 Convention Center Way, Ontario, CA. The third will be held at Auditorium 2, Jefferson County Fairgrounds, 15200 West Sixth Avenue, Golden, CO. The fourth will be at the Wagstaff Theater, American Royal Center Complex, 1701 American Royal Court, Kansas City, MO. The fifth will be at the Union Federal Southwest Pavilion, Indiana State Fairgrounds, 1202 East 38th Street, Indianapolis, IN. The sixth will be at the Quality Inn Conference Center, 51 Hartford Turnpike (Route 83, I–84, Exit 63), Vernon, CT. The seventh will be at the Atlanta South Truck Stop, 122 Truck Stop Way (I–75, Exit 201), Jackson, GA.

FOR FURTHER INFORMATION CONTACT: *General Information.* For general information or if you have special needs contact Mr. Stanley Hamilton, Office of Regulatory Development, (202) 366–0665. *Specific Information.* For information concerning the rulemaking contact Mr. David Miller, Office of Driver and Carrier Operations, (202) 366–1790, or Mr. Charles Medalen, Office of the Chief Counsel, (202) 366–1354.

SUPPLEMENTARY INFORMATION:

Electronic Access

Internet users may access all comment received by the U.S. DOT Dockets, Room PL–401, by using the universal resource locator (URL): *http://dms.dot.gov.* It is available 24 hours each day, 365 days a year. Please follow the instructions on line for more information and help.

An electronic copy of this document may be downloaded by using a computer, modem and suitable communications software from the Government Printing Office's Electronic Bulletin Board Service at (202) 512–1661. Internet users may reach the Office of the Federal Register's web page at http://www.*access.gpo.gov/nara*. Internet users may also find this document at the FMCSA's Motor Carrier Regulatory Information Service (MCREGIS) web site for notices at *http://www.fmcsa.dot.gov/rulesregs/fmcsr/rulemakings.htm*.

First Hearing Notice

The notice for the first hearing was published May 5, 2000 (65 FR 26166). The first hearing will be in Washington, DC on May 31 and June 1 at the DOT headquarters, Room 2230, 400 Seventh Street, SW 20590.

Accessibility Needs

If you need special accommodations, such as sign language interpretation, please contact Mr. Stanley Hamilton, Office of Regulatory Development, (202) 366–0665.

Oral and Written Comments

Oral comments should be limited to 10 minutes or less. Written comments must be sent to: Docket Clerk, Attn: DOT Docket No. FMCSA–97–2350, U.S. DOT Dockets, Department of Transportation, Room PL–401, 400 Seventh Street, SW., Washington, DC 20590–0001. Persons who require acknowledgment of the receipt of their comments must enclose a stamped, self-addressed postcard. Comments may be reviewed at the above address from 9 a.m. through 5 p.m. Monday through Friday, except Federal holidays.

Authority: 49 U.S.C. 322, 31502, and 31136; and 49 CFR 1.73.

Issued on: May 15, 2000.

Julie Anna Cirillo,

Acting Deputy Administrator.

[FR Doc. 00–12736 Filed 5–19–00; 8:45 am]

BILLING CODE 4910–22–P

DEPARTMENT OF COMMERCE

National Oceanic and Atmospheric Administration

50 CFR Part 679

[Docket No. 000211040–0040–01; I.D. 051100D]

Fisheries of the Exclusive Economic Zone Off Alaska; Halibut Bycatch Mortality Allowance in the Bering Sea and Aleutian Islands Management Area

AGENCY: National Marine Fisheries Service (NMFS), National Oceanic and Atmospheric Administration (NOAA), Commerce.

ACTION: Proposed reapportionment of Pacific halibut bycatch mortality allowance specified for the nontrawl fishery categories; request for comments.

SUMMARY: NMFS proposes the reapportionment of the 2000 halibut bycatch mortality allowance specified for the Pacific cod hook-and-line fishery category to the other nontrawl fishery category in the Bering Sea and Aleutian Islands management area (BSAI). This action is necessary to allow the harvest of species constrained by the other nontrawl halibut bycatch mortality

allowance, in particular Greenland turbot, while not further restricting the hook-and-line Pacific cod fishery. This action is intended to promote the goals and objectives of the Fishery Management Plan for the Groundfish Fishery of the Bering Sea and Aleutians Islands Area (FMP).

DATES: Comments on this action must be received at the following address no later than 4:30 p.m., A.l.t., June 6, 2000.

ADDRESSES: Comments may be mailed to Sue Salveson, Assistant Regional Administrator, Sustainable Fisheries Division, Alaska Region, NMFS, P.O. Box 21668, Juneau, AK 99802–1668, Attn: Lori Gravel. Hand delivery or courier delivery of comments may be sent to the Federal Building, 709 West 9th Street, Room 453, Juneau, AK 99801. The final environmental assessment and final regulatory flexibility analysis prepared for the final 2000 total allowable catch specifications may be obtained from the same address.

FOR FURTHER INFORMATION CONTACT: Andrew Smoker, 907–586–7228.

SUPPLEMENTARY INFORMATION: NMFS manages the groundfish fishery in the BSAI exclusive economic zone according to the FMP prepared by the North Pacific Fishery Management Council under authority of the Magnuson-Stevens Fishery Conservation and Management Act. Regulations governing fishing by U.S. vessels in accordance with the FMP at subpart H of 50 CFR part 600 and 50 CFR part 679.

The BSAI halibut prohibited species catch (PSC) limit for nontrawl gear is an amount of halibut equivalent to 900 metric tons (mt) of halibut mortality (§ 679.21(e)(2)(i)). The Final 2000 Harvest Specifications of Groundfish for the BSAI established the apportionment of the nontrawl halibut PSC limit to bycatch allowances for the Pacific cod hook-and-line and other nontrawl fisheries was established as 748 mt and 84 mt respectively (65 FR 8282, February 18, 2000). As of April 22, 2000, 593 mt remain in the total 2000 halibut bycatch mortality allowance for the hook-and-line Pacific cod fishery. The other non-trawl fishery opened on May 1, 2000.

The hook-and-line fishery for Pacific cod will reopen on September 1, 2000, and is projected to take as much as 300 mt of halibut mortality for the remainder of 2000. The directed fishery for Greenland turbot, a constituent and primary fishery of the other nontrawl category, may require an estimated 150 mt of halibut mortality to fully harvest the remaining directed fishing allowance of Greenland turbot.

NMFS has determined that a reapportionment of 75 mt of halibut bycatch mortality allowance from the hook-and-line Pacific cod to the other nontrawl fishery category is necessary to promote achieving the optimum yield harvest of the BSAI nontrawl fisheries. This reapportionment is based on the best available scientific information pertaining to bycatch rates reported by NMFS-certified observers.

Therefore, in order to provide greater opportunity to harvest the BSAI Greenland turbot total allowable catch (TAC) while not jeopardizing the opportunity to harvest the amount of the Pacific cod TAC allocated to hook-and-line vessels, NMFS proposes to increase the halibut bycatch mortality allowance specified for the other nontrawl fishery category by 75 mt and reduce the halibut bycatch mortality allowance specified for the Pacific cod hook-and-line fishery by the same amount. The halibut bycatch mortality specifications for the 2000 BSAI nontrawl fisheries are listed in Table 7 of the final 2000 harvest specifications (65 FR 8282, February 18, 2000). To accommodate the proposed action, the 2000 BSAI final harvest specifications would be amended by adding the following Table 7A.

TABLE 7A.—2000 BSAI PROHIBITED SPECIES BYCATCH ALLOWANCES FOR THE BSAI NON-TRAWL FISHERIES

Non-trawl fisheries	Halibut mortality (mt) BSAI
Pacific cod—Total [1]	673.
Jan. 1–April 30	457.
May 1–Sept. 1	0.
Sept. 15–Dec. 31	216.
Other non-trawl—Total	159.
May 1–Dec. 31	159.
Groundfish pot & jog	exempt .
Sablefish hook-and-line	exempt.

[1] Consistent with § 679.21(e)(5)(iv)(A), Any unused halibut PSC from the first trimester may be rolled over into the third trimester.

NMFS invites public comments on its proposal to reallocate the projected unused amount of halibut mortality from the hook-and-line Pacific cod fishery to the other nontrawl fishery category.

Classification

This action is authorized under 50 CFR 679.21(e)(4) and is exempt from OMB review under E.O. 12866.

NMFS prepared an environmental assessment (EA) and final regulatory flexibility assessment (FRFA) for the 2000 harvest specifications (See **ADDRESSES**). The proposed reapportionment of the BSAI nontrawl halibut PSC limit is intended to provide fuller opportunity to conduct the fishing activities considered in the EA/FRFA and is fully within the scope of these analyses.

Authority: 16 U.S.C. 773 *et seq.*, 1801 *et seq.* and 3631 *et seq.*

Dated: May 17, 2000.

Bruce C. Morehead,

Acting Director, Office of Sustainable Fisheries, National Marine Fisheries Service.

[FR Doc. 00–12833 Filed 5–19–00; 8:45 am]

BILLING CODE 3510–22–P

Notices

Federal Register

Vol. 65, No. 99

Monday, May 22, 2000

This section of the FEDERAL REGISTER contains documents other than rules or proposed rules that are applicable to the public. Notices of hearings and investigations, committee meetings, agency decisions and rulings, delegations of authority, filing of petitions and applications and agency statements of organization and functions are examples of documents appearing in this section.

DEPARTMENT OF AGRICULTURE

Office of the Secretary

[Docket No. CN–00–004]

Proposal to Reestablish the Advisory Committee on Universal Cotton Standards

AGENCY: Office of the Secretary, USDA.

ACTION: Notice of Intent to Reestablish the Advisory Committee on Universal Cotton Standards.

SUMMARY: The U.S. Department of Agriculture (USDA) is proposing to reestablish an advisory committee to review official Universal Standards for American Upland cotton prepared by USDA and make recommendations regarding the establishment or revision of the standards.

DATES: Comments must be received by June 21, 2000.

ADDRESSES: Send written comments to: Norma McDill, Cotton Program, AMS, USDA, 1400 Independence Avenue, Rm 2641–S, Washington, DC 20250–0224. Comments will be available for public inspection during regular business hours at the above office in Rm 2641-South Building, 14th & Independence Avenue, SW., Washington, DC.

FOR FURTHER INFORMATION CONTACT: Norma McDill, 202–720–2145.

SUPPLEMENTARY INFORMATION: Pursuant to the Federal Advisory Committee Act (5 U.S.C. App.) , notice is hereby given that the Secretary of Agriculture intends to reestablish the Advisory Committee on Universal Standards composed of foreign and domestic representatives of the cotton industry. The purpose of the committee is to review official Universal Standards for U.S. Upland cotton prepared by USDA and make recommendations regarding the establishment or revision of the standards established under the United States Cotton Standards Act (7 U.S.C. 51 *et seq.*). The last Advisory Committee on Universal Standards was established in 1997. This Advisory Committee's term ended in 1999.

The Secretary has determined that the work of the committee is in the public interest and is in connection with the duties of the Department of Agriculture. No other advisory committee in existence is capable of advising and assisting the Department on the task assigned, nor does the Department have an alternative means to obtain the technical and practical expertise needed from private industry.

Equal opportunity practices, in line with USDA policies, will be followed in all appointments to the committee. To ensure that the recommendations of the committee have taken into account the needs of diverse groups served by the Department, membership shall include, to the extent practicable, individuals with demonstrated ability to represent minorities, women, and persons with disabilities.

Balanced committee membership would be attained domestically and internationally through the following committee composition.

Representation by Domestic Industry

The U.S. cotton industry's committee membership will be comprised of 12 producers and ginners, 6 representatives of merchandising firms, and 6 representatives of textile manufacturers. These representatives will be appointed by the Secretary of Agriculture.

Each member will have one vote. Accordingly, voting privileges will be divided as follows: (1) U.S. cotton producers and ginners—12 votes; (2) U.S. merchandising firms—6 votes; (3) U.S. textile manufacturers—6 votes.

Representation by Foreign Signatory Associations

There will be 2 committee members from each of the foreign signatory associations. These committee members will be designated by the respective associations. Voting privileges will be divided as follows: (1) Foreign signatory merchant associations—6 votes; (2) Foreign signatory spinner associations—6 votes.

A thirty-day comment period is provided for interested persons to comment on this action.

Dated: May 17, 2000.

Norma McDill,

Acting Deputy Administrator, Cotton Program.

[FR Doc. 00–12798 Filed 5–19–00; 8:45 am]

BILLING CODE 3410–02–P

DEPARTMENT OF AGRICULTURE

Agricultural Marketing Service

[Docket No. FV00–928–1NC]

Notice of Request for Extension of a Currently Approved Information Collection

AGENCY: Agricultural Marketing Service, USDA.

ACTION: Notice and request for comments.

SUMMARY: In accordance with the Paperwork Reduction Act of 1995 (44 U.S.C. Chapter 35), this notice announces the Agricultural Marketing Service's (AMS) intention to request an extension for a currently approved information collection for Papayas Grown in Hawaii, Marketing Order No. 928.

DATES: Comments on this notice must be received by July 21, 2000.

ADDITIONAL INFORMATION OR COMMENTS: Contact Valerie L. Emmer-Scott, Marketing Specialist, Marketing Order Administration Branch, Fruit and Vegetable Programs, AMS, USDA, room 2525–S., P.O. Box 96456, Washington, DC 20090–6456; Tel: (202) 205–2829, Fax: (202) 720–5698, or E-mail: moabdocket_clerk@usda.gov.

Small businesses may request information on this notice by contacting Jay Guerber, Regulatory Fairness Representative, Marketing Order Administration Branch, Fruit and Vegetable Programs, AMS, USDA, room 2525–S, P.O. Box 96456, Washington, D.C., 20090–6456; telephone (202) 720–2491, Fax: (202) 720–5698, or E-mail: Jay.Guerber@usda.gov.

SUPPLEMENTARY INFORMATION:

Title: Papayas Grown in Hawaii, Marketing Order No. 928.

OMB Number: 0581–0102.

Expiration Date of Approval: November 30, 2000.

Type of Request: Extension and revision of a currently approved information collection.

Abstract: Marketing order programs provide an opportunity for producers of fresh fruits, vegetables and specialty crops, in a specified production area, to work together to solve marketing problems that cannot be solved individually. Order regulations help ensure adequate supplies of high quality product and adequate returns to producers. Under the Agricultural Marketing Agreement Act of 1937 (Act), as amended (7 U.S.C. 601–674), industries enter into marketing order programs. The Secretary of Agriculture is authorized to oversee the order operations and issue regulations recommended by a committee of representatives from each commodity industry.

The information collection requirements in this request are essential to carry out the intent of the Act, to provide the respondents the type of service they request, and to administer the program, which has operated since 1971.

The papaya marketing order regulates the handling of papayas grown in Hawaii, hereinafter referred to as the ''order.'' The order authorizes production and marketing research and development projects, including paid advertising. The research and promotion activities are paid for by assessments on handlers of papaya.

The order, and rules and regulations issued thereunder, authorize the Papaya Administrative Committee (committee), the agency responsible for local administration of the order, to require handlers and growers to submit certain information. Much of this information is compiled in aggregate and provided to the industry to assist in marketing decisions.

The committee has developed forms as a means for persons to file required information with the Committee relating to papaya supplies, shipments, dispositions, and other information needed to effectively carry out the purpose of the Act and order. Papayas may be shipped year-round and these forms are utilized accordingly. A USDA form is used to allow growers to vote on amendments to or continuance of the marketing order. In addition, papaya growers and grower/handlers who are nominated by their peers to serve as representatives on the committee must file nomination forms with the Secretary.

Formal rulemaking amendments to the order must be approved in referenda conducted by the Secretary. Also, the Secretary may conduct a continuance referendum to determine industry support for continuation of the order. Handlers are asked to sign an agreement to indicate their willingness to abide by the provisions of the order whenever the order is amended. These forms are included in this request. The forms covered under this information collection require the minimum information necessary to effectively carry out the requirements of the order, and their use is necessary to fulfill the intent of the Act as expressed in the order, and the rules and regulations issued under the order.

The information collected is used only by authorized representatives of the USDA, including AMS, Fruit and Vegetable Programs' regional and headquarter's staff, and authorized employees of the committee. Authorized committee employees and the industry are the primary users of the information, and AMS is the secondary user.

Estimate of Burden: Public reporting burden for this collection of information is estimated to average .76 hours per response.

Respondents: Hawaiian papaya growers and handlers and two public members in the production area of Hawaii.

Estimated Number of Respondents: 75.

Estimated Number of Responses per Respondent: 18.42

Estimated Total Annual Burden on Respondents: 1050 hours.

Comments: Comments are invited on: (1) Whether the proposed collection of the information is necessary for the proper performance of the functions of the agency, including whether the information will have practical utility; (2) the accuracy of the agency's estimate of the burden of the proposed collection of information including the validity of the methodology and assumptions used; (3) ways to enhance the quality, utility and clarity of the information to be collected; and (4) ways to minimize the burden of the collection of information on those who are to respond, including through the use of appropriate automated, electronic, mechanical, or other technological collection techniques or other forms of information technology.

Comments should reference OMB No. 0581–0102 and the Papaya Marketing Order No. 928, and be mailed to Docket Clerk, Fruit and Vegetable Programs, AMS, USDA, P.O. Box 96456, Room 2525–S, Washington, D.C. 20090–6456; Fax (202) 720–5698; or E-mail: moabdocket_clerk@usda.gov. Comments should reference the docket number and the date and page number of this issue of the **Federal Register**. All comments received will be available for public inspection in the Office of the Docket Clerk during regular USDA business hours at 14th and Independence Ave., S.W., Washington, D.C., room 2525–S.

All responses to this notice will be summarized and included in the request for OMB approval. All comments will also become a matter of public record.

Dated: May 16, 2000.

Robert C. Keeney,

Deputy Administrator, Fruit and Vegetable Programs.

[FR Doc. 00–12802 Filed 5–19–00; 8:45 am]

BILLING CODE 3410–02–P

DEPARTMENT OF AGRICULTURE

Agricultural Marketing Service

[Docket No. CN–00–005]

Notice of Request for Extension and Revision of a Currently Approved Information Collection

AGENCY: Agricultural Marketing Service, USDA.

ACTION: Notice and request for comments.

SUMMARY: In accordance with the Paperwork Reduction Act of 1995 (44 U.S.C. Chapter 35), this notice announces the Agricultural Marketing Service's (AMS) intention to request an extension for and revision to a currently approved information collection for the National Research, Promotion, and Consumer Information Programs.

DATES: Comments on this notice must be received on or before July 21, 2000 to be assured of consideration.

Additional Information or Comments: Contact A. Lee Cliburn, Program Appraisal Staff, Cotton Programs, Agricultural Marketing Service, U.S. Department of Agriculture, P.O. Box 96456, Rm. 2633–South Building, Washington, DC 20090, Telephone (202–720–2145) and Fax (202–690–1718).

SUPPLEMENTARY INFORMATION:

Title: National Research, Promotion, and Consumer Information Programs.

OMB Number: 0581–0093.

Expiration Date of Approval: Current expiration date is 11/30/00.

Type of Request: Extension and revision of a currently approved information collection.

Abstract: National research and promotion programs are designed to strengthen the position of a commodity in the marketplace, maintain and expand existing domestic and foreign markets, and develop new uses and markets for specified agricultural commodities. The U.S. Department of Agriculture the responsibility for implementing and overseeing programs

for a variety of commodities including cotton, dairy, eggs, beef, pork, soybeans, honey, potatoes, watermelons, mushrooms, kiwifruit, popcorn, and olive oil. The enabling legislation includes the Cotton Research and Promotion Act of 1966 [7 U.S.C. 2101–2118]; the Dairy Production Stabilization Act of 1983 [7 U.S.C. 4501–4513]; the Fluid Milk Promotion Act of 1990 [7 U.S.C. 6401–6417]; the Egg Research and Consumer Information Act [7 U.S.C. 4301–4319]; the Beef Promotion and Research Act of 1985 [7 U.S.C. 2901–2911]; the Pork Promotion, Research and Consumer Information Act of 1985 [7 U.S.C. 4801–4819]; the Soybean Promotion, Research, and Consumer Information Act [7 U.S.C. 6301–6311]; Honey Research, Promotion, and Consumer Information Act, as amended [7 U.S.C. 4601–4612]; the Potato Research and Promotion Act [7 U.S.C. 2611–2627]; the Watermelon Research and Promotion Act [7 U.S.C. 4901–4916]; the Mushroom Promotion, Research, and Consumer Information Act of 1990 [7 U.S.C. 6101–6112]; the National Kiwifruit Research, Promotion, and Consumer Information Act [7 U.S.C. 7461–7473]; the Popcorn Promotion, Research and Consumer Information Act [7 U.S.C. 7481–7491]; and the Commodity Promotion, Research, and Information Act of 1996 [7 U.S.C. 7401–7425].

These programs carry out projects relating to research, consumer information, advertising, sales promotion, producer information, market development, and product research to assist, improve, or promote the marketing, distribution, and utilization of their respective commodities. Approval of the programs is required through referendum of those who would be covered. Industry boards administer the programs. These boards usually composed of producer, handler, processor, and in some cases, importer and public members, are appointed by the Secretary of Agriculture to administer the programs. The funding for such programs is from assessments on designated industry segments. The appointed boards are responsible for collecting assessments from the affected persons covered under these programs.

The Secretary also approves the boards' budgets, plans, and projects. These responsibilities have been delegated to the Agricultural Marketing Service (AMS). The applicable commodity program areas within AMS have direct oversight of the respective programs.

The information collection requirements in this request are essential to carry out the intents of the various Acts authorizing such programs, thereby providing a means of administering the programs. The objective in carrying out this responsibility includes assuring the following: (1) Funds are collected and properly accounted for; (2) expenditures of all funds are for the purposes authorized by the enabling legislation; and (3) the board's administration of the programs conforms to USDA policy. The applicable commodity programs within AMS have direct oversight of these freestanding programs. The forms covered under this collection require the minimum information necessary to effectively carry out the requirements of the respective orders, and their use is necessary to fulfill the intents of the Acts as expressed in the orders. The information collected is used only by authorized employees of the various boards and authorized employees of USDA.

The boards administering the various programs utilize a variety of forms to carry out the responsibilities. Such forms may include reports concerning status information such as handler and importer reports; transaction reports; exemption from assessment forms and reimbursement forms; forms and information concerning referenda including ballots; forms and informaiton concerning board nominations and selection and acceptance statements; certification of industry organizations; and recordkeeping requirements. The forms and information covered under this information collection require the minimum information necessary to effectively carry out the requirements of the programs and their use is necessary to fulfill the intent of the applicable authorities.

Estimate of Burden: Public reporting burden for this collection of information is estimated to average .0792943 hours per response.

Respondents: Producers, processors, handlers, and/or importers of a variety of agricultural commodities.

Estimated Number of Respondents: Total respondents are estimated to be 354,690.

Estimated Number of Responses per Respondent: Number of responses per respondent is estimated to average 12.389776.

Estimated Total Annual Burden on Respondents: Estimated total annual burden is 348,461 hours.

Comments are invited on: (1) Whether the proposed collection of information is necessary for the proper performance of the functions of the agency, including whether the information will have practical utility; (2) the accuracy of the agency's estimate of the burden of the proposed collection of information, including the validity of the methodology and assumptions used; (3) ways to enhance the quality, utility, and clarity of the information to be collected; and (4) ways to minimize the burden of the collection of information on those who are to respond, including the use of appropriate automated, electronic, mechanical, or other technological collection techniques or other forms of information technology. Comments may be sent to A. Lee Cliburn, Program Appraisal Staff, Cotton Programs, Agricultural Marketing Service, U.S. Department of Agriculture, P.O. Box 96456, Rm. 2633–South Building, Washington, DC 20090. All comments received will be available for public inspection during regular business hours at the same address.

All responses to this notice will be summarized and included in the request for OMB approval. All comments will become a matter of public record.

Dated: May 16, 2000.

Lee Cliburn,

Acting Deputy Administrator, Cotton Programs.

[FR Doc. 00–12803 Filed 5–19–00; 8:45 am]

BILLING CODE 3410–02–P

DEPARTMENT OF AGRICULTURE

Forest Service

Southwest Oregon Province Interagency Executive Committee (PIEC) Advisory Committee

AGENCY: Forest Service, USDA.

ACTION: Notice of meeting.

SUMMARY: The Southwest Oregon PIEC Advisory Committee will meet on June 8, 2000 in Roseburg, Oregon at the Roseburg Bureau of Land Management Office at 777 NW Garden Valley Blvd. The meeting will begin at 9:00 a.m. and continue until 5 p.m. Agenda items to be covered include: (1) Forest Service Roadless Initiative; (2) Public Comment; (3) Implementation Monitoring; (4) Refinement of Province Dead and Wood Policy; and (4) Current issues as perceived by Advisory Committee members.

FOR FURTHER INFORMATION CONTACT: Direct questions regarding this meeting to Roger Evenson, Province Advisory Committee Coordinator, USDA, Forest Service, Umpqua National Forest, 2900 NW Stewart Parkway, Roseburg, Oregon 97470, phone (541) 957–3344.

Dated: May 16, 2000.

Michael D. Hupp,

Acting Designated Federal Official.

[FR Doc. 00–12738 Filed 5–19–00; 8:45 am]

BILLING CODE 3410–11–M

DEPARTMENT OF AGRICULTURE

Natural Resources Conservation Service

Notice of Proposed Change to Section IV of the Field Office Technical Guide (FOTG) of the Natural Resources Conservation Service in Tennessee

AGENCY: Natural Resources Conservation Service (NRCS) in Tennessee, U.S. Department of Agriculture.

ACTION: Notice of Availability of proposed changes in Section IV of the FOTG of the NRCS in Tennessee for review and comment.

SUMMARY: It is the intention of NRCS in Tennessee to issue a revised conservation practice standard, Filter Strip (Code 393), in Section IV of the FOTG.

DATES: Comments will be received on or before June 21, 2000.

FOR FURTHER INFORMATION CONTACT: Inquire in writing to James W. Ford, State Conservationist, Natural Resources Conservation Service (NRCS), 675 U.S. Courthouse, 801 Broadway, Nashville, Tennessee 37203. Copies of the practice standards will be made available upon written request.

SUPPLEMENTARY INFORMATION: Section 343 of the Federal Agriculture Improvement and Reform Act of 1996 states that revisions made after enactment of the law to NRCS state technical guides used to perform highly erodible land and wetland provisions of the law shall be made available for public review and comment. For the next 30 days, the NRCS in Tennessee will receive comments relative to the proposed changes. Following that period, a determination will be made by the NRCS in Tennessee regarding disposition of those comments and a final determination of change will be made.

Dated: May 10, 2000.

James W. Ford,

State Conservationist, Natural Resources Conservation Service, Nashville, Tennessee.

[FR Doc. 00–12782 Filed 5–19–00; 8:45 am]

BILLING CODE 3410–16–M

DEPARTMENT OF COMMERCE

International Trade Administration

North American Free-Trade Agreement, Article 1904 NAFTA Panel Reviews; Request for Panel Review

AGENCY: NAFTA Secretariat, United States Section, International Trade Administration, Department of Commerce.

ACTION: Notice of first request for panel review.

SUMMARY: On May 12, 2000, Nycomed Amersham Canada Limited filed a First Request for Panel Review with the Canadian Section of the NAFTA Secretariat pursuant to Article 1904 of the North American Free Trade Agreement. A second request was filed by Bracco Diagnostics Inc. and Bracco Diagnostics Canada Inc. Panel review was requested of the final determination made by the Canada Customs and Revenue Agency, respecting Certain Contrast Media Used for Radiographic Imaging, Originating in or Exported from the United States of America (Including Puerto Rico). This determination was published in the *Canada Gazette*, Part I, (Vol. 134, No. 16) on April 15, 2000. The NAFTA Secretariat has assigned Case Number CDA-USA-00–1904–01 to this request.

FOR FURTHER INFORMATION CONTACT: Caratina L. Alston, United States Secretary, NAFTA Secretariat, Suite 2061, 14th and Constitution Avenue NW, Washington, DC 20230, (202) 482–5438.

SUPPLEMENTARY INFORMATION: Chapter 19 of the North American Free-Trade Agreement (''Agreement'') establishes a mechanism to replace domestic judicial review of final determinations in antidumping and countervailing duty cases involving imports from a NAFTA country with review by independent binational panels. When a Request for Panel Review is filed, a panel is established to act in place of national courts to review expeditiously the final determination to determine whether it conforms with the antidumping or countervailing duty law of the country that made the determination.

Under Article 1904 of the Agreement, which came into force on January 1, 1994, the Government of the United States, the Government of Canada and the Government of Mexico established *Rules of Procedure for Article 1904 Binational Panel Reviews* (''Rules''). These Rules were published in the **Federal Register** on February 23, 1994 (59 FR 8686).

A first Request for Panel Review was filed with the Canadian Section of the NAFTA Secretariat, pursuant to Article 1904 of the Agreement, on May 12, 2000, requesting panel review of the final determination described above.

The Rules provide that:

(a) A Party or interested person may challenge the final determination in whole or in part by filing a Complaint in accordance with Rule 39 within 30 days after the filing of the first Request for Panel Review (the deadline for filing a Complaint is June 12, 2000);

(b) A Party, investigating authority or interested person that does not file a Complaint but that intends to appear in support of any reviewable portion of the final determination may participate in the panel review by filing a Notice of Appearance in accordance with Rule 40 within 45 days after the filing of the first Request for Panel Review (the deadline for filing a Notice of Appearance is June 26, 2000); and

(c) The panel review shall be limited to the allegations of error of fact or law, including the jurisdiction of the investigating authority, that are set out in the Complaints filed in the panel review and the procedural and substantive defenses raised in the panel review.

Dated: May 15, 2000.

Caratina L. Alston,

United States Secretary, NAFTA Secretariat.

[FR Doc. 00–12729 Filed 5–19–00; 8:45 am]

BILLING CODE 3510–GT–U

DEPARTMENT OF COMMERCE

International Trade Administration

North American Free-Trade Agreement, Article 1904, NAFTA Panel Reviews; Request for Panel Review

AGENCY: NAFTA Secretariat, United States Section, International Trade Administration, Department of Commerce.

ACTION: Notice of First Request for Panel Review.

SUMMARY: On May 4, 2000, Agromex Fertilizantes, S.A. de C.V. filed a First Request for Panel Review with the Mexican Section of the NAFTA Secretariat pursuant to Article 1904 of the North American Free Trade Agreement. Panel review was requested of the final antidumping investigation determination made by the Secretaria de Comercio y Fomento Induustrial, respecting Urea, Originating in the United States of America and the Russian Federation. This determination was published in the Diario Official, on

April 17, 2000. The NAFTA Secretariat has assigned Case Number MEX-USA–00–1904–01 to this request.

FOR FURTHER INFORMATION CONTACT: Caratina L. Alston, United States Secretary, NAFTA Secretariat, Suite 2061, 14th and Constitution Avenue, Washington, D.C. 20230, (202) 482–5438.

SUPPLEMENTARY INFORMATION: Chapter 19 of the North American Free-Trade Agreement (''Agreement'') establishes a mechanism to replace domestic judicial review of final determinations in antidumping and countervailing duty cases involving imports from a NAFTA country with review by independent binational panels. When a Request for Panel Review is filed, a panel is established to act in place of national courts to review expeditiously the final determination to determine whether it conforms with the antidumping or countervailing duty law of the country that made the determination.

Under Article 1904 of the Agreement, which came into force on January 1, 1994, the Government of the United States, the Government of Canada and the Government of Mexico established Rules of Procedure for Article 1904 Binational Panel Reviews (''Rules''). These Rules were published in the **Federal Register** on February 23, 1994 (59 FR 8686).

A first Request for Panel Review was filed with the Mexican Section of the NAFTA Secretariat, pursuant to Article 1904 of the Agreement, on May 4, 2000, requesting panel review of the final determination described above.

The Rules provide that:

(a) A Party or interested person may challenge the final determination in whole or in part by filing a Complaint in accordance with Rule 39 within 30 days after the filing of the first Request for Panel Review (the deadline for filing a Complaint is June 5, 2000);

(b) A Party, investigating authority or interested person that does not file a Complaint but that intends to appear in support of any reviewable portion of the final determination may participate in the panel review by filing a Notice of Appearance in accordance with Rule 40 within 45 days after the filing of the first Request for Panel Review (the deadline for filing a Notice of Appearance is June 19, 2000); and

(c) The panel review shall be limited to the allegations of error of fact or law, including the jurisdiction of the investigating authority, that are set out in the Complaints filed in the panel review and the procedural and substantive defenses raised in the panel review.

Dated: May 15, 2000.

Caratina L. Alston,

United States Secretary, NAFTA Secretariat.

[FR Doc. 00–12728 Filed 5–19–00; 8: 45 am]

BILLING CODE 3510–GT–U

DEPARTMENT OF COMMERCE

National Oceanic and Atmospheric Administration

[I.D. 051200F]

North Pacific Fishery Management Council; Public Meetings

AGENCY: National Marine Fisheries Service (NMFS), National Oceanic and Atmospheric Administration (NOAA), Commerce.

ACTION: Notice of public meetings.

SUMMARY: The North Pacific Fishery Management Council (Council) and its advisory committees will hold public meetings.

DATES: The Council and its advisory committees will meet in Portland, OR the week of June 5, 2000. See **SUPPLEMENTARY INFORMATION** for specific dates and times.

ADDRESSES: All meetings will be held at the Doubletree Hotel-Portland Downtown, 310 SW. Lincoln, Portland, OR.

Council address: North Pacific Fishery Management Council, 605 W. 4th Ave., Suite 306, Anchorage, AK 99501–2252.

FOR FURTHER INFORMATION CONTACT: Council staff, telephone: 907–271–2809.

SUPPLEMENTARY INFORMATION: The Advisory Panel will begin at 8:00 a.m., Monday, June 5, and continue through Thursday, June 8. The Scientific Committee will begin at 8:00 a.m. on Monday, June 5, and continue through Wednesday, June 7.

The Council will begin their plenary session at 8:00 a.m. on Wednesday, June 7, continuing through Monday, June 12. All meetings are open to the public except Executive Sessions which may be held during the week to discuss litigation and/or personnel matters.

Council: The agenda for the Council's plenary session will include the following issues. The Council may take appropriate action on any of the issues identified.

1. Reports

(a) Executive Director's Report.

(b) State Fisheries Report by Alaska Dept. of Fish and Game.

(c) NMFS Management Report.

(d) Enforcement and Surveillance reports by NMFS and the Coast Guard.

2. Observer Program:

(a) Final action on regulatory amendments.

(b) Observer Committee Report.

3. American Fisheries Act:

(a) Final action on inshore cooperative structure.

(b) Initial review of groundfish processor sideboards and excessive share caps.

(c) Review crab processing capacity and activities during 2000 opilio season.

(d) Review methods for allocating pollock to inshore cooperatives, calculations of Pacific cod sideboards, and crab sideboard exemptions.

(e) Status report on development of Supplemental Environmental Impact Statement for the American Fisheries Act.

4. Steller Sea Lion Protection:

(a) Status report on Reasonable and Prudent Alternatives for Pacific cod.

(b) Report on Russian sea lion research and management.

5. Staff Tasking:

(a) Review current tasking and proposals received; direction to staff on new amendments/analyses.

(b) Determine next steps for rationalization of Gulf of Alaska Pacific cod.

(c) Provide staff direction on development of Gulf of Alaska cooperatives.

(d) Provide staff direction for next steps in essential fish habitat stakeholder process; determine need for revisions to crab fishery management plan and halibut regulations to protect corals and sponges.

6. Magnuson-Stevens Act Reauthorization Issues:

Review current legislative proposals and recommendations from Council Chairmen's meeting.

7. Groundfish Management:

(a) Status report on development of groundfish Supplemental Environmental Impact Statement.

(b) Initial review of amendment to revise process for setting annual fishery specifications.

8. Crab Management:

(a) Final action on rebuilding plans for St. Matthew blue and Opilio crabs.

(b) Updates on crab cooperatives and permit buyback program.

(c) Crab Interim Action Committee report on appeals.

Advisory Meetings

Advisory Panel: With the exception of the reports listed under Item 1, the agenda for the Advisory Panel will mirror that of the Council listed above.

Scientific and Statistical Committee (SSC): The Scientific and Statistical Committee will address the following items on the Council agenda:

1. Inshore cooperative structure and groundfish processing sideboards and excessive share caps.
2. Observer program changes.
3. Groundfish Management:
(a) Status report on development of groundfish Supplemental Environmental Impact Statement; and
(b) Initial review of amendment to revise process for setting annual fishery specifications.
4. Steller sea lion protection.
5. Review of halibut charter individual fishing quota program analytical outline.

Other Committee/Workgroup & Industry Meetings

During the meeting week, the following groups will hold meetings to discuss various agenda issues of interest:

Crab Permit Buyback Industry Meeting: Monday, June 5, 7:00 p.m.

Crab Interim Action Committee: Tuesday, June 6, 1:00 p.m.

Crab Cooperative Industry Meeting: Tuesday, June 6, 7:00 p.m.

Gulf of Alaska Cooperative Committee: Thursday, June 8, 6:00 p.m.

Ecosystems Committee: Friday, June 9, 6:00 p.m.

Other committees and workgroups may hold impromptu meetings throughout the meeting week. Such meetings will be announced during regularly-scheduled meetings of the Council, Advisory Panel, and SSC, and will be posted at the hotel.

Although non-emergency issues not contained in this agenda may come before this Council for discussion, in accordance with the Magnuson-Stevens Fishery Conservation and Management Act, those issues may not be the subject of formal Council action during this meeting. Council action will be restricted to those issues specifically identified in the agenda and any issues arising after publication of this notice that require emergency action under section 305(c) of the Magnuson-Stevens Act, provided the public has been notified of the Council's intent to take final action of address the emergency.

Special Accommodations

These meetings are physically accessible to people with disabilities. Requests for sign language interpretation or other auxiliary aids should be directed to Helen Allen at 907–271–2809 at least 7 working days prior to the meeting date.

Dated: May 17, 2000.

Richard W. Surdi,

Acting Director, Office of Sustainable Fisheries, National Marine Fisheries Service.

[FR Doc. 00–12835 Filed 5–19–00; 8:45 am]

BILLING CODE 3510–22–F

DEPARTMENT OF COMMERCE

National Oceanic and Atmospheric Administration

[I.D. 051500A]

Marine Mammals; File No. 782–1446

AGENCY: National Marine Fisheries Service (NMFS), National Oceanic and Atmospheric Administration (NOAA), Commerce.

ACTION: Receipt of application for amendment.

SUMMARY: Notice is hereby given that Alaska Fisheries Science Center, National Marine Mammal Laboratory, 7600 Sand Point Way, NE, Seattle, WA 98115 has requested an amendment to scientific research Permit No. 782–1446.

DATES: Written or telefaxed comments must be received on or before June 21, 2000.

ADDRESSES: The amendment request and related documents are available for review upon written request or by appointment in the following office(s):

Permits and Documentation Division, Office of Protected Resources, NMFS, 1315 East-West Highway, Room 13705, Silver Spring, MD 20910 (301/713–2289);

Alaska Region, National Marine Fisheries Service, NOAA, P.O. Box. 21668, Juneau, AK 99802–1668 (907/586–7221); and

Northwest Region, National Marine Fisheries Service, NOAA, 7600 Sand Point Way, NE, BIN C15700, Seattle, WA 98115–0070 (206/526–6150).

Southwest Region, National Marine Fisheries Service, NOAA,501 West Ocean Blvd., Suite 4200, Long Beach, CA 90802–4213 (562/980–4021).

Written comments or requests for a public hearing on this request should be submitted to the Chief, Permits and Documentation Division, F/PR1, Office of Protected Resources, NMFS, 1315 East-West Highway, Room 13130, Silver Spring, MD 20910. Those individuals requesting a hearing should set forth the specific reasons why a hearing on this particular amendment request would be appropriate.

Comments may also be submitted by facsimile at (301) 713–0376, provided the facsimile is confirmed by hard copy submitted by mail and postmarked no later than the closing date of the comment period. Please note that comments will not be accepted by e-mail or other electronic media.

FOR FURTHER INFORMATION CONTACT: Simona Roberts or Ruth Johnson, 301/713–2289.

SUPPLEMENTARY INFORMATION: The subject amendment to Permit No. 782–1446, issued on May 8, 1998 (63 FR 27265) is requested under the authority of the Marine Mammal Protection Act of 1972, as amended (16 U.S.C. 1361 *et seq.*), the Regulations Governing the Taking and Importing of Marine Mammals (50 CFR part 216), the Endangered Species Act of 1973, as amended (16 U.S.C. 1531 *et seq.*), and the regulations governing the taking, importing, and exporting of endangered and threatened species (50 CFR 222–226).

Permit No. 782–1446 authorizes the permit holder to conduct aerial, ground and boat surveys annually for stock assessment of harbor seals (*Phoca vitulina*), California sea lions (*Zalophus californianus*), Steller sea lions (*Eumetopias jubatus*), and northern elephant seals (*Mirounga angustirostris*). The permit holder requests authorization to amend this permit to chemically immobilize adult male California sea lions in Oregon, Washington, and California for the removal of Satellite-Linked Time Depth Recorders (SLTDR).

In compliance with the National Environmental Policy Act of 1969 (42 U.S.C. 4321 *et seq.*), an initial determination has been made that the activity proposed is categorically excluded from the requirement to prepare an environmental assessment or environmental impact statement.

Concurrent with the publication of this notice in the **Federal Register**, NMFS is forwarding copies of this application to the Marine Mammal Commission and its Committee of Scientific Advisors.

Dated: May 15, 2000.

Ann Terbush,

Chief, Permits and Documentation Division, Office of Protected Resources, National Marine Fisheries Service.

[FR Doc. 00–12837 Filed 5–19–00; 8: 45 am]

BILLING CODE 3510–22–F

DEPARTMENT OF COMMERCE

National Oceanic and Atmospheric Administration

DEPARTMENT OF THE INTERIOR

U.S. Fish and Wildlife Service

[I.D. 032300B]

Marine Mammals; File No. 960–1528–00

AGENCIES: National Marine Fisheries Service (NMFS), National Oceanic and Atmospheric Administration (NOAA), Commerce; U.S. Fish and Wildlife Service (USFWS), Interior.

ACTION: Issuance of permit.

SUMMARY: Notice is hereby given that Museum of Natural History Collections, Department of Environmental Studies, University of California, Santa Cruz, CA 95064 [Principal Investigator: Jeff Davis] has been issued a permit to take collect, import/export marine mammal specimens of the Orders Cetacea, Pinnipedia and Sirenia for purposes of scientific research and for deposit into a museum collection.

ADDRESSES: The permit and related documents are available for review upon written request or by appointment in the following office(s):

Permits and Documentation Division, Office of Protected Resources, NMFS, 1315 East-West Highway, Room 13705, Silver Spring, MD 20910 (301/713–2289); and

Regional Administrator, Southwest Region, NMFS, 501 West Ocean Blvd., Suite 4200, Long Beach, CA 90802–4213 (562/980–4001)

FOR FURTHER INFORMATION CONTACT: Ruth Johnson, 301/713–2289.

SUPPLEMENTARY INFORMATION: On October 8, 1999, notice was published in the **Federal Register** (64 FR 54907) that a request for a scientific research permit to take marine mammal specimen had been submitted by the above-named organization. The requested permit has been issued under the authority of the Marine Mammal Protection Act of 1972, as amended (16 U.S.C. 1361 *et seq.*), the Regulations Governing the Taking and Importing of Marine Mammals (50 CFR part 216), the Endangered Species Act of 1973, as amended (ESA; 16 U.S.C. 1531 *et seq.*), the regulations governing the taking, importing, and exporting of endangered and threatened species (50 CFR parts 222–226), and the Fur Seal Act of 1966, as amended (16 U.S.C. 1151 *et seq.*).

Issuance of this permit, as required by the ESA, was based on a finding that such permit (1) was applied for in good faith, (2) will not operate to the disadvantage of the endangered species which is the subject of this permit, and (3) is consistent with the purposes and policies set forth in section 2 of the ESA.

Dated: May 16, 2000.

Ann D. Terbush,

Chief, Permits and Documentation Division, Office of Protected Resources, National Marine Fisheries Service.

Dated: May 11, 2000.

Kristen Nelson,

Chief, Branch of Permits, U.S. Fish and Wildlife Service, Department of the Interior.

[FR Doc. 00–12838 Filed 5–19–00; 8:45 am]

BILLING CODE 3510–22–F

DEPARTMENT OF COMMERCE

National Oceanic and Atmospheric Administration

[I.D. 051500C]

Guidelines for Economic Analysis of Fishery Management Actions

AGENCY: National Marine Fisheries Service (NMFS), National Oceanic and Atmospheric Administration (NOAA), Commerce.

ACTION: Notice of availability; request for comments.

SUMMARY: The Guidelines for Economic Analysis of Fishery Management Actions (Guidelines) provide guidance on meeting the procedural and analytical requirements of Executive Order (E.O.) 12866 and the Regulatory Flexibility Act(RFA)for regulatory actions of federally managed fisheries. Specifically, the guidelines include a general framework for conducting economic analyses of regulatory actions; recommend that a preliminary regulatory economic evaluation be conducted early in the regulatory process to provide information on the impacts of proposed measures to the public and decision makers; outline the process for doing the regulatory impact review for meeting analytical requirements, including information requirements, analytical procedures, and methodologies; outline the steps for fulfilling the requirements of the Regulatory Flexibility Act; discuss the relationship of the Regulatory Flexibility Act to other applicable law; and identify ways of involving small entities in the rulemaking process.

DATES: Comments and information must be received no later than June 21, 2000.

ADDRESSES: Comments on the guidelines should be addressed to Theo R. Brainerd, Regulatory Services Division (Stn. 13212), Office of Sustainable Fisheries, NOAA/NMFS, 1315 East West Highway, Silver Spring, Maryland 20910.

Comments may also be sent via facsimile (fax) to 301–713–0696. A copy of the draft guidelines is available through the internet at: <<http: // www.nmfs.gov/sfa/>> under ''Proposed & Final Rules, and Documents for Public Comment.''

FOR FURTHER INFORMATION CONTACT: Theo R. Brainerd, NMFS, 301–713–2337.

SUPPLEMENTARY INFORMATION:

Background

The objective of E.O. 12866 (58 FR 51735, October 4, 1993) is to improve the Federal regulatory system. NMF complies with E.O. 12866 by preparing a Regulatory Impact Review (RIR) which includes an analysis of the economic effects of the proposed action and alternative actions. The RIR is intended to assist Councils and the NMFS in selecting the regulatory approach that maximizes net benefits (including potential economic, environmental, public health and safety, and other advantages; distributive impacts, and equity issues), unless a statute requires another regulatory approach.

The purpose of the RFA (5 U.S.C. 601 *et seq.*) is to establish as a principle of regulatory issuance that agencies shall endeavor, consistent with the objectives of the regulatory action and applicable statutes, to fit regulatory and informational requirements to the scale of businesses, organizations, and governmental jurisdictions subject to the regulation. NMFS conducts a Regulatory Flexibility Act Analysis (RFAA) to assess the impacts of the proposed/final rule on small entities and describes steps the agency has taken to minimize any significant economic impact on small entities while achieving regulatory goals.

In comparison to the previous RIR/RFAA guidelines, these guidelines:

Incorporate the revisions to the Regulatory Flexibility Act made by the Small Business Regulatory Enforcement Act;

Revise the basis the agency will use to certify that a proposed regulation will not have a significant economic impact on a substantial number of small entities;

Place greater emphasis on the need for the Councils and NMFS to have draft analyses early in the FMP development process and final analyses available prior to a decision on the preferred course of action. These analyses would also be a source of information for public comment on the expected effects of the alternatives under consideration;

Provide recommendations concerning key topic areas and organization for the regulatory analyst to consider when developing and revising the regulatory analysis; and

Based on the growing regulatory emphasis on protected resources and habitat, recommend that analysts highlight, where appropriate, the effects on the non-consumptive uses of fishery, other living marine resources, and the ecological benefits derived from these resources and their habitats.

Dated: May 17, 2000.

Bruce C. Morehead,

Acting Director, Office of Sustainable Fisheries, National Marine Fisheries Service.

[FR Doc. 00–12834 Filed 5–19–00; 8: 45 am]

BILLING CODE 3510–22–F

COMMITTEE FOR THE IMPLEMENTATION OF TEXTILE AGREEMENTS

Adjustment of import Limits for Certain Cotton and Man-Made Fiber Textile Products Produced or Manufactured in the Dominican Republic

May 16, 2000.

AGENCY: Committee for the Implementation of Textile Agreements (CITA).

ACTION: Issuing a directive to the Commissioner of Customs adjusting limits.

EFFECTIVE DATE: May 22, 2000.

FOR FURTHER INFORMATION CONTACT: Naomi Freeman, International Trade Specialist, Office of Textiles and Apparel, U.S. Department of Commerce, (202) 482–4212. For information on the quota status of these limits, refer to the Quota Status Reports posted on the bulletin boards of each Customs port, call (202) 927–5850, or refer to the U.S. Customs website at http://www.customs.ustreas.gov. For information on embargoes and quota re-openings, call (202) 482–3715.

SUPPLEMENTARY INFORMATION:

Authority: Section 204 of the Agricultural Act of 1956, as amended (7 U.S.C. 1854); Executive Order 11651 of March 3, 1972, as amended.

The current limits for certain categories are being adjusted for special shift.

A description of the textile and apparel categories in terms of HTS numbers is available in the CORRELATION: Textile and Apparel Categories with the Harmonized Tariff Schedule of the United States (see **Federal Register** notice 64 FR 71982, published on December 22, 1999). Also see 64 FR 50495, published on September 17, 1999.

D. Michael Hutchinson,

Acting Chairman, Committee for the Implementation of Textile Agreements.

Committee for the Implementation of Textile Agreements

May 16, 2000.

Commissioner of Customs,
Department of the Treasury, Washington, DC 20229.

Dear Commissioner: This directive amends, but does not cancel, the directive issued to you on September 13, 1999, by the Chairman, Committee for the Implementation of Textile Agreements. That directive concerns imports of certain cotton, wool and man-made fiber textile products, produced or manufactured in the Dominican Republic and exported during the twelve-month period which began on January 1, 2000 and extends through December 31, 2000.

Effective on May 22, 2000, you are directed to adjust the current limits for the following categories, as provided for under the Uruguay Round Agreement on Textiles and Clothing:

Category	Adjusted twelve-month limit [1]
338/638	1,036,327 dozen.
339/639	1,423,401 dozen.

[1] The limits have not been adjusted to account for any imports exported after December 31, 1999.

The Committee for the Implementation of Textile Agreements has determined that these actions fall within the foreign affairs exception of the rulemaking provisions of 5 U.S.C. 553(a)(1).

Sincerely,

D. Michael Hutchinson,

Acting Chairman, Committee for the Implementation of Textile Agreements.

[FR Doc. 00–12776 Filed 5–19–00; 8:45 am]

BILLING CODE 3510–DR–F

COMMITTEE FOR THE IMPLEMENTATION OF TEXTILE AGREEMENTS

Adjustment of Import Limits for Certain Cotton, Wool, Man-Made Fiber, Silk Blend and Other Vegetable Fiber Textiles and Textile Products Produced or Manufactured in Indonesia

May 16, 2000.

AGENCY: Committee for the Implementation of Textile Agreements (CITA).

ACTION: Issuing a directive to the Commissioner of Customs reducing limits.

EFFECTIVE DATE: May 23, 2000.

FOR FURTHER INFORMATION CONTACT: Ross Arnold, International Trade Specialist, Office of Textiles and Apparel, U.S. Department of Commerce, (202) 482–4212. For information on the quota status of these limits, refer to the Quota Status Reports posted on the bulletin boards of each Customs port, call (202) 927–5850, or refer to the U.S. Customs website at http://www.customs.gov. For information on embargoes and quota re-openings, call (202) 482–3715.

SUPPLEMENTARY INFORMATION:

Authority: Section 204 of the Agricultural Act of 1956, as amended (7 U.S.C. 1854); Executive Order 11651 of March 3, 1972, as amended.

The current limits for certain categories are being reduced for carryforward used.

A description of the textile and apparel categories in terms of HTS numbers is available in the CORRELATION: Textile and Apparel Categories with the Harmonized Tariff Schedule of the United States (see **Federal Register** notice 64 FR 71982, published on December 22, 1999). Also see 64 FR 54870, published on October 8, 1999.

D. Michael Hutchinson,

Acting Chairman, Committee for the Implementation of Textile Agreements.

Committee for the Implementation of Textile Agreements

May 16, 2000.

Commissioner of Customs,
Department of the Treasury, Washington, DC 20229.

Dear Commissioner: This directive amends, but does not cancel, the directive issued to you on October 4, 1999, by the Chairman, Committee for the Implementation of Textile Agreements. That directive concerns imports of certain cotton, wool, man–made fiber, silk blend and other vegetable fiber textiles and textile products, produced or manufactured in Indonesia and exported during the twelve-month period which began on January 1, 2000 and extends through December 31, 2000.

Effective on May 23, 2000, you are directed to reduce the limits for the categories listed below, as provided for under the Uruguay Round Agreement on Textiles and Clothing:

Category	Adjusted twelve-month limit [1]
Levels in Group I	
200	978,348 kilograms.
300/301	4,458,303 kilograms.
338/339	1,316,416 dozen.
340/640	1,621,199 dozen.
342/642	406,864 dozen.
345	481,695 dozen.
347/348	1,783,321 dozen.
360	1,453,677 numbers.
369–S [2]	1,053,142 kilograms.
634/635	324,240 dozen.
647/648	3,534,649 dozen.

Category	Adjusted twelve-month limit [1]
Group II	
201, 218, 220, 222–224, 226, 227, 237, 239pt. [3], 332, 333, 352, 359–O [4], 362, 363, 369–O [5], 400, 410, 414, 431, 434, 435, 436, 438, 440, 442, 444, 459pt. [6], 464, 469pt. [7], 603, 604–O [8], 606, 607, 621, 622, 624, 633, 649, 652, 659–O [9], 666, 669–O [10], 670–O [11], 831, 833–836, 838, 840, 842–846, 850–852, 858 and 859pt. [12], as a group.	112,319,410 square meters equivalent.

[1] The limits have not been adjusted to account for any imports exported after December 31, 1999.

[2] Category 369–S: only HTS number 6307.10.2005.

[3] Category 239pt.: only HTS number 6209.20.5040 (diapers).

[4] Category 359–O: all HTS numbers except 6103.42.2025, 6103.49.8034, 6104.62.1020, 6104.69.8010, 6114.20.0048, 6114.20.0052, 6203.42.2010, 6203.42.2090, 6204.62.2010, 6211.32.0010, 6211.32.0025, 6211.42.0010 (Category 359–C); 6112.39.0010, 6112.49.0010, 6211.11.8010, 6211.11.8020, 6211.12.8010, 6211.12.8020 (Category 359–S); and 6406.99.1550 (Category 359pt.).

[5] Category 369–O: all HTS numbers except 6307.10.2005 (Category 369–S); 5601.10.1000, 5601.21.0090, 5701.90.1020, 5701.90.2020, 5702.10.9020, 5702.39.2010, 5702.49.1020, 5702.49.1080, 5702.59.1000, 5702.99.1010, 5702.99.1090, 5705.00.2020 and 6406.10.7700 (Category 369pt.).

[6] Category 459pt.: all HTS numbers except 6405.20.6030, 6405.20.6060, 6405.20.6090, 6406.99.1505 and 6406.99.1560.

[7] Category 469pt.: all HTS numbers except 5601.29.0020, 5603.94.1010 and 6406.10.9020.

[8] Category 604–O: all HTS numbers except 5509.32.0000 (Category 604–A).

[9] Category 659–O: all HTS numbers except 6103.23.0055, 6103.43.2020, 6103.43.2025, 6103.49.2000, 6103.49.8038, 6104.63.1020, 6104.63.1030, 6104.69.1000, 6104.69.8014, 6114.30.3044, 6114.30.3054, 6203.43.2010, 6203.43.2090, 6203.49.1010, 6203.49.1090, 6204.63.1510, 6204.69.1010, 6210.10.9010, 6211.33.0010, 6211.33.0017, 6211.43.0010 (Category 659–C); 6112.31.0010, 6112.31.0020, 6112.41.0010, 6112.41.0020, 6112.41.0030, 6112.41.0040, 6211.11.1010, 6211.11.1020, 6211.12.1010 and 6211.12.1020 (Category 659–S); 6406.99.1510 and 6406.99.1540 (Category 659pt.).

[10] Category 669–O: all HTS numbers except 6305.32.0010, 6305.32.0020, 6305.33.0010, 6305.33.0020 and 6305.39.0000 (Category 669–P); 5601.10.2000, 5601.22.0090, 5607.49.3000, 5607.50.4000, 6406.10.9040 (Category 669pt.).

[11] Category 670–O: all HTS numbers except 4202.12.8030, 4202.12.8070, 4202.92.3020, 4202.92.3031, 4202.92.9026 and 6307.90.9907 (Category 670–L).

[12] Category 859pt.: only HTS numbers 6115.19.8040, 6117.10.6020, 6212.10.5030, 6212.10.9040, 6212.20.0030, 6212.30.0030, 6212.90.0090, 6214.10.2000 and 6214.90.0090.

The Committee for the Implementation of Textile Agreements has determined that these actions fall within the foreign affairs exception to the rulemaking provisions of 5 U.S.C. 553(a)(1).

Sincerely,

D. Michael Hutchinson,

Acting Chairman, Committee for the Implementation of Textile Agreements.

[FR Doc. 00–12777 Filed 5–19–00; 8:45 am]

BILLING CODE 3510–DR–F

COMMITTEE FOR THE IMPLEMENTATION OF TEXTILE AGREEMENTS

Adjustment of Import Limits for Certain Cotton, Wool and Man-Made Fiber Textile Products Produced or Manufactured in Romania

May 17, 2000.

AGENCY: Committee for the Implementation of Textile Agreements (CITA).

ACTION: Issuing a directive to the Commissioner of Customs adjusting limits.

EFFECTIVE DATE: May 23, 2000.

FOR FURTHER INFORMATION CONTACT: Naomi Freeman, International Trade Specialist, Office of Textiles and Apparel, U.S. Department of Commerce, (202) 482–4212. For information on the quota status of these limits, refer to the Quota Status Reports posted on the bulletin boards of each Customs port, call (202) 927–5850, or refer to the U.S. Customs website at http://www.customs.gov. For information on embargoes and quota re-openings, call (202) 482–3715.

SUPPLEMENTARY INFORMATION:

Authority: Section 204 of the Agricultural Act of 1956, as amended (7 U.S.C. 1854); Executive Order 11651 of March 3, 1972, as amended.

The current limits for certain categories are being adjusted, variously, for carryover, carryforward, swing and special shift.

A description of the textile and apparel categories in terms of HTS numbers is available in the CORRELATION: Textile and Apparel Categories with the Harmonized Tariff Schedule of the United States (see **Federal Register** notice 64 FR 71982, published on December 22, 1999). Also see 64 FR 71116, published on December 20, 1999.

D. Michael Hutchinson,

Acting Chairman, Committee for the Implementation of Textile Agreements.

Committee for the Implementation of Textile Agreements

May 17, 2000.

Commissioner of Customs,
Department of the Treasury, Washington, DC 20229.

Dear Commissioner: This directive amends, but does not cancel, the directive issued to you on December 14, 1999, by the Chairman, Committee for the Implementation of Textile Agreements. That directive concerns imports of certain cotton, wool, man-made fiber, silk blend and other vegetable fiber textiles and textile products, produced or manufactured in Romania and exported during the twelve-month period beginning on January 1, 2000 and extending through December 31, 2000.

Effective on May 23, 2000, you are directed to adjust the current limits for the following categories, as provided for under the Uruguay Round Agreement on Textiles and Clothing:

Category	Adjusted twelve-month limit [1]
315	3,972,521 square meters.
410	141,672 square meters.
435	13,505 dozen.
443	106,580 numbers.
444	34,384 numbers.
447/448	32,456 dozen.
647/648	243,780 dozen.

[1] The limits have not been adjusted to account for any imports exported after December 31, 1999.

The Committee for the Implementation of Textile Agreements has determined that these actions fall within the foreign affairs exception of the rulemaking provisions of 5 U.S.C. 553(a)(1).

Sincerely,

D. Michael Hutchinson,

Acting Chairman, Committee for the Implementation of Textile Agreements.

[FR Doc. 00–12778 Filed 5–19–00; 8:45 am]

BILLING CODE 3510–DR–F

DEPARTMENT OF EDUCATION

[CFDA No. 84.926B]

Office of Elementary and Secondary Education—Arts in Education Competitive Grant Program; Notice Inviting Applications for New Awards for Fiscal Year (FY) 2000

Purpose of Program

The goal of this grant competition is to provide assistance to local educational agencies (LEAs) on behalf of eligible schools to support media

literacy projects. ''Media literacy'' refers to the ability to understand and interpret the artistic content of images, including violent messages, transmitted through the electronic media.

SUPPLEMENTARY INFORMATION:

Background

Many studies have explored the relationship between children's viewing of violence through the media and their engaging in violent behavior. While there is little consensus among these studies regarding the impact that the electronic media have on youth violence, the Secretary believes that instruction that helps young people to critically analyze media messages about violence can help to prevent youth violence. Accordingly, this grant competition focuses on media literacy projects that include opportunities for youth to engage in non-violent, innovative arts programming. These projects will support model partnerships between schools and arts-based organizations to demonstrate new methods of improving the interpretive and creative skills of young people in dealing with the media arts. Young people will learn how to interpret the messages they receive on a daily basis through the media, and also how to engage in the creative process in developing better alternatives to media programming that include violent content.

Today's students—tomorrow's citizens and leaders in our democracy—will need a different set of understandings and skills in communications if they are to succeed in the global society and economy that are fueled by new media technologies. CD–ROMs, video games, music videos, interactive communications facilitated by personal computers, and the World Wide Web, as well as such older electronic media as television shows, movies, and recorded music, command an increasing amount of the attention and time of our children. We must help them learn to ''read'' and evaluate images as well as text. These technologies can be used to create and communicate ideas that portray alternatives to violence, drug use, and disrespect.

Eligible Applicants: LEAs with one or more schools where 75 percent or more of the children are from low-income families, based on the poverty criteria described in Title I Section 1113(a)(5) of the Elementary and Secondary Education Act. Applicants must submit evidence of their eligibility. For this purpose applicants may submit records kept for the purpose of Title I of the Elementary and Secondary Education Act that demonstrates that proof of eligibility.

Note: Potential applicants are reminded that, under the absolute priority published elsewhere in this notice, the Secretary will only fund under this competition media literacy projects in *schools* where the number of children from low-income families equals or exceeds 75 percent.

Applications Available: May 22, 2000.

Deadline for Transmittal of Application: July 21, 2000.

Deadline for Intergovernmental Review: August 21, 2000.

Estimated Available Funds: $990,000.

Estimated Range of Awards: $50,000 to $150,000.

Estimated Average Size of Awards: $100,000.

Estimated Number of Awards: 8–10.

Project Period: Up to 36 months.

Note: The Department is not bound by any estimates in this notice. Funding estimates are for the first year of the project period only. Funding for the second and third years is subject to the availability of funds and the approval of continuation awards (34 CFR 75.253).

Applicable Regulations: The Education Department General Administrative Regulations (EDGAR) in 34 CFR Parts 75, 77, 79, 80, 81, 82, 85, 86, 97, 98, and 99.

Priority: Absolute Priority: The Secretary gives absolute priority to media literacy projects, implemented in schools where the number of children from low-income families equals or exceeds 75 percent, that are designed both to: (1) enable students in those schools to critically interpret and analyze the images, including violent messages, transmitted through the electronic media, and (2) help students in those schools to create their own media-based arts projects presenting alternative non-violent messages through the use of film, video, hypermedia, website design and other contemporary communications media. Applicants should clearly state in the abstract how their application addresses both elements of this priority. Only projects that meet both elements of this priority will be considered for funding.

Selection Criteria: The Secretary uses the selection criteria published in 34 CFR 75.209 and 75.210 to evaluate applications for the Arts in Education Competitive Grant Program. The application package includes the selection criteria and the points assigned to each criterion.

Waiver of Proposed Rulemaking: It is the Secretary's practice, in accordance with the Administrative Procedure Act (5 U.S.C. 553) to offer interested parties the opportunity to comment on proposed rules. Section 437(d)(1) of the General Education Provisions Act (GEPA), however, exempts from this requirement rules that apply to the first competition under a new or substantially revised program. Funding was provided for this new initiative in the fiscal year 2000 appropriations act enacted in October 1999. The Secretary, in accordance with section 437(d)(1) of GEPA, has decided to forego public comment in order to ensure timely grant awards.

For Further Information or Applications: Shelton Allen, U.S. Department of Education, 400 Maryland Avenue, SW, FOB6, Room 3C126, Washington, DC 20202–6140. Telephone: (202) 260–2487 or fax: (202) 205–5630. The e-mail address for Mr. Allen is: shelton—allen@ed.gov

If you use a telecommunications device for the deaf (TDD), you may call the Federal Information Relay Service (FIRS) at 1–888–877–8339.

Individuals with disabilities may obtain this document in an alternative format (e.g., Braille, large print, audiotape, or computer diskette) on request to the contact person listed in the preceding paragraph. Individuals with disabilities may obtain a copy of the application package in an alternate format, also, by contacting that person. However, the Department is not able to reproduce in an alternate format the standard forms included in the application package.

Electronic Access to This Document

You may view this document, as well as all other Department of Education documents published in the **Federal Register**, in text or Adobe Portable Document Format (PDF) on the Internet at either of the following sites:

http://ocfo.ed.gov/fedreg.htm

http://www.ed.gov/news.html

To use the PDF you must have the Adobe Acrobat Reader, which is available free at either of the previous sites. If you have questions about using the PDF, call the U.S. Government Printing Office (GPO), toll free, at 1–888–293–6498; or in the Washington, DC, area at (202) 512–1530.

Note: The official version of this document is the document published in the **Federal Register**. Free Internet access to the official edition of the **Federal Register** and the Code of Federal Regulations is available on GPO Access at: http://www.access.gpo.gov/nara/index.html.

Program Authority: 20 U.S.C. 8091.

Dated: May 16, 2000.

Michael Cohen,

Assistant Secretary for Elementary and Secondary Education.

[FR Doc. 00–12760 Filed 5–19–00; 8:45 am]

BILLING CODE 4000–01–P

DEPARTMENT OF ENERGY

DOE Response to Recommendation 2000–2 of the Defense Nuclear Facilities Safety Board, Configuration Management, Vital Safety Systems

AGENCY: Department of Energy.

ACTION: Notice.

SUMMARY: The Defense Nuclear Facilities Safety Board Recommendation 2000–2, concerning the control of safety system configuration, was published in the **Federal Register** on March 16, 2000 (65 FR 14255). Under section 315(b) of the Atomic Energy Act of 1954, as amended, 42 U.S.C. 2286d(b), the Department of Energy was required to transmit a response to the Defense Nuclear Facilities Safety Board by April 28, 2000. The Secretary's timely response follows.

DATES: Comments, data, views, or arguments concerning the Secretary's response are due on or before June 21, 2000.

ADDRESSES: Send comments, data, views, or arguments concerning the Secretary's response to: Defense Nuclear Facilities Safety Board, 625 Indiana Avenue NW, Suite 700, Washington, DC 20004.

FOR FURTHER INFORMATION CONTACT: Mr. Steve Cary, Senior Advisor to the Assistant Secretary for Environment, Safety and Health, Department of Energy, 1000 Independence Avenue SW, Washington, DC 20585.

Issued in Washington, DC on April 28, 2000.

Michael A. Mikolanis,

Office of the Departmental Representative to the Defense Nuclear Facilities Safety Board.

The Honorable John T. Conway, Chairman, Defense Nuclear Facilities Safety Board, 625 Indiana Avenue, NW, Suite 700, Washington, DC 20004–2901

Dear Mr. Chairman: The Department of Energy (DOE) acknowledges receipt of Defense Nuclear Facilities Safety Board (Board) Recommendation 2000–2, issued on March 8, 2000, regarding safety systems vital to the protection of the public, workers, and the environment. Along with the analysis contained in the March 2000 assessment prepared by the Office of the Assistant Secretary for Environment, Safety and Health on the impact of safety program weaknesses upon ventilation and confinement ventilation systems that perform safety functions, the DOE has completed a preliminary analysis of the issues raised in the Board's recommendation. The conclusions drawn from both of these analyses are consistent with the safety issues described in Recommendation 2000–2.

The Department accepts the recommendations contained in Recommendation 2000–2 and will develop an implementation plan to accomplish the following actions:

1. Development of expert-based guidelines for surveying and assessing confinement ventilation systems and implementation of a plan to identify and correct root cause deficiencies.

2. Incorporation of open commitments remaining in the action plan addressing safety issues related to High Efficiency Particulate Air filters.

3. Evaluation of existing practices and industry models for use in establishing a cognizant system engineer concept to strengthen the engineering resources available for facility configuration management.

4. Assessment of the availability and sufficiency of DOE expertise, identification of actions necessary to ensure expertise can be brought to bear in the life-cycle management of vital safety systems and that Federal technical expertise on safety systems is available to interface with operating contractors when significant system problems arise.

5. Review of line oversight of contractor programs to determine whether safety systems, as well as programs essential to system operability, are being included in those programs. As necessary, identify corrective actions to improve implementation of line oversight programs.

I have asked Mr. Steven Cary, Senior Advisor to the Assistant Secretary for Environment, Safety and Health, to serve as the responsible manager for this recommendation. Mr. Cary will be the principal point of contact with the Board for this recommendation, and he will work with you and your staff to develop an acceptable implementation plan that meets our mutual expectations. If you have questions, please contact him at (202) 586–6151.

Yours sincerely,

Bill Richardson

[FR Doc. 00–12761 Filed 5–19–00; 8:45 am]

BILLING CODE 6450–01–P

DEPARTMENT OF ENERGY

Environmental Management Site-Specific Advisory Board, Nevada

AGENCY: Department of Energy.

ACTION: Notice of Open Meeting.

SUMMARY: This notice announces a meeting of the Environmental Management Site-Specific Advisory Board (EM SSAB), Nevada Test Site. The Federal Advisory Committee Act (Pub. L. 92–463, 86 Stat. 770) requires that public notice of these meetings be announced in the **Federal Register**.

DATES: Wednesday, June 7, 2000: 6:30 p.m.–9 p.m.

ADDRESSES: Amargosa Valley Community Center, 821 E. Farm Road, Amargosa Valley, NV 89020.

FOR FURTHER INFORMATION CONTACT: Kevin Rohrer, U.S. Department of Energy, Office of Environmental Management, P.O. Box 98518, Las Vegas, Nevada 89193–8513, phone: 702–295–0197.

SUPPLEMENTARY INFORMATION:

Purpose of the Board: The purpose of the Advisory Board is to make recommendations to DOE and its regulators in the areas of environmental restoration, waste management, and related activities.

Tentative Agenda:

1. Discussion and review of additional underground water test area funding. Copies of the final agenda will be available at the meeting. Public Participation: The meeting is open to the public. Written statements may be filed with the Committee either before or after the meeting. Individuals who wish to make oral statements pertaining to agenda items should contact Kevin Rohrer, at the telephone number listed above. Requests must be received 5 days prior to the meeting and reasonable provision will be made to include the presentation in the agenda. The Deputy Designated Federal Officer is empowered to conduct the meeting in a fashion that will facilitate the orderly conduct of business.

Minutes: The minutes of this meeting will be available for public review and copying at the Freedom of Information Public Reading Room, 1E–190, Forrestal Building, 1000 Independence Avenue, SW, Washington, DC 20585 between 9 a.m. and 4 p.m., Monday–Friday, except Federal holidays. Minutes will also be available by writing to Kevin Rohrer at the address listed above.

Issued at Washington, DC on May 16, 2000.

Rachel M. Samuel,

Deputy Advisory Committee Management Officer.

[FR Doc. 00–12762 Filed 5–19–00; 8:45 am]

BILLING CODE 6450–01–P

DEPARTMENT OF ENERGY

Environmental Management Site-Specific Advisory Board, Rocky Flats

AGENCY: Department of Energy.

ACTION: Notice of Open Meeting.

SUMMARY: This notice announces a meeting of the Environmental

Management Site-Specific Advisory Board (EM SSAB), Rocky Flats. The Federal Advisory Committee Act (Pub. L. 92–463, 86 Stat. 770) requires that public notice of these meetings be announced in the **Federal Register**.

DATES: Thursday, June 1, 2000, 6 p.m.—9:30 p.m.

ADDRESSES: College Hill Library, Front Range Community College, 3705 West 122th Avenue, Westminster, CO.

FOR FURTHER INFORMATION CONTACT: Ken Korkia, Board/Staff Coordinator, Rocky Flats Citizens Advisory Board, 9035 North Wadsworth Parkway, Suite 2250, Westminster, CO 80021; telephone (303) 420–7855; fax (303) 420–7579.

SUPPLEMENTARY INFORMATION:

Purpose of the Board: The purpose of the Board is to make recommendations to DOE and its regulators in the areas of environmental restoration, waste management, and related activities.

Tentative Agenda:

1. Regular Update—Environmental Protection Agency
2. Board 2001 Work Plan Prioritization
3. Presentations on Future Site Use Proposals—by Staff from Congressman Udall's and Senator Allard's Offices
4. Presentation on Rock Creek Reserve Natural Resources Management Plan
5. Other Board business may be conducted as necessary

Public Participation: The meeting is open to the public. Written statements may be filed with the Board either before or after the meeting. Individuals who wish to make oral statements pertaining to agenda items should contact Ken Korkia at the address or telephone number listed above. Requests must be received at least five days prior to the meeting and reasonable provision will be made to include the presentation in the agenda. The Deputy Designated Federal Officer is empowered to conduct the meting in a fashion that will facilitate the orderly conduct of business. Each individual wishing to make public comment will be provided a maximum of five minutes to present their comments. This notice is being published less than 15 days before the date of the meeting due to programmatic issues that had to be resolved prior to publication.

Minutes: The minutes of this meeting will be available for public review and copying at the Freedom of Information Public Reading Room, 1E–190, Forrestal Building, 1000 Independence Avenue, SW, Washington, DC 20585 between 9 a.m. and 4 p.m., Monday—Friday, except Federal holidays. Minutes will also be available at the Public Reading Room located at the Board's office at 9035 North Wadsworth Parkway, Suite 2250, Westminster, CO 80021; telephone (303) 420–7855. Hours of operation for the Public Reading Room are 9 a.m. to 4 p.m. Monday through Friday. Minutes will also be made available by writing or calling Deb Thompson at the address or telephone number listed above.

Issued at Washington, DC on May 16, 2000.

Rachel M. Samuel,

Deputy Advisory Committee Management Officer.

[FR Doc. 00–12763 Filed 5–19–00; 8:45 am]

BILLING CODE 6450–01–P

DEPARTMENT OF ENERGY

Federal Energy Regulatory Commission

[Docket No. RP00–277–000]

Canyon Creek Compression Company; Notice of Tariff Filing

May 16, 2000.

Take notice that on May 10, 2000, Canyon Creek Compression Company (Canyon) tendered for filing to be a part of its FERC Gas Tariff, Sixth Revised Volume No.1, the tariff sheets listed on Appendix A to the filing, to be effective June 1, 2000.

Canyon states that these tariff sheets are being filed in compliance with the Commission's Order No. 587–G issued April 16, 1998 in Docket No. RM96–1–008, which order relates to interstate pipelines' business transactions using Internet communication as well as to various issues relating to the standardization of these business communications using the Internet.

Canyon requested any waivers which may be required for the tendered tariff sheets to become effective June 1, 2000, consistent with Order Nos. 587–G and 587–I.

Canyon states that copies of the filing have been mailed to its customers, interested state commissions and all parties set out the Commission's official service list in Docket No. RM96–1.

Any person desiring to be heard or to protest said filing should file a motion to intervene or a protest with the Federal Energy Regulatory Commission, 888 First Street NE, Washington, DC 20426, in accordance with Sections 385.214 or 385.211 of the Commission's Rules and Regulations. All such motions or protests must be filed in accordance with section 154.210 of the Commission's Regulations. Protests will be considered by the Commission in determining the appropriate action to be taken, but will not serve to make protestants parties to the proceedings. Any person wishing to become a party must file a motion to intervene. Copies of this filing are on file with the Commission and are available for pubic inspection in the Public Reference Room. This filing may be viewed on the web at http://www.ferc.fed.us/online/rims.htm (call 202–208–2222 for assistance).

David P. Boergers,

Secretary.

[FR Doc. 00–12718 Filed 5–19–00; 8:45 am]

BILLING CODE 6717–01–M

DEPARTMENT OF ENERGY

Federal Energy Regulatory Commission

[Docket No. EL00–76–000]

French Broad Electric Membership Corporation v. Carolina Power & Light Company; Notice of Complaint

May 16, 2000.

Take notice that on May 12, 2000, French Broad Electric Membership Corporation (FBEMC) filed a complaint against Carolina Power & Light Company (CP&L) alleging that CP&L's rate for capacity charged to FBEMC for requirements service under a bundled Power Supply Agreement is unjust and unreasonable. FBEMC requests that the Commission establish hearing procedures to determine the just and reasonable rate to be effective 60 days after the filing of the complaint, direct CP&L to refund excessive amounts previously collected from FBEMC, and establish a refund effective date of 60 days after the filing of the complaint.

Any person desiring to be heard or to protest this filing should file a motion to intervene or protest with the Federal Energy Regulatory Commission, 888 First Street, NE., Washington, DC 20426, in accordance with Rules 211 and 214 of the Commission's Rules of Practice and Procedure (18 CFR 385.211 and 385.214). All such motions or protests must be filed on or before June 1, 2000. Protests will be considered by the Commission in determining the appropriate action to be taken, but will not serve to make protestants parties to the proceeding. Any person wishing to become a party must file a motion to intervene. Copies of this filing are on file with the Commission and are available for public inspection in the Public Reference Room. This filing may also be viewed on the Internet at http://www.ferc.fed.us/online/rims.htm (call 202–208–2222) for assistance. Answers

to the complaint shall also be due on or before June 1, 2000.

David P. Boergers,

Secretary.

[FR Doc. 00–12726 Filed 5–19–00; 8:45 am]

BILLING CODE 6717–01–M

DEPARTMENT OF ENERGY

Federal Energy Regulatory Commission

[Docket No. RP00–279–000]

High Island Offshore System, L.L.C.; Notice of Tariff Filing

May 16, 2000.

Take notice that on May 10, 2000, High Island Offshore System, L.L.C. (HIOS), tendered for filing as part of its FERC Gas Tariff, Third Revised Volume No. 1, the revised tariff sheets listed in Appendix A to the filing. HIOS proposes that the foregoing tariff sheets be made effective on June 1, 2000.

HIOS states this filing is made to reflect ministerial tariff changes resulting from the assumption of operating duties by the El Paso Energy Partners Operating Company (EPNOC). HIOS further states that the instant filing specifically modifies the company's address, telephone numbers and personnel titles and designations from its currently effective tariff to conform with the changes due to the assumption of operating duties by EPNOC. HIOS further states that the changes effected by this filing are purely ministerial.

Any person desiring to be heard or to protest said filing should file a motion to intervene or a protest with the Federal Energy Regulatory Commission, 888 First Street N.E., Washington, D.C. 20426, in accordance with Sections 385.214 or 385.211 of the Commission's Rules and Regulations. All such motions or protests must be filed in accordance with Section 154.210 of the Commission's Regulations. Protests will be considered by the Commission in determining the appropriate action to be taken, but will not serve to make protestants parties to the proceedings. Any person wishing to become a party must file a motion to intervene. Copies of this filing are on file with the Commission and are available for public inspection in the Public Reference Room. This filing may be viewed on the web at http://www.ferc.fed.us.online/rims.htm (call 202–208–2222 for assistance).

David P. Boergers,

Secretary.

[FR Doc. 00–12720 Filed 5–19–00; 8:45 am]

BILLING CODE 6717–01–M

DEPARTMENT OF ENERGY

Federal Energy Regulatory Commission

[Docket No. RP00–276–000]

Kinder Morgan Interstate Gas Transmission LLC; Notice of Tariff Filing

May 16, 2000.

Take notice that on May 10, 2000, Kinder Morgan Interstate Gas Transmission LLC (KMIGT) tendered for filing to become part of its FERC Gas Tariff, the following revised tariff sheets, to be effective June 1, 2000:

Fourth Revised Volume No. 1–B

First Revised Sheet No. 89A
First Revised Sheet No. 90
Original Sheet No. 90A
First Revised Sheet No. 91
First Revised Sheet No. 92

Second Revised Volume No. 1–D

First Revised Sheet No. 71A
First Revised Sheet No. 72
Original Sheet No. 72A
First Revised Sheet No. 73
First Revised Sheet No. 74

KMIGT states that the purpose of this filing is to make the changes in KMIGT's Tariff related to Internet communication. KMIGT has also updated related tariff references regarding electronic communications.

Any person desiring to be heard or to protest said filing should file a motion to intervene or a protest with the Federal Energy Regulatory Commission, 888 First Street NE, Washington, DC 20426, in accordance with Sections 385.214 or 385.211 of the Commission's Rules and Regulations. All such motions or protests must be filed in accordance with section 154.210 of the Commission's Regulations. Protests will be considered by the Commission in determining the appropriate action to be taken, but will not serve to make protestants parties to the proceedings. Any person wishing to become a party must file a motion to intervene. Copies of this filing are on file with the Commission and are available for public inspection in the Public Reference Room. This filing may be viewed on the web at http://www.ferc.fed.us/online/rims.htm (call 202–208–2222 for assistance).

David P. Boergers,

Secretary.

[FR Doc. 00–12717 Filed 5–19–00; 8:45 am]

BILLING CODE 6717–01–M

DEPARTMENT OF ENERGY

Federal Energy Regulatory Commission

[Docket No. RP00–278–00]

Natural Gas Pipeline Company of America; Notice of Tariff Filing

May 16, 2000.

Take notice that on May 10, 2000, Natural Gas Pipeline Company of America (Natural) tendered for filing to be a part of its FERC Gas Tariff, Sixth Revised Volume No. 1, the tariff sheets listed on Appendix A to the filing, to be effective June 1, 2000.

Natural states that these tariff sheets are being filed in compliance with the Commission's Order No. 587–G issued April 16, 1998 in Docket No. RM96–1–008, which order relates to interstate pipelines' business transactions using Internet communication as well as to various issue relating to the standardization of these business communications using the Internet.

Natural requested any waivers which may be required for the tendered tariff sheets to become effective June 1, 2000, consistent with Order Nos. 587–G and 587–I.

Natural states that copies of the filing have been mailed to its customers, interested state commissions and all parties set out on the Commission's official service list in Docket No. RM96–1.

Any person desiring to be heard or to protest said filing should file a motion to intervene or a protest with the Federal Energy Regulatory Commission, 888 First Street, N.E., Washington, D.C. 20426, in accordance with Sections 385.214 or 385.211 of the Commission's Rules and Regulations. All such motions or protests must be filed in accordance with Section 154.210 of the Commission's Regulations. Protests will be considered by the Commission in determining the appropriate action to be taken, but will not serve to make protestants parties to the proceedings. Any person wishing to become a party must file a motion to intervene. Copies of this filing are on file with the Commission and are available for public inspection in the Public Reference Room. This filing may be viewed on the web at http://www.ferc.fed.us/online/

rims.htm (call 202–208–2222 for assistance).

David P. Boergers,

Secretary.

[FR Doc. 00–12719 Filed 5–19–00; 8:45 am]

BILLING CODE 6717–01–M

DEPARTMENT OF ENERGY

Federal Energy Regulatory Commission

[Docket No. ER00–2425–000]

New England Power Pool; Notice of Filing

May 16, 2000.

Take notice that on May 5, 2000, the New England Power Pool (NEPOOL) Participants Committee submitted the Fifty-Third Agreement Amending the New England Power Pool Agreement (Fifty-Fourth Agreement) which addresses affiliation and representation issues raised by end user applications for membership in NEPOOL.

A July 1, 2000 effective data has been requested.

The NEPOOL Participants Committee states that copies of these materials were sent to the New England state governors and regulatory commissions and the NEPOOL Participants.

Any person desiring to be heard or to protest such filing should file a motion to intervene or protest with the Federal Energy Regulatory Commission, 888 First Street NE, Washington, DC 20426, in accordance with Rules 211 and 214 of the Commission's Rules of Practice and Procedure (18 CFR 385.211 and 385.214). All such motions and protests should be filed on or before May 26, 2000. Protests will be considered by the Commission to determine the appropriate action to be taken, but will not serve to make protestants parties to the proceedings. Any person wishing to become a party must file a motion to intervene. Copies of this filing are on file with the Commission and are available and are available for public inspection. This filing may also be viewed on the Internet at http://www.ferc.fed.us/online/rims.htm (call 202–208–2222 for assistance).

Linwood A. Watson, Jr.,

Acting Secretary.

[FR Doc. 00–12714 Filed 5–19–00; 8:45 am]

BILLING CODE 6717–01–M

DEPARTMENT OF ENERGY

Federal Energy Regulatory Commission

[Docket No. RP00–283–000]

Questar Pipeline Company; Notice of Tariff Filing

May 16, 2000.

Take notice that on May 12, 2000, Questar Pipeline Company (Questar) tendered for filing as part of its FERC Gas Tariff, Third Revised Sheet No. 117, First Revised Volume No. 1, to be effective June 12, 2000.

Questar pursuant to prior Commission authority, provides underground natural-gas storage service at three aquifer storage reservoirs, Leroy, Coalville and Chalk Creek. Questar's currently effective tariff requires that working gas from these reservoirs be withdrawn to the extent practicable at the conclusion of the withdrawal period, beginning no later than March 1 of each year, and allows reinjection late in the fall.

Questar's only storage customer utilizing the aquifer reservoirs, Questar Gas Company (QGC), requested that it be allowed, but not required to, leave working gas in both the Leroy and Coalville storage aquifers during the summer months. Upon Questar's and QGC's joint engineering analysis, the parties ascertained that leaving approximately 50 percent of the working gas in place at two of its storage reservoirs, Leroy and Coalville and allowing QGC to inject and withdraw working gas between the end of the withdrawal period and beginning of the injection period, may be beneficial for QGC. Injecting and withdrawing natural gas in and out of these two reservoirs year round, improves reservoir performance and provides QGC with more accommodation and flexible storage service. Questar Pipeline has determined that making the change requested by QGC will not adversely affect the storage reservoirs' operations. Further, since QGC is the only customer using these storage reservoirs, this change will not affect other customers. Therefore, in response to QGC's request, Questar proposed modifications to its tariff that it believes will allow for more efficient and productive usage of the Leroy and Coalville storage reservoirs.

Questar states that a copy of this filing has been served upon Questar's customers, the Public Service Commission of Utah and the Public Service Commission of Wyoming.

Any person desiring to be heard or to protest said filing should file a motion to intervene or a protest with the Federal Energy Regulatory Commission, 888 First Street, N.E., Washington, D.C. 20426, in accordance with Sections 385.214 or 385.211 of the Commission's Rules and Regulations. All such motions or protests must be filed in accordance with Section 154.210 of the Commission's Regulations. Protests will be considered by the Commission in determining the appropriate action to be taken, but will not serve to make protestants parties to the proceedings. Any person wishing to become a party must file a motion to intervene. Copies of this filing are on file with the Commission and are available for public inspection in the Public Reference Room. This filing may be viewed on the web at http://www.ferc.fed.us/online/rims.htm (call 202–208–2222 for assistance).

David P. Boergers,

Secretary.

[FR Doc. 00–12724 Filed 5–19–00; 8:45 am]

BILLING CODE 6717–01–M

DEPARTMENT OF ENERGY

Federal Energy Regulatory Commission

[Project No. 516]

South Carolina Electric and Gas Co.; Notice of Public Information Meetings on the Saluda Project No. 516

May 16, 2000.

South Carolina Electric & Gas Company's Saluda Project's license expires in August 2007. The hydropower project and its reservoir, Lake Murray, are located in Saluda, Lexington, Newberry and Richland Counties, South Carolina. The Federal Energy Regulatory Commission (Commission) will hold two public information meetings to familiarize the public with the Commission's hydropower licensing program. Commission staff will give an overview of the Commission and its licensing procedures. There will be an opportunity for questions and answers.

Interested persons are invited to attend either or both meetings scheduled as follows:

Tuesday, June 20, 2000

2 to 4 p.m. (afternoon session)

6:30 to 8:30 p.m. (evening session)

Auditorium, Irmo Elementary School, 7401 Gibbes Street, Irmo, SC 29063; (803) 732–8278.

Please direct any questions regarding these meetings to either Jack Hannula, Commission Licensing Team Leader, 888 First Street NE, Washington, DC

20426; (202) 219–0116; or Charlie Compton, Lexington County Planning and Development, (803) 359–8121.

David P. Boergers,

Secretary.

[FR Doc. 00–12715 Filed 5–19–00; 8:45 am]

BILLING CODE 6717–01–M

DEPARTMENT OF ENERGY

Federal Energy Regulatory Commission

[Docket No. RP00–284–000]

Southern Natural Gas Company; Notice of Proposed Changes to FERC Gas Tariff

May 16, 2000.

Take notice that on May 12, 2000, Southern Natural Gas Company (Southern) tendered for filing as part of its FERC Gas Tariff, Seventh Revised Volume No. 1, the following tariff sheets to become effective July 1, 2000:

Third Revised Sheet No. 114
Third Revised Sheet No. 115

Southern states that the purpose of this filing is to revise Section 6.2 of the General Terms and Conditions to its tariff by expanding the rights of delivery point operators to consolidate multiple measurement stations into one delivery point.

Southern states that copies of the filing will be served upon its shippers and interested state commissions.

Any person desiring to be heard or to protest said filing should file a motion to intervene or a protest with the Federal Energy Regulatory Commission, 888 First Street, N.E., Washington, D.C. 20426, in accordance with Sections 385.214 or 385.211 of the Commission's Rules and Regulations. All such motions or protests must be filed in accordance with Section 154.210 of the Commission's Regulations. Protests will be considered by the Commission in determining the appropriate action to be taken, but will not serve to make protestants parties to the proceedings. Any person wishing to become a party must file a motion to intervene. Copies of this filing are on file with the Commission and are available for public inspection in the Public Reference Room. This filing may be viewed on the web at http://www.ferc.fed.us/online/rims.htm (call 202–208–2222 for assistance).

David P. Boergers,

Secretary.

[FR Doc. 00–12725 Filed 5–19–00; 8:45 am]

BILLING CODE 6717–01–M

DEPARTMENT OF ENERGY

Federal Energy Regulatory Commission

[Docket No. RP00–281–000]

Trailblazer Pipeline Company; Notice of Tariff Filing

May 16, 2000.

Take notice that on May 11, 2000, Trailblazer, Pipeline Company (Trailblazer) tendered for filing to be a part of its FERC Gas Tariff, Sixth Revised Volume No. 1, the tariff sheets listed on Appendix A to the filing, to be effective June 1, 2000.

Trailblazer states that these tariff sheets are being filed in compliance with the Commission's Order No. 587–G issued April 16, 1998 in Docket No. RM96–1–008, which order relates to interstate pipelines' business transactions using Internet communication as well as to various issues relating to the standardization of these business communications using the Internet.

Trailblazer requested any waivers which may be required for the tendered tariff sheets to become effective June 1, 2000, consistent with Order Nos. 587–G and 587–I.

Trailblazer states that copies of the filing have been mailed to its customers, interested state commissions and all parties set out on the Commission's official service list in Docket No. RM96–1.

Any person desiring to be heard or to protest said filing should file a motion to intervene or a protest with the Federal Energy Regulatory Commission, 888 First Street, N.E., Washington, D.C. 20426, in accordance with Sections 385.214 or 385.211 of the Commission's Rules and Regulations. All such motions or protests must be filed in accordance with Section 154.210 of the Commission's Regulations. Protests will be considered by the Commission in determining the appropriate action to be taken, but will not serve to make protestants parties to the proceedings. Any person wishing to become a party must file a motion to intervene. Copies of this filing are on file with the Commission and are available for public inspection in the Public Reference Room. This filing may be viewed on the web at http://www.ferc.fed.us/online/rims.htm (call 202–208–2222 for assistance).

David P. Boergers,

Secretary.

[FR Doc. 00–12722 Filed 5–19–00; 8:45 am]

BILLING CODE 6717–01–M

DEPARTMENT OF ENERGY

Federal Energy Regulatory Commission

[Docket No. RP00–280–000]

U–T Offshore System, L.L.C.; Notice of Tariff Filing

May 16, 2000.

Take notice that on May 10, 2000, U–T Offshore System, L.L.C. (UTOS), tendered for filing as part of its FERC Gas Tariff, Fourth Revised Volume No. 1, the revised tariff sheets listed in Appendix A to the filing. UTOS proposes that the foregoing tariff sheets be made effective on June 1, 2000.

UTOS states this filing is made to reflect ministerial tariff changes resulting from the assumption of operating duties by the El Paso Energy Partners Operating Company (EPNOC). UTOS further states that the instant filing specifically modifies the company's address, telephone numbers and personnel titles and designations from its currently effective tariff to conform with the changes due to the assumption of operating duties by EPNOC. UTOS further states that the changes effected by this filing are purely ministerial.

Any person desiring to be heard or to protest said filing should file a motion to intervene or a protest with the Federal Energy Regulatory Commission, 888 First Street, N.E., Washington, D.C. 20426, in accordance with Sections 385.214 or 385.211 of the Commission's Rules and Regulations. All such motions or protests must be filed in accordance with Section 154.210 of the Commission's Regulations. Protests will be considered by the Commission in determining the appropriate action to be taken, but will not serve to make protestants parties to the proceedings. Any person wishing to become a party must file a motion to intervene. Copies of this filing are on file with the Commission and are available for public inspection in the Public Reference Room. This filing may be viewed on the web at http://www.ferc.fed.us/online/rims.htm (call 202–208–2222 for assistance).

David P. Boergers,

Secretary.

[FR Doc. 00–12721 Filed 5–19–00; 8:45 am]

BILLING CODE 6717–01–M

DEPARTMENT OF ENERGY

Federal Energy Regulatory Commission

[Docket No. RP00–282–000]

Williston Basin Interstate Pipeline Company; Notice of Tariff Filing

May 16, 2000.

Take notice that on May 11, 2000, Williston Basin Interstate Pipeline Company (Williston Basin), tendered for filing as part of its FERC Gas Tariff, Second Revised Volume No. 1, the following tariff sheets listed to become effective June 1, 2000:

Second Revised Sheet No. 260
Fifth Revised Sheet No. 261
First Revised Sheet No. 261A
Second Revised Sheet No. 262
First Revised Sheet No. 290
Second Revised Sheet No. 291
Second Revised Sheet No. 291A
Third Revised Sheet No. 292
Third Revised Sheet No. 293

Williston Basin states that the revised tariff sheets are being filed in compliance with the requirements of Commission Order No. 637 issued February 9, 2000 in Docket Nos. RM98–10–000 and RM98–12–000. Specifically, the changes proposed reflect revisions to applicable sections of Williston Basin's FERC Gas Tariff to remove the price cap for short-term capacity releases and to revise the applicability of right of first refusal to incorporate the requirements of the Commission's Order.

Any person desiring to be heard or to protest said filing should file a motion to intervene or a protest with the Federal Energy Regulatory Commission, 888 First Street, NE, Washington, DC 20426, in accordance with Sections 385.214 or 385.211 of the Commission's Rules and Regulations. All such motions or protests must be filed in accordance with Section 154.210 of the Commission's Regulations. protests will be considered by the Commission in determining the appropriate action to be taken, but will not serve to make protestants parties to the proceedings. Any person wishing to become a party must file a motion to intervene. Copies of this filing are on file with the Commission and are available for public inspection in the Public Reference Room. This filing may be viewed on the web at http://www.ferc. fed.us/online/rims.htm (call 202–208–2222 for assistance).

David P. Boergers,

Secretary.

[FR Doc. 00–12723 Filed 5–19–00; 8:45 am]

BILLING CODE 6717–01–M

DEPARTMENT OF ENERGY

Federal Energy Regulatory Commission

Notice of Revised Exhibit G Drawings, and Soliciting Comments, Motions to Intervene, and Protests

May 16, 2000.

a. *Application Type:* Revised Exhibit G Drawings for Nisqually Project.

b. *Project No:* 1862–038 and 1862–059.

c. *Dates Filed:* December 30, 1997; supplemented December 27, 1999 and May 5, 2000.

d. *Applicant:* Tacoma Power.

e. *Name of Project:* Nisqually Project.

f. *Location:* The Nisqually Project is on the Nisqually River in Pierce, Thurston, and Lew Counties, Washington. The project is partially located on lands of the Mount Baker-Snoqualmie National Forest.

g. *Filed Pursuant to:* Federal Power Act, 16 U.S.C. 791(a)–825(r)

h. *Applicant Contact:* Mr. Terry Ryan, Tacoma Power, 3628 South 35th Street, Tacoma, Washington 98409–3192; (253) 502–8793.

i. *FERC Contact:* Any questions on this notice should be addressed to Allyson Lichtenfels at (202) 219–3274 or by e-mail at allyson.lictenfels@ferc.fed.us.

j. *Deadline for Filing Comments and/or Motions:* June 22, 2000. Please include the project number (1862–038 and 1862–059) on any comments or motions filed.

k. *Description of Filing:* Tacoma Power filed revised exhibit G drawings on December 30, 1997, based on updated deed research of sales and trades of property and aerial surveys. Exhibit G, sheet 2 of 9, includes lands owned by the licensee added to the project boundary between La Grande spillway and powerhouse, near Township 16N, R3E and R4E. It also reflects the removal of a small parcel of land from the project boundary. Exhibit G drawings, sheets 5 and 6, reflect a reduction in the acreage of federal lands from 38 to 22 acres, to be consistent with proposed land exchanges between the United States Forest Service and the licensee.

l. *Locations of the Application:* A copy of the application is available for inspection any reproduction at the Commission's Public Reference Room, located at 888 First Street NE., Room 2A, Washington, DC 20426, or by calling (202) 208–1371. This filing may be viewed on http://www.ferc.fed.us/online/rims.htm [call (202) 208–2222 for assistance]. A copy is also available for inspection and reproduction at the address in item h above.

m. Individuals desiring to be included on the Commission's mailing list should be indicate by writing to the Secretary of the Commission.

Comments, Protests, or Motions to Intervene—Anyone may submit comments, a protest, or a motion to intervene in accordance with the requirements of Rules of Practice and Procedure, 18 CFR 385.210, .211, .214. In determining the appropriate action to take, the Commission will consider all protests or other comments filed, but only those who file a motion to intervene in accordance with the Commission's Rules may become a party to the proceeding. Any comments, protests, or motions to intervene must be received on or before the specified comment date for the particular application.

Filing and Service of Responsive Documents—Any filings must bear in all capital letters the title ''COMMENTS'' ''RECOMMENDATIONS FOR TERMS AND CONDITIONS'', ''PROTEST'', or ''MOTION TO INTERVENE'', as applicable, and the Project Number of the particular application to which the filing refers. Any of the above-named documents must be filed by providing the original and the number of copies provided by the Commission's regulation to: The Secretary, Federal Energy Regulatory Commission, 888 First Street, NE, Washington, DC 20426. A copy of any motion to intervene must also be served upon each representative of the Applicant specified in the particular application.

Agency Comments—Federal, state, and local agencies are invited to file comments on the described application. A copy of the application may be obtained by agencies directly from the Applicant. If any agency does not file comments within the time specified for filing comments, it will be presumed to have no comments. One copy of an agency's comments must also be sent to the Applicant's representatives.

David P. Boergers,

Secretary.

[FR Doc. 00–12716 Filed 5–19–00; 8:45 am]

BILLING CODE 6717–01–M

DEPARTMENT OF ENERGY

Federal Energy Regulatory Commission

Notice of Intent To File an Application for a New License

May 16, 2000.

a. *Type of Filing:* Notice of Intent to File An Application for a New License.

b. *Project No.:* 2586.

c. *Date Filed:* April 24, 2000.

d. *Submitted By:* Alabama Electric Cooperative, Inc.—current licensee.

e. *Name of Project:* Conecuh River Hydroelectric Project.

f. *Location:* On the Conecuh River near the towns of Gantt and River Falls, in Covington County, Alabama.

g. *Filed Pursuant to:* Section 15 of the Federal Power Act.

h. *Licensee Contact:* Mike Noel, Alabama Electric Cooperative, Inc., 2027 East Three Notch Street, Andalusia, AL 36420 (334) 427–3248.

i. *FERC Contact:* Ron McKitrick, ronald.mckitrick@ferc.fed.us, (770 452–3778.

j. *Effective date of current license:* May 1, 1965.

k. *Expiration date of current license:* April 30, 2005.

l. *Description of the Project:* The project consists of the following two developments:

The Point ''A'' Development consists of the following existing facilities: (1) A 2,800-foot-long earthen dam comprised of a gated concrete spillway section; (2) a 700-acre reservoir at a normal water surface elevation of 170 feet msl; (3) a powerhouse, integral with the dam, containing three generating units with a total installed capacity of 5,200 kW, (4) a 0.39-mile-long, 46-kV transmission line; and (5) other appurtenances.

The Gantt Development consists of the following existing facilities: (1) A 1,562-foot-long earthen dam comprised of a gated concrete spillway section; (2) a 2,767-acre reservoir at a normal water surface elevation of 198 feet msl; (3) a powerhouse, integral with the dam, containing two generating units with a total installed capacity of 3,050 kW, and (4) other appurtenances.

m. Each application for a new license and any competing license applications must be filed with the Commission at least 24 months prior to the expiration of the existing license. All applications for license for this project must be filed by April 30, 2003.

David P. Boergers,

Secretary.

[FR Doc. 00–12727 Filed 5–19–00; 8:45 am]

BILLING CODE 6717–01–M

DEPARTMENT OF ENERGY

Federal Energy Regulatory Commission

Sunshine Act Meeting

AGENCY HOLDING MEETING: Federal Energy Regulatory Commission.

FEDERAL REGISTER CITATION OF PREVIOUS ANNOUNCEMENT: May 15, 2000, 65 FR 30985.

PREVIOUSLY ANNOUNCED TIME AND DATE OF MEETING: May 17, 2000, 10 a.m.

CHANGE IN THE MEETING: The following Docket No. and Company has been added as Item CAE–34 on the Agenda scheduled for May 17, 2000 meeting.

Item No.

CAE–34

Docket No. and Company

EL00–75–000, Notice of Interim Procedures to Support Industry Reliability Efforts and Requests for Commission

David P. Boergers,

Secretary.

[FR Doc. 00–12909 Filed 5–18–00; 11:49 am]

BILLING CODE 6717–01–M

ENVIRONMENTAL PROTECTION AGENCY

[FRL–6703–7]

SES Performance Review Board; Membership

AGENCY: Environmental Protection Agency (EPA).

ACTION: Notice.

SUMMARY: Notice is hereby given of the membership of the EPA Performance Review Board.

DATES: May 22, 2000.

FOR FURTHER INFORMATION CONTACT: Karen Stinson, Executive Resources and Special Programs, 3650, Office of Human Resources and Organizational Services, Office of Administration and Resources Management, Environmental Protection Agency, 1200 Pennsylvania Avenue, N.W., Washington, DC 20460 (202) 260–1373.

SUPPLEMENTARY INFORMATION: Section 4314 (c) (1) through (5) of Title 5, U.S.C., requires each agency to establish in accordance with regulations prescribed by the Office of Personnel Management, one or more SES performance review boards. This board shall review and evaluate the initial appraisal of a senior executive's performance by the supervisor, along with any recommendations to the appointment authority relative to the performance of the senior executive.

Members of the EPA Performance Review Board are:

Lynda F. Carroll (Chair), Assistant Regional Administrator, Region 6

Joseph L. Dillon, Acting Comptroller, Office of the Chief Financial Officer

Joan Fidler, Director, Office of Management Operations, Office of International Activities

Ann E. Goode (Ex-Officio), Director, Office of Civil Rights, Office of the Administrator

Geoffrey H. Grubbs, Director, Office of Science and Technology, Office of Water

Clarence Hardy, Director, Office of Cooperative Environmental Management, Office of the Administrator

Walter W. Kovalick, Jr., Director, Technology Innovation Office, Office of Solid Waste and Emergency Response

Richard L. Lemley, Director, Facilities and Support Division, Office of Administration and Resources Management

Henry L. Longest II, Deputy Assistant Administrator for Management, Office of Research and Development

Hugh W. McKinnon (Outgoing Chair), Associate Director for Health (NRMRL), Office of Research and Development

Brian J. McLean, Director, Clean Air Markets, Office of Air and Radiation

Linda M. Murphy, Director, Office of Ecosystem Protection, Region 1

James O. Rauch, Assistant Inspector General for Audits, Office of the Inspector General

Eric V. Schaeffer, Director, Office of Regulatory Enforcement, Office of Enforcement and Compliance Assurance

Keith A. Takata, Director, Superfund Division, Region 9

Linda A. Travers, Deputy Director, Office of Technology Operations and Planning, Office of Environmental Information

Marylouise M. Uhlig, Director, Office of Program Management Operations, Office of Prevention, Pesticides and Toxic Substances

Russell L. Wright, Director, Science and Ecosystem Support Division, Region 4

Daiva Balkus (Acting Executive Secretary) Acting Director, Office of Human Resources and Organizational Services, Office of Administration and Resources Management

Members of the Inspector General Subcommittee to the EPA Performance Review Board are:

Raymond J. DeCarli, Assistant Inspector General for Audits, Department of Transportation

James E. Henderson, Assistant Inspector General for Investigations, General Services Administration

Richard L. Skinner, Deputy Inspector General, Federal Emergency Management Agency

Dated: May 11, 2000.

David J. O'Connor,

Acting Assistant Administrator for Administration and Resources, Management.

[FR Doc. 00–12791 Filed 5–19–00; 8:45 am]

BILLING CODE 6560–50–P

ENVIRONMENTAL PROTECTION AGENCY

[FRL –6704–9]

Science Advisory Board; Emergency Notification of Public Advisory Committee Meeting

Pursuant to the Federal Advisory Committee Act, Public Law 92–463, notice is hereby given that a subcommittee of the US EPA Science Advisory Board (SAB) will hold a public meeting on the date and time noted. All times noted are Eastern Standard Time. SAB meetings are open to the public, however, seating is limited and available on a first come basis. *Important Notice:* Documents that are the subject of SAB reviews are normally available from the originating EPA office and are not available from the SAB Office—information concerning availability of documents from the relevant Program Office is included below.

Environmental Engineering Committee (EEC) Teleconference Meeting—June 5, 2000

The Subcommittee on the Diffusion and Adoption of Innovations in Environmental Protection of the Science Advisory Board's (SAB) Environmental Engineering Committee (EEC) will conduct a public teleconference meeting on June 5, 2000 between the hours of 1 and 3 (Eastern Standard Time). The meeting will be coordinated through a conference call connection in room 6013 in the USEPA, Ariel Rios Building North, 1200 Pennsylvania Avenue, NW, Washington, D.C. 20004. The public is encouraged to attend the meeting in the conference room noted above, however, the public may also attend through a telephonic link if lines are available. Additional instructions about how to participate in the conference call can be obtained by calling Ms. Diana Pozun one week prior to the meeting (May 28, 2000) at (202) 564–4544, or via e-mail at *pozun.diana@epa.gov.*

Purpose of the Meeting—Purpose of the Public Teleconference. The purpose of the public teleconference is to clarify the charge questions for a public workshop being planned for June 28, 2000 and to identify any additional background materials that panel members may need to provide advice to the Agency.

The workshop will be a consultative Workshop on the Diffusion and Adoption of Innovations in Environmental Protection. The purpose of the workshop is to identify how the use of data, theories, and research methods derived from the study of the social process of diffusion and adoption of innovations may improve the adoption of innovative approaches to environmental protection: (a) Within EPA; (b) by state, tribal, and local government partners; and (c) by corporate and non-governmental organization partners in environmental protection. EPA program offices will consider the advice of the workshop panel members in developing strategies to encourage adoption of new strategies for environmental protection especially in the areas of watershed protection, pollution prevention and EPA's Multimedia Strategy for Priority Persistent, Bioaccumulative, and Toxic (PBT) Pollutants, and use of social science tools and cultural profiling.

Charge to the Workshop—The panelists will consider the following charge questions:

(a) What are the different principal process models available for understanding the diffusion process and are some of them more appropriate to the EPA program areas under discussion than others?

(1) What is the role of information and information flow in diffusion and adoption of innovations? How critical are they and how can EPA learn to make them more effective?

(2) What have we learned about designing appropriate incentives for facilitating the adoption process?

(3) How important are social networks to the process of diffusion and adoption of innovation? How can EPA recognize and use them?

(4) What can EPA learn from diffusion efforts undertaken by other partners in environmental protection (state and local agencies, tribes, non-governmental organizations, and corporations)?

(b) What are the principal barriers to diffusion and adoption of innovations in selected EPA program areas? Are there some characteristics intrinsic to certain innovations that make them difficult to diffuse?

(c) How can EPA effectively measure the success of its efforts to encourage diffusion and adoption of innovations?

Availability of Review Materials: The following documents related to EPA's watershed approach can be found on the Internet or contact Louise Wise, telephone 202–260–9108; or via email at *wise.louise@epa.gov.*

(a) U.S. EPA. 1996. Watershed Approach Framework, (EPA840–S–96–001), Office of Water (4501F), U.S. EPA, Washington, DC, on the Internet at *http://www.epa.gov/OWOW/watershed/framework.html.*

(b) U. S. EPA. 1997. Statewide Watershed Management Facilitation, (EPA841–R–97–011), Office of Water (4503F), U.S. EPA, Washington, DC., on the Internet at *http://www.epa.gov/OWOW/watershed/wacademy/its08/.*

(c) U. S. EPA. 1997. Top 10 Watershed Lessons Learned, (EPA840–F–97–001), Office of Water (4501F), U.S. EPA, Washington, DC., on the Internet at *http://www.epa.gov/OWOW/lessons/.*

(d) Office of Wetlands, Oceans, & Watersheds, Features, on the Internet at *http://www.epa.gov/OWOW/highlight.html.*

The following documents related to EPA's Multimedia Strategy for Priority Persistent, Bioaccumulative, and Toxic (PBT) Pollutants are available from Thomas Murray, telephone (202)260–1876; or via email at *murray.thomas@epa.gov:*

(a) Issue Statement.

(b) Persistent, Bioaccumulative, and Toxic Chemicals Initiative, description on the Internet at *http://www.epa.gov/pbt.*

The following documents related to Social Science Tools: Cultural Profiling are available via mail or email from Theresa Trainor, telephone (202) 260–3009; or via e-mail at *trainor.theresa@epa.gov:*

(a) The Social Sciences and Environmental Protection: Experiences and Opportunities at the U.S. EPA (Mark Wamsley, July 1999).

(b) Community Cultural Profiling Guide: Understanding a Community's Sense of Place Fact Sheet.

(c) Community Profile of Nebraska's Central Platte River Region, A joint project between The Nature Conservancy and the United States Environmental Protection Agency, November 1, 1999.

For Further Information—Any member of the public wishing further information concerning this meeting or wishing to submit brief oral comments must contact Dr. Angela Nugent, Designated Federal Officer, Science Advisory Board (1400A), U.S. Environmental Protection Agency, 1200

Pennsylvania Avenue, NW, Washington, DC 20460; telephone (202) 564–4562; FAX (202) 501–0582; or via e-mail at nugent.angela@epa.gov. Requests for oral comments must be in writing (e-mail, fax or mail) and received by Dr. Nugent no later than noon Eastern Time on May 28, 2000.

Providing Oral or Written Comments at SAB Meetings

It is the policy of the Science Advisory Board to accept written public comments of any length, and to accommodate oral public comments whenever possible. The Science Advisory Board expects that public statements presented at its meetings will not be repetitive of previously submitted oral or written statements. Oral Comments: In general, each individual or group requesting an oral presentation at a face-to-face meeting will be limited to a total time of ten minutes. For teleconference meetings, opportunities for oral comment will usually be limited to no more than three minutes per speaker and no more than fifteen minutes total. Deadlines for getting on the public speaker list for a meeting are given above. Speakers should bring at least 35 copies of their comments and presentation slides for distribution to the reviewers and public at the meeting. *Written Comments:* Although the SAB accepts written comments until the date of the meeting (unless otherwise stated), written comments should be received in the SAB Staff Office at least one week prior to the meeting date so that the comments may be made available to the committee for their consideration. Comments should be supplied to the appropriate DFO at the address/contact information noted above in the following formats: one hard copy with original signature, and one electronic copy via e-mail (acceptable file format: WordPerfect, Word, or Rich Text files (in IBM–PC/Windows 95/98 format). Those providing written comments and who attend the meeting are also asked to bring 35 copies of their comments for public distribution.

General Information—Additional information concerning the Science Advisory Board, its structure, function, and composition, may be found on the SAB Website (*http://www.epa.gov/sab*) and in The FY1999 Annual Report of the Staff Director which is available from the SAB Publications Staff at (202) 564–4533 or via fax at (202) 501–0256. Committee rosters, draft Agendas and meeting calendars are also located on our website.

Meeting Access—Individuals requiring special accommodation at this meeting, including wheelchair access to the conference room, should contact the DFO at least five business days prior to the meeting so that appropriate arrangements can be made.

Dated: May 17, 2000.

Donald G. Barnes,

Staff Director, Science Advisory Board.

[FR Doc. 00–12914 Filed 5–19–00; 8:45 am]

BILLING CODE 6560–50–P

ENVIRONMENTAL PROTECTION AGENCY

[FRL–6600–3]

Notice of Proposed Agreement and Covenant Not To Sue Pursuant to the Comprehensive Environmental Response, Compensation, and Liability Act of 1980 (CERCLA), As Amended, 42 U.S.C. 101, Nahant Marsh Site, Davenport, IA

AGENCY: Environmental Protection Agency.

ACTION: Notice of Proposed Agreement and Covenant Not to Sue, Nahant Marsh Site, Davenport, Iowa.

SUMMARY: Notice is hereby given that a proposed agreement and covenant not to sue regarding property which the City of Davenport, Iowa intends to purchase at the Nahant Marsh Superfund Site, was signed by the United States Environmental Protection Agency (USEPA) on December 30, 1999, and by the United States Department of Justice on April 13, 2000. The property that is the subject of this agreement is owned by the Scott County Sportsmen's Association and is located at 4740 Wapello Avenue, Davenport, Iowa.

DATES: EPA will receive, on or before June 21, 2000, written comments relating to the proposed agreement and covenant not to sue.

ADDRESSES: Comments should be addressed to E. Jane Kloeckner, Senior Assistant Regional Counsel, United States Environmental Protection Agency, Region VII, 901 N. Fifth Street, Kansas City, Kansas 66101 and should refer to the Nahant Marsh Superfund Site.

The proposed agreement and covenant not to sue (Agreement) may be examined or obtained in person or by mail at the office of the United States Environmental Protection Agency, 901 No. Fifth Street, Kansas City, Kansas 66101, (913) 551–7010. In requesting a copy, please refer to the reference case and enclose a check in the amount of $14.25 (25 cents per page reproduction costs), payable to the United States Environmental Protection Agency.

SUPPLEMENTARY INFORMATION: The Nahant Marsh Site is part of a unique wetland located along the Upper Mississippi River. Soil and sediments at the Nahant Marsh site were contaminated with hazardous substances attributable to historic shooting range operations at the Scott County Sportsmen's Association Trap and Skeet Shooting Club facility. EPA investigations at the Site indicated a severe, acute ecological threat due to the lead shot contamination in the sediments. A threat to recreational users at the Site was also present due to the lead shot in the soil. EPA conducted a removal action at the Site in 1999 to mitigate these threats. The proposed agreement concerns the sale of the Association's facility and land.

EPA entered into a Consent Decree with the Scott County Sportsmen's Association to resolve the Association's liability under CERCLA for their operations which caused the release of hazardous substances at the facility. The Consent Decree settles claims by the United States, against Scott County Sportsmen's Association (SCSA) under Section 107 of the Comprehensive Environmental Response, Compensation, and Liability Act (CERCLA), 42 U.S.C. 9607. The Complaint of the United States seeks past and future CERCLA response costs incurred by EPA connection with the Nahant Marsh Superfund Site (the Site) and for damages for injuries to natural resources at the Site as determined by the Department of the Interior (Interior) and the United States Fish and Wildlife Service, the Natural Resource Trustee.

The Consent Decree requires SCSA to record a conservation easement for its property at the Site in favor of the Iowa Natural Heritage Foundation (INHF) for preservation of the land as a reserve for wildlife and to prevent residential, commercial and industrial development of the land. The SCSA is required to transfer ownership of its property at the Site to the City of Davenport, Iowa (the City), and notify EPA of the transfer. The SCSA has no assets other than the property it owns within the Site. All proceeds from the sale will be paid to the United States. The Consent Decree with SCSA is also subject to public comment pursuant to a separate **Federal Register** notice.

Pursuant to the Agreement with the City of Davenport that is the subject of this **Federal Register** notice, the City has agreed to purchase the property at its appraised value, to take the property subject to the conservation easement, to restrict residential or commercial development, and to use the property for environmental education purposes.

In exchange, the United States grants a covenant not to sue, intended to release the City from liability which otherwise would stem from ownership of the Property. The City agrees to pay the purchase price to EPA ($81,000) and to DOI ($5,000). The purchase price is in accordance with fair market value of the property as determined by an appraiser and appraisal approved by the Department of Justice. Under the terms of the Agreement and Covenant Not to Sue, the City will also place a restrictive covenant on the land that restricts residential development. In exchange, the City will receive a covenant not to sue for response actions and costs relating to the Site pursuant to Section 107(a) of CERCLA. The City will also receive a covenant not to sue for natural resource damages under CERCLA.

Dated: April 24, 2000.

Nathaniel Scurry,

Acting Regional Administrator, United States Environmental Protection Agency, Region VII.

[FR Doc. 00–11564 Filed 5–19–00; 8:45 am]

BILLING CODE 6560–50–M

ENVIRONMENTAL PROTECTION AGENCY

[FRL–6704–3]

New Jersey State Prohibition on Marine Discharges of Vessel Sewage; Notice of Final Affirmative Determination

Notice is hereby given that a final determination has been made by the Regional Administrator, Environmental Protection Agency (EPA), pursuant to section 312(f) of Public Law 92–500, as amended by Public Law 95–217 and Public Law 100–4 (the Clean Water Act), that adequate facilities for the safe and sanitary removal and treatment of sewage from all vessels are reasonably available for the waters of the Shrewsbury River, County of Monmouth, State of New Jersey. A Notice of Receipt of Petition and Tentative Determination was published in the **Federal Register** on April 3, 2000 and public comments regarding the tentative determination were accepted through May 3, 2000.

Comments were received from four individuals, one supporting and three objecting to the establishment of the Shrewsbury River No Discharge Area. These individuals are as follows:

Philip G. Conner, Crockett Brothers Boatyard, P.O. Box 369, Oxford, Maryland 21654

Shoreway Marine, Inc. Highway 73, West Berlin, New Jersey 08091

Kim Shinn, Raritan Engineering, P.O. Box 1157, Millville, New Jersey 08332

Monmouth County Board of Health, P.O. Box 1255, Freehold, New Jersey 07728–1255

One individual stated that his boating experience on the Manasquan River and the Shark River has been that the pumpouts located in the No Discharge Area are accessible but are not readily available. This individual attempted on five different occasions to have his holding tank pumped out and was not successful. He wonders how EPA and the New Jersey Department of Environmental Protection (NJDEP) intend to enforce an additional No Discharge Area if the agencies have not addressed the current problems on the Manasquan River and the Shark River. In response to these comments, EPA acknowledges that pumpout facilities will occasionally be out of service, but this fact does not require a fundamental change to the No Discharge Area program. The commenter did not provide the specifics regarding these attempted pumpouts, such as whether all five attempts were at the same pumpout, the dates that these attempts occurred or the circumstances which prevented him from using the pumpouts. Another commenter stated that the Shark River pumpouts were not available beginning late August 1999. The commenter stated that this forced boaters to discharge their holding tanks into the Shark River. In response, EPA and NJDEP have attempted to get problems corrected when they are brought to our attention. Also, for the Shrewsbury River, the application documents that all of the existing pumpouts are expected to be available for the entire boating season.

Several commenters objected to the vessel population numbers and the calculations used to estimate the number of pumpouts needed based on the vessel population. They feel that the vessel population at private docks is too low and that peak occupancy rates are too low. The commenters also stated that the equations are old, outdated and need to be reevaluated. In response, the vessel population numbers are based on survey done by the local environmental commissions. These surveys were conducted on the water using visual observations to count the boats at private docks. The methods used to estimate the vessel populations are standard procedures established in the 1994 Clean Vessel Act Grant Program and the 1994 EPA guidance document entitled ''Protecting Coastal Waters from Vessel and Marina Discharges'' and have been accepted by EPA as valid numbers. Regarding the equations used to estimate the numbers of pumpouts to service the vessel population in the Shrewsbury, two different methods were used to calculate the number of pumpouts needed, which is between two and four pumpouts. There are five pumpouts currently available and another three facilities have been proposed. Based on the information provided by the commenters, no revision was made to the calculations.

Another comment concerned the lack of dump stations for disposal of waste from portable toilets. In response, EPA notes that the pumpouts which received Clean Vessel Act grant monies came equipped with wand systems. The wands permit the portable toilets to be pumped out in a safe and sanitary manner.

Another commenter asked what a boater returning after 6 p.m., when all the facilities have closed, should do to pump out a holding tank. In response, the boater has three options: they can pump the holding tank prior to the next trip out during business hours; they can pump out at a facility on the Navesink River such as Marine Park which is open 24 hours a day; or they can discharge the holding tank if they are beyond the three mile limit. The same commenter stated that there are many commercial fishing vessels ''in the area'' that operate year round and questioned how such an operator would pump out in the off season. In response, EPA acknowledges that there are some vessels which operate off season ''in the area'', but we note that the commenter has not documented that such vessels are active on the Shrewsbury River. The application provided did not identify any off season commercial vessels which are based in or active on the Shrewsbury River.

Another comment recommended that current laws should be enforced by the State of New Jersey and the New Jersey Marine Police instead of proceeding with this No Discharge Area proposal. In response, EPA is obligated to act on the application submitted, and we are without authority to require the state and local applicants to implement alternate approaches.

Another comment relates to the scheduling of a press event for May 11, 2000 while the comment period was still open. In response, the tentative scheduling of the event in advance of a final determination is required due to the busy schedules of EPA and NJDEP senior managers. In the event that a final determination had not been made or that the final determination was to deny the request, the press event would be

canceled, rescheduled or held to explain the grounds for denial.

Another comment concerned a survey of the boats registered in the State of Maryland indicating that 5.2% of the vessels were equipped with either a Type I or Type II Marine Sanitation Device (MSD). This commenter stated that little if any environmental benefit would be gained by elimination of these flow through discharges. In response, EPA contends that elimination of any source of pollutants results in an environmental benefit. This individual also stated that it is a well known fact that the existing, national prohibition on the discharge of untreated vessel sewage waste is not enforced. In response, EPA notes that New Jersey has prosecuted two boat captains criminally for discharging vessel waste. New Jersey conducted an investigation of the fishing fleet operating out of the Belmar Marina and found one boat that was discharging into the Shark River, a designated No Discharge Area. Further, it must be noted that EPA's decision in this matter is limited to the adequacy and availability of pumpout facilities, and these comments are not relevant to this specific decision.

A comment was received that contends the establishment of a No Discharge Area makes the use of Type I and Type II MSDs illegal. In response, this is not the case. The discharge of sewage from any vessels while inside the Area is prohibited. The use of a Type I or Type II MSD is not illegal once outside the No Discharge Area.

One individual advocated enforcing the existing laws, revising the standards for Type I and Type II MSDs to reflect the current state of the art technology and establishment of No Discharge Areas only where scientific evidence shows that boats discharging sewage are the cause of the water quality problems. In response, EPA agrees that existing laws should be enforced. EPA also agrees that technology-based standards should be determined by the best technology available. EPA Headquarters is currently considering a review of the technology for this purpose. We disagree that No Discharge Areas should only be established in areas where boaters have been determined to be the source of water quality problems. EPA supports the reduction of all known sources of pollution to address water quality impairment problems. These sources should include point and non-point sources alike.

One comment received supports the establishment of the No Discharge Area.

This petition was made by the NJDEP in cooperation with the North Coast Regional Environmental Planning Council (NCREPC), New Jersey Marine Sciences, Marine Trades Association of New Jersey, Monmouth County Planning Board, Monmouth County Environmental Council and Monmouth County Board of Health. Members of the NCREPC include the Borough of Eatontown, the Borough of Fair Haven, the Borough of Little Silver, the City of Long Branch, the Borough of Monmouth Beach, the Borough of Oceanport, the Borough of Red Bank, the Borough of Rumson, the Borough of Sea Bright, the Borough of Shrewsbury, the Township of Shrewsbury, the Borough of Tinton Falls, and the Borough of West Long Branch. Upon receipt of this affirmative determination in response to this petition, NJDEP will completely prohibit the discharge of sewage, whether treated or not, from any vessel in Shrewsbury River in accordance with section 312(f)(3) of the Clean Water Act and 40 CFR 140.4(a).

The Shrewsbury River is located in Monmouth County, New Jersey, and is part of the Atlantic Coastal Drainage Basin. The Shrewsbury River drains approximately 27 square miles of urban/suburban residential development and agricultural lands. The Shrewsbury River runs easterly from Eatontown, Tinton Falls, and West Long Branch, New Jersey and then joins the Navesink River and empties into Sandy Hook Bay. The No Discharge Area will include the navigable waters of the Shrewsbury River and all its tributaries downstream to the point where the Route 36 Bridge crosses the river. The eastern boundary of the Area is a line from Lat./Long. 73°58′45″, 40°22′40″ to Lat./Long. 73°58′58″, 40°23′04″. The western boundary of the Area is at Lat./Long. 74°06′48″, 40°19′12″.

Information submitted by the State of New Jersey and the Shrewsbury Regional Environmental Planning Council states that there are six existing pumpout facilities at five different locations available to service vessels which use the Shrewsbury River. Atlantis Yacht Club, located at 66 River Avenue, Monmouth Beach, operates a stationary pumpout. The pumpout is available from 8:00 a.m. to 5:00 p.m. beginning April until October and is operated by the marina staff. A $5.00 fee is charged for the use of the pumpout. Carriage House Marina, located at 1200 Ocean Avenue, Sea Bright, operates a stationary pumpout and a portable pumpout. The pumpouts are available from 9:00 a.m. to 6:00 p.m. beginning May until October and is operated by the marina staff. A fee of $5.00 is charged for the use of the pumpout. Channel Club Marina, located at Channel Drive, Monmouth Beach, operates a stationary pumpout. The pumpout is available from 8:00 a.m. to 6:00 p.m. beginning May until October and is operated by the marina staff. No fee is charged for use of the pumpout. Navesink Marina, located at 1410 Ocean Avenue, Sea Bright, operates a stationary pumpout. The pumpout is available from 8:00 a.m. to 5:00 p.m. beginning April until October and is operated by the marina staff. A $5.00 fee is charged for the use of the pumpout. Oceanport Landing, located at 417 River Street, Oceanport, operates a portable pumpout. The pumpout is available from 8:00 a.m. to 4:30 p.m. beginning April until September and is operated by the marina staff. A $5.00 fee is charged for use of the pumpout. In the case of slip holders and residents of Oceanport, the $5.00 fee is waived. None of the facilities have draft restrictions which would exclude boats access to the pumpouts.

Vessel waste generated from the pumpout facilities within the No Discharge Area is discharged into municipal sewer lines and is conveyed to the Northeast Monmouth Regional Sewage Authority (NJPDES Permit No. NJ0024520) at 1 Highland Avenue in Monmouth Beach for treatment.

According to the State's petition, the maximum daily vessel population for the waters of Shrewsbury River is approximately 2115 vessels. This estimate is based on (1) vessels docked at marinas and yacht clubs (1303 vessels), (2) vessels docked at non-marina facilities (584 vessels) and (3) transient vessels (228 vessels). The vessel population based on length is 2240 vessels less than 26 feet in length, 700 vessels between 26 feet and 40 feet in length and 175 vessels greater than 40 feet in length. Based on number and size of boats, and using various methods to estimate the number of holding tanks, it is estimated that between two and four pumpouts are needed for the Shrewsbury River. As previously stated, five pumpout facilities are currently available to service the boating population. Additionally, three additional pumpouts have applied for pumpout grant funding.

The EPA hereby makes a final affirmative determination that adequate facilities for the safe and sanitary removal and treatment of sewage from all vessels are reasonably available for the Shrewsbury River in the County of Monmouth, New Jersey.

Dated: May 8, 2000.

Jeanne M. Fox,

Regional Administrator, Region 2.

[FR Doc. 00–12795 Filed 5–19–00; 8:45 am]

BILLING CODE 6560–50–P

ENVIRONMENTAL PROTECTION AGENCY

[FRL–6704–4]

Application From the States of Utah and Arizona for the Prohibition of the Discharge of Vessel Sewage Into Lake Powell; Notice of Receipt

The States of Utah and Arizona have submitted a joint application to the United States Environmental Protection Agency (EPA) to prohibit the discharge of sewage from all vessels into Lake Powell. Section 312(f)(3) of the Clean Water Act, 33 U.S.C. 1322(f)(3), allows States to prohibit discharges of sewage, whether treated or not, into some or all of their waters, except that no such prohibition shall apply until the EPA determines that adequate facilities are reasonably available for the safe and sanitary removal and treatment of sewage from all vessels on the waters to be covered by the prohibition.

For the reasons explained below, the EPA proposes to make an affirmative determination that adequate facilities exist, meaning that the States' complete prohibition of sewage discharges from vessels on Lake Powell would become effective. The EPA officials authorized to make this determination are the undersigned Regional Administrators for EPA Regions VIII and IX. (Region VIII includes Utah, and Region IX includes Arizona.) Before making this determination, however, the EPA is publishing this notice in order to announce that it has received this application and to provide any interested member of the public with an opportunity to comment on the application and/or the EPA's proposed determination.

Utah and Arizona submitted their joint application to the EPA in January of 2000 in cooperation with the Navajo Nation and the National Park Service, Glen Canyon National Recreational Area. According to the application, jurisdictional and enforcement authority for Lake Powell will reside with the respective States and the National Park Service. The Utah Department of Environmental Quality, the Utah Department of Natural Resources, the Arizona Department of Environmental Quality, the Arizona Department of Fish and Game and the National Park Service, Glen Canyon National Recreation Area will all be the enforcing agents should this application be approved. The United States Coast Guard also will be asked to continue its enforcement role.

The joint application states that Lake Powell is 186 miles long, with approximately 2000 miles of shore line. It receives 2.5 million visitors annually, with 4.3 million visitor days. Approximately 95% of the Lake is in Utah and 5% is in Arizona. The Navajo Nation bounds on the southeast portion of Lake Powell, but the jurisdiction of the Navajo Nation is not affected by the application of Utah and Arizona.

As described in more detail in the States' application, there are six authorized vessel entry/take-out points on the Lake: Wahweap, Stateline, Hite, Bullfrog, Hall's Crossing, and Antelope Point. The first five locations have major pumpout facilities. Due to the geomorphology of the Lake, it is nearly impossible to remove or launch a vessel from any other point on the Lake. A major water accessible vessel pumpout facility is also located at Dangling Rope. Each major facility has multiple pumps. In addition, eight supplemental mechanically operated floating pump out facilities are located at various areas on the Lake. These pumps are: Warm Creek Bay, located in Warm Creek Bay; Dominiquez Butte, near Lake Powell Channel Mile Marker 22; Rock Creek, near Lake Powell Channel Mile Marker 35; Oak Bay, located near Lake Powell Channel Mile Marker 51; Escalante, located near Lake Powell Channel Mile Marker 68A; Rincon, near Lake Powell Channel Mile Marker 77A; Hall's Creek Bay, located in Hall's Creek Bay on the Eastside; and Forgotten Canyon, near Lake Powell Channel Mile Marker 106. There are sixty-nine pumpouts on the Lake. All the facilities identified above are operational 24 hours per day. None of the facilities identified will exclude any vessel because of insufficient water depth adjacent to the facility. There are no fees to pump out at any facility. Treatment of all wastes from the pumpout facilities is to be in conformance with Federal law.

The States of Utah and Arizona, the Navajo Nation, and the National Park Service have stated that the complete prohibition of discharge from all vessels of any sewage, treated or not, into Lake Powell is necessary. Numerous beach closures have occurred because of fecal coliform bacterial contamination over the last several years. While it has not been demonstrated that these closures are due solely to vessel sewage, such discharges may be the cause of the closures. Prevention of discharge of human wastes to the waters of the Lake is critically important to protect public health and water quality of this important national resource.

The joint application also provides the following information regarding vessel use on Lake Powell:

VESSELS WITH INSTALLED TOILETS

	Resident	Transient	Total No.
Peak* Day Usage (Memorial Day through Labor Day)	1,800	5,600	7,400
Off Peak Day Usage	275	225	500

*July 4, 1999.

PEAK* PUMPING STATION USE CALCULATIONS

Total Vessels	7,400.
Average Stay	5 days.
Pumpout Events/Day	1,480.
Pumps/Hoses	69.
Pumpouts per Station per Day	22.
Estimated Pumpout time per event.	15 minutes.
Total Time of Pumping per Station @ Peak* Day.	5.5 hours.

*July 4, 1999.

For more information about the requirements for state applications for complete prohibitions of sewage discharges pursuant to section 312(f)(3) of the Clean Water Act, please see 40 CFR 140.4(a). Copies of the application letters from the States of Utah and Arizona are available for public inspection and copying at the EPA's Denver, Colorado office. The person to contact for information is Douglas Johnson (8EPR-EP), U.S. Environmental Protection Agency, Region VIII, 999 18th Street, Denver, CO, 80202–2466 or by telephone at (303) 312–6834. If you are interested in commenting on this application, please address your comments to Mr. Johnson and be sure that your comments are received by the EPA no later than July 6, 2000.

Dated: May 12, 2000.

Jack W. McGraw,

Acting Regional Administrator, Region VIII.

Dated: May 5, 2000.

Laura Yoshii,

Deputy Regional Administrator, Region IX.

[FR Doc. 00–12790 Filed 5–19–00; 8:45 am]

BILLING CODE 6560–50–P

FEDERAL COMMUNICATIONS COMMISSION

Public Information Collections Approved by Office of Management and Budget

May 15, 2000.

The Federal Communications Commission (FCC) has received Office of Management and Budget (OMB) approval for the following public information collections pursuant to the Paperwork Reduction Act of 1995, Pub. L. 96–511. An agency may not conduct or sponsor a collection of information unless it displays a currently valid control number. Not withstanding any other provisions of law, no person shall be subject to any penalty for failing to comply with a collection of information subject to the Paperwork Reduction Act (PRA) that does not display a valid control number. Questions concerning the OMB control numbers and expiration dates should be directed to Judy Boley, Federal Communications Commission, (202) 418–0214.

Federal Communications Commission

OMB Control No.: 3060–0926.

Expiration Date: 05/31/2003.

Title: Transfer of the 4.9 GHz from Federal Government Use to the Private Sector—NPRM.

Form No.: FCC 601–605.

Estimated Annual Burden: 11,300 burden hours annually, 19 hours per response; 600 responses.

Description: The various information reporting and verification requirements, and the prospective coordination requirement will be used by the Commission to verify licensee compliance with Commission rules and regulations, and to ensure that licensees continue to fulfill their statutory responsibilities in accordance with the Communications Act of 1934. Such information has been used in the past and will continue to be used to minimize interference, verify that applicants are legally and technically qualified to hold licenses, and to determine compliance with Commission rules.

OMB Control No.: 3060–0809.

Expiration Date: 04/30/2003.

Title: Communications Assistance for Law Enforcement Act, Report and Order and Order on Reconsideration.

Form No.: N/A.

Estimated Annual Burden: 36,000 burden hours annually, approximately 6 hours per response; 6,000 responses.

Description: The information submitted to the Commission will be used to determine whether or not telecommunications carriers are in conformance with the Communications Assistance for Law Enforcement Act requirements.

Federal Communications Commission.

Magalie Roman Salas,

Secretary.

[FR Doc. 00–12766 Filed 5–19–00; 8:45 am]

BILLING CODE 6712–01–U

FEDERAL DEPOSIT INSURANCE CORPORATION

Agency Information Collection Activities: Submission for OMB Review; Comment Request

AGENCY: Federal Deposit Insurance Corporation (FDIC).

ACTION: Notice of information collection to be submitted to OMB for review and approval under the Paperwork Reduction Act of 1995.

SUMMARY: In accordance with requirements of the Paperwork Reduction Act of 1995 (44 U.S.C. 3501 et seq.), the FDIC hereby gives notice that it plans to submit to the Office of Management and Budget (OMB) a request for OMB review and approval of the information collection system described below.

Type of Review: Renewal of a currently approved collection.

Title: Procedures for Monitoring Bank Protection Act Compliance.

OMB Number: 3064–0095.

Annual Burden:

Estimated annual number of respondents: 5,800.

Estimated time per response: ½ hour.

Average annual burden hours: 2,900 hours.

Expiration Date of OMB Clearance: June 30, 2000.

OMB Reviewer: Alexander T. Hunt, (202) 395–7860, Office of Management and Budget, Office of Information and Regulatory Affairs, Washington, DC 20503.

FDIC Contact: Tamara R. Manly, (202) 898–7453, Office of the Executive Secretary, Room F–4058, Federal Deposit Insurance Corporation, 550 17th Street NW, Washington, DC 20429.

Comments: Comments on this collection of information are welcome and should be submitted on or before June 21, 2000 to both the OMB reviewer and the FDIC contact listed above.

ADDRESSES: Information about this submission, including copies of the proposed collection of information, may be obtained by calling or writing the FDIC contact listed above.

SUPPLEMENTARY INFORMATION: The collection of information is used by FDIC bank examiners to assure that insured nonmember banks comply with 12 CFR Part 326 (Minimum Security Devices and Procedures for Insured Nonmember Banks), which implements the Bank Protection Act of 1968 and to review bank security programs.

Federal Deposit Insurance Corporation.

Robert E. Feldman,

Executive Secretary.

[FR Doc. 00–12730 Filed 5–19–00; 8:45 am]

BILLING CODE 6714–01–P

FEDERAL ELECTION COMMISSION

[Notice 2000–11]

Computerized Magnetic Media Requirements for Presidential Committees

AGENCY: Federal Election Commission.

ACTION: Announcement of Changes to the Computerized Magnetic Media Requirements for Presidential Primary, General Election and Convention Committees.

SUMMARY: The Commission has revised its document entitled ''Computerized Magnetic Media Requirements for Title 26 Candidates/Committees Receiving Federal Funding'' (''CMMR''). The CMMR sets forth technical standards designed to ensure the compatibility of magnetic media provided for Commission use during the matching fund submission process and mandatory audits of these publicly-funded campaign committees.

EFFECTIVE DATE: April 13, 2000.

FOR FURTHER NFORMATION CONTACT: Rick Halter, Deputy Assistant Staff Director, or Charles Ratcliff, Data Systems Development Division; 999 E Street NW, Washington, DC 20463; (202) 694–1200 (Mr. Halter), (202) 694–1295 (Mr. Ratcliff), or (800) 424–9530 (toll free).

SUPPLEMENTARY INFORMATION: On June 21, 1990, the Federal Election Commission adopted a document entitled ''Computerized Magnetic Media Requirements for Title 26 Candidates/Committees Receiving Federal Funding'' (''CMMR''). The CMMR was revised on

January 30, 1992 to reflect technological advances during the intervening period (*see* 57 FR 4453 (Feb. 5, 1992)), and again on January 11, 1996 (*see* 61 FR 6245 (Feb. 16, 1996)). This Notice summarizes the most recent revisions, which were adopted by the Commission on April 13, 2000 and apply to all publicly-funded committees that participate in the 2000 presidential election.

The CMMR sets forth technical standards designed to ensure the compatibility of magnetic media provided for Commission use during the matching fund submission process, which is also discussed in the Commission's ''Guideline for Presentation in Good Order'' (''PIGO''), and the mandatory audits of publicly-funded presidential campaign and convention committees. Each presidential candidate and convention committee must agree to maintain and provide computerized magnetic media in the format prescribed by the CMMR, if the committee maintains or uses computerized information containing any specified categories of data. *See* 11 CFR 9003.1(b)(4), 9008.3(a)(4)(v), and 9033.1(b)(5). The technical standards in the CMMR include general requirements for magnetic tape and magnetic diskettes, as well as file format specifications for records of receipts, including contributors, vendors, invoices, bank accounts and check files.

Until this latest revision, the CMMR included file format specifications for records of disbursements. While the same information is still required, no particular format is now specified.

The CMMR has also been revised to reflect technological advances in computer software since the 1996 revisions. It thus provides campaigns with more options than the previous version of the CMMR. The Commission continues to encourage committees to provide samples of their magnetic tape or magnetic diskettes, so that the Commission may determine whether the samples comply with the specifications established.

The CMMR is included as Appendix 2 to the Commission's *Financial Control and Compliance Manual For Presidential Primary Candidates Receiving Public Financing* (April 2000). It is also available from the Commission's Public Records Office or the Audit Division, and will soon be available on the Commission's web site, www.fec.gov. The Public Records Office can be reached at (800) 424–9530, extension #3 (toll free), or 202–694–1120. That Office also responds to E-mail requests at pubrec@fec.gov.

Please note that the technical requirements found in the CMMR are not intended to promote or discourage the use of any particular computer system or software. The Commission believes that committees should have as much discretion as possible in selecting the computer equipment they wish to use, determining what types of financial records and information should be computerized, and deciding how the computerized information is maintained. However, committees are expected to present this financial information to the Commission in the format specified in the CMMR.

Dated: May 17, 2000.

Darryl R. Wold,

Chairman, Federal Election Commission.

[FR Doc. 00–12775 Filed 5–19–00; 8:45 am]

BILLING CODE 6715–01–P

FEDERAL EMERGENCY MANAGEMENT AGENCY

[FEMA–1327–DR]

Kansas; Amendment No. 1 to Notice of a Major Disaster Declaration

AGENCY: Federal Emergency Management Agency (FEMA).

ACTION: Notice.

SUMMARY: This is a notice of the Presidential declaration of a major disaster for the State of Kansas (FEMA–1327–DR), dated May 3, 2000, and related determinations.

EFFECTIVE DATE: May 11, 2000

FOR FURTHER INFORMATION CONTACT: Madge Dale, Response and Recovery Directorate, Federal Emergency Management Agency, Washington, DC 20472, (202) 646–3772.

SUPPLEMENTARY INFORMATION: The notice of a major disaster for the State of Kansas is hereby amended to include the Public Assistance program for the following areas among those areas determined to have been adversely affected by the catastrophe declared a major disaster by the President in his declaration of May 3, 2000:

Labette and Neosho Counties for Public Assistance.

The following Catalog of Federal Domestic Assistance Numbers (CFDA) are to be used for reporting and drawing funds: 83.537, Community Disaster Loans; 83.538, Cora Brown Fund Program; 83.539, Crisis Counseling; 83.540, Disaster Legal Services Program; 83.541, Disaster Unemployment Assistance (DUA); 83.542, Fire Suppression Assistance; 83.543, Individual and Family Grant (IFG) Program; 83.544, Public Assistance Grants; 83.545, Disaster Housing Program; 83.548, Hazard Mitigation Grant Program.

Lacy E. Suiter,

Executive Associate Director, Response and Recovery Directorate.

[FR Doc. 00–12811 Filed 5–19–00; 8:45 am]

BILLING CODE 6718–02–P

FEDERAL EMERGENCY MANAGEMENT AGENCY

[FEMA–1328–DR]

Missouri; Major Disaster and Related Determinations

AGENCY: Federal Emergency Management Agency (FEMA).

ACTION: Notice.

SUMMARY: This is a notice of the Presidential declaration of a major disaster for the State of Missouri (FEMA–1328–DR), dated May 12, 2000, and related determinations.

EFFECTIVE DATE: May 12, 2000.

FOR FURTHER INFORMATION CONTACT: Madge Dale, Response and Recovery Directorate, Federal Emergency Management Agency, Washington, DC 20472, (202) 646–3772.

SUPPLEMENTARY INFORMATION: Notice is hereby given that, in a letter dated May 12, 2000, the President declared a major disaster under the authority of the Robert T. Stafford Disaster Relief and Emergency Assistance Act (42 U.S.C. 5121 *et seq.*), as follows:

I have determined that the damage in certain areas of the State of Missouri, resulting from severe thunderstorms and flash flooding on May 6–7, 2000, is of sufficient severity and magnitude to warrant a major disaster declaration under the Robert T. Stafford Disaster Relief and Emergency Assistance Act, P.L. 93–288, as amended (''the Stafford Act''). I, therefore, declare that such a major disaster exists in the State of Missouri.

In order to provide Federal assistance, you are hereby authorized to allocate from funds available for these purposes, such amounts as you find necessary for Federal disaster assistance and administrative expenses.

You are authorized to provide Individual Assistance and Hazard Mitigation in the designated areas and any other forms of assistance under the Stafford Act you may deem appropriate. Consistent with the requirement that Federal assistance be supplemental, any Federal funds provided under the Stafford Act for Hazard Mitigation will be limited to 75 percent of the total eligible costs. If Public Assistance is later requested and warranted, Federal funds provided under that program will also be limited to 75 percent of the total eligible costs.

Further, you are authorized to make changes to this declaration to the extent allowable under the Stafford Act.

Notice is hereby given that pursuant to the authority vested in the Director of the Federal Emergency Management Agency under Executive Order 12148, I hereby appoint Peter Martinasco of the Federal Emergency Management Agency to act as the Federal Coordinating Officer for this declared disaster.

I do hereby determine the following areas of the State of Missouri to have been affected adversely by this declared major disaster:

Crawford, Franklin, Gasconade, Jefferson, St. Charles, Ste. Genevieve, St. Francois, St. Louis County, Warren and Washington Counties for Individual Assistance.

All counties within the State of Missouri are eligible to apply for assistance under the Hazard Mitigation Grant Program.

(The following Catalog of Federal Domestic Assistance Numbers (CFDA) are to be used for reporting and drawing funds: 83.537, Community Disaster Loans; 83.538, Cora Brown Fund Program; 83.539, Crisis Counseling; 83.540, Disaster Legal Services Program; 83.541, Disaster Unemployment Assistance (DUA); 83.542, Fire Suppression Assistance; 83.543, Individual and Family Grant (IFG) Program; 83.544, Public Assistance Grants; 83.545, Disaster Housing Program; 83.548, Hazard Mitigation Grant Program.)

James L. Witt,

Director.

[FR Doc. 00–12804 Filed 5–19–00; 8:45 am]

BILLING CODE 6718–02–P

FEDERAL EMERGENCY MANAGEMENT AGENCY

[FEMA–1329–DR]

New Mexico; Major Disaster and Related Determinations

AGENCY: Federal Emergency Management Agency (FEMA).

ACTION: Notice.

SUMMARY: This is a notice of the Presidential declaration of a major disaster for the State of New Mexico (FEMA–1329–DR), dated May 13, 2000, and related determinations.

EFFECTIVE DATE: May 13, 2000.

FOR FURTHER INFORMATION CONTACT: Madge Dale, Response and Recovery Directorate, Federal Emergency Management Agency, Washington, DC 20472, (202) 646–3772.

SUPPLEMENTARY INFORMATION: Notice is hereby given that, in a letter dated May 13, 2000, the President declared a major disaster under the authority of the Robert T. Stafford Disaster Relief and Emergency Assistance Act (42 U.S.C. 5121 *et seq.*), as follows:

I have determined that the damage in certain areas of the State of New Mexico, resulting from a severe forest fire beginning on May 5, 2000, and continuing is of sufficient severity and magnitude to warrant a major disaster declaration under the Robert T. Stafford Disaster Relief and Emergency Assistance Act, P.L. 93–288, as amended (''the Stafford Act''). I, therefore, declare that such a major disaster exists in the State of New Mexico.

In order to provide Federal assistance, you are hereby authorized to allocate from funds available for these purposes, such amounts as you find necessary for Federal disaster assistance and administrative expenses.

You are authorized to provide Individual Assistance and Hazard Mitigation in the designated areas and any other forms of assistance under the Stafford Act you may deem appropriate. Consistent with the requirement that Federal assistance be supplemental, any Federal funds provided under the Stafford Act for Hazard Mitigation will be limited to 75 percent of the total eligible costs. If Public Assistance is requested and is determined to be warranted, Federal funds provided under that program will also be limited to 75 percent of the total eligible costs.

Further, you are authorized to make changes to this declaration to the extent allowable under the Stafford Act.

The time period prescribed for the implementation of section 310(a), Priority to Certain Applications for Public Facility and Public Housing Assistance, 42 U.S.C. 5153, shall be for a period not to exceed six months after the date of this declaration.

Notice is hereby given that pursuant to the authority vested in the Director of the Federal Emergency Management Agency under Executive Order 12148, I hereby appoint Mark S. Ghilarducci of the Federal Emergency Management Agency to act as the Federal Coordinating Officer for this declared disaster.

I do hereby determine the following areas of the State of New Mexico to have been affected adversely by this declared major disaster:

Bernalillo, Cibola, Los Alamos, McKinley, Mora, Rio Arriba, Sandoval, San Juan, San Miguel, Santa Fe, Taos, and Torrance Counties for Individual Assistance.

All counties within the State of New Mexico are eligible to apply for assistance under the Hazard Mitigation Grant Program.

(The following Catalog of Federal Domestic Assistance Numbers (CFDA) are to be used for reporting and drawing funds: 83.537, Community Disaster Loans; 83.538, Cora Brown Fund Program; 83.539, Crisis Counseling; 83.540, Disaster Legal Services Program; 83.541, Disaster Unemployment Assistance (DUA); 83.542, Fire Suppression Assistance; 83.543, Individual and Family Grant (IFG) Program; 83.544, Public Assistance Grants; 83.545, Disaster Housing Program; 83.548, Hazard Mitigation Grant Program.)

James L. Witt,

Director.

[FR Doc. 00–12805 Filed 5–19–00; 8:45 am]

BILLING CODE 6718–02–P

FEDERAL EMERGENCY MANAGEMENT AGENCY

[FEMA–1329–DR]

New Mexico; Amendment No. 1 to Notice of a Major Disaster Declaration

AGENCY: Federal Emergency Management Agency (FEMA).

ACTION: Notice.

SUMMARY: This is a notice of the Presidential declaration of a major disaster for the State of New Mexico (FEMA–1329–DR), dated May 13, 2000, and related determinations.

EFFECTIVE DATE: May 16, 2000.

FOR FURTHER INFORMATION CONTACT: Madge Dale, Response and Recovery Directorate, Federal Emergency Management Agency, Washington, DC 20472, (202) 646–3772.

SUPPLEMENTARY INFORMATION: The notice of a major disaster for the State of New Mexico is hereby amended to include the following areas among those areas determined to have been adversely affected by the catastrophe declared a major disaster by the President in his declaration of May 13, 2000. Act (42 U.S.C. 5121 *et seq.*), as follows:

Chaves, DeBaca, Dona Ana, Eddy, Guadalupe, Lincoln, Otero, Sierra, and Socorro Counties for Individual Assistance.

(The following Catalog of Federal Domestic Assistance Numbers (CFDA) are to be used for reporting and drawing funds: 83.537, Community Disaster Loans; 83.538, Cora Brown Fund Program; 83.539, Crisis Counseling; 83.540, Disaster Legal Services Program; 83.541, Disaster Unemployment Assistance (DUA); 83.542, Fire Suppression Assistance; 83.543, Individual and Family Grant (IFG) Program; 83.544, Public Assistance Grants; 83.545, Disaster Housing Program; 83.548, Hazard Mitigation Grant Program)

Lacy E. Suiter,

Executive Associate Director, Response and Recovery Directorate.

[FR Doc. 00–12806 Filed 5–19–00; 8:45 am]

BILLING CODE 6718–02–P

FEDERAL EMERGENCY MANAGEMENT AGENCY

[FEMA–3154–EM]

New Mexico; Emergency and Related Determinations

AGENCY: Federal Emergency Management Agency (FEMA).

ACTION: Notice.

SUMMARY: This is a notice of the Presidential declaration of an emergency for the State of New Mexico (FEMA–3154-EM), dated May 10, 2000, and related determinations.

EFFECTIVE DATE: May 10, 2000.

FOR FURTHER INFORMATION CONTACT: Madge Dale, Response and Recovery Directorate, Federal Emergency Management Agency, Washington, DC 20472, (202) 646–3772.

SUPPLEMENTARY INFORMATION: Notice is hereby given that, in a letter dated May 10, 2000, the President declared an emergency under the authority of the Robert T. Stafford Disaster Relief and Emergency Assistance Act (42 U.S.C. 5121 *et seq.*), as follows:

I have determined that the emergency conditions in certain areas of the State of New Mexico, resulting from severe fire threats on May 10, 2000, and continuing is of sufficient severity and magnitude to warrant an emergency declaration under the Robert T. Stafford Disaster Relief and Emergency Assistance Act, P.L. 93–288, as amended (''the Stafford Act''). I, therefore, declare that such an emergency exists in the State of New Mexico.

You are authorized to coordinate all disaster relief efforts which have the purpose of alleviating the hardship and suffering caused by the emergency on the local population, and to provide appropriate assistance for required emergency measures, authorized under Title V of the Stafford Act to save lives, protect property and public health and safety, or to lessen or avert the threat of a catastrophe in the designated areas. You are further authorized to identify, mobilize, and provide at your discretion, equipment and resources necessary to alleviate the impacts of the emergency and such other forms of assistance under Title V of the Stafford Act, as you may deem appropriate. In addition, you are authorized to provide emergency protective measures (Category B). This assistance excludes regular time costs for subgrantees regular employees. Assistance under this emergency is authorized at 75 percent Federal funding for eligible costs.

In order to provide Federal assistance, you are hereby authorized to allocate from funds available for these purposes, such amounts as you find necessary for Federal disaster assistance and administrative expenses.

Further, you are authorized to make changes to this declaration to the extent allowable under the Stafford Act.

Notice is hereby given that pursuant to the authority vested in the Director of the Federal Emergency Management Agency under Executive Order 12148, I hereby appoint Mark S. Ghilarducci of the Federal Emergency Management Agency to act as the Federal Coordinating Officer for this declared emergency.

I do hereby determine the following areas of the State of New Mexico to have been affected adversely by this declared emergency:

The counties of Los Alamos, Sandoval and Santa Fe for assistance as specified in the declaration letter quoted above.

The following Catalog of Federal Domestic Assistance Numbers (CFDA) are to be used for reporting and drawing funds: 83.537, Community Disaster Loans; 83.538, Cora Brown Fund Program; 83.539, Crisis Counseling; 83.540, Disaster Legal Services Program; 83.541, Disaster Unemployment Assistance (DUA); 83.542, Fire Suppression Assistance; 83.543, Individual and Family Grant (IFG) Program; 83.544, Public Assistance Grants; 83.545, Disaster Housing Program; 83.548, Hazard Mitigation Grant Program.

James L. Witt,

Director.

[FR Doc. 00–12809 Filed 5–19–00; 8:45 am]

BILLING CODE 6718–02–P

FEDERAL EMERGENCY MANAGEMENT AGENCY

[FEMA–3154–EM]

New Mexico; Amendment No. 1 to Notice of an Emergency Declaration

AGENCY: Federal Emergency Management Agency (FEMA).

ACTION: Notice.

SUMMARY: This notice amends the notice of an emergency for the State of New Mexico, (FEMA–3154–EM), dated May 10, 2000, and related determinations.

EFFECTIVE DATE: May 11, 2000.

FOR FURTHER INFORMATION CONTACT: Madge Dale, Response and Recovery Directorate, Federal Emergency Management Agency, Washington, DC 20472, (202) 646–3772.

SUPPLEMENTARY INFORMATION: The notice of an emergency for the State of New Mexico is hereby amended to include the following area among those areas determined to have been adversely affected by the catastrophe declared an emergency by the President in his declaration of May 10, 2000:

Rio Arriba County for assistance as specified in the May 10, 2000, declaration letter.

(The following Catalog of Federal Domestic Assistance Numbers (CFDA) are to be used for reporting and drawing funds: 83.537, Community Disaster Loans; 83.538, Cora Brown Fund Program; 83.539, Crisis Counseling; 83.540, Disaster Legal Services Program; 83.541, Disaster Unemployment Assistance (DUA); 83.542, Fire Suppression Assistance; 83.543, Individual and Family Grant (IFG) Program; 83.544, Public Assistance Grants; 83.545, Disaster Housing Program; 83.548, Hazard Mitigation Grant Program.)

Robert J. Adamcik,

Deputy Associate Director, Response and Recovery Directorate.

[FR Doc. 00–12810 Filed 5–19–00; 8:45 am]

BILLING CODE 6718–02–P

FEDERAL EMERGENCY MANAGEMENT AGENCY

[Docket No.: FEMA–REP–1–RI–1]

Rhode Island Ingestion Pathway Plan for Millstone Nuclear Power Plant and Pilgrim Nuclear Power Station

AGENCY: Federal Emergency Management Agency (FEMA).

ACTION: Notice.

SUMMARY: FEMA gives notice of approval of the State of Rhode Island Ingestion Pathway Plan in support of the overall emergency preparedness for the Millstone Nuclear Power Plant and Pilgrim Nuclear Power Station.

DATES: This certification and approval are effective as of April 14, 2000.

FOR FURTHER INFORMATION CONTACT: Regional Director, FEMA Region I, 442 J.W. McCormack POCH Boston, and Massachusetts 02109. Please refer to Docket No. FEMA–REP–1–RI–1.

SUPPLEMENTARY INFORMATION: In accordance with the Federal Emergency Management Agency (FEMA) Rule 44 CFR, Part 350, the State of Rhode Island submitted its ingestion pathway plan in support of the overall emergency preparedness for the Millstone Nuclear Power Plant and Pilgrim Nuclear Power Station. The plan was submitted to the Regional Director of FEMA Region I for review and approval on April 3, 1996. The Regional Director forwarded a recommendation for formal approval of the Rhode Island Plan to FEMA Headquarters for review and approval on November 29, 1999, in accordance with Section 350.11. This evaluation was based on a review of the plan; the joint exercise conducted on August 10–11, 1999, in accordance with section 350.9 for the exercise for Pilgrim Nuclear Power Station; and, a report of the public meeting held on March 20, 2000, to discuss the portion of the State of Rhode Island's plan and the Millstone

Nuclear Power Plant plan for Connecticut Communities in accordance with section 350.10. Based on an overall evaluation, I find and determine that the State of Rhode Island Ingestion Pathway plans can be implemented and are adequate to protect the health and safety of the public living in the Rhode Island portion of the ingestion pathway of Millstone Nuclear Power Plant and Pilgrim Nuclear Power Station by providing reasonable assurance that appropriate protective measures can be taken in the event of an accident at either one of these sites. FEMA will continue to review the status of the ingestion pathway plan in accordance with Sections 350.5 and 350.9.

Dated: May 16, 2000.

Kay C. Goss,

Associate Director for Preparedness, Training, and Exercises.

[FR Doc. 00–12808 Filed 5–19–00; 8:45 am]

BILLING CODE 6718–06–P

FEDERAL RESERVE SYSTEM

Agency Information Collection Activities: Proposed Collection; Comment Request

AGENCY: Board of Governors of the Federal Reserve System (Board).

ACTION: Notice and request for comment.

SUMMARY: In accordance with the requirements of the Paperwork Reduction Act of 1995 (44 U.S.C. chapter 35), the Board, the Federal Deposit Insurance Corporation (FDIC), and the Office of the Comptroller of the Currency (OCC) (collectively, the ''agencies''), hereby give notice that they plan to submit to the Office of Management and Budget (OMB) requests for review of the information collection system described below. The Agencies may not conduct or sponsor, and the respondent is not required to respond to, an information collection that has been extended, revised, or implemented on or after October 1, 1995, unless it displays a currently valid OMB control number. The Agencies, under the auspices of the Federal Financial Institutions Examination Council (FFIEC), propose to extend without revision the following currently approved information collection: the Country Exposure Report for U.S. Branches and Agencies of Foreign Banks (FFIEC 019). However, minor clarifications are proposed to the instructions. The Board is publishing the request for extension on behalf of the agencies. At the end of the comment period, the comments and recommendations received will be analyzed to determine whether the FFIEC and the agencies should modify the information collections. The Board will then submit the reports to OMB for review and approval.

DATES: Comments must be submitted on or before July 21, 2000.

ADDRESSES: Interested parties are invited to submit written comments to any or all of the agencies. All comments should refer to the OMB control number and will be shared among the agencies.

Board: Written comments on the FFIEC 019 should be addressed to Jennifer J. Johnson, Secretary, Board of Governors of the Federal Reserve System, 20th and C Streets, NW, Washington, DC 20551, or mailed electronically to regs.comments@federalreserve.gov. Comments addressed to Ms. Johnson also may be delivered to the Board's mail room between 8:45 a.m. and 5:15 p.m., and to the security control room outside of those hours. Both the mail room and the security control room are accessible from the courtyard entrance on 20th Street between Constitution Avenue and C Street, NW. Comments received may be inspected in room M–P–500 between 9:00 a.m. and 5:00 p.m., except as provided in section 261.12 of the Board's Rules Regarding Availability of Information, 12 CFR 261.12(a). A copy of the comments may also be submitted to the OMB desk officer for the agencies: Alexander T. Hunt, Office of Information and Regulatory Affairs, Office of Management and Budget, New Executive Office Building, Room 3208, Washington, DC 20503.

FOR FURTHER INFORMATION CONTACT: Additional information or a copy of the collection may be requested from: *Board:* Mary M. West, Chief, Financial Reports Section, (202) 452–3829, Division of Research and Statistics, Board of Governors of the Federal Reserve System, 20th and C Streets, NW, Washington, DC 20551. Telecommunications Device for the Deaf (TDD) users may contact Diane Jenkins, (202) 452–3544, Board of Governors of the Federal Reserve System, 20th and C Streets, NW, Washington, DC 20551.

SUPPLEMENTARY INFORMATION: Proposal to extend for three years with minor instructional clarification the following currently approved collection of information:

Report title: Country Exposure Report for U.S. Branches and Agencies of Foreign Banks.

Form number: FFIEC 019.OMB number: 7100–0213.

Frequency of response: Quarterly.

Affected Public: U.S. branches and agencies of foreign banks.

Number of respondents: 230.

Estimated average hours per response: 10 hours.

Estimated Annual reporting hours: 9,200 hours.

General Description of Report

This information collection is mandatory: 12 U.S.C. 3105 and 3108 for the Board of Governors of the Federal Reserve System; sections 7 and 10 of the Federal Deposit Insurance Act (12 U.S.C. 1817, 1820) for the Federal Deposit Insurance Corporation; and the National Bank Act (12 U.S.C. 161) for the Office of the Comptroller of the Currency). This information collection is given confidential treatment. (5 U.S.C. 552(b)(8)). Small businesses (that is, small U.S. branches and agencies of foreign banks) are affected.

Abstract

All individual U.S. branches and agencies of foreign banks that have more than $30 million in direct claims on residents of foreign countries must file the FFIEC 019 report quarterly. Currently, all respondents report adjusted exposure amounts to the five largest countries having at least $20 million in total adjusted exposure. The Agencies collect this data to monitor the extent to which such branches and agencies are pursuing prudent country risk diversification policies and limiting potential liquidity pressures. No changes are proposed to the FFIEC 019 reporting form, however, minor clarifications are proposed to the instructions.

Current Actions

The instructional clarifications to the FFIEC 019 report that are the subject of this notice have been approved by the Agencies for implementation as of the September 30, 2000, report date. The proposed clarifications involve the treatment of credit derivatives as guarantees.

Request for Comment

Comments are invited on:

a. Whether the information collections are necessary for the proper performance of the agencies' functions, including whether the information has practical utility;

b. The accuracy of the agencies' estimates of the burden of the information collections, including the validity of the methodology and assumptions used;

c. Ways to enhance the quality, utility, and clarity of the information to be collected;

d. Ways to minimize the burden of information collections on respondents,

including through the use of automated collection techniques or other forms of information technology; and

e. Estimates of capital or start up costs and costs of operation, maintenance, and purchase of services to provide information.

Comments submitted in response to this notice will be shared among the agencies and will be summarized or included in the agencies' requests for OMB approval. All comments will become a matter of public record. Written comments should address the accuracy of the burden estimates and ways to minimize burden including the use of automated collection techniques or the use of other forms of information technology as well as other relevant aspects of the information collection request.

Board of Governors of the Federal Reserve System, May 16, 2000.

Jennifer J. Johnson,

Secretary of the Board.

[FR Doc. 00–12706 Filed 5–19–00; 8:45 am]

BILLING CODE 6210–01–P

FEDERAL RESERVE SYSTEM

Change in Bank Control Notices; Acquisitions of Shares of Banks or Bank Holding Companies

The notificants listed below have applied under the Change in Bank Control Act (12 U.S.C. 1817(j)) and § 225.41 of the Board's Regulation Y (12 CFR 225.41) to acquire a bank or bank holding company. The factors that are considered in acting on the notices are set forth in paragraph 7 of the Act (12 U.S.C. 1817(j)(7)).

The notices are available for immediate inspection at the Federal Reserve Bank indicated. The notices also will be available for inspection at the offices of the Board of Governors. Interested persons may express their views in writing to the Reserve Bank indicated for that notice or to the offices of the Board of Governors. Comments must be received not later than June 5, 2000.

A. Federal Reserve Bank of St. Louis (Randall C. Sumner, Vice President) 411 Locust Street, St. Louis, Missouri 63166–2034:

1. Ann Doolin Adcock, Dumas, Arkansas; to acquire additional voting shares of M & F Financial Corporation, Dumas, Arkansas, and thereby indirectly acquire additional voting shares of Merchants and Farmers Bank, Dumas, Arkansas.

Board of Governors of the Federal Reserve System, May 16, 2000.

Robert deV. Frierson,

Associate Secretary of the Board.

[FR Doc. 00–12707 Filed 5–19–00; 8:45 am]

BILLING CODE 6210–01–P

FEDERAL RESERVE SYSTEM

Formations of, Acquisitions by, and Mergers of Bank Holding Companies

The companies listed in this notice have applied to the Board for approval, pursuant to the Bank Holding Company Act of 1956 (12 U.S.C. 1841 *et seq.*) (BHC Act), Regulation Y (12 CFR part 225), and all other applicable statutes and regulations to become a bank holding company and/or to acquire the assets or the ownership of, control of, or the power to vote shares of a bank or bank holding company and all of the banks and nonbanking companies owned by the bank holding company, including the companies listed below.

The applications listed below, as well as other related filings required by the Board, are available for immediate inspection at the Federal Reserve Bank indicated. The application also will be available for inspection at the offices of the Board of Governors. Interested persons may express their views in writing on the standards enumerated in the BHC Act (12 U.S.C. 1842(c)). If the proposal also involves the acquisition of a nonbanking company, the review also includes whether the acquisition of the nonbanking company complies with the standards in section 4 of the BHC Act (12 U.S.C. 1843). Unless otherwise noted, nonbanking activities will be conducted throughout the United States. Additional information on all bank holding companies may be obtained from the National Information Center website at www.ffiec.gov/nic/.

Unless otherwise noted, comments regarding each of these applications must be received at the Reserve Bank indicated or the offices of the Board of Governors not later than June 15, 2000.

A. Federal Reserve Bank of Dallas (W. Arthur Tribble, Vice President) 2200 North Pearl Street, Dallas, Texas 75201–2272:

1. Northwest Bancorporation, Inc., Houston, Texas; to merge with Redstone Bancorporation, Inc., Houston, Texas, and thereby indirectly acquire Redstone Bank, N. A., Houston, Texas.

Board of Governors of the Federal Reserve System, May 16, 2000.

Robert deV. Frierson,

Associate Secretary of the Board.

[FR Doc. 00–12709 Filed 5–19–00; 8:45 am]

BILLING CODE 6210–01–P

FEDERAL RESERVE SYSTEM

Notice of Proposals To Engage in Permissible Nonbanking Activities or To Acquire Companies That Are Engaged in Permissible Nonbanking Activities

The companies listed in this notice have given notice under section 4 of the Bank Holding Company Act (12 U.S.C. 1843) (BHC Act) and Regulation Y, (12 CFR part 225) to engage de novo, or to acquire or control voting securities or assets of a company, including the companies listed below, that engages either directly or through a subsidiary or other company, in a nonbanking activity that is listed in § 225.28 of Regulation Y (12 CFR 225.28) or that the Board has determined by Order to be closely related to banking and permissible for bank holding companies. Unless otherwise noted, these activities will be conducted throughout the United States.

Each notice is available for inspection at the Federal Reserve Bank indicated. The notice also will be available for inspection at the offices of the Board of Governors. Interested persons may express their views in writing on the question whether the proposal complies with the standards of section 4 of the BHC Act. Additional information on all bank holding companies may be obtained from the National Information Center website at www.ffiec.gov/nic/.

Unless otherwise noted, comments regarding the applications must be received at the Reserve Bank indicated or the offices of the Board of Governors not later than June 5, 2000.

A. Federal Reserve Bank of New York (Betsy Buttrill White, Senior Vice President) 33 Liberty Street, New York, New York 10045–0001:

1. National Bank of Greece, S.A., Athens, Greece; to acquire NBG Asset Management Inc. and NBG Securities Inc., both of New York, New York, and thereby indirectly acquire through NBG International Limited, London, England, indirect control of Newbrook Group LLC, New Brook Capital Management, Inc., Newbrook Capital Management LLC, and Newbrook Securities LLC, and thereby engage in investment advisory activities, pursuant to § 225.28(b)(6) of Regulation Y; brokerage, riskless principal, and private placement activities, pursuant to §§ 225.28(b)(7)(i), (ii) and (iii) of Regulation Y, respectively; and private investment fund activities, including acting as a commodity pool operator for and controlling private investment funds that invest solely in assets that a bank holding company is permitted to hold

directly, see Travelers Group, Inc., and Citicorp, 84 Fed. Res. Bull. 985 (1998).

Board of Governors of the Federal Reserve System, May 16, 2000.

Robert deV. Frierson,

Associate Secretary of the Board.

[FR Doc. 00–12708 Filed 5–19–00; 8:45 am]

BILLING CODE 6210–01–P

FEDERAL TRADE COMMISSION

Children's Online Privacy Protection

AGENCY: Federal Trade Commission (FTC).

ACTION: Notice of opportunity to participate and obtain co-sponsorship in agency public awareness campaign.

SUMMARY: The FTC seeks to identify organizations interested in participating in the FTC's public awareness campaign concerning the Children's Online Privacy Protection Act and the FTC Rule that implements the Act. Participation by such organizations will involve the development and dissemination of informational materials co-sponsored by the FTC. Interested parties should submit a written statement explaining their interest and qualifications.

DATES: The FTC has not established a deadline, but it encourages interested organizations to submit the requested statement as early as possible.

FOR FURTHER INFORMATION CONTACT: Mr. Randy Satterfield, (202) 326–3407, Office of Consumer and Business Education, Bureau of Consumer Protection, FTC, 600 Pennsylvania Avenue, NW, Washington, DC 20580, or rsatterfield@ftc.gov.

SUPPLEMENTARY INFORMATION: Effective April 21, 2000, the Children's Online Privacy Protection Rule, 16 CFR Part 312, issued by the FTC to implement the Children's Online Privacy Protection Act (COPPA), 15 U.S.C. 6501 *et seq.*, prohibits unfair or deceptive acts or practices in connection with the collection, use, or disclosure of personally identifiable information from and about children on the Internet. The Commission voted to issue its final Rule on October 20, 1999, and the Rule was published at 64 FR 59888 (November 3, 1999).

To promote greater public awareness of the Rule and the COPPA, the FTC has initiated a Children's Online Privacy Protection Act Communications Campaign (''COPPA Communications Campaign''). The Campaign is designed to provide parents, guardians, youngsters, teachers, and other members of the public with information about privacy on the Internet and the law's protections. The Campaign will help parents understand the legal obligations of Web site operators under the COPPA as well as options that parents have for protecting their children's personal information. You can visit the Campaign's Web site at the following Internet address: www.ftc.gov/kidzprivacy.

The Commission believes that encouraging the active involvement of a wide variety of corporations, associations, organizations, and other entities in this effort will lead to a broad and effective educational campaign. Thus, as part of its Campaign, the FTC is seeking to foster the efforts of other public and private for-profit and non-profit organizations in the development and dissemination of informational materials about COPPA and the FTC's Rule, by allowing such organizations to list the FTC as a co-sponsor in connection with their materials, subject to FTC staff review and approval of such materials. (Interested organizations should note at the outset that this co-sponsorship program will not be funded or supported by agency grant, contract, or otherwise, so each organization is expected to bear its own costs of participation.)

The Commission requests that organizations interested in pursuing such co-sponsorship opportunities submit a written statement to the FTC contact listed above, describing the background and nature of the organization's interest or role in children's privacy and/or the Internet, and the organization's experience and expertise in developing and disseminating public information materials addressing those issues. The statement must also describe the organization's ability to reach the target audiences discussed above, including the organization's financial, managerial, and operational capacity and resources for the printing, production, and distribution of brochures or booklets, public service spots, videos, Web-based promotions, posters, flyers, advertising, etc. The statement must also include any other information that may be relevant, such as pertinent individual or organizational affiliations and the potential, if any, for apparent or actual conflicts of interest. In addition, the statement must expressly acknowledge the organization's understanding and agreement that FTC co-sponsorship, if any, of the organization's activities would not be funded or supported by agency grant, contract, or otherwise, would not create any financial or property right in any natural or artificial person, and would be subject to FTC review and approval of the public information materials or activities to be co-sponsored. Finally, an authorized representative of the organization must sign the statement. The FTC will consider the organization's statement and other information made available to or obtained by the agency in determining whether it should co-sponsor or continue to co-sponsor a particular organization's public information efforts.

By direction of the Commission.

Donald S. Clark,

Secretary.

[FR Doc. 00–12754 Filed 5–19–00; 8:45 am]

BILLING CODE 6750–01–P

DEPARTMENT OF HEALTH AND HUMAN SERVICES

Centers for Disease Control and Prevention

[30DAY–31–00]

Agency Forms Undergoing Paperwork Reduction Act Review

The Centers for Disease Control and Prevention (CDC) publishes a list of information collection requests under review by the Office of Management and Budget (OMB) in compliance with the Paperwork Reduction Act (44 U.S.C. Chapter 35). To request a copy of these requests, call the CDC Reports Clearance Officer at (404) 639–7090. Send written comments to CDC, Desk Officer; Human Resources and Housing Branch, New Executive Office Building, Room 10235; Washington, DC 20503. Written comments should be received within 30 days of this notice.

Proposed Projects

1. Evaluation of Viral Hepatitis Educational Materials—New—National Center for Infectious Disease (NCID). The purpose of the proposed study is to assess the usefulness of hepatitis educational materials developed and distributed by the Hepatitis Branch, CDC. Annually, 125,000—200,000 Americans are infected with hepatitis A virus (HAV) and results in approximately 100 deaths. The estimated cost associated with HAV infections is estimated at $200 million a year in medical care and lost work days. An estimated 1 million to 1.25 million Americans are chronically infected with hepatitis B virus (HBV) and 4,000 to 5,000 die each year due to resultant cirrhosis and liver cancer. The estimated cost associated with HBV infections is estimated at $700 million a year in medical care and lost work days. It is estimated that 3.9 million

Americans have been infected with hepatitis C virus (HCV), 2.7 million of which are chronically infected. Not including the cost of liver transplantation, the estimated cost associated with HCV infections is $600 million a year in medical care and lost work days.

The annual burden hours are estimated to be 2403.

Form name	Number of respondents	Number of responses/respondent	Avg. burden per responses (in hours)
Phone	20	1	10/60
Written	14400	1	10/60

Dated: May 16, 2000.

Nancy Cheal,

Acting Associate Director for Policy, Planning, and Evaluation, Centers for Disease Control and Prevention (CDC).

[FR Doc. 00–12739 Filed 5–19–00; 8:45 am]

BILLING CODE 4163–18–P

DEPARTMENT OF HEALTH AND HUMAN SERVICES

Centers for Disease Control and Prevention

[Program Announcement 00080]

Optimizing Strategies To Provide Sexually Transmitted Disease (STD) Partner Services; Notice of Availability of Funds

A. Purpose

The Centers for Disease Control and Prevention (CDC) announces the availability of fiscal year (FY) 2000 funds for a cooperative agreement research program for Optimizing Strategies to Provide STD Partner Services. CDC is committed to achieving the health promotion and disease prevention objective of ''Healthy People 2010'', a national activity to reduce morbidity and mortality and improve the quality of life. This announcement is related to the focus area(s) of Sexually Transmitted Diseases. For the conference copy of ''Healthy People 2010'', visit the Internet site: http://www.health.gov/healthypeople. The goal of this cooperative agreement research program is to develop and evaluate the delivery of cost-effective, innovative, and confidential approaches to providing effective partner services within a time frame that interrupts the chain of STD transmission. Partner services (PS) are a critical component of STD control and prevention in public health practice.

Initially, this process was named ''contact tracing,'' but was renamed ''partner notification'' in the past two decades. Three primary strategies for partner notification are described in the literature, although other variations are also employed. The most common strategies are patient referral (patients are encouraged to notify sexual partners); provider referral, (health care staff, traditionally in the health department, notify partners); or contract referral (a time limit is agreed upon for patient referral, after which provider referral is initiated). In this program announcement, ''partner services'' is used to describe the constellation of services that should be provided to the sexual partners of individuals in whom a sexually transmitted disease has been detected and treated.

The purpose of PS is to break the chain of infection and re-infection that can occur when a STD is treated in only a part of a sexual dyad or network. STDs are often asymptomatic, many infected individuals are unaware of their infection, thus symptom-driven patient presentation for diagnosis and treatment fails to reach many people with STDs. PS may shorten the duration of infection in many additional individuals by identifying, treating, and counseling the sex partners of patients with STDs. Furthermore, PS offers a unique opportunity to assist at-risk, infected and uninfected people to adopt safer behaviors that will enable them to remain STD-free and is a key component of public health practice. The objectives of partner services include identifying, locating, notifying, testing, treating, and providing counseling to reduce STD risk for the sex partners of an individual diagnosed with chlamydia, gonorrhea, syphilis, trichomoniasis, herpes, or human immunodeficiency virus (HIV).

Despite the importance of partner services in public health practice, relatively little scientific information is available on the impact on disease transmission or cost effectiveness of various approaches, particularly for STDs that are treated in the private sector. Another limitation of the current science base is that existing data on partner services has been generated from federal, state, and local public health programs that have a legal responsibility to provide PS. This information does not reflect partner services in other clinical settings where the majority of STD diagnosis and treatment take place. At least half of STD care is sought from private providers. Therefore, further research across the full spectrum of STD treatment providers with respect to PS is clearly needed. Current data from a national survey of providers suggests that the most common method of notification in the private sector is patient referral, although the rate of new infections uncovered in the private sector from this method is not known. Fewer than 5 percent of providers reported engaging in provider referral and less than 50 percent consistently reported patients' names to health departments after a diagnosis of chlamydia, gonorrhea, syphilis, or HIV infection. Case reporting from providers and from laboratories enables the local health department to provide partner services. However, providers may also diagnose and treat presumptively without performing a laboratory test, and relatively little is known about case reporting or partner services following presumptive treatment.

Provider-perceived barriers to offering partner services include concerns about negative effects on relationships with patients and their partners, lack of training and time for these activities, and lack of reimbursement.

Nevertheless, providers agreed that PS could promote appropriate behavior and attitude change, and reduce (re)infection rates. In summary, this survey confirmed that the effectiveness of PS in the private sector is unknown and reporting of names to agencies that conduct PS is limited.

Current methods of PS require substantial time and effort from public health staff, although data estimating the magnitude of the reduction in STD incidence or prevalence within communities that is attributable to PS are currently lacking. Recent advances in STD detection and treatment, information system hardware and software, and behavioral interventions offer an unprecedented opportunity to:

(1) Design and evaluate innovative strategies that increase the effectiveness of partner elicitation;

(2) Improve the timely connection of partners with appropriate detection, treatment, and counseling services;

(3) Intervene to lower STD risk among sex partners; and

(4) Evaluate the cost-effectiveness of new methods in comparison to current strategies.

This is likely to require complex evaluation that moves from the index patient to the patient-partner dyad, to sexual networks, and to community levels of evaluation.

CDC envisions that data from this research program will be used to design cost-effective strategies that

(a) Augment the effectiveness of PS in the public and private sectors;

(b) Reduce the incidence and the prevalence of curable STDs; and

(c) Utilize the opportunities inherent in partner services to lower partners' risk behaviors.

Incidence and prevalence reductions should be demonstrably attributable to innovations in PS.

This program has four general objectives:

1. To develop, apply, and evaluate confidential and innovative partner services across a variety of practice settings using new techniques or technologies and to assess their effectiveness and acceptability in comparison with current PS methods;

2. To develop and assess the feasibility of policy level interventions that may be needed to make innovative strategies feasible;

3. To assess the cost-effectiveness of proposed alternatives in comparison with current methods of partner services; and

4. To develop mathematical models that assess the impact of current and alternative partner service approaches on rates of incident and prevalent infections.

B. Eligible Applicants

Applications may be submitted by public and private nonprofit and for-profit organizations; governments and their agencies; that is, universities, colleges, research institutions, managed care organizations, hospitals; State and local governments or their bona fide agents; and federally recognized Indian tribal governments, Indian tribes, or Indian tribal organizations. Eligible applicants should collaborate with their local or state health department because this linkage is critical to the successful conduct of this research.

Note: Public Law 104–65 states that an organization described in section 501(c)(4) of the Internal Revenue Code of 1986 that engages in lobbying activities is not eligible to receive Federal funds constituting an award, grant, cooperative agreement, contract, loan, or any other form.

C. Availability of Funds

Approximately $750,000 is available in FY 2000 to fund the first year of approximately 2–3 awards. It is expected that the average award will be $250,000, ranging from $100,000 to $350,000. It is expected that the awards will begin by September 30, 2000 and will be made for a 12-month budget period for a maximum project period of four years. Funding estimates may change. Continuation awards within an approved project period will be based on satisfactory progress as evidenced by required reports and on the availability of funds.

Funding Preferences

Funding preference will be given:

1. To applicants with access to subjects in public and private settings where STDs are diagnosed and treated;

2. To achieve geographic distribution;

3. To applications that address more than one STD;

4. To applications that involve collaboration with health departments; and

5. To applications that incorporate a mix of provider settings where chlamydia, gonorrhea, syphilis, trichomoniasis, herpes, or human immunodeficiency virus (HIV) are detected and treated.

Collaborative partnerships are strongly encouraged with managed care organizations, private practice settings, family planning clinics, or community and migrant health centers in addition to traditional public STD clinics.

D. Program Requirements

In conducting activities to achieve the purpose of this program, the recipient will be responsible for the activities under 1. (Recipient Activities), and CDC will be responsible for the activities listed under 2. (CDC Activities).

1. Recipient Activities

a. Design and conduct research to address the study question(s) as listed below. Applicants may address one or more of the study questions listed and are encouraged to address at least two.

Study Questions

(1) In comparison to current strategies, what innovative methods can be developed and evaluated to increase the timeliness, effectiveness, and cost-effectiveness of partner services across a variety of practice settings?

PS interventions should be tailored to patient, partner, or provider characteristics, to specific STDs, and to different practice settings in order to produce the most effective partner services. It is also important to assess methods that increase patient's cooperation, recall, and accuracy with respect to (a) providing names and locating information for partners or (b) following through with patient referral. Evaluation of the barriers that inhibit patients from naming partners or delivering patient referral in conjunction with interventions that overcome those barriers and increase the proportion of partners who receive medical evaluation, treatment, and counseling are encouraged. Development and evaluation of strategies that promote the timely and appropriate delivery of partner services are encouraged. There is also interest in identifying methods for delivering partner services that promote changes in partners' risk behaviors and how this may vary by whether or not the exposed partner had acquired an STD.

For new strategies, techniques, or technologies, identify how they can be implemented in public and private health care settings. Evaluations should address to what extent and how the use of the new technologies or techniques increase the productivity of staff and reduce the barriers to timely and effective partner services for staff, patients, and partners.

Finally, there is programmatic interest in assessing the cost-effectiveness of innovative strategies, new techniques, and new technologies. Such interest includes accurately determining the incremental cost of identifying and locating partners and infections using innovative strategies and their comparison with the cost of current strategies. Cost-effectiveness measures should include research, training, and program costs separately so that implementation can be examined independently of research costs.

Applications that combine some or all of the above elements are encouraged. Preference will be given to applications that:

(a) Propose the development, implementation, and evaluation of innovative strategies;

(b) Present a detailed plan for measuring and evaluating outcomes;

(c) Will be able to identify which elements of a proposed strategy account for its effectiveness;

(d) Make the incremental value of the strategy visible; and

(e) Incorporate technology transfer to settings where STDs are diagnosed and treated.

(f) Compare proposed innovative strategies with traditional methods of partner services and clarify whether

these new techniques or technologies offer any added value to current partner service activities.

(2) What policy level interventions can be developed, implemented, and evaluated to promote partner services across a broad spectrum of health care settings?

This may include identification of the policy sources, their policy function (advisory, regulatory, implementation), and the introduction and evaluation of policy-level changes that promote the improved delivery of partner services. There is interest in funding interventions that can produce the necessary policy changes, including linking the process of such interventions with specific outcomes (*e.g.,* policy changes in health care plans that make partner services reimbursable).

(3) Apply mathematical models to assess the impact of current and alternative partner service approaches on rates of incident and prevalent infections?

The application of mathematical models to assess which current strategies and proposed alternatives may be most valuable in increasing the timeliness and effectiveness of partner services are also encouraged. Consideration will be given to the use of existing databases. The use of cost-effectiveness data as part of a model (or series of models) is encouraged.

b. Evaluate and analyze the research data.

c. Disseminate study findings through presentations at scientific meetings and publications in peer-reviewed journals.

2. CDC Activities

A cooperative agreement reflects an assistance relationship between the Federal Government and the recipient in which substantial programmatic involvement is anticipated about the scientific or technical management of an activity during its performance. The CDC program office will:

a. Provide up-to date scientific information, technical assistance, and guidance in the design and conduct of the research.

b. As needed, assist in the development of a research protocol for local IRB review at cooperating institutions participating in the research project. The CDC IRB will review and approve the protocol initially and on at least an annual basis until the research project is completed.

c. As needed, assist in data analysis and the preparation of manuscripts.

d. Convene meetings of all grantees for the exchange of information.

E. Application Content

Applications must be developed in accordance with the information contained in this program announcement, the PHS 398 Grant Application, and the instructions provided in this section. Your application will be evaluated on the criteria listed, so it is important to follow them in laying out your program plan.

Instructions

The program narrative for sections 1–5 below should be no more than 25 single-spaced pages, printed on one side, with one-inch margins, and 10 or 12 cpi typeface. All pages, including appendices, should be numbered sequentially. The narrative must contain the following sections in the order presented below:

1. Abstract: Provide a brief abstract of the project. The abstract must reflect the project's focus and the length of the project period (maximum is 4 years) for which assistance is being requested (see ''Availability of Funds'' for additional information).

2. Specific Aims: List the broad, long-term objectives and what the specific research proposed in this application is intended to accomplish. State the hypotheses to be tested. One page is recommended.

3. Background and Significance: Briefly sketch the background leading to the present application, critically evaluate existing knowledge, and specifically identify the gaps which the project is intended to fill. State concisely the importance and health relevance of the research described in this application by relating the specific aims to the broad, long-term objections. Two to three pages are recommended.

4. Preliminary Studies: Use this section to provide an account of the principal investigator/program director's preliminary studies pertinent to the application information that will help to establish the experience and competence of the investigator to pursue the proposed project. The complete references to appropriate publications and manuscripts submitted or accepted for publication may be listed and are not part of the page limitations. Five collated sets of no more than 10 such items of background material may be submitted in an appendix. Six to eight pages are recommended for the narrative portion of the Preliminary Studies section.

5. Research Design and Methods: Describe the research design and the procedures to be used to accomplish the specific aims of the project. Include how the data will be collected, analyzed, and interpreted. Describe any new methodology and its advantage over existing methodologies. Discuss the potential difficulties and limitations of the proposed procedures and alternative approaches to achieve the aims. As part of this section, provide a tentative sequence or timetable for the project. Describe specific study protocols or plans for the development of study protocols. Describe the nature and extent of collaboration with CDC and/or others during various phases of the project. Describe in detail a plan for evaluating study results and for evaluating progress toward achieving project objectives.

6. Inclusion of Racial and Ethnic Populations: Describe the degree to which applicant will meet requirements regarding the inclusion of women, and members of minority groups in the proposed study.

7. Human Subject Involvement: Describe procedures that will provide for the protection of human subjects. Address how these procedures are in compliance with Federal regulations.

F. Submission and Deadline

Letter of Intent (LOI)

For planning purposes, a letter of intent to apply is requested and needed to staff the review panels, but not required, from potential applicants. Your letter of intent should include the following information: Program Announcement Number [00080], name and address of institution; name address, and telephone number of contact person; and specific objectives to be addressed by the proposed project.

The letter of intent must be submitted on or before June 12, 2000 to the Grants Management Specialist identified in the ''Where to Obtain Additional Information'' section of this announcement.

Application

Applicants should submit five copies of PHS–398 (OMB Number 0925–0001) and adhere to the instructions on the Errata Instruction Sheet for PHS 398.

Forms are available at the following Internet address: www.cdc.gov/...Forms, or in the application kit. On or before July 14, 2000 submit the application to the Grants Management Specialist identified in the ''Where to Obtain Additional Information'' section of this announcement.

Deadline: Applications shall be considered as meeting the deadline if they are either:

(a) Received on or before the deadline date; or

(b) Sent on or before the deadline date and received in time for distribution to the review panel. (Applicants must request a legibly dated U.S. Postal Service postmark or obtain a legibly dated receipt from a commercial carrier or U.S. Postal Service. Private metered postmarks shall not be acceptable as proof of timely mailing.)

Late Applications: Applications, which do not meet the criteria in (a) or (b) above, are considered late applications, will not be considered, and will be returned to the applicant.

G. Evaluation Criteria

Upon receipt, applications will be reviewed by CDC for completeness and responsiveness to the purpose of this request for applications (RFA) (as described in Section A), and as outlined under Eligible Applicants and Program Requirements (Items A to B). Incomplete applications and applications that are not responsive will be returned to the applicant without further consideration. It is important that the applicant's abstract reflects the project's focus, because the abstract will be used to help determine the responsiveness of the application.

All proposals will be independently reviewed for scientific merit by no less than three reviewers with appropriate expertise using current National Institutes of Health (NIH) review criteria to evaluate the methods and scientific quality of the proposal. Factors to be considered will include:

1. The specific aims of the research project, *i.e.,* the intended accomplishment of the specific research proposal, and the hypothesis to be tested. (5 percent)

2. The background of the proposal, i.e., the basis for the present proposal, the critical evaluation of existing knowledge, and identification of specific knowledge gaps which the proposal is intended to fill. (10 percent)

3. The significance and innovation from scientific and programmatic standpoints of the proposed research, including the adequacy of the theoretical and conceptual framework for the research. (20 percent)

4. The adequacy of the proposed research design, approaches, and methodology to carry out the research, including quality assurance procedures, plan for data management, statistical analysis plan, and evaluation plan. (40 percent)

5. The extent to which the research will lead to feasible, cost-effective interventions. (10 percent)

6. Qualifications and appropriateness of the proposed personnel to accomplish the proposed activities as well as the degree of commitment and cooperation of proposed collaborators and organizations (as evidenced by letters detailing the nature and extent of the involvement). (10 percent)

7. Research Capacity—adequacy of existing and proposed facilities and resources. (5 percent)

8. Gender and minority issues. Does the application include:

a. The proposed plan for the inclusion of both sexes and racial and ethnic minority populations for appropriate representation.

b. The proposed justification when representation is limited or absent.

c. A statement as to whether the design of the study is adequate to measure differences when warranted.

d. A statement as to whether the plans for recruitment and outreach for study participants include the process of establishing partnerships with community(ies) and recognition of mutual benefits.

9. Human Subjects—What are the strategies for the recruitment and retention of human subjects? Are the procedures proposed adequate for the protection of human subjects and are they fully documented? Are all procedures in compliance with applicable published regulations and 45 CFR 46?

10. The reasonableness of the proposed budget to the proposed research and demonstration program. Applications that propose to address more than one of the study questions described in Section D: Program Requirements should include a separate budget breakdown for each study question to be addressed.

Final awards will be determined by the Director of the Division of STD Prevention (DSTD) based on priority scores assigned by the independent review group appointed by CDC, consultation with DSTD senior staff, the match between the proposal and the program announcement, the relevance and balance of proposed research relative to DSTD priorities, and the availability of funds.

H. Other Requirements

Technical Reporting Requirements

Provide CDC with an original plus two copies of:

1. Progress reports annually, no later than 90 days after the end of the budget period;

2. Financial status report, no later than 90 days after the end of the budget period; and

3. Final financial and performance reports, no more than 90 days after the end of the project period.

Send all reports to the Grants Management Specialist identified in the ''Where to Obtain Additional Information'' section of this announcement.

Additional Requirements

The following additional requirements are applicable to this program. For a complete description of each, see Attachment I in the application kit.

AR–1 Human Subjects Requirements
AR–2 Requirements for Inclusion of Women and Racial and Ethnic Minorities in Research
AR–7 Executive Order 12372 Review
AR–8 Public Health System Reporting Requirements
AR–9 Paperwork Reduction Act Requirements
AR–10 Smoke-Free Workplace Requirements
AR–11 Healthy People 2010
AR–12 Lobbying Restrictions
AR–14 Accounting System Requirements
AR–21 Small, Minority, And Women-owned Business

I. Authority and Catalog of Federal Domestic Assistance Number

This program is authorized under section 318 of the Public Health Service Act, [42 U.S.C. Section 247c, as amended. The Catalog of Federal Domestic Assistance Number is 93.978.

J. Where To Obtain Additional Information

To receive additional written information and to request an application kit, call 1–888–GRANTS4 (1–888 472–6874). You will be asked to leave you name and address and will be instructed to identify the Announcement number of interest.

To obtain additional information, contact: Kang W. Lee, Grants Management Specialist, Procurement and Grants Office, Grants Management Branch, Centers for Disease Control and Prevention, Room 3000, 2920 Brandywine Road, Atlanta, GA 30341–4146; Telephone number (770) 488–2733; FAX number (770) 488–2847; Email address kil8@cdc.gov.

See also the CDC home page on the Internet: http://www.cdc.gov.

For program technical assistance, contact: Janet S. St. Lawrence, Division of STD Prevention, Centers for Disease Control and Prevention (CDC), Mail Stop E44, 1600 Clifton Road NE, Atlanta, GA 30333, (404) 639–8298; FAX: (404) 639–8622; Email address: nzs4@cdc.gov.

Dated: May 16, 2000.

John L. Williams,

Director, Procurement and Grants Office, Centers for Disease Control and Prevention (CDC).

[FR Doc. 00–12742 Filed 5–17–00; 8:45 am]

BILLING CODE 4163–18–P

DEPARTMENT OF HEALTH AND HUMAN SERVICES

Centers for Disease Control and Prevention

[Program Announcement 00072]

Project CHOICES Efficacy Study; Notice of Availability of Funds

A. Purpose

The Centers for Disease Control and Prevention (CDC) announces the availability of fiscal year (FY) 2000 funds for a cooperative agreement program for Project CHOICES (Changing High-risk AlcOhol Use and Increasing Contraception Effectiveness Study) Efficacy Study. The purpose of the study is to establish efficacy of Project CHOICES, a behavioral intervention approach to reducing alcohol-exposed pregnancies, in a multi-site, randomized clinical trial. Project CHOICES targets non-pregnant women at high risk for an alcohol-exposed pregnancy with a dual focused intervention aimed at reducing risk drinking and engaging in effective contraception until risk drinking is resolved. High-risk women will be accessed in high prevalence, community-based settings. CDC is committed to achieving the health promotion and disease prevention objectives of ''Healthy People 2010,'' a national activity to reduce morbidity and morality and improve the quality of life.

This announcement is related to the focus areas of Substance Abuse: Alcohol and Other Drugs; and Maternal, Infant, and Child Health. For the conference copy of ''Healthy People 2010,'' visit the internet site: ≤http://www.health.gov/healthypeople>

B. Eligible Applicants

Eligible applicants are limited to those previously funded under Program Announcement No. 746: Nova Southeastern University, The University of Texas—Houston, and Virginia Commonwealth University.

These applicants have been funded by CDC since 1997 to develop and implement the Project CHOICES Feasibility Study. This new cooperative agreement would allow the grantees to implement the study as a clinical trial.

Note: Public Law 104–65 states that an organization described in section 501(c)(4) of the Internal Revenue Code of 1986 that engages in lobbying activities is not eligible to receive Federal funds constituting an award, grant, cooperative agreement, contract, loan, or any other form.

C. Availability of Funds

Approximately $900,000 is available in FY 2000 to fund approximately 3 awards. It is expected that the average award will be $300,000, ranging from $250,000 to $350,000. It is expected that the awards will begin on or about September 30, 2000, and will be made for a 12-month budget period within a project period of up to 3 years. Funding estimates may change.

Continuation awards within an approved project period will be made on the basis of satisfactory progress as evidenced by required reports and the availability of funds.

D. Program Requirements

Project CHOICES targets non-pregnant, fertile women, 18–44 years of age, who are moderate to heavy alcohol consumers. Potentially high prevalence populations of targeted women have been defined from previous studies, including the Project CHOICES Feasibility Study which is currently underway. Applicants must select from the following list of high prevalence populations two settings in which they will conduct the Project CHOICES Efficacy Study: A jail; an alcohol and drug treatment center; an Obstetrical-Gynecological clinic; a Sexually Transmitted Disease (STD) Clinic; a media-recruited population of high-risk women; a Women, Infants, and Children (WIC) clinic; or an HMO. Applicants will then implement a behavior intervention protocol drawn from the Project CHOICES Feasibility study in two selected settings. Applicants must demonstrate the ability to maintain a minimum of 200 women from each selected setting (to be equally randomized to experimental and control groups) in the clinical study.

In conducting activities to achieve the purpose of this program, the recipient will be responsible for the activities under 1. (Recipient Activities), and CDC will be responsible for the activities listed under 2. (CDC Activities).

1. Recipient Activities

a. Refine Project CHOICES protocol and implement as a clinical trial in two diverse settings.

b. Recruit and train staff in a timely manner to ensure study implementation within the 3-year project period.

c. Implement appropriate quality assurance procedures to assure that protocols for the efficacy study are being properly implemented.

d. Develop manuscripts and presentations describing the Project CHOICES Efficacy Study, results and recommendations.

2. CDC Activities

a. Assist in the development of a research protocol for Institutional Review Board (IRB) review by all cooperating institutions participating in the research project.

b. The CDC IRB will review and approve the protocol initially and on at least an annual basis until the research project is completed.

c. Assist in the overall coordination of the implementation and evaluation of the intervention protocol.

d. Provide current scientific information, and ensure adherence to appropriate scientific standards including human subject regulations.

E. Application Content

Applications

Use the information in the Program Requirements, Other Requirements, and Evaluation Criteria sections to develop the application content. Your application will be evaluated on the criteria listed, so it is important to follow them in laying out the program plan. The narrative should be no more than 25 double-spaced pages (excluding attachments), printed on one side, with one inch margins, and unreduced font. Do not include any spiral or bound materials or pamphlets.

Program Narrative (not to exceed 25 pages):

The Program narrative should follow the PHS–398 (Rev. 4/98) application and Errata sheet, and should include the following information:

1. A demonstrated understanding of the problem of FAS and other prenatal alcohol-related conditions, and the role of brief intervention and treatment approaches to preventing these disorders; a justification of the need for the proposed study and the grantee's rationale for targeting the two selected settings as ones in which high prevalence populations of women at risk for a alcohol-exposed pregnancy can be accessed; and a description of how this study addresses Health People 2010 Objectives and the recommendations of the Institute of Medicine report: Fetal Alcohol Syndrome: Diagnosis, Epidemiology, Prevention and Treatment.

2. Specific, measurable, and time-framed objectives.

3. A detailed plan describing the approach to be taken in implementing

the study and the methods by which the objectives will be achieved and evaluated, including their sequence. A comprehensive evaluation plan must be outlined.

4. A description of the cooperative agreement's principal investigator's role and responsibilities.

5. A description of all the project staff regardless of their funding source. It should include their title, qualifications, experience, percentage of time each will devote to the study, as well as that portion of their salary to be paid by the cooperative agreement.

6. A description of the involvement of other entities that will relate to the proposed project, (*i.e.* recruitment settings), and letters of support as appropriate.

7. A detailed first year's budget for the cooperative agreement with future annual projections, if relevant. Awards will be made for a project period of up to three years.

An applicant organization has the option of having specific salary and fringe benefit amounts for individuals omitted from the copies of the application which are made available to outside reviewing groups. To exercise this option: on the original and five copies of the application, the applicant must use ''asterisks'' to indicate those individuals for whom salaries and fringe benefits are not shown; the salaries and fringe benefits subtotals must still be shown. In addition, the applicant must submit an additional copy of page four (Form PHS–398), completed in full, with the asterisks replaced by the salaries and fringe benefits. This budget page will be reserved for internal staff use only.

F. Submission and Deadline

Application

Submit the original and 5 copies of PHS 398 (OMB Number 0925–0001). Adhere to the instructions on the Errata Instruction Sheet for PHS–398. Forms are available at the following Internet address: www.cdc.gov, or in the application kit.

On or before July 17, 2000, submit the application to the Grants Management Specialist identified in the ''Where to Obtain Additional Information'' section of this announcement.

Deadline: Applications shall be considered as meeting the deadline if they are either:

(a) Received on or before the deadline date; or

(b) Sent on or before the deadline date and received in time for submission to the independent review group. (Applicants must request a legibly dated U.S. Postal Service postmark or obtain a legibly dated receipt from a commercial carrier or U.S. Postal Service. Private metered postmarks shall not be acceptable as proof of timely mailing.)

Late Applications: Applications which do not meet the criteria in (a) or (b) above are considered late applications, will not be considered, and will be returned to the applicant.

G. Evaluation Criteria

Each application will be evaluated individually against the following criteria by an independent review group appointed by CDC.

1. *Applicant's Understanding of the Problem* (10 percent): The extent to which the applicant demonstrates an understanding of the problem of FAS and other alcohol-related birth defects, alcohol use patterns of childbearing-age women, and the maternal risk factors which contribute to harmful alcohol use during pregnancy. Also, a demonstrated understanding of the process of changing alcohol use behavior and of why pregnancy postponement is an important strategy for preventing alcohol-exposed pregnancies.

2. *Goals and Objectives* (15 percent): The extent to which the study goals are clearly stated and the objectives are specific, measurable, and time-phased. Also, the extent to which a plan is presented for evaluating the objectives.

3. *Description of the Target Population and Outline of Approach* (20 percent): The extent to which the applicant has provided a full and comprehensive description of the target population, including available statistics which provide reasonable justification for designating the group targeted as high risk for an alcohol-exposed pregnancy.

4. *Plan of Operation* (25 percent): The extent to which the applicant has provided an overall description of the approach to be taken in conducting the intervention trial. The applicant's description of its methods for alcohol assessment, counseling and referral for problem drinking, and provision of family planning services to high-risk clients. Applicant must also provide adequate demonstration of its ability to access a study population of at least 600 high-risk women annually, and to follow a cohort of 200 high-risk women for intervention activities.

Also to be evaluated under this section is the degree to which the applicant has met the CDC Policy requirements regarding the inclusion of women, ethnic, and racial groups in the proposed research. This includes:

(a) The proposed plan for the inclusion of women and racial and ethnic minority populations for appropriate representation;

(b) The proposed justification when representation is limited or absent;

(c) A statement as to whether the design of the study is adequate to measure differences when warranted; and

(d) A statement as to whether the plans for recruitment and outreach for study participants include the process of establishing partnerships with community(ies) and recognition of mutual benefits.

5. *Capacity to Conduct Project Activities and Begin Study Operations in a Timely Fashion* (30 percent): The extent to which the applicant has provided information to support its ability to conduct the activities of the cooperative agreement including documentation of previous research experience in behavioral science research focusing on women's health issues, and/or addictive disorders; documentation of institutional support for the project; demonstrated ability to identify qualified personnel to fill key positions (including principal investigator, project coordinator, and intervention coordinator) and begin study activities in a timely fashion; and a description of how space required for the study will be acquired or designated.

6. *Budget Justification and Adequacy of Facilities* (not scored): The budget will be evaluated for the extent to which it is reasonable, clearly justified, and consistent with the intended use of the cooperative agreement funds. The applicant shall describe and indicate the availability of facilities and equipment necessary to carry out this project.

7. *Human Subjects Review* (not scored): Does the application adequately address the requirements of Title 45 CFR Part 46 for the protection of human subjects?

H. Other Requirements

Technical Reporting Requirements

Provide CDC with original plus two copies of:

1. Semiannual progress reports;

2. Financial status report, no more than 90 days after the end of the budget period; and

3. Final financial and performance reports, no more than 90 days after the end of the project period.

Send all reports to the Grants Management Specialist identified in the ''Where to Obtain Additional Information'' section of this announcement.

The following additional requirements are applicable to this program. For a complete description of each, see Attachment 1 in the application kit.

AR–1 Human Subjects Requirements

AR–2 Requirements for Inclusion of Women and Racial and Ethnic Minorities in Research

AR–9 Paperwork Reduction Act Requirements

AR–10 Smoke-Free Workplace Requirements

AR–11 Healthy People 2010

AR–12 Lobbying Restrictions

I. Authority and Catalog of Federal Domestic Assistance Number

This program is authorized under sections 301 and 317 of the Public Health Service Act, 42 U.S.C. sections 241 and 247b, as amended. The Catalog of Federal Domestic Assistance number is 93.283.

J. Where To Obtain Additional Information

This and other funding opportunities may be found on the CDC home page on the Internet: http://www.cdc.gov.

To receive additional written information and to request an application kit, call 1–888-GRANTS4 (1–888–472–6874). You will be asked to leave your name and address and will be instructed to identify the Announcement number of interest.

If you have questions after reviewing the contents of all the documents, business management technical assistance may be obtained from:

William Paradies, Grants Management Specialist, Grants Management Branch, Procurement and Grants Office, Centers for Disease Control and Prevention (CDC), 2920 Brandywine Road, Room 3000, Atlanta, GA 30341–4146; Telephone number: (770) 488–2721; Email address: wep2@cdc.gov.

For program technical assistance, contact:

Dr. Louise Floyd, (770) 488–7370, Email address: rlf3@cdc.gov .

OR

Connie Granoff, (770) 488–7513, Email address: clg4@cdc.gov. Division of Birth Defects, Child Development, and Disability and Health, National Center for Environmental Health, Centers for Disease Control and Prevention 4770 Buford Highway, (F–49), Atlanta, Georgia 30341–3724.

Dated: May 16, 2000.

John L. Williams,

Director, Procurement and Grants Office, Centers for Disease Control and Prevention (CDC).

[FR Doc. 00–12743 Filed 5–19–00; 8:45 am]

BILLING CODE 4163–18–P

DEPARTMENT OF HEALTH AND HUMAN SERVICES

Centers for Disease Control and Prevention

[Program Announcement 00094]

Cooperative Agreements for the Development of State-Based Birth Defects Surveillance Programs and the Use of the Surveillance Data for Public Health Programs; Notice of Availability of Funds

A. Purpose

The Centers for Disease Control and Prevention (CDC) announces the availability of fiscal year (FY) 2000 funds for a cooperative agreement program for developing and improving birth defects surveillance and using surveillance data to develop birth defects prevention programs and activities to improve the access of children born with birth defects to health services and early intervention programs. CDC is committed to achieving the health promotion and disease prevention objectives of ''Healthy People 2010'', a national activity to reduce morbidity and mortality and improve the quality of life. This announcement is related to the focus areas of Substance Abuse, Environmental Health, and Maternal, Infant, and Child Health. For the conference copy of ''Healthy People 2010'', visit the internet site: http://www.health.gov/healthypeople.

The purpose of the program is to support (1) the development, implementation, expansion, and evaluation of State based birth defects surveillance systems; (2) the development and implementation of State based programs to prevent birth defects; and (3) the development and implementation of activities to improve the access of children with birth defects to health services and early intervention programs.

B. Eligible Applicants

Applicants will be limited to those not currently involved in CDC Program Announcement 051 (Cooperative Agreements for Enhanced State-Based Birth Defects Surveillance and Use of Surveillance Data to Guide Prevention and Intervention Programs) and Program Announcement 643 (Centers of Excellence to Provide Surveillance, Research, Services, and Evaluation Aimed at Prevention of Birth Defects). See Attachment 1 for a list of the States funded under these program announcements.

Assistance will be provided only to the health departments of States or their bona fide agents, including the District of Columbia, the Commonwealth of Puerto Rico, the Virgin Islands, the Commonwealth of the Northern Mariana Islands, American Samoa, Guam, federally recognized Indian tribal governments, the Federated States of Micronesia, the Republic of the Marshall Islands, and the Republic of Palau. The eligible States are: Alabama, Alaska, Arizona, Connecticut, Delaware, Georgia, Idaho, Illinois, Indiana, Kansas, Louisiana, Maryland, Minnesota, Mississippi, Nebraska, North Dakota, Ohio, Oregon, Pennsylvania, Rhode Island, South Dakota, Tennessee, Vermont, Virginia, Washington, West Virginia, Wisconsin, and Wyoming. Applicants may apply under one of two categories:

Category 1—States/territories/tribes with no birth defects surveillance systems; or

Category 2—States/territories/tribes with newly implemented or ongoing surveillance systems.

In the cover letter to the application, please state the category (1 or 2) for which you are applying.

Note: Public Law 104–65 states that an organization described in section 501(c)(4) of the Internal Revenue Code of 1986 which engages in lobbying activities is not eligible to receive Federal funds constituting an award, grant, cooperative agreement, contract, loan, or any other form.

C. Availability of Funds

Approximately $800,000 is available in FY 2000 to fund approximately 3–6 awards in Category 1 and 3–6 awards in Category 2. It is expected that the average award will be $100,000, ranging from $50,000 to $150,000. The awards will begin on or about September 30, 2000, and will be made for a 12-month budget period within a project period of up to 3 years. Funding estimates may change.

Continuation awards within an approved project period will be made on the basis of satisfactory progress as evidenced by required reports and the availability of funds.

Use of Funds

These awards may be used for personnel services, equipment, travel, and other costs related to project activities. Project funds may not be used

to supplant State funds available for birth defects surveillance, prevention, health care services, patient care, construction, nor lease/purchase of facilities or space.

D. Program Requirements

In conducting activities to achieve the purpose of this program, Category 1 recipients will be responsible for the activities under 1. Recipient activities for States with no birth defects surveillance systems; Category 2 recipients will be responsible for the activities under 2. Recipient activities for States with newly implemented or ongoing surveillance systems; and CDC will be responsible for the activities under 3. CDC activities.

1. Category 1—Recipient Activities for States with no birth defects surveillance systems:

a. Develop and begin implementation of a State based surveillance system to ascertain cases and generate timely population-based data of major birth defects occurring in the State.

b. Analyze the surveillance data generated by the system in a timely fashion including rates and trends of major birth defects.

c. Disseminate data and collaborate with appropriate organizations within the State and with other States.

d. Develop and implement a plan to evaluate the surveillance methodology used.

e. Develop a plan and begin implementation of a birth defects prevention program (*e.g.* Neural Tube Defects (NTD) occurrence prevention), and/or develop a plan and begin implementation of activities to improve the access of children with birth defects to comprehensive, community-based, family-centered care.

f. Develop a plan to evaluate the intervention or prevention activities.

2. Category 2—Recipient Activities for States with newly implemented or ongoing surveillance systems:

a. Broaden methodologies and approaches which will improve, sustain, and expand the capacity of the existing State based surveillance system to ascertain cases and generate timely population-based data of major birth defects occurring in the State.

b. Analyze the surveillance data generated by the system in a timely fashion including rates and trends of major birth defects.

c. Disseminate data and collaborate with appropriate organizations within the State and with other States.

d. Develop and implement a plan to evaluate the surveillance methodology used.

e. Develop a plan and begin implementation of a birth defects prevention program (*e.g.*, Neural Tube Defects [NTD] occurrence prevention), and/or develop a plan and begin implementation of activities to improve the access of children with birth defects to comprehensive, community-based, family-centered care.

f. Develop a plan to evaluate the intervention or prevention activities.

3. CDC Activities.

a. Assist, if requested, in designing, developing, and evaluating methodologies and approaches used for State based birth defects surveillance.

b. Assist, if requested, in analyzing surveillance data related to birth defects.

c. Assist, if requested, in designing plans for prevention programs and plans to improve the access of children with birth defects to health services and intervention programs.

d. Provide, if requested, a reference point for sharing regional and national data and information pertinent to the surveillance and prevention of birth defects.

E. Application Content

Use the information in the Program Requirements, Other Requirements, and Evaluation Criteria sections to develop the application content. Your application will be evaluated on the criteria listed, so it is important to follow them in describing the program plan.

The applicant should provide a detailed description of first-year activities and briefly describe future-year objectives and activities. The application must contain the following:

1. Cover Letter: A one page cover letter should indicate whether the applicant is applying for Category 1 or Category 2.

2. A one-page, single-spaced, typed abstract in 12 point font must be submitted with the application. The heading should include the title of the grant program, project title, organization, name and address, project director and telephone number. The abstract should clearly state which option the applicant is applying for: Category 1 or Category 2. The abstract should briefly summarize the program for which funds are requested, the activities to be undertaken, and the applicant's organization structure. The abstract should precede the Program Narrative. A table of contents that provides page numbers for each of the following sections should be included. All pages must be numbered.

3. Narrative: The narrative should be no more than 20 double-spaced pages printed on one side, with one inch margins, and unreduced font (12 pitch). The required detailed budget and detailed budget justification are not considered to be part of the Program Narrative. The narrative must contain the following sections:

a. Understanding the Problem and Current Status;

b. Impact on State based Birth Defects Surveillance;

c. Use of Surveillance Data for Prevention and Intervention;

d. Organizational and Program Personnel Capability;

e. Human Subjects Review;

4. Budget and Budget Justification—Provide a detailed budget which indicates the anticipated costs for personnel, fringe benefits, travel, supplies, contractual, consultants, equipment, indirect, and other items.

F. Submission and Deadline

Submit the original and two copies of PHS 5161–1 (OMB Number 0937–0189). On or before July 20, 2000, submit the application to the Grants Management Specialist identified in the ''Where to Obtain Additional Information'' section of this announcement. Forms are available at the following Internet address: www.cdc.gov/od/pgo/forminfo.htm or in the application kit.

Deadline: Applications shall be considered as meeting the deadline if they are either:

(a) Received on or before the deadline date; or

(b) Sent on or before the deadline date and received in time for submission to the independent review group. (Applicants must request a legibly dated U.S. Postal Service postmark or obtain a legibly dated receipt from a commercial carrier or U.S. Postal Service. Private metered postmarks shall not be acceptable as proof of timely mailing.)

Late Applications: Applications which do not meet the criteria in (a) or (b) above are considered late applications, will not be considered, and will be returned to the applicant.

G. Evaluation Criteria

Each application will be evaluated individually against the following criteria by an independent review group appointed by CDC.

1. Applicant's understanding of the problem (10 percent):

The extent to which the applicant has a clear, concise understanding of the requirements, objectives, and purpose of the cooperative agreement. The extent to which the application reflects an understanding of the purpose and complexities of birth defects surveillance as it relates to their State.

2. Impact on State based birth defects surveillance (35 percent):

The extent to which the applicant describes the anticipated level of impact this cooperative agreement will have on birth defects surveillance activities in the State. The current and proposed activities evaluated in this element are specific for Category 1 and Category 2.

a. Evaluation criteria for category 1 (States with no birth defects surveillance systems):

(1) Plans for developing State based birth defects surveillance;

(2) Methods of case ascertainment;

(3) Timeliness of case ascertainment;

(4) Level of coverage of the population;

(5) Specific birth defects ascertained; and

(6) Plans for analyzing and reporting surveillance data to appropriate State, local, and federal health officials.

b. Evaluation criteria for category 2 (States with newly implemented or ongoing birth defects surveillance systems):

(1) Plans for improving/expanding State based birth defects surveillance;

(2) Methods of case ascertainment;

(3) Timeliness of case ascertainment;

(4) Level of coverage of the population;

(5) Specific birth defects ascertained;

(6) Plans for analyzing and reporting surveillance data to appropriate State, local, and federal health officials.

Also included in this criteria is the degree to which the applicant has met the CDC Policy requirements regarding the inclusion of women, ethnic, and racial groups in the proposed research. This includes:

1. The proposed plan for the inclusion of both sexes and racial and ethnic minority populations for appropriate representation.

2. The proposed justification when representation is limited or absent.

3. A statement as to whether the design of the study is adequate to measure differences when warranted.

4. A statement as to whether the plans for recruitment and outreach for study participants include the process of establishing partnerships with community(ies) and recognition of mutual benefits.

3. Use of the surveillance data for prevention and intervention (35 percent):

The extent to which the applicant describes the plans for using surveillance data to develop and implement programs to prevent birth defects and/or activities to improve the access of children with birth defects to health services and early interventions.

a. Develop a plan for working with appropriate partners in the State to develop prevention or intervention programs.

b. Describe methods or a plan for sharing surveillance data with programs or agencies that will use the data for prevention or intervention.

4. Organizational and program personnel capability (20 percent):

The extent to which the applicant has the experience, skills, and ability to develop and improve birth defects surveillance and use surveillance data to develop prevention or intervention programs. The adequacy of the present staff and capability to assemble competent staff to implement a birth defects surveillance system and develop programs for prevention or intervention. To the extent possible, the applicant shall identify all current and potential personnel who will work on this cooperative agreement including qualifications and specific experience as it relates to the requirements set forth in this announcement.

5. Human Subjects Review (not scored):

Does the application adequately address the requirements of Title 45 CFR Part 46 for the protection of human subjects?

6. Budget justification and adequacy of facilities (not scored):

The budget will be evaluated for the extent to which it is reasonable, clearly justified, and consistent with the intended use of the cooperative agreement funds. The applicant shall describe and indicate the availability of facilities and equipment necessary to carry out this project.

H. Other Requirements

Technical Reporting Requirements

Provide CDC with original plus two copies of:

1. Semiannual progress reports;

2. Financial status report, no more than 90 days after the end of the budget period; and

3. Final financial status and performance reports, no more than 90 days after the end of the project period.

Send all reports to the Grants Management Specialist identified in the ''Where to Obtain Additional Information'' section of this announcement.

The following additional requirements are applicable to this program. For a complete description of each, see Attachment 2 in the application kit.

AR–1 Human Subjects Requirements

AR–2 Requirements for Inclusion of Women and Racial and Ethnic Minorities in Research

AR–7 Executive Order 12372 Review

AR–9 Paperwork Reduction Act Requirements

AR–10 Smoke-Free Workplace Requirements

AR–11 Healthy People 2010

AR–12 Lobbying Restrictions

I. Authority and Catalog of Federal Domestic Assistance Number

This program is authorized under sections 301(a), 311 and 317 (c) of the Public Health Service Act [42 U.S.C. 241(a), 243, and 247 (b–4)], as amended. The Catalog of Federal Domestic Assistance number is 93.283.

J. Where To Obtain Additional Information

For this and other CDC funding opportunities, refer to the CDC home page on the Internet: http://www.cdc.gov. To receive additional written information and to request an application kit, call 1–888–GRANTS4 (1–888–472–6874). You will be asked to leave your name and address and will be instructed to identify the Announcement number of interest.

If you have questions after reviewing the contents of all the documents, business management technical assistance may be obtained from: William A. Paradies, Grants Management Specialist, Grants Management Branch, Procurement and Grants Office, Centers for Disease Control and Prevention (CDC), 2920 Brandywine Road, Atlanta, GA 30341–4146, Telephone: (770) 488–2721, E-mail address: WParadies@cdc.gov

Programmatic technical assistance may be obtained from: Larry D. Edmonds, State Services, Birth Defects and Pediatric Genetics Branch, Division of Birth Defects, Child Development, Disability and Health, National Center for Environmental Health, Centers for Disease Control and Prevention (CDC), 4770 Buford Highway NE., Mailstop F–45, Atlanta, GA 30341–3724, Telephone: (770) 488–7170, E-mail address: LEdmonds@cdc.gov

Dated: May 16, 2000.

John L. Williams,

Director, Procurement and Grants Office, Centers for Disease Control and Prevention (CDC).

[FR Doc. 00–12740 Filed 5–19–00; 8:45 am]

BILLING CODE 4163–18–P

DEPARTMENT OF HEALTH AND HUMAN SERVICES

Centers for Disease Control and Prevention

Advisory Committee for Energy-Related Epidemiologic Research (ACERER) and ACERER Subcommittee for Community Affairs: Meetings

In accordance with section 10(a)(2) of the Federal Advisory Committee Act (Pub. L. 92–463), the Centers for Disease Control and Prevention (CDC) announces the following Federal advisory committee meetings.

Name: Advisory Committee for Energy-Related Epidemiologic Research (ACERER) Subcommittee for Community Affairs (SCA).

Time and Date: 9 a.m.–5:30 p.m., June 6, 2000.

Place: Sheraton Columbia Hotel, 10207 Wincopin Circle, Columbia, Maryland 21044, telephone 410/730–3900, fax 410/730–1290.

Status: Open to the public, limited only by the space available. The meeting room accommodates approximately 70 people.

Purpose: This subcommittee advises ACERER on matters related to community needs.

Matters To Be Discussed: Agenda items will include a discussion of the SCA recommendation concerning cumulative risk and dose; an update from CDC and the National Cancer Institute program development planning for communicating Iodine-131 exposures from nuclear weapons testing fallout; a panel discussion on community-based education and capacity building; and an update on the status and plans for CDC's and ATSDR's mechanisms for public participation at different Department of Energy sites.

Agenda items are subject to change as priorities dictate.

Contact Person for More Information: Paul G. Renard, Executive Secretary, SCA, ACERER, Radiation Studies Branch, Division of Environmental Hazards and Health Effects, National Center for Environmental Health (NCEH), CDC, 1600 Clifton Road, NE, (E–39), Atlanta, Georgia 30333, telephone 404/639–2550, fax 404/639–2575.

Name: Advisory Committee for Energy-Related Epidemiologic Research (ACERER).

Times and Dates: 8:30 a.m.–5 p.m., June 7, 2000; 8 a.m.–5 p.m., June 8, 2000.

Place: Sheraton Columbia Hotel, 10207 Wincopin Circle, Columbia, Maryland 21044, telephone 410/730–3900, fax 410/730–1290.

Status: Open to the public, limited only by the space available. The meeting room accommodates approximately 70 people.

Purpose: This committee is charged with providing advice and recommendations to the Secretary, Department of Health and Human Services; and to the Director, CDC; and the Administrator, Agency for Toxic Substances and Disease Registry (ATSDR), on establishment of a research agenda and the conduct of a research program pertaining to energy-related epidemiologic studies.

Matters To Be Discussed: Agenda items will include an update from the ACERER Subcommittee for Management Review of the Chernobyl Studies; an update from the ACERER SCA; a report on the status of the CDC report to Congress on fallout; an update on the Republic of the Marshall Islands Study; an update on the Hanford Thyroid Disease Study; and a workshop on the consideration of targeted screening for thyroid and parathyroid disease in a higher risk population exposed to Iodine-131.

Agenda items are subject to change as priorities dictate.

Contact Person for More Information: Michael J. Sage, Executive Secretary, ACERER, NCEH, CDC, 4700 Buford Highway, NE, (F–29), Atlanta, Georgia 30333, telephone 770/488–7002, fax 770/488–7015.

The Director, Management Analysis and Services Office, has been delegated the authority to sign **Federal Register** notices pertaining to announcements of meetings and other committee management activities for both the CDC and ATSDR.

Dated: May 16, 2000.

Carolyn J. Russell,

Director, Management Analysis and Services Office, Centers for Disease Control and Prevention.

[FR Doc. 00–12741 Filed 5–19–00; 8:45 am]

BILLING CODE 4163–18–P

DEPARTMENT OF HEALTH AND HUMAN SERVICES

Administration for Children and Families

[Program Announcement No. ACF/ACYF/CB FY 2000–01B]

Announcement of the Availability of Financial Assistance and Request for Applications To Support Adoption Opportunities Demonstration Projects, Child Abuse and Neglect Discretionary Activities, Child Welfare Training Projects, and Abandoned Infants Assistance Awards.

AGENCY: Children's Bureau, Administration on Children, Youth and Families, ACF, DHHS.

ACTION: Correction/cancellation.

SUMMARY: This document contains a correction to the Notice that was published in the **Federal Register** on Thursday, April 13, 2000 (65 FR 19904). The solicitation for competitive proposals for priority area 2000A.2—Operation of a National Adoption Information Exchange System as a freestanding entity is canceled.

The purposes of operating and maintaining a National Adoption Information Exchange System to bring together children who would benefit from adoption and qualified prospective adoptive parents who are seeking children and to conduct national recruitment efforts in order to reach prospective parents for children awaiting adoption will be combined with the task of continuing to develop an Internet-based photo listing system. Upon further consideration, it has been decided that separating the photo listing service from the exchange and database, upon which it depends, would cause serious confusion to State child welfare agencies, would undermine the integrity of what is a single effort to assist States in inter-jurisdictional recruitment of families, and would pose the possibility of supporting duplicative projects. Because the grant for the photo-listing service will be awarded following directions from Congress, the competition for the exchange alone is being canceled.

In accordance with the Department's Grants Policy Directive (GPD) 2.04(F), and ad hoc review will be done on the noncompetitive application for the combined exchange and photo-listing activities and a notification of the intent to award the grant will be published in the **Federal Register** prior to or simultaneously with the award of this grant. The notification will include, at a minimum, the following information:

(1) recipient's name; (2) amount of award; (3) project period; (4) reason for no competition; and (5) the name and address of the official to be contacted for more information on this award.

The complete corrected current availability of funds announcement package is posted on the Children's Bureau website: *http://www.acf.dhhs.gov/programs/cb/policy/cb200001.htm.*

FOR FURTHER INFORMATION CONTACT: The ACYF Operations Center at 1–800–351–2293 or send an email to *cb@lcgnet.com* or call Sally Flanzer, Children's Bureau, at 202–215–8914.

Dated: May 12, 2000.

Patricia Montoya,

Commissioner, Administration on Children, Youth and Families.

[FR Doc. 00–12696 Filed 5–19–00; 8:45 am]

BILLING CODE 4184–01–M

DEPARTMENT OF HEALTH AND HUMAN SERVICES

Administration for Children and Families

[Program Announcement No. ACYF–PA–HS–2000–09]

Fiscal Year 2000 Discretionary Announcement for the Head Start and Early Head Starts—Higher Education Faculty Initiative; Availability of Funds and Request for Applications

AGENCY: Administration on Children, Youth and Families, ACF, DHHS.

ACTION: Fiscal Year 2000 Discretionary Announcement for the Early Childhood Higher Education Faculty Initiative and Request for Application.

Statutory Authority 42 U.S. 9801, et. seq., The Head Start Act, as amended.

Catalog of Federal Deomestic Assistance (CFDA): 93.600 Head Start Act as amended.

SUMMARY: The Administration for Children and Families, Administration on Children, Youth and Families announces the availability of $1 million in funds to support one early childhood faculty initiative through a cooperative agreement. The cooperative agreement will be funded to provide opportunities for faculty in higher education to enhance their skills, knowledge and effectiveness as they teach teachers in Head Start and Early Head Start programs in order to insure better outcomes for children. A cooperative agreement is a form of Federal financial assistance that allows substantial Federal involvement in the activities for which funds are awarded.

Note: In order to satisfactorily compete under this announcement, it will be necessary for potential applicants to read the full announcement which is available through the Head Start Bureau's website: *www2.acf.dhhs.gov/programs/hsb/announce/index.htm.* Hard copies of the application may be obtained by writing or calling the ACYF Operations Center or sending an E-mail to: hs@lcgnet.com.

DATES: The closing date and time for the receipt of applications is 5:00 p.m. (Eastern Time Zone) on July 11, 2000. Applications received after the closing date will be classified as late.

ADDRESSES: Mail applications to: ACYF Operations Center, Attention: Early Childhood Higher Education Faculty Development Initiative Application, 1815 North Fort Myer Drive, Suite 300, Arlington, VA 22209 (1–800–351–2293). Prior to preparing and submitting an application, in order to satisfactorily compete under this announcement, it will be necessary for potential applicants to read the full announcement which is available through the Head Start Bureau's website:*www2.acf.dhhs.gov/programs/hsb/announce/index.htm*

FOR FURTHER INFORMATION CONTACT: ACYF Operations Center at: 1815 North Fort Myer Drive, Suite 300, Arlington, VA 22209 (1–800–351–2292) or telephone: 1–800–351–2293– or E-mail:hs@lcgnet.com.

Eligible Applicants: Universities, colleges, foundations, national organizations, public and private non-profit and for-profit agencies and organizations.

SUPPLEMENTARY INFORMATION: The purpose of this announcement is to request applications for the design, implementation and management oversight for conducting Early Childhood Higher Education Faculty Initiative. The result of this initiative will be to improve the quality and effectiveness of child outcomes in Head Start and Early Head Start and other early childhood development programs nationwide. This cooperative agreement will be for a five year project period.

Federal Share of Project Costs: The maximum Federal share is not to exceed $1 million for the first 12-month budget period and $1 million for each succeeding 12-month period.

Matching Requirements: Non-Federal match is not required.

Anticipated Number of Projects to be funded: It is anticipated that one project will be funded.

Evaluation Criteria

Applications received by the due date will be reviewed and scored competitively. Experts in the field, generally persons from outside the Federal government, will use the evaluation criteria listed below.

Criterion 1. Objectives and Need for Assistance: (25 Points)

The extent to which the application identifies relevant physical, economic, social, financial, institutional or other problems requiring a grant; demonstrates the need for assistance; states the principal and subordinate objectives of the project; provides supporting documentation or other testimonies from concerned interests other than the applicant.

Criterion 2. Results or Benefits Expected: (15 Points)

The extent to which the application identifies the results and benefits to be derived; describes the anticipated contribution to policy, practice, theory and/or research; specific benefits should be described for faculty preparing Head Start and Early Head Start teachers, home visitors, and their supervisors and the whole early childhood community working with children birth through five.

Criterion 3. Approach: (50 Points)

The extent to which the application outlines an acceptable plan of action pertaining to the scope of the project which details how the proposed work will be accomplished, including a timeline; list of each organization, consultants, including the evaluation process, or other key individuals who will work on the project along with a short description of the nature of their effort or contribution; assures the adequacy of time devoted to the project by key staff, the key staff should be knowledgeable of Head Start and Early Head Start, the applicant must fully describe the approach and/or methodology and delineate the relationship of each task to the accomplishment of the proposed objectives. There should be evidence that the planned approach reflects sufficient input from collaborating partners.

Criterion 4. Budget Appropriateness: (10 Points)

The extent to which the project's costs are reasonable in view of the activities to be carried out and the anticipated outcomes. The annual budget should include the cost for staff members to attend required conferences in the Washington, DC area.

State Single Point of Contact (SPOC)

This program is covered under Executive Order 12372,

''Intergovernmental Review of Federal Programs,'' and 45 CFR Part 100, ''Intergovernmental Review of Department of Health and Human Services Program and Activities.'' Under the Order, States may design their own processes for reviewing and commenting on proposed Federal assistance under covered programs.

Note: State/territory participation in the intergovernmental review process does not signify applicant eligibility for financial assistance under a program. A potential applicant must meet the eligibility requirements of the program for which it is applying prior to submitting an application to its SPOC, if applicable, or to ACF.

The following jurisdictions have elected not to participate in the Executive Order process: Alabama, Alaska, Colorado, Connecticut, Hawaii, Idaho, Kansas, Louisiana, Minnesota, Montana, Nebraska, New Jersey, New York, Ohio, Oklahoma, Oregon, Pennsylvania, South Dakota, Tennessee, Vermont, Virginia, Washington, American Samoa and Palau. Applicants from these jurisdictions or for projects administered by federally-recognized Indian Tribes need take no action in regard to E.O. 12372. Although the jurisidictions listed above no longer participate in the process, entities which have met the eligibility requirements of the program are still eligible to apply for a grant even if a State, Territory, Commonwealth, etc. does not have a SPOC. All remaining jurisdictions participate in the Executive Order process and have established SPOCs. Applicants from participating jurisdictions should contact their SPOC as soon as possible to alert them of the prospective applications and receive instructions .

Applicants must submit any required material to the SPOCs as soon as possible so that the program office can obtain and review SPOC comments as part of the award process. The applicant must submit all required materials, if any, to the SPOC and indicate the date of this submittal (or the date of contact if no submittal is required) on the Standard Form 424, item 16a.

Under 45 CFR 100.8(a)(2), a SPOC has 60 days from the application deadline to comment on proposed new or competing continuation awards.

SPOCs are encouraged to eliminate the submission of routine endorsements as official recommendations. Additionally, SPOCs are requested to clearly differentiate between mere advisory comments and those offical State process recommendations which may trigger the ''accommodate or explain'' rule. A list of the Single State Point of Contacts for each State and Territory can be found on the following website: *http://www.whitehouse.gov/omb/grants/spoc.html.*

When comments are submitted directly to ACF, they should be addressed to: William Wilson, Head Start Bureau, Office of Grants Management, 330 C. Street, SW, Washington, DC 20447. ATTN: Early Childhood Higher Education Faculty Initiative

Reminder: In order to satisfactorily compete under this announcement, it will be necessary for potential applicants to read the full announcement which is available through the Head Start Bureau's website: www2.acf.dhhs.gov/programs/hsb/announce/index.html. Mail applications to: ACYF Operations Center, Attention: Early Childhood Higher Education Faculty Initiative, 1815 North Fort Myers Drive, Suite 300, Arlington, VA 22209 (1–800–351–2293).

Dated: May 15, 2000.

Patricia Montoya,

Commissioner, Administration on Children, Youth and Families.

[FR Doc. 00–12695 Filed 5–19–00; 8:45 am]

BILLING CODE 4184–01–M

DEPARTMENT OF HEALTH AND HUMAN SERVICES

Administration for Children and Families

Medical Child Support Working Group

AGENCY: Administration for Children and Families, DHHS.

ACTION: Notice of open meeting.

SUMMARY: Pursuant to section 10(a)(2) of the Federal Advisory Committee Act (FACA), notice is given of the date for the ninth meeting of the Medical Child Support Working Group (MCSWG). The Medical Child Support Working Group was jointly established by the Secretaries of the Department of Labor (DOL) and the Department of Health and Human Services (DHHS) under section 401(a) of the Child Support Performance and Incentive Act of 1998. The purpose of the MCSWG is to identify the impediments to the effective enforcement of medical support by State child support enforcement agencies, and to submit to the Secretaries of DOL and DHHS a report containing recommendations for appropriate measures to address those impediments.

DATES: The ninth meeting of the MCSWG will be held on Thursday, June 8, 2000, from 10:30 pm to approximately 12:30 pm.

ADDRESSES: The meeting will be held in the sixth floor conference room of the Aerospace Building, 901 D Street, SW, Washington, DC. All interested parties are invited to attend this public meeting. Seating may be limited and will be available on a first-come, first-serve basis. Persons needing special assistance, such as sign language interpretation or other special accommodation, should contact the Executive Director of the Medical Child Support Working Group, Office of Child Support Enforcement, at the address listed below.

FOR FURTHER INFORMATION CONTACT: Ms. Samara Weinstein, Executive Director, Medical Child Support Working Group, Office of Child Support Enforcement, Fourth Floor East, 370 L'Enfant Promenade, SW, Washington, DC 20447 (telephone (202) 401–6953; fax (202) 401–5559; e-mail: sweinstein@acf.dhhs.fov). These are not toll-free numbers. The date, location and time for subsequent MCSWG meetings will be announced in advance in the **Federal Register**. However, it is expected this will be the last meeting.

SUPPLEMENTARY INFORMATION: Pursuant to section 10(a)(2) of the Federal Advisory Committee Act, as amended (5 U.S.C. Appendix 2) (FACA), notice is given of meetings of the Medical Child Support Working Group (MCSWG). The Medical Child Support Working Group was jointly established by the Secretaries of the Department of Labor (DOL) and the Department of Health and Human Services (DHHS) under section 401(a) of the Child Support Performance and Incentive Act of 1998 (P.L. 105–200).

The purpose of the MCSWG is to identify the impediments to the effective enforcement of medical support by State child support enforcement agencies, and to submit to the Secretaries of DOL and DHHS a report containing recommendations for appropriate measures to address those impediments. This report will include: (1) Recommendations based on assessments of the form and content of the National Medical Support Notice, as issued under proposed regulation; (2) appropriate measures that establish the priority of withholding of child support obligations, medical support obligations, arrearages in such obligations, and in the case of a medical support obligation, the employee's portion of any health care coverage premium, by such State agencies in light of the restrictions on garnishment provided under title III of the Consumer Credit Protection Act (15 U.S.C. 1671–1677); (3) appropriate procedures for

coordinating the provision, enforcement, and transition of health care coverage under the State programs for child support, Medicaid and the Child Health Insurance Program; (4) appropriate measures to improve the availability of alternate types of medical support that are aside from health care coverage offered through the noncustodial parent's health plan, and unrelated to the noncustodial parent's employer, including measures that establish a noncustodial parent's responsibility to share the cost of premiums, co-payments, deductibles, or payments for services not covered under a child's existing health coverage; (5) recommendations on whether reasonable cost should remain a consideration under section 452(f) of the Social Security Act; and (6) appropriate measures for eliminating any other impediments to the effective enforcement of medical support orders that the MCSWG deems necessary.

The membership of the MCSWG was jointly appointed by the Secretaries of DOL and DHHS, and includes representatives of: (1) DOL; (2)DHHS; (3) State Child Support Enforcement Directors; (4) State Medicaid Directors; (5) employers, including owners of small businesses and their trade and industry representatives and certified human resource and payroll professionals; (6) plan administrators and plan sponsors of group health plans (as defined in section 607(1) of the Employee Retirement Income Security Act of 1974 (29 U.S.C. 1167(1)); (7) children potentially eligible for medical support, such as child advocacy organizations; (8) State medical child support organizations; and (9) organizations representing State child support programs.

Agenda: The agenda for this meeting includes review approval of the MCSWG's report to the Secretaries containing recommendations for appropriate measures to address the impediments to the effective enforcement of medical child support as listed above. At the May, 1999 meeting, the MCSWG formed four (4) sub-committees to discuss barriers, issues, options, and recommendations in the interim between full MCSWG meetings. At the next three meetings (August, 1999, October, 1999, and November, 1999), the sub-committees presented their draft recommendations to the full MCSWG for further discussion and consideration. At the January, 2000 meeting, the MCSWG discussed the recommendations to be contained in the report to the Secretaries. At the March, 2000 meeting, the MCSWG reviewed for approval the draft report. At this meeting, the MCSWG will review and approve the final report.

Public participation: Members of the public wishing to present oral statements to the MSCWG should forward their requests to Samara Weinstein, MCSWG Executive Director, as soon as possible and at least four days before the meeting. Such request should be made by telephone, fax machine, or mail, as shown above. Time permitting, the Chairs of the MCSWG will attempt to accommodate all such requests by reserving time for presentations. The order of persons making such presentations will be assigned in the order in which the requests are received. Members of the public are encouraged to limit oral statements to five minutes, but extended written statements may be submitted for the record. Members of the public also may submit written statements for distribution to the MCSWG membership and inclusion in the public record without presenting oral statements. Such written statements should be sent to the MCSWG Executive Director, as shown above, by mail or fax at least five business days before the meeting.

Minutes of all public meetings and other documents made available to the MCSWG will be available for public inspection and copying at both the DOL and the DHHS. At DHHS, these documents will be available at the MCSWG Executive Director's Office, Office of Child Support Enforcement (OCSE), Administration for Children and Families, U.S. Department of Health and Human Services, Aerospace Building, Fourth Floor-East, 370 L'Enfant Promenade, SW, Washington, DC from 8:30 a.m. to 5:30 p.m. Questions regarding the availability of documents from DHHS should be directed to Andrew J. Hagan, OCSE (telephone (202) 401–5375). This is not a toll-free number. Any written comments on the minutes should be directed to Ms. Samara Weinstein, Executive Director of the Working Group, as shown above.

Dated: May 16, 2000.

Frank Fuentes,

Deputy Commissioner, Office of Child Support Enforcement.

[FR Doc. 00–12779 Filed 5–19–00; 8:45 am]

BILLING CODE 4184–01–M

DEPARTMENT OF HEALTH AND HUMAN SERVICES

Food and Drug Administration

[Docket No. 00N–1200]

Dietary Supplements Containing Ephedrine Alkaloids; Availability

AGENCY: Food and Drug Administration, HHS.

ACTION: Notice of availability; extension of comment period.

SUMMARY: The Food and Drug Administration (FDA) is extending to July 3, 2000, the comment period for a notice published in the **Federal Register** of April 3, 2000, that announced the availability of new adverse event reports (AER's) and related information concerning dietary supplements containing ephedrine alkaloids. This action is being taken in response to requests for more time to submit comments to FDA.

DATES: Submit written comments on the notice of availability by July 3, 2000.

ADDRESSES: Submit written comments to the Dockets Management Branch (HFA–305), Food and Drug Administration, 5630 Fishers Lane, rm. 1061, Rockville, MD 20852, or via e-mail to ''FDADockets@oc.fda.gov''. Comments are to be identified with the docket number found in brackets in the heading of this document.

FOR FURTHER INFORMATION CONTACT: Marquita B. Steadman, Center for Food Safety and Applied Nutrition (HF–26), Food and Drug Administration, 5600 Fishers Lane, Rockville, MD 20857, 301–827–6733.

SUPPLEMENTARY INFORMATION:

I. Extension of Comment Period

In the **Federal Register** of April 3, 2000 (64 FR 17510), FDA published a notice announcing a new public docket that makes available new adverse event reports and related information concerning dietary supplements containing ephedrine alkaloids. The **Federal Register** notice also announced FDA's intent to participate in a public forum to address safety information on such products.

Since publication of the April 3, 2000, **Federal Register** notice, FDA has received requests, both oral and written, to allow additional time for interested persons to comment. FDA believes that an extension of the comment period for an additional 45 days, until July 3, 2000, would be appropriate, in light of the amount of data FDA made publicly available on April 3, 2000. This extension will provide the public with

a total of 90 days to submit data, analyses, and other relevant information.

Although the agency has reviewed the requests asking for extensions of the comment period, the longest of which is for an additional 1 year, FDA does not believe that such a lengthy delay is in the best interest of the public health. FDA believes that delaying the receipt of comments for more than an additional 45 days (for a total of 90 days) is too long given the public health concerns at issue.

II. How to Submit Comments

Interested persons may, on or before July 3, 2000, submit written comments to the Dockets Management Branch (address above). You may also send comments to the Dockets Management Branch via e-mail to ''FDADockets@oc.fda.gov''. You should annotate and organize your comments to identify the specific issues to which they refer. You must submit two copies of comments, identified with the docket number found in brackets in the heading of this document, except that you may submit one copy if you are an individual. You may review received comments in the Dockets Management Branch between 9 a.m. and 4 p.m., Monday through Friday.

Dated: May 16, 2000.

Margaret M. Dotzel,

Acting Associate Commissioner for Policy.

[FR Doc. 00–12749 Filed 5–19–00; 8:45 am]

BILLING CODE 4160–01–F

DEPARTMENT OF HEALTH AND HUMAN SERVICES

Food and Drug Administration

Blood Products Advisory Committee; Notice of Meeting

AGENCY: Food and Drug Administration, HHS.

ACTION: Notice.

This notice announces a forthcoming meeting of a public advisory committee of the Food and Drug Administration (FDA). The meeting will be open to the public.

Name of Committee: Blood Products Advisory Committee.

General Function of the Committee: To provide advice and recommendations to the agency on FDA's regulatory issues.

Date and Time: The meeting will be held on June 15, 2000, from 8 a.m. to 5 p.m. and on June 16, 2000, from 9 a.m. to 12:30 p.m.

Location: Holiday Inn, 8777 Georgia Ave., Silver Spring, MD.

Contact Person: Linda A. Smallwood, Center for Biologics Evaluation and Research (HFM–302), Food and Drug Administration, 1401 Rockville Pike, Rockville, MD 20852–1448, 301–827–3514, or FDA Advisory Committee Information Line, 1–800–741–8138 (301–443–0572 in the Washington, DC area), code 19516. Please call the Information Line for up-to-date information on this meeting.

Agenda: On June 15, 2000, the committee will hear updates on summaries of the Public Health Service Advisory Committee on Blood Safety and Availability meeting, April 25 and 26, 2000; FDA's Transmissible Spongiform Encephalopathies Advisory Committee meeting, June 1 and 2, 2000; the FDA-sponsored workshop on plasticizers, October 18, 1999; and a briefing on blood supply monitoring. The committee will also hear presentations and provide recommendations on plasma pool screening by nucleic acid tests for Hepatitis A virus and, in the afternoon, the committee will hear presentations and provide recommendations on the development of rapid human immunodeficiency virus (HIV) tests. On June 16, 2000, the committee will hear updates on the requirements for syphilis testing, the risk of Hepatitis C virus to sexual partners, and relative sensitivity of Hepatitis B surface antigen and Hepatitis B virus nucleic acid tests. Also, the committee will hear and discuss presentations on the proposed document entitled ''FDA Guidance on Universal Leukoreduction: Current Thinking.''

Procedure: Interested persons may present data, information, or views, orally or in writing, on issues pending before the committee. Written submissions may be made to the contact person by Friday, June 2, 2000. Oral presentations from the public will be scheduled between approximately 11 a.m. to 11:30 a.m. and 2:30 p.m. to 3:30 p.m. on June 15, 2000, and between approximately 10:30 a.m. to 11:30 a.m. on June 16, 2000. Time allotted for each presentation may be limited. Those desiring to make formal oral presentations should notify the contact person before Friday, June 9, 2000, and submit a brief statement of the general nature of the evidence or arguments they wish to present, the names and addresses of proposed participants, and an indication of the approximate time requested to make their presentation.

Notice of this meeting is given under the Federal Advisory Committee Act (5 U.S.C. app. 2).

Dated: May 11, 2000.

Linda A. Suydam,

Senior Associate Commissioner.

[FR Doc. 00–12747 Filed 5–19–00; 8:45 am]

BILLING CODE 4160–01–F

DEPARTMENT OF HEALTH AND HUMAN SERVICES

Health Resources and Services Administration

Agency Information Collection Activities: Submission for OMB Review; Comment Request

Periodically, the Health Resources and Services Administration (HRSA) publishes abstracts of information collection requests under review by the Office of Management and Budget, in compliance with the Paperwork Reduction Act of 1995 (44 U.S.C. Chapter 35). To request a copy of the clearance requests submitted to OMB for review, call the HRSA Reports Clearance Office on (301)–443–1129.

The following request has been submitted to the Office of Management and Budget for review under the Paperwork Reduction Act of 1995:

Proposed Project: The Black Lung Clinic Program Guidelines (42 CFR 55a) (OMB No. 0915–0081) Extension

The purpose of the Black Lung Clinics Program (BLCP) is to stimulate and encourage local public and private agencies to improve the health status of coal workers and to increase coordination with other programs to assist the coal worker population. The goal of the BLCP is to provide services to minimize the effects of respiratory and pulmonary impairments of coal miners. Grantees provide specific diagnostic and treatment procedures required in the management of problems associated with black lung disease which improve the functional status, i.e., ''quality of life'', of the miner and reduces economic costs associated with morbidity and mortality arising from pulmonary diseases.

This request is for approval of the application requirements which are included in the program guidelines and the program regulation (42 CFR 55a.201 and 55a.301). Grantees must submit applications annually for continued grant support. The regulations outline the requirements for grant applications for States (55a.201) and entities other than States (55a.301). The program guidelines further elaborate on these requirements.

The grant application form is cleared under another OMB approval (OMB No.

0920–0428). The burden for completing the application is not reflected in the Black Lung clearance request because the burden is reported in the clearance of the application form. The current request for clearance includes one hour of burden, to keep the clearance of the program-specific application requirements on the OMB database.

Written comments and recommendations concerning the proposed information collection should be sent within 30 days of this notice to: Wendy A. Taylor, Human Resources and Housing Branch, Office of Management and Budget, New Executive Office Building, Room 10235, Washington, DC 20503.

Dated: May 16, 2000.

Jane Harrison,

Director, Division of Policy Review and Coordination.

[FR Doc. 00–12751 Filed 5–19–00; 8:45 am]

BILLING CODE 4160–15–P

DEPARTMENT OF HEALTH AND HUMAN SERVICES

Health Resources and Services Administration

Availability of the HRSA Preview: Cancellation of HIV/AIDS Programs, Special Projects of National Significance

AGENCY: Health Resources and Services Administration, HHS.

ACTION: Cancellation of Notice of Availability of Funds.

SUMMARY: This notice rescinds the Notice of Availability of funds in notice FR Doc. 99–21257, Part II, in the issue of Wednesday, August 18, 1999 on the following page, 45016, in column 2, last line, ''Special Projects of National Significance. In the table on page 45019, in the section HIV/AIDS Programs, under ''Special Projects of National Significance (SPNS).'' On page 45032, in column 3, from heading ''Special Projects of National Significance (SPNS)'' through to bottom of this column.

Dated: May 16, 2000.

Claude Earl Fox,

Administrator.

[FR Doc. 00–12753 Filed 5–19–00; 8:45 am]

BILLING CODE 4160–15–P

DEPARTMENT OF HEALTH AND HUMAN SERVICES

Health Resources and Services Administration

Division of Transplantation Extramural Grant Program: Model Interventions To Increase Organ and Tissue Donation

AGENCY: Health Resources and Services Administration, HHS.

ACTION: Notice of Availability of Funds.

SUMMARY: The Health Resources and Services Administration's (HRSA) Office of Special Programs (OSP), Division of Transplantation (DoT) announces that applications will be accepted for fiscal year (FY) 2000 for grants to support projects demonstrating model interventions to increase organ and tissue donation. The grant program will assist qualified organ procurement organizations (OPOs) and other private non-profit entities eligible for funds under Section 371(a)(3) of the Public Health Service (PHS) Act , 42 U.S.C. 273(a)(3), as amended. HRSA/OSP/DoT invites applications from consortia of institutions/organizations to participate in the FY 2000 grant program.

Availability of Funds

The estimated total funds available for the first year of support (direct and indirect costs) for all awards made under this grant program in FY 2000 will be up to $1.5 million. HRSA anticipates funding 8–10 projects. It is anticipated that the cost range for each project year will be $100,000-$300,000 per award; however, projects that fall outside that range also will be considered. The total project period for applications submitted in response to this program announcement may not exceed three years.

Eligible Applicants

Eligible applicants are consortia consisting at a minimum of the following two types of organizations/institutions: (1) At least one organization/institution with demonstrated expertise and experience in research and evaluation design and methods in the behavioral and social sciences; and (2) at least one organization/institution with demonstrated expertise and experience in organ donation, including but not limited to: OPOs, hospitals, and other health care organizations; national or regional associations; community-based service organizations; and public health or other government agencies. One member of each consortium shall serve as the primary applicant institution, which is required to be a private non-profit institution.

DATES: A letter of intent to submit an application is requested by June 8, 2000. Applications for this announced grant must be postmarked no later than July 11, 2000 to be considered for competition. Applications shall be considered as meeting the deadline if they are: (1) received on or before the deadline date; or (2) postmarked on or before the deadline date and received in time for orderly processing and submission to the review committee. Applications received with a postmark after 7–11–2000 will not be accepted.

ADDRESSES: Application kits, which include detailed instructions, are available through the HRSA Grant Application Center (telephone: 1–877–477–2123, or e-mail: hrsagac@hrsa.gov). The program announcement also can be obtained by accessing any of the following three Web sites: www.hrsa.gov, www.hrsa.gov/osp/dot, or www.organdonor.gov. Letters of intent to submit an application should be mailed to Dr. Mary L. Ganikos, Chief, Education Branch, DoT, OSP, HRSA, 5600 Fishers Lane, Parklawn Building, Room 7C–22, Rockville, Maryland 20857. All applications must be mailed or delivered to HRSA Grants Application Center, 1815 N. Fort Meyer Drive, Suite 300 Arlington, VA 22209.

FOR FURTHER INFORMATION CONTACT: Additional information may be obtained from Dr. Mary L. Ganikos, at the address above or via the following contact information: telephone—(301) 443–7577; fax—(301) 443–1267; or e-mail—mganikos@hrsa.gov.

Dated: May 16, 2000.

Claude Earl Fox,

Administrator.

[FR Doc. 00–12752 Filed 5–19–00; 8:45 am]

BILLING CODE 4160–15–P

DEPARTMENT OF HEALTH AND HUMAN SERVICES

Health Resources and Services Administration Advisory Council; Notice of Meeting

In accordance with section 10(a)(2) of the Federal Advisory Committee Act (Public Law 92–463), announcement is made of the following National Advisory body scheduled to meet during the month of June 2000.

Name: Maternal and Child Health Research Grants Review Committee.

Date and Time: June 14–16, 2000; 8 a.m.–5 p.m.

Place: Doubletree Hotel, 1750 Rockville Pike, Rockville, MD 20852.

The meeting is open to the public on Wednesday, June 14, 2000, from 9 a.m.–10 a.m., and closed for the remainder of the meeting.

Agenda: The open portion of the meeting will cover opening remarks by the Director, Division of Research, Training and Education, who will report on program issues, congressional activities, and other topics of interest to the field of maternal and child health. The meeting will be closed to the public on Wednesday, June 14, 2000, from 10 a.m., to the remainder of the meeting, for the review of grant applications. The closing is in accordance with the provisions set forth in section 552b(c)(6), Title 5 U.S.C., and the Determination by the Associate Administrator for Management and Program Support, Health Resources and Services Administration, pursuant to Public Law 92–463.

Anyone wishing to obtain a roster of members, minutes of meetings, or other relevant information should write or contact Gontran Lamberty, Dr. P.H., Executive Secretary, Maternal and Child Health Research Grants Review Committee, Room 18A–55, Parklawn Building, 5600 Fishers Lane, Rockville, MD 20857, or by telephone at (301) 443–2190.

Dated: May 16, 2000.

Jane M. Harrison,

Director, Division of Policy Review and Coordination.

[FR Doc. 00–12750 Filed 5–19–00; 8:45 am]

BILLING CODE 4160–15–P

DEPARTMENT OF HOUSING AND URBAN DEVELOPMENT

[Docket No. FR–4455–C–03]

Notice of Annual Factors for Determining Public Housing Agency Ongoing Administrative Fees for the Housing Choice Voucher Program and the Rental Certificate and Moderate Rehabilitation Programs; Technical Corrections

AGENCY: Office of the Assistant Secretary for Public and Indian Housing, HUD.

ACTION: Notice; technical corrections.

SUMMARY: This notice announces technical corrections to the monthly per unit fee amounts for use in determining the on-going administrative fee for public housing agencies (PHAs) administering the housing choice voucher program, and the rental certificate and moderate rehabilitation programs (including Single Room Occupancy and Shelter Plus Care) during Federal Fiscal Year (FY) 2000 published February 25, 2000 in the **Federal Register**.

EFFECTIVE DATE: May 22, 2000.

FOR FURTHER INFORMATION CONTACT: Gerald J. Benoit, Director, Real Estate and Housing Performance Division, Office of Public and Assisted Housing Delivery, Office of Public and Indian Housing, Department of Housing and Urban Development, Room 4210, 451 Seventh Street, SW., Washington, DC 20410–8000; telephone number (202) 708–0477 (this is not a toll-free telephone number). Hearing or speech impaired individuals may access this number via TTY by calling the toll-free Federal Information Relay Service at 1–800–877–8339.

SUPPLEMENTARY INFORMATION:

I. Technical Amendment

This technical amendment corrects an error in the **Federal Register** dated February 25, 2000 (65 FR 10316). On page 10316, subpart (c)(1) Preliminary Fees, it reads ''HUD may pay preliminary fees * * * if the first year of administering the Section 8 program was begun *prior* to *October 21, 1998* (Emphasis added)''. The Quality Housing and Work Responsibility Act of 1998, (QHWRA) changed PHA eligibility for preliminary fees. PHAs now may earn a fee up to $500 per unit for the initial funding increment for the first year the PHA administers a tenant-based assistance program, and only if the first year the PHA was administering the Section 8 program was begun on or after the merger date of October 1, 1998. See 24 CFR 982.152 (c).

In addition to the above change, this notice transmits changes to the monthly Administrative Fees Amounts on the fee tables. The administrative fee revisions are in Appendix A. These changes are to correct a computer programming error that caused a small reduction in the fees in the listed areas. The metropolitan FMR areas that have changed are listed below with the **Federal Register** page number to enable PHAs to easily identify if these revised fees apply to their program. Note that when there is a duplicate city listing, check for the appropriate state.

Aurburn-Opelika, AL–MSA, Corvallis, OR–MSA, and Culpepper County, VA were omitted from the administrative fee schedule for FY 2000 published in the February 25, 2000 **Federal Register** (65 FR 10316). They are listed in the attached administrative fee revision.

The metropolitan areas that have changes and their page numbers in the February 25, FY 2000 **Federal Register** are as follows:

Metropolitan FMR areas	Page		Metropolitan FMR areas	Page	
Amarillo, TX	MSA	10362	Laredo, TX	MSA	10362
Anniston, AL	MSA	10318	Louisille, KY–IN	MSA	10334
Biloxi-Gulfport-Pascagpula, MS	MSA	10344	Louisille, KY–IN	MSA	10334
Columbia, GA	MSA	10345	Lubbock, TX	MSA	10362
Columbus, GA–AL	MSA	10318	Macon, GA	MSA	10326
Columbus, GA–AL	MSA	10326	McAllen-Edinburg-Mission, TX	MSA	10362
Cumberland, MD–WV	MSA	10338	Memphis, TN–AR–MS	MSA	10361
Cumberland, MD–WV	MSA	10368	Memphis, TN–AR–MS	MSA	10361
Decatur, AL	MSA	10318	Montgomery, AL	MSA	10318
Eau Claire, WI	MSA	10369	Myrtle Beach, SC	MSA	10359
Florence, AL	MSA	10318	Owensboro, KY	MSA	10334
Fort Smith, AR–OK	MSA	10319	Parkersburg-Marietta, WV–OH	MSA	10369
Fort Smith, AR–OK	MSA	10319	Parkersburg-Marietta, WV–OH	MSA	10369
Gadsden, AL	MSA	10318	Pendleton County, KY		10334
Gallatin County, KY		10334	Provo-Orem, UT	MSA	10365
Grant County, KY		10334	Reno, NV	MSA	10349
Greenville-Spartanburg, Anderson, SC	MSA	10359	Salt Lake City-Ogden, UT	MSA	10365
Hattiesburg, MS	MSA	10344	San Angelo, TX	MSA	10362
Henderson County, TX		10362	Scranton-Wilkes-Barre-Hazleton, PA	MSA	10357
Huntington-Ashland, WV–KY–OH	MSA	10334	Sherman-Denison, TX	MSA	10362

Metropolitan FMR areas	Page	Metropolitan FMR areas	Page
Huntington-Ashland, WV–KY–OH	MSA 10368	Springfield, MO	MSA 10345
Huntington-Ashland, WV–KY–OH	MSA 10368	St. Joseph, MO	MSA 10345
Johnson City-Kingsport-Bristol, TN–VA	MSA 10361	Sumter, SC	MSA 10359
Johnson City-Kingsport-Bristol, TN–VA	MSA 10361	Texarkana, TX–AR	MSA 10319
Joplin, MO	MSA 10345	Texarkana, TX–AR	MSA 10362
Killeen-Temple, TX	MSA 10362	Waco, TX	MSA 10362
		Wausau, WI	MSA 10370

Dated: May 12, 2000.

Gloria Cousar,

Deputy Assistant Secretary for Public and Assisted Housing Delivery.

BILLING CODE 4210–33–P

APPENDIX A

SECTION 8 ADMINISTRATIVE FEE REVISIONS -- DOLLAR AMOUNT PER UNIT PER MONTH

METROPOLITAN FMR AREAS	A	B	C	COUNTIES COVERED
Anniston, AL MSA	39.20	36.58	15.68	Calhoun
Aurburn-Opelika, Al MSA	39.20	36.58	15.68	Lee
Columbus, GA-AL MSA	39.20	36.58	15.68	Russell
Decatur, AL MSA	39.20	36.58	15.68	Lawrence, Morgan
Florence, AL MSA	39.20	36.58	15.68	Colbert, Lauderdale
Gadsden, AL MSA	39.20	36.58	15.68	Etowah
Montgomery, AL MSA	39.20	36.58	15.68	Autauga, Elmore, Montgomery
Fort Smith, AR-OK MSA	37.36	34.72	14.88	Crawford, Sebasstian
Texarkana, TX-AR MSA	36.57	34.12	14.63	Bowie
Albany, GA MSA	38.91	36.31	15.56	Dougherty, Lee
Columbus, GA-AL MSA	39.20	36.58	15.68	Chattahoochee, Harris, Muscogee
Macon, GA MSA	38.91	36.31	15.56	Bibb, Houston, Jones, Peach, Twigga
Louisville, KY-IN MSA	36.73	34.27	14.69	Bullitt, Jefferson, Oldham
Gallatin County, KY	35.12	32.78	14.05	Gallatin
Grant County, KY	35.12	32.78	14.05	Grant
Huntington-Ashland, WV-KY-OH MSA	37.72	35.20	15.09	Boyd, Carter, Greenup
Louisville, KY-IN MSA	36.73	34.27	14.69	Bullitt, Jefferson, Oldham
Owensboro, KY MSA	35.12	32.78	14.05	Daviess
Pendleton County, KY	35.12	32.78	14.05	Pendleton
Cumberland, MD-WV MSA	37.72	35.20	15.09	Allegany
Columbia, MO MSA	38.40	35.83	15.36	Boone
Joplin, MO MSA	38.40	35.83	15.36	Jasper, Newton
Springfield, MO MSA	38.40	35.83	15.36	Christian, Greene, Webster
St. Joseph, MO MSA	38.40	35.83	15.36	Andrew, Bucanan
Biloxi-Gulfport-Pascagpula, MS MSA	38.68	36.10	15.47	Hancock, Harrison, Jackson
Hattiesburg, MS MSA	38.68	36.10	15.47	Forrest, Lamar
Memphis, TN-AR-MS MSA	41.71	38.94	16.69	Desota
Reno, NV MSA	53.01	48.51	20.79	Washoe
Huntington-Ashland, WV-KY-OH MSA	37.72	35.20	15.09	Lawrence
Parkersburg-Marietta, WV-OH MSA	37.72	35.20	15.09	Washington
Fort Smith, AR-OK MSA	36.31	33.88	14.52	Sequoyah
Corvallis, OR MSA	51.81	48.36	20.73	Benton
Scranton--Wilkes-Barre--Hazleton,PA MSA	38.56	36.00	15.43	Columbia, Lackawanna, Luzerne, Wyoming

SECTION 8 ADMINISTRATIVE FEE REVISIONS -- DOLLAR AMOUNT PER UNIT PER MONTH

METROPOLITAN FMR AREAS	A	B	C	COUNTIES COVERED
Greenville-Spartanburg-Anderson, SC MSA	37.69	35.17	15.08	Anderson, Cherokee, Greenville, Pikena, Spartanburg
Myrtle Beach, SC MSA	37.69	35.17	15.08	Horry
Sumter, SC MSA	37.69	35.17	15.08	Sumter
Johnson City-Kingsport-Bristol,TN-VA MSA	38.67	36.07	15.46	Carter, Hawkins, Sullivan, Unicoi, Washington
Memphis, TN-AR-MS MSA	41.71	38.94	16.69	Fayette, Shelby, Tipton
Abilene, TX MSA	36.57	34.12	14.63	Taylor
Amarillo, TX MSA	36.57	34.12	14.63	Potter, Randall
Henderson County, TX	36.47	34.12	14.63	Henderson
Killeen-Temple, TX MSA	36.57	34.12	14.63	Bell, Coryell
Laredo, TX MSA	36.57	34.12	14.63	Webb
Lubbock, TX MSA	36.57	34.12	14.63	Lubbock
Mc Allen-Edinburg-Mission, TX MSA	36.57	34.12	14.63	Hidalgo
San Angelo, TX MSA	36.57	34.12	14.63	Tom Green
Sherman-Denison, TX MSA	36.57	34.12	14.63	Grayson
Texarkana, TX-AR MSA	36.57	34.12	14.63	Bowie
Waco, TX MSA	36.57	34.12	14.63	McLennan
Provo-Orem, UT MSA	41.53	38.76	16.61	Utah
Salt Lake City-Ogden, UT MSA	41.53	38.76	16.61	Davis, Salt Lake, Weber
Culpepper County, VA	39.40	36.77	15.76	Culpepper County
Johnson City-Kingsport-Bristol,TN-VA MSA	38.67	36.07	15.46	Scott, Washington, Bristol City
Eau Claire, WI MSA	37.85	35.32	15.14	Chippewa, Eau Claire
Wausau, WI MSA	37.85	35.32	15.14	Marathon
Cumberland, MD-WV MSA	37.72	35.20	15.09	Mineral
Huntington-Ashland, WV-KY-OH MSA	37.72	35.20	15.09	Cabell, Wayne
Parkersburg-Marietta, WV-OH MSA	37.72	35.20	15.09	Wood

Note: A = First 600 units; B = Remainder of units; C = PHA owned units

[FR Doc. 00–12713 Filed 5–19–00; 8:45 am]

BILLING CODE 4210–33–P

DEPARTMENT OF THE INTERIOR

Fish and Wildlife Service

Notice of Receipt of Applications for Permit

The following applicants have applied for a permit to conduct certain activities with endangered species. This notice is provided pursuant to Section 10(c) of the Endangered Species Act of 1973, *as amended* (16 U.S.C. 1531, *et seq.*):

PRT–023232

Applicant: AZA Rhinoceros Taxon Advisory Group, c/o Buffalo Zoo, Buffalo, NY.

The applicant requests a permit to export blood samples from Indian Rhino (*Rhinoceros unicornis*) taken from captive held and captive born species being held in captivity in Canada and the United States. Samples are to be exported to University of Basel, Basel, Switzerland for scientific research purposes.

PRT–026630

Applicant: Duke University, Durham, NC.

The applicant requests a permit to import blood and tissue samples from Brown hyaena (*Hyaena brunnea*) taken from wild animals in Diamond Coast, Namibia. Samples are to be imported from Ministry of Environment & Tourism, Windhoek, Namibia for scientific research purposes.

PRT–027208

Applicant: Donald S. Usak, Roanoke, VA.

The applicant requests a permit to import the sport-hunted trophy of one male bontebok (*Damaliscus pygargus dorcas*) culled from a captive herd maintained under the management program of the Republic of South Africa, for the purpose of enhancement of the survival of the species.

PRT–027256

Applicant: Baltimore Zoo, Baltimore, MD.

The applicant requests a permit to import 140 live Panamanian golden frogs (*Atelopus zeteki*) taken from the wild in Panama. The 140 is to consist of 20 pairs of adult specimens and 100 end-stage tadpoles. The import is for the purpose of enhancement of the propagation of the species.

PRT–025357

Applicant: Toledo Zoological Gardens, Toledo, OH.

The applicant requests a permit to import one captive-born male and one captive-born female African wild dog (*Lycaon pictus*) from the Hoedspruit Research and Breeding Centre, South Africa, for the purpose of enhancement of the survival of the species through propagation.

PRT–020925

Applicant: Susanne Shultz, State University of New York Stony Brook, NY.

The applicant requests a permit to import the prey remains of Diana monkey (*Cercopithecus diana*) and Jentink's duiker (*Cephalophus jentinki*) collected in the wild in Cote d'Ivoire (Ivory Coast), for scientific research.

PRT–026842

Applicant: Chicago Zoological Park, Brookfield, IL.

The applicant requests a permit to export hair, blood, and tissue samples from one male captive born Goeldi's monkey (*Callimico goeldii*) to the Anthropologisches Institut der Universitact Zuerich, Zuerich, Switzerland, for scientific research.

PRT–017383

Applicant: Elizabeth N. Knowles, Jacksboro, TX.

The applicant requests a permit to import the sport-hunted trophy of one male bontebok (*Damaliscus pygargus dorcas*) culled from a captive herd maintained under the management program of the Republic of South Africa, for the purpose of enhancement of the survival of the species.

Marine Mammal

The public is invited to comment on the following application for a permit to conduct certain activities with marine mammals. The application was submitted to satisfy requirements of the Marine Mammal Protection Act of 1972, *as amended* (16 U.S.C. 1361 *et seq.*) and the regulations governing marine mammals (50 CFR 18).

PRT–027073

Applicant: John R. Kauffman, Pennsburg, PA

The applicant requests a permit to import a polar bear (*Ursus maritimus*) sport-hunted from the Lancaster Sound polar bear population, Northwest Territories Canada for personal use.

PRT–027126

Applicant: Stephen C. Delano, Cold Spring, MN

The applicant requests a permit to import a polar bear (*Ursus maritimus*) sport-hunted from the Lancaster Sound polar bear population, Northwest Territories Canada for personal use.

PRT–027135

Applicant: Donald R. Card, Grand Ledge, MI

The applicant requests a permit to import a polar bear (*Ursus maritimus*) sport-hunted from the Lancaster Sound polar bear population, Northwest Territories, Canada for personal use.

PRT—027207

Applicant: Peter M. Shaw, Foristell, MO

The applicant requests a permit to import a polar bear (*Ursus maritimus*) sport-hunted from the Northern Beaufort Sea polar bear population, Northwest Territories, Canada for personal use.

PRT—027206

Applicant: Greg Wilkie, Lenoir, NC

The applicant requests a permit to import a polar bear (*Ursus maritimus*) sport-hunted from the Lancaster Sound polar bear population, Northwest Territories, Canada for personal use.

PRT—027205

Applicant: Edward D. Yates, Wrightsville, PA

The applicant requests a permit to import a polar bear (*Ursus maritimus*) sport-hunted from the Lancaster Sound polar bear population, Northwest Territories, Canada for personal use.

PRT—027204

Applicant: Darrell W. Hindman, St. Louis, MO

The applicant requests a permit to import a polar bear (*Ursus maritimus*) sport-hunted from the Northern Beaufort Sea polar bear population, Northwest Territories, Canada for personal use.

PRT–027386

Applicant: Samuel A. Francis, Goshen, KY

The applicant requests a permit to import a polar bear (*Ursus maritimus*) sport-hunted from the McClintock Channel polar bear population, Northwest Territories, Canada for personal use.

PRT–027384

Applicant: Dyrk T. Eddie, Kalispell, MT

The applicant requests a permit to import a polar bear (*Ursus maritimus*) sport-hunted from the Lancaster Sound polar bear population, Northwest Territories, Canada for personal use.

Written data or comments should be submitted to the Director, U.S. Fish and Wildlife Service, Office of Management Authority, 4401 North Fairfax Drive, Room 700, Arlington, Virginia 22203 and must be received by the Director

within 30 days of the date of this publication.

Documents and other information submitted with these applications are available for review, *subject to the requirements of the Privacy Act and Freedom of Information Act,* by any party who submits a written request for a copy of such documents to the following office within 30 days of the date of publication of this notice: U.S. Fish and Wildlife Service, Office of Management Authority, 4401 North Fairfax Drive, Room 700, Arlington, Virginia 22203. Phone: (703/358–2104); FAX: (703/358–2281).

Dated: May 16, 2000.

Kristen Nelson,

Chief, Branch of Permits, Office of Management Authority.

[FR Doc. 00–12710 Filed 5–19–00; 8:45 am]

BILLING CODE 4310–55–P

DEPARTMENT OF THE INTERIOR

National Park Service

Reinstatement, Record of Decision on the Final General Management Plan and Final Environmental Impact Statement for the Missouri National Recreational River (59-Mile District), Nebraska and South Dakota

SUMMARY: Pursuant to section 102(2)(c) of the National Environmental Policy Act (NEPA) of 1969, as amended, and the regulations promulgated by the Council on Environmental Quality (40 CFR 1505.2), the National Park Service (NPS) is announcing the Record of Decision on the Final General Management Plan (GMP) and Final Environmental Impact Statement (FEIS) for the Missouri National Recreational River (MNRR), 59-Mile District. The MNRR is located in portions of Clay, Union, and Yankton counties, South Dakota and Cedar, Dixon, and Knox counties, Nebraska.

More specifically, the NPS is reinstating a Record of Decision previously suspended by the bureau. After the Record of Decision was originally signed, it was discovered that the FEIS was inadvertently not filed with the Environmental Protection Agency (EPA) as required by 40 CFR 1506.9. Accordingly, the NPS suspended the Record of Decision (see 65 FR 10542), suspended implementation of the GMP, filed the FEIS with EPA, and reopened the required 30-day period of no-action.

DATES: The Regional Director, National Park Service, Midwest Region, and the District Engineer, Omaha District, U.S. Army Corps of Engineers approved the Record of Decision on December 17, 1999. That Record of Decision was reinstated effective April 10, 2000.

FOR FURTHER INFORMATION CONTACT: Paul Hedren, Superintendent, Missouri National Recreational River, P.O. Box 591, O'Neill, Nebraska 68763, or by e-mail to MNRR_Superintendent@nps.gov, or call 402–336–3970.

SUPPLEMENTARY INFORMATION: The EPA published its notice of availability for the FEIS in the **Federal Register** on March 10, 2000 (65 FR 12992). The 30-day no-action period ended on April 10, 2000. No public comments were received during this period. Accordingly, the NPS has determined that no changes to the FEIS or the original Record of Decision are necessary. The Record of Decision as printed in the **Federal Register** on December 17, 1999 (64 FR 72359) is reinstated.

Dated: May 8, 2000.

David N. Given,

Acting Regional Director.

[FR Doc. 00–12700 Filed 5–19–00; 8:45 am]

BILLING CODE 4310–70–P

DEPARTMENT OF THE INTERIOR

National Park Service

Niobrara National Scenic River

AGENCY: National Park Service, Interior.

ACTION: Amended Notice of Intent to prepare an Environmental Impact Statement for the General Management Plan, Niobrara National Scenic River, Nebraska.

SUMMARY: The National Park Service will prepare a General Management Plan (GMP) and an Environmental Impact Statement (EIS) for the Niobrara National Scenic River (hereinafter, ''the Park''), Nebraska, in accordance with section 102(2)(C) of the National Environmental Policy Act of 1969 (NEPA), and a court decision invalidating a similar 1996 GMP/EIS and ordering a new one. This notice is being furnished as required by NEPA Regulation 40 CFR 1501.7, and serves to amend the Notice of Intent as published in the **Federal Register** on February 28, 2000 (65 FR 10542).

To facilitate sound planning and environmental assessment in the preparation of this EIS, the National Park Service intends to both validate information previously acquired for the 1996 GMP/EIS, and obtain suggestions and information from other agencies and the public on several court-driven issues to be addressed in the new EIS. The National Park Service will scope this GMP/EIS via the media, a newsletter, and through a World Wide Web page. Comments and participation in this scoping process are invited.

DATES: A project newsletter is being prepared, which is expected to be ready by the end of May 2000. The newsletter will contain specific information about how to provide input to the scoping phase of this project. Availability of the newsletter will be announced through local and regional media outlets. The newsletter will be sent to all addressees of record in the planning of the park's 1996 GMP/EIS, and to others who request the newsletter. To request a copy of the newsletter and to be added to the project mailing list, contact the park superintendent at 402–336–3970 or by writing to one of the addresses below.

ADDRESSES: Written comments and information should be directed to Superintendent, Niobrara National Scenic River, P.O. Box 591, O'Neill, Nebraska 68763; or by email, niob__gmp@nps.gov.

FOR FURTHER INFORMATION CONTACT: Superintendent, Niobrara National Scenic River, at either of the above addresses or at telephone number 402–336–3970.

SUPPLEMENTARY INFORMATION: Since the original notice of intent was published in February 2000, the United States Court of Appeals for the Eighth Circuit overturned the boundaries for the Niobrara National Scenic Riverway which has been established as part of a 1996 General Management Plan (GMP) for the park. A federal district court had overturned that GMP and associated Environmental Impact Statement (EIS) in a separate ruling. However, the district court ruling had retained the section of the GMP pertaining to the park's boundary. Therefore, the original notice of intent for the current project implied that boundaries were not within the scope of issues that would be addressed in the forthcoming GMP/EIS rewrite. The decision of the Court of Appeals has expanded the scope to include the park boundary.

The broad array of issues identified in the 1996 GMP/EIS, including land ownership, landscape conservation, water resource protection, hunting, fishing, and trapping, and visitor education and protection appear valid but reaffirmation will be sought through scoping. Specific examples of other issues that will be addressed in the GMP are: (1) the extent and manner in which partnerships can and will be employed to achieve management objectives, (2)

identify appropriate access and development in the park, particularly balancing growing park use and resource protection; and (3) identity appropriate land protection strategies workable on a predominantly privately owned landscape. Other issues may be added to this list following completion of scoping.

The new GMP will set forth a management concept for the park; establish plans for resource conservation, public use, and development; and identify strategies for resolving issues and achieving management objectives. It is expected that the GMP will guide park management for a period of fifteen to twenty years.

The GMP/EIS will investigate alternatives ranging from no-action to a variety of management approaches designed to guide public use and protect natural and cultural resources.

The environmental review of the GMP for the Niobrara National Scenic River will be conducted in accordance with requirements of NEPA (42 U.S.C. 4321 *et seq.*), NEPA regulations, and National Park Service procedures and policies for compliance with those regulations.

The National Park Service estimates the draft GMP and draft EIS will be available to the public in early 2001.

Dated: May 8, 2000.

David N. Given,

Acting Regional Director.

[FR Doc. 00–12701 Filed 5–19–00; 8:45 am]

BILLING CODE 4310–70–P

DEPARTMENT OF THE INTERIOR

National Park Service

Notice of Intent To Prepare a Draft Environmental Impact Statement for Cumberland Island National Seashore, Georgia

SUMMARY: In accordance with Section 102(2)(c) of the National Environmental Policy Act of 1969 (Public Law 91–190, as amended), the National Park Service (NPS) is preparing an Environmental Impact Statement (DEIS) for a General Management Plan Amendment, a Wilderness Management Plan, a Resource Management Plan (Cultural and Natural) and a Commercial Services Plan. The DEIS will evaluate the environmental consequences associated with the proposed actions and the other alternatives on management of wilderness, cultural and natural resources, and commercial services.

DATES: A public scoping meeting will be scheduled this summer. Time and place of the public meeting will be publicized in area newspapers. The DEIS will be available sometime in late summer.

FOR FURTHER INFORMATION CONTACT: To provide comments on this planning effort and to receive copies of the DEIS, please contact: Art Frederick, Superintendent, Cumberland Island National Seashore, P.O. Box 806, St. Marys, Georgia 31558, Telephone: (912) 882–4336.

SUPPLEMENTARY INFORMATION: Since June 1996 the NPS has been engaged in a process to determine the management of the island's wilderness. During the discussions concerning wilderness management, the NPS realized that the planning effort should broaden its focus. As a result the NPS has prepared a series of plans addressing the management of wilderness, cultural resources, natural resources, and commercial services.

Our practice is to make comments, including names and home addresses of respondents, available for public review during regular business hours. Individual respondents may request that we withhold their home address from the rulemaking record which we will honor to the extent allowable by law. There also may be circumstances in which we would withhold from the rulemaking record a respondent's identity, as allowable by law. If you wish for us to withhold your name and/or address, you must state this prominently at the beginning of your comments. We will make all submissions from organizations or businesses, and from individuals identifying themselves as representatives or officials of organizations or businesses, available for public inspection in their entirety.

Dated: May 11, 2000.

W. Thomas Brown,

Regional Director, Southeast Region.

[FR Doc. 00–12703 Filed 5–19–00; 8:45 am]

BILLING CODE 4310–70–M

DEPARTMENT OF THE INTERIOR

Draft General Management Plan/Environmental Impact Statement, Ebey's Landing National Historical Reserve, Washington

AGENCY: National Park Service.

ACTION: Notice of Intent to prepare an Environmental Impact Statement.

SUMMARY: The National Park Service will prepare a General Management Plan/Environmental Impact Statement (GMP/EIS) for Ebey's Landing National Historical Reserve.

A General Management Plan sets forth the basic management philosophy for a unit of the National Park System and provides the strategies for addressing issues and achieving identified management objectives for that unit. In the GMP/EIS and its accompanying public review process, the National Park Service will formulate and evaluate the environmental impacts of a range of alternatives to address distinct management strategies for the park, including resource protection and visitor use. The plan will guide the management of natural and cultural resources and visitor use of those resources for the next 15–20 years. Development concept plans for selected facilities may be included with the GMP.

Scoping is the term given to the process by which the scope of issues to be addressed in the GMP/EIS is identified. Representatives of Federal, State and local agencies, American Indian tribes, private organizations and individuals from the general public who may be interested in or affected by the proposed GMP/EIS are invited to participate in the scoping process by responding to this Notice with written comments.

All comments received will become part of the public record and copies of comments, including any names and home addresses of respondents, may be released for public inspection. Individual respondents may request that their home addresses be withheld from the public record, which will be honored to the extent allowable by law. Requests to withhold names and/or addresses must be stated prominently at the beginning of the comments. Anonymous comments will not be considered. Submissions from organizations or businesses, and from individuals identifying themselves as representatives or officials of organizations or businesses, will be made available for public inspection in their entirety.

Among the major issues likely to be addressed in the Ebey's Landing National Historical Reserve GMP/EIS are (1) resource information and protection, including a land protection plan, (2) cooperation with associated partners and interests, (3) interpretation, (4) visitor use and services, and (5) park administration. A full range of alternatives, including ''no action'', will be considered in the GMP/EIS to address these and other issues that may emerge during the planning process. The draft GMP/EIS is expected to be available for public review by the spring of 2001.

Because the responsibility for approving the GMP/EIS has been delegated to the National Park Service,

the EIS is a ''delegated'' EIS. The responsible official is John J. Reynolds, Regional Director, Pacific West Region, National Park Service.

DATES: Public scoping meetings will be held on Tuesday, June 20, 2000, 6:30–8:30 p.m. at the REI Seattle Flagship Store, Second Floor Meeting Room, 222 Yale Avenue North, Seattle, WA, and Wednesday, June 21, 2000, 2:30–5:00 p.m. and again at 7:00–9:00 p.m., at the Coupeville Recreation Hall, 901 NW Alexander Street, Coupeville, WA. Written comments on the scope of the issues and alternatives to be analyzed in the GMP/EIS should be received no later than August 15, 2000.

ADDRESSES: Written comments concerning the GMP/EIS should be sent to Reserve Manager, Ebey's Landing National Historical Reserve, P.O. Box 774, Coupeville, WA 98239–0774, or e-mail to ebla_administration@nps.gov.

FOR FURTHER INFORMATION CONTACT: Reserve Manager, Ebey's Landing National Historical Reserve, at (360) 678–6084, or NPS Reserve Liaison at (206) 220–4138.

Dated: May 11, 2000.

William C. Walters,

Deputy Regional Director, Pacific West Region.

[FR Doc. 00–12704 Filed 5–19–00; 8:45 am]

BILLING CODE 4310–70–P

DEPARTMENT OF THE INTERIOR

National Park Service

Boston Harbor Islands Advisory Council; Notice of Meeting

Notice is hereby given in accordance with the Federal Advisory Committee Act (PL 92–463) that the Boston Harbor Islands Advisory Council will meet on Wednesday, June 7, 2000. The meeting will convene at 4 p.m. at the United States Courthouse, 1 Courthouse Way, Jury Room II, Boston, Massachusetts.

The Advisory Council was appointed by the Director of National Park Service pursuant to Public Law 104–333. The 28 members represent business, educational, cultural, and environmental entities; municipalities surrounding Boston Harbor; Boston Harbor advocates; and Native American interests. The purpose of the Council is to advise and make recommendations to the Boston Harbor Islands Partnership with respect to the development and implementation of a management plan and the operation of the Boston Harbor Islands National Recreation Area.

The Agenda for this meeting is as follows:

1. Approval of minutes from March 2, 2000.
2. Discuss and plan reportcard.
3. Discussion on the draft General Management Plan.

The meeting is open to the public. Further information concerning Council meetings may be obtained from the Superintendent, Boston Harbor Islands. Interested persons may make oral/written presentations to the Council or file written statements. Such requests should be made at least seven days prior to the meeting to: Superintendent, Boston Harbor Islands NRA, 408 Atlantic Ave., Boston, MA, 02110, telephone (617) 223–8667.

Dated: May 8, 2000.

George E. Price, Jr.,

Superintendent, Boston Harbor Islands NRA.

[FR Doc. 00–12702 Filed 5–19–00; 8:45 am]

BILLING CODE 4310–70–P

DEPARTMENT OF THE INTERIOR

National Park Service

National Preservation Technology and Training Board: Meeting Cancellation

AGENCY: National Park Service, Interior.

ACTION: Notice.

Notice is hereby given in accordance with the Federal Advisory Committee Act, 5 U.S.C. Appendix (1988), that the National Preservation Technology and Training Board that was scheduled to meet May 22, 2000, in Santa Fe, New Mexico is cancelled.

The Board was to meet Monday, May 22 from 8:30 a.m. to 5:30 p.m. in the DeVargas room of the Hotel St. Francis, 201 Don Gasper Avenue, Santa Fe, New Mexico. Matters to be discussed were to include, officer and committee reports; consideration of present and future NCPTT programs; consideration of NCPTT mission and long-range plan, assess the accomplishment of the board's first six years; and the election of officers for two-year terms. The board meeting will be rescheduled at a later time.

Persons wishing more information concerning this meeting, or who wish to submit written statements, may do so by contacting Mr. E. Blaine Cliver, Chief, HABS/HAER, National Park Service, 1849 C Street NW, Washington, DC 20240, telephone: (202) 343–9573.

Dated: May 16, 2000.

Eric DeLong,

Acting Chief, HABS/HAER, Designated Federal Official, National Park Service.

[FR Doc. 00–12699 Filed 5–19–00; 8:45 am]

BILLING CODE 4310–70–P

DEPARTMENT OF JUSTICE

Notice of Lodging of Consent Decree Pursuant to Sections 106 and 107 of CERCLA

Notice is hereby given that on May 5, 2000, the United states lodged a proposed Consent Decree with the United States District Court for the Southern district of Texas in *United States and State of Texas* v. *Alpha Metals, Inc., et al.,* Civ. A. No. G–00250, in connection with related case *Amoco Chemical Co., et al.* v. *United States, et al.,* Civ. A. No. G–96–272 (consolidated with Civ. A. No. G–96–247), pursuant to sections 106 and 107 of CERCLA, 42 U.S.C. 9606 and 9607. The proposed Consent Decree resolves civil claims of the United States and the State of Texas against settling generator defendants and settling former owner/operator defendants, and contribution claims against settling federal agencies, regarding the Tex Tin Superfund Site—a former tin and copper smelter and metals reclamation facility established during WWII—located in Texas City, Texas. Under the proposed Consent Decree, settling defendants agree to perform the cleanup of the Tex Tin Site, financed in substantial part by settling federal agencies, at an estimated cost of approximately $27 million. In addition, the settling parties agree, among other things, to finance a proposed remedy addressing continued erosion in the Swan Lake Marsh are near Galveston Bay, pay natural resource damages relating to losses and injuries in the Swan Lake Marsh area, and reimburse Amoco Chemical Company for past response costs for work it performed at the Site.

The Department of Justice will receive comments relating to the proposed Consent Decree for 30 days following publication of this Notice. Comments should be addressed to the Assistant Attorney General, Environment and Natural Resources Division, United States Department of Justice, P.O. Box 7611, Ben Franklin Station, Washington, DC 20044–7611, and should refer to *United States and State of Texas* v. *Alpha Metals, Inc., et al.,* DOJ No. 90–11–3–1669. The proposed Consent Decree may be examined at the Office of the United States Attorney for the Southern District of Texas, Houston, Texas, and the Region VI Office of the United States Environmental Protection Agency, 1445 Ross Avenue, Dallas, Texas 75202. A copy of the proposed Consent Decree may be obtained by mail from the Department of Justice Consent Decree Library, P.O. Box 7611, Washington, DC 20044. In requesting a

copy, please enclose a check for reproduction costs (at 25 cents per page) in the amount of $94.50 for the Decree, payable to the Consent Decree Library.

Joel M. Gross,

Chief, Environmental Enforcement Section, Environment and Natural Resources Division.

[FR Doc. 00–12734 Filed 5–19–00; 8:45 am]

BILLING CODE 4410–15–M

DEPARTMENT OF JUSTICE

Notice of Lodging of Consent Decree Under the Comprehensive Environmental Response, Compensation and Liability Act

Notice if hereby given that on May 3, 2000, a proposed Consent Decree in *United States* v. *Cedar Wood Apartments, Inc. et al,* Civil Action No. 00–C–2451, was lodged with the United States District Court for the Northern District of Illinois.

This consent decree represents a settlement of claims brought against the following twenty-four defendants under section 107 of CERCLA, 42 U.S.C. 9607, for the recovery of costs incurred by the United States in responding to the release or threatened release of hazardous substances at and from the Tri-County/Elgin Landfill Superfund Site in Elgin, Illinois: Cedar Woods Apartments, Inc.; Clarence Davids & Company; Eaton's Red Wood Inn; Elgin Academy; Elgin Public School District 46; Elgin Rehabilitation Center; Elgin Turners; The Famous Chili Pub, Ltd.; Genoa-Kingston Community Unit School District #424; Golf Rose Animal Hospital; Hamphire Grade School and Hampshire High School (Community Unit School District 300); Hiawatha Public School; Jewel Food Stores; Judson College; Olde Towne Animal Hospital; Pal Joey's Restaurant and Lounge; Rand Grove Partnership, an Illinois Partnership (owner and operator of Rand Grove Village Apartments); Red Lobster Inns of America, Inc. (n/k/a/ GMRI, Inc.), a Florida Corporation; West Chicago School District #33; St. Joseph Hospital; Town & Country Gardens; Vavrus & Associates; Village of Carol Stream; and Village Squire.

The United States Postal Service is also a party to the proposed Consent Decree. Through the Consent Decree, the United States Postal Service would resolve potential contribution claims that may be asserted against the United States due to alleged liability on behalf of the United States Postal Service.

Under the proposed settlement, the defendants and the United States Postal Service will collectively pay $168,069.42.

The Department of Justice will receive for a period of thirty (30) days from the date of this publication comments relating to the Consent Decree. Comments should be addressed to the Assistant Attorney General, Environment and Natural Resources Division, P.O. Box 7611, U.S. Department of Justice, Washington, DC 20044–7611, and should refer to *United States* v. *Cedar Wood Apartments, Inc. et al,* D.J. Ref. 90–11–3–1088/2.

The Consent Decree may be examined at the office of the United States Environmental Protection Agency, Region 5, 77 West Jackson Boulevard, Chicago, Illinois. A copy of the Consent Decree may also be obtained by mail from the Consent Decree Library, P.O. Box 7611, U.S. Department of Justice, Washington, DC 20044–7611. In requesting a copy, please enclose a check in the amount of $13.00 (25 cents per page reproduction cost, 52 pages) payable to the Consent Decree Library.

Joel M. Gross,

Chief, Environmental Enforcement Section, Environment and Natural Resources Division.

[FR Doc. 00–12733 Filed 5–19–00; 8:45 am]

BILLING CODE 4410–15–M

DEPARTMENT OF JUSTICE

Notice of Lodging of Consent Decree Pursuant to the Clean Water Act

Notice is hereby given, in accordance with 28 CFR 50.7, that on May 11, 2000, the United States lodged a proposed Consent Decree with the United States District Court for the Western District of Wisconsin, in *United States* v. *Enzyme Bio-Systems, Ltd.,* Case No. *00–C–283–S* (W.D. Wis.), under section 309 of the Clean Water Act, 33 U.S.C. 1319. The proposed Consent Decree resolves certain claims of the United States against Enzyme Bio-Systems, arising out of Enzyme Bio-Systems' plant located at 2600 Kennedy Drive, Beloit, Wisconsin. Specifically, the United States alleged that Enzyme Bio-Systems, in violation of section 307(d) of the Clean Water Act, 33 U.S.C. 1317(d), exceeded certain effluent limitations set forth in its Industrial Discharge Permit issued to Enzyme Bio-Systems by the City of Beloit, Wisconsin.

Under the proposed Consent Decree Enzyme Bio-Systems will pay the United States a $46,100 civil penalty, Additionally, the proposed Consent Decree provides for the implementation of a Supplemental Environmental Project (''SEP'') that requires expenditures of at least $850,000. The SEP involves Enzyme Bio-Systems: purchasing a pretreatment plant previously abandoned by the City of Beloit; installing and operating a reverse osmosis membrane treatment system capable of treating 25,000 gallons per day of high strength BOD; hauling the BOD filtrate off site for application as a soil conditioner, possible fertilizer substitute, or other environmentally beneficial reuse; petitioning the City to reduce Enzyme Bio-Systems' allowable effluent limits set forth in its Industrial Discharge Permit; and providing EPA with a SEP completion report and quarterly progress reports. This pollution reduction/prevention SEP will reduce the BOD load to the Beloit POTW, reduce the use of artificial chemical fertilizers by the potential land application of the BOD filtrate as fertilizer, and result in revenue to the City of Beloit for the purchase of its abandoned pretreatment facility. Because the technology of the reverse osmosis membrane system is very innovative and carries a risk of technological impracticability, if the pilot studies demonstrate that the membrane system cannot effectively filter high strength BOD filtrate, then Enzyme Bio-Systems can elect to pay an optional additional civil penalty in lieu of completing its obligations under the SEP requirements.

The Department of Justice will accept written comments relating to the proposed Consent Decree for 30 days after publication of this Notice. Comments should be addressed to the Assistant Attorney General, Environment and Natural Resources Division, United States Department of Justice, P.O. Box 7611, Ben Franklin Station, Washington, DC 20044–7611, and should refer to *United States* v. *Enzyme Bio-Systems, Ltd.,* Case No. *00–C–283–S* (W.D. Wis.), DOJ No. 90–5–1–1–4504. The proposed Consent Decree may be examined at the Office of the United States Attorney for the Western District of Wisconsin, Madison, Wisconsin, and at the Region 5 Office of the United States Environment Protection Agency, 77 West Jackson Boulevard, Chicago, Illinois 60604. A copy of the proposed Consent Decree may also be obtained by mail from the U.S. Department of Justice, Consent Decree Library, P.O. Box 7611, Washington, DC 20044–7611. In requesting a copy, please enclose a check for reproduction costs (at 25 cents per page), in the amount of $5.25 for the

Decree, payable to the Consent Decree Library.

Joel M. Gross,

Chief, Environmental Enforcement Section, Environment and Natural Resources Division, Department of Justice.

[FR Doc. 00–12732 Filed 5–19–00; 8:45 am]

BILLING CODE 4410–15–M

DEPARTMENT OF JUSTICE

Notice of Lodging of Consent Decree and Proposed Prospective Purchaser Agreement Under the Comprehensive Environmental Response, Compensation, and Liability Act

Under 28 CFR 50.7, notice is hereby given that on April 18, 2000, a proposed Consent Decree in *United States* v. *Scott County Sportsmen's Association*, Case No. 30–00–CV–10052 (S.D. Iowa) was lodged with the United States District Court for the Southern District of Iowa, Davenport Division. The Consent Decree settles claims by the United States, against Scott County Sportsmen's Association (SCSA) under Section 107 of the Comprehensive Environmental Response, Compensation, and Liability Act (CERCLA), 42 U.S.C. 9607. The Complaint of the United States seeks past and future CERCLA response costs incurred by EPA in connection with the Nahant Marsh Superfund Site (the Site) and for damages for injuries to natural resources at the Site as determined by the Department of the Interior (Interior), the Natural Resource Trustee. Defendant SCSA owned property on the Site and used it for target and skeet shooting, resulting in releases of lead, a hazardous substance.

The Consent Decree requires SCSA to record a conservation easement for its 78-acre property at the Site in favor of the Iowa Natural Heritage Foundation (INHF) for preservation of the land as a reserve for wildlife and to prevent residential, commercial and industrial development of the land. The SCSA is required to transfer ownership of its property at the Site to the City of Davenport, Iowa (the City), and notify EPA of the transfer. All proceeds from the sale of the Property will be paid to the United States. The City agrees to pay the purchase price of $86,000 to EPA (which will receive $81,000) and to Interior (which will receive $5,000) pursuant to a proposed Agreement and Covenant Not to Sue, or Prospective Purchaser Agreement, entered into between the United States and the City. Under the terms of the Prospective Purchaser Agreement, the City will also place a restrictive covenant on the land that restricts residential development.

In exchange for its commitments under the Consent Decree, Defendant SCSA will receive a covenant not to sue pursuant to Sections 106 and 107(a) of CERCLA, 42 U.S.C. 9606 AND 9607(a), for response actions and response costs relating to the Site. Defendant SCSA will also receive a covenant not to sue for natural resource damages under CERCLA.

The Department of Justice will receive for a period of thirty (30) days from the date of this publication comments relating to the Consent Decree. Comments should be addressed to the Assistant Attorney General of the Environment and Natural Resources Division, Department of Justice, Washington, DC 20530, and should refer to *United States* v. *Scott County Sportsmen's Association*, Case No. 3–00–CV–10052 (S.D. Iowa), D.J. Ref. No. 90–11–2–1372/1.

The Consent Decree may be examined at the office of the United States Attorney for the Southern District of Iowa, U.S. Courthouse Annex, 110 East Court Avenue, Suite 286, Des Moines, Iowa 50309. The Consent Decree may also be examined at the office of Region VII of the U.S. Environmental Protection Agency, 726 Minnesota Avenue, Kansas City, Kansas 66101. A copy of the Consent Decree may also be obtained by mail from the Department of Justice Consent Decree Library, P.O. Box 7611, Washington, DC 20044. In requesting a copy, please enclose a check in the amount of $15.00 (with exhibits) (25 cents per page reproduction cost) payable to the Consent Decree Library. If requesting a copy of the Consent Decree exclusive of exhibits, please enclose a check in the amount of $7.50 (25 cents per page reproduction cost) payable to the Consent Decree Library.

Joel M. Gross,

Chief, Environmental Enforcement Section, Environmental and Natural Resources Division.

[FR Doc. 00–12731 Filed 5–19–00; 8:45 am]

BILLING CODE 4410–15–M

DEPARTMENT OF JUSTICE

[AAG/A Order No. 198–2000]

Privacy Act of 1974; System of Records

The Department of Justice proposes to modify the Office of the Inspector General Investigative Records System, JUSTICE/OIG–001, last published in the **Federal Register** on March 10, 1992 (57 FR 8476). The primary purpose of the system is to enable the Department's Office of the Inspector General to conduct its responsibilities under the Inspector General Act of 1978, as amended by the Inspector General Act Amendments of 1988, 5 U.S.C. App. 3, including its responsibility to conduct and supervise investigations relating to programs and operations of the Department. The Department now proposes to modify the system by adding one new routine use, revising two existing routine uses, and making other minor revisions.

New routine use (i) will permit the Department to share information about investigations with complainants and victims in order to inform them about the progress and results of investigations arising from the matters of which they complained or were the victim.

In addition, two current routine uses are being revised. First, routine use (a) relating to disclosures of records indicating a violation or potential violation of law or contract to those entities responsible for investigating, prosecuting or enforcing those laws or contracts is being revised to make it clear that disclosure extends both to records that indicate such a violation or potential violation standing alone and to records that do so only when viewed in combination with other documents. Second, routine use (d) relating to disclosures made to other entities in connection with the assignment, hiring, retention, issuance or revocation of a security clearance, reporting of an investigation, letting of a contract, or the issuance or revocation of a license, grant, or other benefit to an individual by those entities is being modified in two respects: (1) To eliminate the requirement that information may be released only upon the request of a specified entity and (2) to permit information pertinent to the issuance or retention of a professional license to be shared with the relevant professional licensing organization.

Finally, the Department is making minor revisions to the 'System Location,' 'Retirevability,' 'System Manager and Address,' and 'Retention and Disposal' sections to reflect current conditions. A typographical error in routine use (h) as it was originally published in the **Federal Register** (57 FR 8477), is also being corrected.

5 U.S.C. 552a(e)(4) and (11) provide that the public be given thirty days in which to comment on these proposed changes. Any comments must be submitted in writing to Mary Cahill, Management Analyst, Management and Planning Staff, Justice Management Division, Department of Justice, Washington, DC 20530 by June 21, 2000.

As required by 5 U.S.C. 552(r) and Office of Management and Budget (OMB) implementing regulations, the Department of Justice has provided a report on the proposed changes to OMB and the Congress.

A modified system description is set forth below.

Dated: May 8, 2000.

Stephen R. Colgate,

Assistant Attorney General for Administration.

JUSTICE/OIG–001

SYSTEM NAME:

Office of the Inspector General Investigative Records.

SYSTEM LOCATION:

U.S. Department of Justice, Office of the Inspector General, 950 Pennsylvania Ave., NW, Washington, DC 20530–0001 and 1425 New York Ave., NW, Suite 7100, Washington, DC 20530. During the course of an investigation, records are also kept in the investigations field offices, the addresses of which are listed on the OIG's website at http://www.usdoj.gov/org.

* * * * *

ROUTINE USES OF RECORDS MAINTAINED IN THE SYSTEM, INCLUDING CATEGORIES OF USERS AND THE PURPOSES OF SUCH USES:

* * * * *

(a) In the event that a record, either by itself or in combination with other information, indicates a violation or potential violation of law, whether civil, criminal, or regulatory in nature, and whether arising by general stature or particular program statute, or by rule, regulation, or order pursuant thereto, or a violation or potential violation of a contract, the relevant record may be disclosed to the appropriate agency, whether Federal, state, local, foreign, or international, charged with the responsibility or investigating or prosecuting such violation, enforcing or implementing such statute, rule, regulation, or order, or with enforcing such contract.

* * * * *

(d) A record may be disclosed to a Federal, State, local, foreign, or international agency, or other public authority or professional licensing organization, in connection with the assignment, hiring, or retention of an individual, the issuance or revocation of a security clearance, the reporting of an investigation of an individual, the letting of a contract, or the issuance or revocation of a license, grant, or other benefit by such an entity, to the extent that the information is relevant and necessary to that entity's decision on the matter. No disclosure will be made under this paragraph unless the Inspector General or his designee determines that the information is sufficiently reliable to support a referral to another office within the Department of Justice or to another Federal, state, or local agency for criminal, civil, administrative, personnel, or regulatory action.

* * * * *

(h) Information permitted to be released to the news media and the public pursuant to 28 CFR 50.2 may be made available, unless it is determined that release of the specific information in the context of a particular case would constitute an unwarranted invasion of personal privacy.

(i) Information may be disclosed to complainants and victims to the extent necessary to provide them with information concerning the progress or results of the investigation or case arising from the matters of which they complained or were the victim.

* * * * *

RETRIEVABILITY:

Each OIG investigation is assigned a case number and all records relating to a particular investigation are filed and retrieved by that case number. In some instances, records may also be retrievable by the surnames of subjects, witnesses, and/or complaintants.

* * * * *

RETENTION AND DISPOSAL:

Records in this system are retained and disposed of in accordance with the schedule approved by the Archivist of the United States, Job Number NI–60–97–4.

SYSTEM MANAGER(S) AND ADDRESS:

Office of the General Counsel, Office of the Inspector General, Department of Justice, 950 Pennsylvania Avenue, NW, Room 4261, Washington, DC 20530–0001.

* * * * *

[FR Doc. 00–12735 Filed 5–19–00; 8:45 am]

BILLING CODE 4410–CJ–M

DEPARTMENT OF LABOR

Employment and Training Administration

Investigations Regarding Certifications of Eligibility To Apply for NAFTA Transitional Adjustment Assistance

Petitions for transitional adjustment assistance under the North American Free Trade Agreement-Transitional Adjustment Assistance Implementation Act (Public Law 103-182), hereinafter called (NAFTA–TAA), have been filed with State Governors under Section 250(b)(1) of Subchapter D, Chapter 2, Title II, of the Trade Act of 1974, as amended, are identified in the Appendix to this Notice. Upon notice from a Governor that a NAFTA–TAA petition has been received, the Director of the Division of Trade Adjustment Assistance (DTAA), Employment and Training Administration (ETA), Department of Labor (DOL), announces the filing of the petition and takes action pursuant to paragraphs (c) and (e) of Section 250 of the Trade Act.

The purpose of the Governor's actions and the Labor Department's investigations are to determine whether the workers separated from employment on or after December 8, 1993 (date of enactment of Pub. L. 103–182) are eligible to apply for NAFTA–TAA under Subchapter D of the Trade Act because of increased imports from or the shift in production to Mexico or Canada.

The petitioners or any other persons showing a substantial interest in the subject matter of the investigations may request a public hearing with the Director of DTAA at the U.S. Department of Labor (DOL) in Washington, DC provided such request if filed in writing with the Director of DTAA not later than June 1, 2000.

Also, interested persons are invited to submit written comments regarding the subject matter of the petitions to the Director of DTAA at the address shown below not later than June 1, 2000.

Petitions filed with the Governors are available for inspection at the Office of the Director, DTAA, ETA, DOL, Room C–4318, 200 Constitution Avenue, NW, Washington, DC 20210.

Signed at Washington, DC this 16th day of May 2000.

Grant D. Beale,

Program Manager, Division of Trade Adjustment Assistance

APPENDIX

Subject firm	Location	Date received at Governor's office	Petition No.	Articles produced
Dana Corporation (Wkrs)	Marion, OH	05/05/2000	NAFTA–3,879	Axles & ring gears.
Ranco North America (Co.)	Plain City, OH	05/01/2000	NAFTA–3,880	Plastic water valves, metal water valves.
Johnson Controls (Co.)	Goshen, IL	05/01/2000	NAFTA–3,881	Machining equipment for parts.
Schmalbach Luheca Plastic Containers (Co.).	Novi, MI	01/24/2000	NAFTA–3,882	Plastic bottles.
Maier's Bakery (Wkrs)	Easton, PA	05/04/2000	NAFTA–3,883	Bread production.
Grayson Enterprises (Wkrs)	Eaton, IN	05/04/2000	NAFTA–3,884	Sterile sampling & custom printed bags.
Lind Shoe (Wkrs)	Somerset, WI	04/27/2000	NAFTA–3,885	Shoes.
Ingersoll Rand Transportation (Wkrs).	Los Angeles, CA	05/22/2000	NAFTA–3,886	Door locks, door lock parts.
Vanity Fair Intimates (Co.)	Jackson, AL	05/08/2000	NAFTA–3,887	Women's intimate apparel.
Lear Corporation (Wkrs)	El Paso, TX	05/03/2000	NAFTA–3,888	Dies for crimpong cables, molds harness.
Pairgain Technologies (Wkrs)	Tustin, CA	03/07/2000	NAFTA–3,889	Higain products.
Wheaton USA (Co.)	Pennsville, NJ	04/28/2000	NAFTA–3,890	Silk screening of glass cosmetic bottle.
Nortel Networks (Wkrs)	Santa Clara, CA	05/05/2000	NAFTA–3,891	Printed circuit.
Schreiber Foods (IBT)	Monroe, WI	05/01/2000	NAFTA–3,892	Cheese products.
Peninsula Ligh Metals (Wkrs)	Hawthorne, CA	05/03/2000	NAFTA–3,893	Wheels, pedestals, valves.
Southland Manufacturing (Co.)	Ashland, AL	05/08/2000	NAFTA–3,894	Men's slacks.
Brunswick (Co.)	Tulsa, OK	05/04/2000	NAFTA–3,895	Fishing tackle.
Ambar Chemical (Co.)	Manistee, MI	04/28/2000	NAFTA–3,896	Calcium chloride products.
Hillsville Apparel (Co.)	Hillsville, VA	05/09/2000	NAFTA–3,897	Men's women's & children's sportwear.
Volex (Co.)	Clinton, AR	05/09/2000	NAFTA–3,898	Plastic finished power cord.
TI Group Automotive System (Co.).	Valdosta, GA	05/02/2000	NAFTA–3,899	Auto parts.
Triboro Electric (Co.)	Doylestown, PA	05/09/2000	NAFTA–3,900	Fluorescent & incandescent lighting.
Hamilton Beach—Proctor Silex (Co.).	Mount Airy, NC	05/10/2000	NAFTA–3,901	Toasters.
Bertone KTG Mills (UNITE)	Brooklyn, NY	05/01/2000	NAFTA–3,902	Trimmings.
Dana (Co.)	Kendallville, IN	05/10/2000	NAFTA–3,903	Fuel rails.
APV America (USWA)	Lake Mills, WI	05/09/2000	NAFTA–3,904	Valves.
Four Seasons Apparel (Co.)	Murfreesboro, NC	05/12/2000	NAFTA–3,905	Sportwear.
RHI (Co.)	Farber, MO	05/10/2000	NAFTA–3,906	Bricks for steel.
Go Dan Industrial (Wkrs)	Houston, TX	04/05/2000	NAFTA–3,907	Automotive industrial radiators.
Invensys Appliance Controls (Co.).	Independence, VA	05/09/2000	NAFTA–3,908	Cold controls for refrigeration.
Beloit Corporation (Co.)	Neeah, WI	05/10/2000	NAFTA–3,909	Paper making machinery.

[FR Doc. 00–12768 Filed 5–19–00; 8:45 am]
BILLING CODE 4510–30–M

DEPARTMENT OF LABOR

Employment and Training Administration

[TA–W–37, 382]

Alaska Petroleum Contractors Alpine Project Kenai (Kenai, AK; Notice of Negative Determination Regarding Application for Reconsideration

By application dated April 24, 2000, petitioners requested administrative reconsideration of the Department's negative determination regarding eligibility to apply for Trade Adjustment Assistance (TAA), applicable to workers and former workers of the subject firm. The denial notice was signed on April 7, 2000, and published in the Federal Register on April 21, 2000 (64 FR 21474).

Pursuant to 29 CFR 90.18 (c) reconsideration may be granted under the following circumstances:

(1) If it appears on the basis of facts not previously considered that the determination complained of was erroneous;

(2) If it appears that the determination complained of was based on a mistake in the determination of facts not previously considered; or

(3) If in the opinion of the Certifying Officer, a mis-interpretation of facts or of the law justified reconsideration of the decision.

The April 7, 2000, denial of TAA for workers engaged in employment related to the fabrication and assembly of large oil production modules at Alaska Petroleum Contractors, Alpine Project Kenai, Kenai, Alaska, was based on the finding that the ''contributed importantly'' test of the worker group eligibility requirements of section 222 of the Trade Act of 1974 was not met. The contributed importantly test is generally determined by a survey of the major declining customers of the subject firm. The Department conducted a survey of the sole customer of Alaska Petroleum Contractors, Alpine Project Kenai, Kenai, Alaska. The customer did not import oil production modules during the time period relevant to the investigation.

The petitioners assert that many U.S. companies bid on the construction of offshore drilling platforms which was awarded to a Korean producer. They add that Alaska Petroleum Contractors would have been able to build this project or continue with planned work and deliver on site, except for cheaper foreign labor and material offered by the Koreans and the drop in crude oil prices

brought on by the importation of foreign oil.

The subject firm did not bid on the project identified by the petitioners. The Alpine Project Kenai, Kenai, Alaska, was scheduled for a specific period of time and employee layoffs were the result of the completion of that project. The workers were not engaged in the production of oil, therefore, any increase in imports of crude oil is not a basis for worker group certification for the workers of the subject firm. The Department is required to examine the imports of articles of like or directly competitive with those produced by the workers firm. In this case oil production modules.

Conclusion

After review of the application and investigative findings, I conclude that there has been no error or misinterpretation of the law or of the facts which would justify reconsideration of the Department of Labor's prior decision. Accordingly, the application is denied.

Signed at Washington, DC this 11th day of May 2000.

Grant D. Beale,

Program Manager, Division of Trade Adjustment Assistance.

[FR Doc. 00–12767 Filed 5–19–00; 8:45 am]

BILLING CODE 4510–30–M

DEPARTMENT OF LABOR

Employment and Training Administration

[TA–W–37,378]

Bugbee & Niles Company, Incorporated Providence; Notice of Termination of Investigation

Pursuant to Section 221 of the Trade Act of 1974, an investigation was initiated on February 22, 2000, in response to a petition filed on the same date on behalf of workers at Bugbee & Niles Company, Incorporated, Providence, Rhode Island.

The company official submitting the petition has requested that the petition be withdrawn. Consequently, further investigation in this case would serve no purpose, and the investigation has been terminated.

Signed in Washington, DC this 10th day of May 2000.

Grant D. Beale,

Program Manager, Division of Trade Adjustment Assistance.

[FR Doc. 00–12769 Filed 5–19–00; 8:45 am]

BILLING CODE 4510–30–M

DEPARTMENT OF LABOR

Employment and Training Administration

[TA–W–37,335]

Calvin Klein New York, NY; Amended Certification Regarding Eligibility To Apply for Worker Adjustment Assistance

In accordance with Section 223 of the Trade Act of 1974 (19 U.S.C. 2273) the Department of Labor issued a Notice of Certification Regarding Eligibility to Apply for Worker Adjustment Assistance on March 30, 2000, applicable to workers of Calvin Klein, New York, New York. The notice was published in the **Federal Register** on April 21, 2000 (FR 65 21474).

At the request of the State agency, the Department reviewed the certification for workers of the subject firm. The workers produce women's sportswear. New findings show that there was a previous certification, TA–W–33,830, issued on March 10, 2000, for workers of Calvin Klein, New York, New York who were engaged in employment related to the production of women's sportswear. That certification expired March 10, 2000. To avoid an overlap in worker group coverage, the certification is being amended to change the impact date from February 1, 1999 to March 11, 2000, for workers of the subject firm.

The amended notice applicable to TA–W–37,335 is hereby issued as follows:

''All workers of Calvin Klein, New York, New York who became totally or partially separated from employment on or after March 11, 2000 through March 30, 2002 are eligible to apply for adjustment assistance under Section 223 of the Trade Act of 1974.''

Signed at Washington, DC, this 9th day of May 2000.

Grant D. Beale,

Program Manager, Division of Trade Adjustment Assistance.

[FR Doc. 00–12770 Filed 5–19–00; 8:45 am]

BILLING CODE 4510–30–M

DEPARTMENT OF LABOR

Employment and Training Administration

[TA–W–34,244 Riddle, Oregon; TA–W–34,244A Coos Bay, Oregon]

Cominco Ltd., Cominco American, Inc. Glenbrook Operations (Formerly Glenbrook Nickel Company); Amended Certification Regarding Eligibility To Apply for Worker Adjustment Assistance

In accordance with section 223 of the Trade Act of 1974 (19 U.S.C. 2273) the Department of Labor issued a Certification of Eligibility to Apply for Worker Adjustment Assistance on February 25, 1998, applicable to workers of Glenbrook Nickel Company, Riddle, Oregon. The notice was published in the **Federal Register** on March 23, 1998 (63 FR 13879). The certification was amended March 20, 1998 to include another manufacturing facility of the subject firm. The notice was published in the **Federal Register** on March 31, 1998 (63 FR 15441).

At the request of the State agency, the Department reviewed the certification for workers of the subject firm. The workers were engaged in the production of ferronickel. New information received from the company shows that Cominco Ltd and Cominco American are the owners of the Glenbrook properties. In 1998, Glenbrook Nickel Company became known as Cominco Ltd., Cominco American,—Glenbrook Operations. Information also shows that workers separated from employment at Glenbrook Nickel Company had their wages reported under a separate unemployment insurance (UI) tax account for Cominco Ltd., Cominco American,—Glenbrook Operations.

Accordingly, the Department is amending the certification to properly reflect this matter.

The amended notice applicable to TA–W–34,244 and TA–W–344,244A are hereby issued as follows:

All workers of Cominco Ltd., Cominco American,—Glenbrook Operations (Formerly Glenbrook Nickel Company), Riddle, Oregon and Coos Bay, Oregon who became totally or partially separated from employment on or after January 30, 1997 through February 25, 2000 are eligible to apply for adjustment assistance under section 223 of the Trade Act of 1974.

Signed at Washington, DC this 12th day of May, 2000.

Grant D. Beale,

Program Manager, Division of Trade Adjustment Assistance.

[FR Doc. 00–12772 Filed 5–19–00; 8:45 am]

BILLING CODE 4510–30–M

DEPARTMENT OF LABOR

Employment and Training Administration

[TA–W–33,947]

Herman Katz Enterprises, d/b/a H.K. Company Now Known as Katz Lace Corporation, New York, NY; Amended Certification Regarding Eligibility To Apply for Worker Adjustment Assistance

In accordance with Section 223 of the Trade Act of 1974 (19 U.S.C. 2273) the Department of Labor issued a Certification of Eligibility to Apply for Worker Adjustment Assistance on December 11, 1997, applicable to workers of Herman Katz Enterprises, d/b/a H.K. Company, New York, New York. The notice was published in the **Federal Register** on January 6, 1998 (63 FR 578).

At the request of the State agency, the Department reviewed the certification for workers of the subject firm. The workers were engaged in the production of lace and performed office, administration, warehousing and distribution services. The company reports that in October, 1997, Herman Katz Enterprises, d/b/a H.K. Company ''became known as Katz Lace Corporation''. Worker separations continued to occur at the subject firm until its closing in November, 1999.

Accordingly, the Department is amending the certification determination to correctly identify the new title name to read ''Herman Katz Enterprises, d/b/a H.K. Company, now know as Katz Lace Corporation'', New York, New York.

The intent of the Department's certification is to include all workers of Herman Katz Enterprises, d/b/a H.K. Company, now known as Katz Lace Corporation who were adversely affected by increased imports.

The amended notice applicable to TA–W–33, 947 is hereby issued as follows:

All workers of Herman Katz Enterprises, d/b/a H.K. Company, now known as Katz Lace Corporation, New York, New York who became totally or partially separated from employment on or after October 7, 1996 through December 11, 1999 are eligible to apply for adjustment assistance under Section 223 of the Trade Act of 1974.

Signed at Washington, DC, this 12th day of May 2000.

Grant D. Beale,

Program Manager, Division of Trade Adjustment Assistance.

[FR Doc. 00–12771 Filed 5–19–00; 8:45 am]

BILLING CODE 4510–30–M

DEPARTMENT OF LABOR

Employment and Training Administration

Investigation Regarding Certifications of Eligibility To Apply for Worker Adjustment Assistance

Petitions have been filed with the Secretary of Labor under Section 221(a) of the Trade Act of 1974 (''the Act'') and are identified in the Appendix to this notice. Upon receipt of these petitions, the Director of the Division of Trade Adjustment Assistance, Employment and Training Administration, has instituted investigations pursuant to Section 221(a) of the Act.

The purpose of each of the investigations is to determine whether the workers are eligible to apply for adjustment assistance under Title II, Chapter 2, of the Act. The investigations will further relate, as appropriate, to the determination of the date on which total or partial separations began or threatened to begin and the subdivision of the firm involved.

The petitioners or any other persons showing a substantial interest in the subject matter of the investigations may request a public hearing, provided such request is filed in writing with the Director, Division of Trade Adjustment Assistance, at the address show below, not later than June 1, 2000.

Interested persons are invited to submit written comments regarding the subject matter of the investigations to the Director, Division of Trade Adjustment Assistance, at the address shown below, not later than June 1, 2000.

The petitions filed in this case are available for inspection at the Office of the Director, Division of Trade Adjustment Assistance, Employment and Training Administration, U.S. Department of Labor, 200 Constitution Avenue, NW, Washington, DC 20210.

Signed at Washington, DC this 8th day of May, 2000.

Grant D. Beale,

Program Manager, Division of Trade Adjustment Assistance.

APPENDIX

[Petitions instituted on 05/08/2000]

TA–W	Subject firm (petitioners)	Location	Date of petition	Product(s)
37,639	Peninsula Light Metals ()	LaMiranda, CA	04/24/2000	Engine Pedestals, Wheels, Valves.
37,640	Montana Power Co (Wkrs)	Butte, MT	04/13/2000	10 Meter Readers.
37,641	Jo B's, Inc. (Co.)	Odenville, AL	04/23/2000	Baby Carrier.
37,642	Zeller Corporation (UAW)	Defiance, OH	03/19/2000	Universal Joints.
37,643	Philips Electronics North (Co.)	Wartburg, TN	04/21/2000	Power Supply Transformers.
37,644	Ranco North America (Co.)	Plain City, OH	05/01/2000	Water Valves.
37,645	Lind Shoe Company (Wkrs)	Somerset, WI	04/20/2000	Bowling Shoes.
37,646	Fairway Foods of Michigan (Wkrs)	Menominee, MI	04/17/2000	Fruits and Vegetables.
37,647	Eureka Co (The) (IAM)	Bloomington, IL	04/14/2000	Vacuum Cleaners.
37,648	Olympia Limited (Wkrs)	Hoboken, NJ	04/04/2000	Imitation Fur Coats.
37,649	San Manuel Healthcare (Wkrs)	San Manuel, AZ	04/20/2000	Medical Care Center.
37,650	Long Handles Shirts (Co.)	Monroe, NC	04/17/2000	Men's Knit Shirts.
37,651	Nortel Networks (Wkrs)	Santa Clara, CA	04/20/2000	Telephone Switches.
37,652	Monofrax, Inc (IAM)	Falconer, NY	04/13/2000	Fused Cast Refractories.
37,653	Frontier Foundry (Wkrs)	Titusville, PA	04/22/2000	Aluminum, Steel, Bronze Castings.
37,654	Garan, Inc (Co.)	Corinth, MS	04/19/2000	Cut Men, Women and Childrens Clothing.
37,655	Cassie Cotillion, Inc (Co.)	Albemarle, NC	04/17/2000	Children's Sleepwear.
37,656	United Protective Cloth. (Co.)	Purvis, MS	04/11/2000	Disposable Clothing.
37,657	Ambar Chemical, Inc. (Co.)	Manistee, MI	04/25/2000	Liquid Calcium.
37,658	Cooper Tools (Wkrs)	Statesboro, GA	04/14/2000	Scissors, and Hammers.
37,659	Climax Molybdenum Co. (Co.)	Empire, CO	04/28/2000	Mine Molybdenum.
37,660	Go Dan (Wkrs)	Houston, TX	04/28/2000	Radiators—Car and Truck.

[FR Doc. 00–12774 Filed 5–19–00; 8:45 am]

BILLING CODE 4510–30–M

DEPARTMENT OF LABOR

Employment and Training Administration

Investigations Regarding Certifications of Eligibility To Apply for Worker Adjustment Assistance

Petitions have been filed with the Secretary of Labor under section 221(a) of the Trade Act of 1974 (''the Act'') and are identified in the Appendix to this notice. Upon receipt of these petitions, the Director of the Division of Trade Adjustment Assistance, Employment and Training Administration, has instituted investigations pursuant to section 221(a) of the Act.

The purpose of each of the investigations is to determine whether the workers are eligible to apply for adjustment assistance under Title II, Chapter 2, of the Act. The investigations will further relate, as appropriate, to the determination of the date on which total or partial separations began or threatened to begin and the subdivision of the firm involved.

The petitioners or any other persons showing a substantial interest in the subject matter of the investigations may request a public hearing, provided such request is filed in writing with the Director, Division of Trade Adjustment Assistance, at the address shown below, not later than June 1, 2000.

Interested persons are invited to submit written comments regarding the subject matter of the investigations to the Director, Division of Trade Adjustment Assistance, at the address shown below, not later than June 1, 2000.

The petitions filed in this case are available for inspection at the Office of the Director, Division of Trade Adjustment Assistance, Employment and Training Administration, U.S. Department of Labor, 200 Constitution Avenue, NW., Washington, DC 20210.

Signed at Washington, DC this 1st day of May, 2000.

Grant D. Beale,

Program Manager, Division of Trade Adjustment Assistance.

APPENDIX

[Petitions instituted on 05/01/2000]

TA–W	Subject firm (petitioners)	Location	Date of petition	Product(s)
37,624	PMC Specialties Group (PACE)	Fords, NJ	03/28/2000	Butalated Hydroxy Teraline.
37,625	Thatcher Summit, Inc. (Comp)	Rexburg, ID	04/19/2000	Backpacks.
37,626	Thomson Consumer Elec. (IBEW)	Indianapolis, IN	04/10/2000	Printed Circuit Boards.
37,627	Bari Manufacturing Co. (UNITE)	Passaic, NJ	04/10/2000	Ladies' Jackets and Tops.
37,628	Hutchinson Technology (Wrks)	Sioux Falls, SD	03/30/2000	Thin Film Suspensions.
37,629	Raychem/Tyco Electronics (Comp)	Fuquay-Varina, NC	04/17/2000	Aerial Closures for Cable.
37,630	Motor Coils Manufacturing (IUE)	Braddock, PA	04/17/2000	Traction Motors for Locomotives.
37,631	Celestica Corp. (Comp)	Campton, KY	04/17/2000	Printed Circuit Boards.
37,632	Clark Material Handling (Comp)	Lexington, KY	04/22/2000	Forklifts.
37,633	Holmes Group/Rival Div. (Wrks)	Warrensburg, MO	04/17/2000	Heater Parts, Industrial Fans.
37,634	Marathon Oil Co. (Comp)	Lafayette, LA	04/20/2000	Crude Oil, Natural Gas Condensates.
37,635	MSX International (Wrks)	El Paso, TX	04/18/2000	Plastic Products.
37,636	Voyager Emblem Co. (USWA)	Sanborn, NY	04/19/2000	Emblems.
37,637	Fort James Operating Co. (Comp)	Clatskanie, OR	03/28/2000	Groundwood Specialty Papers.
37,638	Wildon Industries (Wrks)	Mt. Bethel, PA	04/19/2000	Solid Surfacing Materials.

[FR Doc. 00–12773 Filed 5–19–00; 8:45 am]

BILLING CODE 4510–30–M

NATIONAL ARCHIVES AND RECORDS ADMINISTRATION

Advisory Committee on the Records of Congress; Meeting

AGENCY: National Archives and Records Administration.

ACTION: Notice of meeting.

SUMMARY: In accordance with the Federal Advisory Committee Act, the National Archives and Records Administration (NARA) announces a meeting of the Advisory Committee on the Records of Congress. The committee advises NARA on the full range of programs, policies, and plans for the Center for Legislative Archives in the Office of Records Services.

DATES: June 12, 2000, from 10 a.m. to 11:30 a.m.

ADDRESSES: United States Capitol Building, Room S–211.

FOR FURTHER INFORMATION CONTACT: Michael L. Gillette, Director, Center for Legislative Archives, (202) 501–5350.

SUPPLEMENTARY INFORMATION:

Agenda

Third Report to Congress

Electronic Records Archives

Other current issues and new business.

The meeting is open to the public.

Dated: May 16, 2000.

Mary Ann Hadyka,

Committee Management Officer.

[FR Doc. 00–12745 Filed 5–19–00; 8:45 am]

BILLING CODE 7515–01–P

NATIONAL SCIENCE FOUNDATION

Special Emphasis Panel in Electrical and Communications Systems; Notice of Meeting

In accordance with the Federal Advisory Committee Act (Pub. L. 92–463, as amended), the National Science Foundation announces the following meeting.

Name: Special Emphasis Panel in Electrical and Communications Systems (1196).

Date and Time: June 12–13, 2000, 8:30 a.m. to 5 p.m.

Place: Room 330, National Science Foundation, 4201 Wilson Blvd., Arlington, VA.

Type of Meeting: Closed.

Contact Person: Dr. Filbert J. Bartoli, Program Director, Room 675, Division of Electrical and Communications Systems, National Science Foundation, 4201 Wilson Blvd., Arlington, VA 22230. Telephone (703) 306–1339.

Purpose of Meeting: To provide advice and recommendations concerning proposals submitted to NSF for financial support.

Agenda: To review and evaluate unsolicited proposals submitted in response to the program announcement (NSF 99–2).

Reason for Closing: The proposals being reviewed include information of a proprietary or confidential nature, including technical information; financial date, such as salaries; and personal information concerning individuals associated with the proposals. These matters are exempt under 5 U.S.C. 552b(c), (4) and (6) of the Government in the Sunshine Act.

Dated: May 17, 2000.

Karen J. York,

Committee Management Officer.

[FR Doc. 00–12826 Filed 5–19–00; 8:45 am]

BILLING CODE 7555–01–M

NATIONAL SCIENCE FOUNDATION

Special Emphasis Panel is Engineering Education and Centers; Notice of Meeting

In accordance with Federal Advisory Committee Act (Pub. L. 92–463, as amended), the National Science Foundation announces the following meeting:

Name: Special Emphasis Panel in Engineering Education and Centers (173).

Date/Time: July 17–18, 2000 7:30 a.m. to 5:30 p.m.

Place: Holiday Inn, 4610 North Fairfax Drive, Arlington, VA 22203.

Type of Meeting: Closed.

Contact Person: Mary Poats, Program Manager, Engineering Education and Centers Division, National Science Foundation, Room 585, 4201 Wilson Boulevard, Arlington, VA 22230.

Purpose of Meeting: To provide advice and recommendations concerning proposals submitted to NSF for financial support.

Agenda: To review and evaluate proposals submitted to the Combined Research-Curriculum Development Program.

Reason for Closing: The proposals being reviewed include information of a proprietary or confidential nature, including technical information; financial data, such as salaries; and personal information concerning individuals associated with the proposals. These matters are exempt under 5 U.S.C. 552b(c), (4) and (6) of the Government in the Sunshine Act.

Dated: May 17, 2000.

Karen J. York,

Committee Management Officer.

[FR Doc. 00–12830 Filed 5–19–00; 8:45 am]

BILLING CODE 7555–01–M

NATIONAL SCIENCE FOUNDATION

Special Emphasis Panel in Experimental & Integrative Activities; Notice of Meeting

In accordance with the Federal Advisory Committee Act (Pub. L. 92–463, as amended), the National Science Foundation announces the following meeting:

Name: Special Emphasis Panel in Experimental & Integrative Activities (1193).

Date/Time: June 29, 2000, 8 a.m.–5 p.m.

Place: Room 120, National Science Foundation, 4201 Wilson Blvd., Arlington, VA.

Type of Meeting: Closed.

Contact Person: Dr. Anthony Maddox, CISE Educational Innovation, Experimental and Integrative Activities, Room 1160, National Science Foundation, 4201 Wilson Boulevard, VA 22230, Telephone: (703) 306–1981.

Purpose of Meeting: To provide advice and recommendations concerning proposals submitted to the National Science Foundation for financial support.

Agenda: To review and evaluate CISE Educational Innovation proposals submitted in response to the program announcement (NSF 00–33).

Reason for Closing: The proposals being reviewed include information of a proprietary or confidential nature, including technical information; financial data, such as salaries; and personal information concerning individuals associated with the proposals. These matters are exempt under 5 U.S.C. 552b(c), (4) and (6) of the Government in the Sunshine Act.

Dated: May 17, 2000.

Karen J. York,

Committee Management Officer.

[FR Doc. 00–12828 Filed 5–19–00; 8:45 am]

BILLING CODE 7555–01–M

NATIONAL SCIENCE FOUNDATION

Special Emphasis Panel in Graduate Education; Notice of Meeting

In accordance with the Federal Advisory Committee Act (Pub. L. 92–463, as amended), the National Science Foundation announces the following meeting:

Name: Special Emphasis Panel in Graduate Education (57).

Date/Time: June 29th and 30th 2000, 8:00 a.m. to 5:00 p.m.

Place: National Science Foundation, 4201 Wilson Blvd., Room 375, Arlington, VA.

Type of Meeting: Closed.

Contact Persons: Dr. Sonia Ortega, Program Director, Mrs. Carolyn L. Piper, Asst. Program Director, Dr. Barbara Mulach, Presidential Management Intern, GK–12 Program and Ms. Deborah A. Daniels, Senior Program Assistant, Division of Graduate Education, National Science Foundation, 4201 Wilson Blvd. Room 907N, Arlington, VA 22230. (703) 306–1697.

Purpose of Meeting: To provide advice and recommendations concerning proposals submitted to NSF for financial support.

Agenda: To review and evaluate applications submitted to the NSF–Graduate teaching Fellows in K–12 Education program as part of the selection process for awards.

Reason for Closing: The proposals being reviewed include information of a proprietary or confidential nature, including technical information, financial data, such as salaries, and personal information concerning individuals associated with the proposals. These matters are exempt under 5 U.S.C. 552b(c), (4) and (6) of the Government in the Sunshine Act.

Dated: May 17, 2000.

Karen J. York,

Committee Management Officer.

[FR Doc. 00–12829 Filed 5–19–00; 8:45 am]

BILLING CODE 7555–01–M

NATIONAL SCIENCE FOUNDATION

Special Emphasis Panel in Research, Evaluation and Communication; Notice of Meetings

In accordance with Federal Advisory Committee Act (Pub. L. 92–463, as amended), the National Science Foundation announces the following meetings:

Name: Special Emphasis Panel in Research, Evaluation and Communication (1210).

Date/Time:

July 6, 2000—Room 380 (8 a.m.–6 p.m.)
July 7, 2000—Room 380 (8 a.m.–6 p.m.)
July 17, 2000—Rooms 120, 130, 920 and 970 (2 p.m.–6 p.m.)
July 18, 2000—Rooms 120, 130, 920 and 970 (8 a.m.–6 p.m.)
July 19, 2000—Rooms 120, 130, 920 and 970 (8 a.m.–6 p.m.)

Place: National Science Foundation, 4201 Wilson Boulevard, Arlington, VA 22230.

Type of Meeting: Closed.

Contact Person: Nora Sabelli, Program Director, Research Evaluation and Communication Division, National Science Foundation, Room 855, 4201 Wilson Boulevard, Arlington, VA 22230. (703) 306–1650.

Purpose of Meeting: To provide advice and recommendations concerning proposals submitted to NSF for financial support.

Agenda: To review and evaluate IERI Proposals as part of the selection process for awards.

Reason for Closing: The proposals being reviewed include information of a proprietary or confidential nature, including technical information; financial data, such as salaries; and personal information concerning individuals associated with the proposals. These matters are exempt under 5 U.S.C. 552b(c), (4) and (6) of the Government in the Sunshine Act.

Dated: May 17, 2000.

Karen J. York,

Committee Management Officer.

[FR Doc. 00–12827 Filed 5–19–00; 8:45 am]

BILLING CODE 7555–01–M

NUCLEAR REGULATORY COMMISSION

[Docket No. 50–289]

Amergen Energy Company, LLC; Notice of Consideration of Issuance of Amendment to Facility Operating License, Proposed No Significant Hazards Consideration Determination, and Opportunity for a Hearing

The U.S. Nuclear Regulatory Commission (the Commission) is considering issuance of an amendment to Facility Operating License No. DPR–50 issued to AmerGen Energy Company, LLC, (the licensee) for operation of the Three Mile Island Nuclear Station, Unit 1 (TMI–1), located in Dauphin County, Pennsylvania.

The proposed amendment would remove the individual control building isolation and recirculation damper numbers from Technical Specification (TS) 4.12.1.3, and instead refer to the ''required'' dampers. The requirement to test these dampers remains the same. The Bases have been modified to indicate that the damper numbers for control building isolation and recirculation are contained in the Updated Final Safety Analysis Report (UFSAR).

Before issuance of the proposed license amendment, the Commission will have made findings required by the Atomic Energy Act of 1954, as amended (the Act) and the Commission's regulations.

The Commission has made a proposed determination that the amendment request involves no significant hazards consideration. Under the Commission's regulations in 10 CFR 50.92, this means that operation of the facility in accordance with the proposed amendment would not (1) Involve a significant increase in the probability or consequences of an accident previously evaluated; or (2) create the possibility of a new or different kind of accident from any accident previously evaluated; or (3) involve a significant reduction in a margin of safety. As required by 10 CFR 50.91(a), the licensee has provided its analysis of the issue of no significant hazards consideration, which is presented below:

1. Operation of the facility in accordance with the proposed amendment would not involve a significant increase in the probability of occurrence or the consequences of an accident previously evaluated. The proposed amendment is an administrative change which removes an unnecessary level of detail from the Technical Specifications, and is consistent with NRC Revised Standard Technical Specifications (NUREG–1430, Rev.1). The TMI Unit 1 UFSAR currently identifies and describes the control building isolation and recirculation dampers required for emergency operation and their design function. TMI Unit 1 control room habitability requirements are not affected. The proposed amendment does not affect the existing surveillance frequency or the operability requirements for the required dampers. Therefore, the proposed amendment has no affect on the probability of occurrence or the consequences of an accident previously evaluated.

2. Operation of the facility in accordance with the proposed amendment would not create the possibility of a new or different kind of accident from any previously evaluated. The proposed amendment is an administrative change which removes an unnecessary level of detail from the Technical Specifications, and is consistent with NRC Revised Standard Technical Specifications (NUREG–1430, Rev. 1). TMI Unit 1 control room habitability requirements are not affected. Therefore, the proposed amendment does not create the possibility of a new or different kind of accident from any previously evaluated.

3. Operation of the facility in accordance with the proposed amendment would not involve a significant reduction in a margin of safety. The proposed amendment is an administrative change which removes an unnecessary level of detail from the Technical Specifications, and is consistent with NRC Revised Standard Technical Specifications (NUREG–1430, Rev.1). The existing Technical Specification surveillance frequency and operability requirements for required isolation and recirculation dampers are maintained. Therefore, the proposed amendment does not reduce any margin of safety.

The NRC staff has reviewed the licensee's analysis and, based on this review, it appears that the three standards of 10 CFR 50.92(c) are satisfied. Therefore, the NRC staff proposes to determine that the amendment request involves no significant hazards consideration.

The Commission is seeking public comments on this proposed determination. Any comments received within 30 days after the date of publication of this notice will be considered in making any final determination.

Normally, the Commission will not issue the amendment until the expiration of the 30-day notice period. However, should circumstances change during the notice period such that failure to act in a timely way would result, for example, in derating or shutdown of the facility, the Commission may issue the license amendment before the expiration of the 30-day notice period, provided that its final determination is that the amendment involves no significant hazards consideration. The final determination will consider all public and State comments received. Should the Commission take this action, it will publish in the **Federal Register** a notice of issuance and provide for opportunity for a hearing after issuance. The Commission expects that the need to take this action will occur very infrequently.

Written comments may be submitted by mail to the Chief, Rules and Directives Branch, Division of Administrative Services, Office of Administration, U.S. Nuclear Regulatory Commission, Washington, DC 20555–0001, and should cite the publication date and page number of this **Federal Register** notice. Written comments may also be delivered to Room 6D59, Two White Flint North, 11545 Rockville Pike, Rockville, Maryland, from 7:30 a.m. to 4:15 p.m. Federal workdays. Copies of written comments received may be examined at the NRC Public Document Room, the Gelman Building, 2120 L Street, NW., Washington, DC.

The filing of requests for hearing and petitions for leave to intervene is discussed below.

By June 21, 2000, the licensee may file a request for a hearing with respect to issuance of the amendment to the subject facility operating license and any person whose interest may be affected by this proceeding and who wishes to participate as a party in the proceeding must file a written request for a hearing and a petition for leave to intervene. Requests for a hearing and a petition for leave to intervene shall be filed in accordance with the Commission's ''Rules of Practice for Domestic Licensing Proceedings'' in 10 CFR part 2. Interested persons should consult a current copy of 10 CFR 2.714 which is available at the Commission's Public Document Room, the Gelman Building, 2120 L Street, NW., Washington, DC, and accessible electronically through the ADAMS Public Electronic Reading Room link at the NRC Web site (http://www.nrc.gov). If a request for a hearing or petition for leave to intervene is filed by the above date, the Commission or an Atomic Safety and Licensing Board, designated by the Commission or by the Chairman of the Atomic Safety and Licensing Board Panel, will rule on the request and/or petition; and the Secretary or the designated Atomic Safety and Licensing

Board will issue a notice of hearing or an appropriate order.

As required by 10 CFR 2.714, a petition for leave to intervene shall set forth with particularity the interest of the petitioner in the proceeding, and how that interest may be affected by the results of the proceeding. The petition should specifically explain the reasons why intervention should be permitted with particular reference to the following factors: (1) The nature of the petitioner's right under the Act to be made party to the proceeding; (2) the nature and extent of the petitioner's property, financial, or other interest in the proceeding; and (3) the possible effect of any order which may be entered in the proceeding on the petitioner's interest. The petition should also identify the specific aspect(s) of the subject matter of the proceeding as to which petitioner wishes to intervene. Any person who has filed a petition for leave to intervene or who has been admitted as a party may amend the petition without requesting leave of the Board up to 15 days prior to the first prehearing conference scheduled in the proceeding, but such an amended petition must satisfy the specificity requirements described above.

Not later than 15 days prior to the first prehearing conference scheduled in the proceeding, a petitioner shall file a supplement to the petition to intervene which must include a list of the contentions which are sought to be litigated in the matter. Each contention must consist of a specific statement of the issue of law or fact to be raised or controverted. In addition, the petitioner shall provide a brief explanation of the bases of the contention and a concise statement of the alleged facts or expert opinion which support the contention and on which the petitioner intends to rely in proving the contention at the hearing. The petitioner must also provide references to those specific sources and documents of which the petitioner is aware and on which the petitioner intends to rely to establish those facts or expert opinion. Petitioner must provide sufficient information to show that a genuine dispute exists with the applicant on a material issue of law or fact. Contentions shall be limited to matters within the scope of the amendment under consideration. The contention must be one which, if proven, would entitle the petitioner to relief. A petitioner who fails to file such a supplement which satisfies these requirements with respect to at least one contention will not be permitted to participate as a party.

Those permitted to intervene become parties to the proceeding, subject to any limitations in the order granting leave to intervene, and have the opportunity to participate fully in the conduct of the hearing, including the opportunity to present evidence and cross-examine witnesses.

If a hearing is requested, the Commission will make a final determination on the issue of no significant hazards consideration. The final determination will serve to decide when the hearing is held.

If the final determination is that the amendment request involves no significant hazards consideration, the Commission may issue the amendment and make it immediately effective, notwithstanding the request for a hearing. Any hearing held would take place after issuance of the amendment.

If the final determination is that the amendment request involves a significant hazards consideration, any hearing held would take place before the issuance of any amendment.

A request for a hearing or a petition for leave to intervene must be filed with the Secretary of the Commission, U.S. Nuclear Regulatory Commission, Washington, DC 20555–0001, Attention: Rulemakings and Adjudications Staff, or may be delivered to the Commission's Public Document Room, the Gelman Building, 2120 L Street, NW., Washington, DC, by the above date. A copy of the petition should also be sent to the Office of the General Counsel, U.S. Nuclear Regulatory Commission, Washington, DC 20555–0001, and to Edward J. Cullen, Jr., Esquire, PECO Energy Company, 2301 Market Street (S23–1), Philadelphia, PA 19103, attorney for the licensee.

Nontimely filings of petitions for leave to intervene, amended petitions, supplemental petitions and/or requests for hearing will not be entertained absent a determination by the Commission, the presiding officer or the presiding Atomic Safety and Licensing Board that the petition and/or request should be granted based upon a balancing of the factors specified in 10 CFR 2.714(a)(1)(i)-(v) and 2.714(d).

For further details with respect to this action, see the application for amendment dated May 4, 2000, as supplemented May 9, 2000, which are available for public inspection at the Commission's Public Document Room, the Gelman Building, 2120 L Street, NW., Washington, DC, and accessible electronically through the ADAMS Public Electronic Reading Room link at the NRC Web site (http://www.nrc.gov).

Dated at Rockville, Maryland, this 16th day of May 2000.

For the Nuclear Regulatory Commission.

Timothy G. Colburn,

Senior Project Manager, Section 1, Project Directorate I, Division of Licensing Project Management, Office of Nuclear Reactor Regulation.

[FR Doc. 00–12765 Filed 5–19–00; 8:45 am]

BILLING CODE 7590–01–P

OFFICE OF PERSONNEL MANAGEMENT

Excepted Service

AGENCY: Office of Personnel Management.

ACTION: Notice.

SUMMARY: This gives notice of positions placed or revoked under Schedules A and B, and placed under Schedule C in the excepted service, as required by Civil Service Rule VI, Exceptions from the Competitive Service.

FOR FURTHER INFORMATION CONTACT: Suzy Barker, Staffing Reinvention Office, Employment Service, (202) 606–0830.

SUPPLEMENTARY INFORMATION: The Office of Personnel Management published its last monthly notice updating appointing authorities established or revoked under the Excepted Service provisions of 5 CFR 213 on Monday, April 10, 2000 (65 FR 19034). Individual authorities established or revoked under Schedules A and B and established under Schedule C between March 1, 2000, and March 31, 1999, appear in the listing below. Future notices will be published on the fourth Tuesday of each month, or as soon as possible thereafter. A consolidated listing of all authorities as of June 30 will also be published.

Schedule A

The following Schedule A authority was established during the month of March:

U.S. Chemical Safety and Hazard Investigations Board

Up to 37 positions established to create the Chemical Safety and Hazard Investigations Board. No new appointments may be made under this authority after December 31, 2000. Effective March 20, 2000.

No Schedule A authorities were revoked during the month of March 2000.

Schedule B

The following Schedule B authority was established during the month of March 2000:

Department of Treasury

Positions, grades GS–5 through 9, of Treasury Enforcement Agent in the Bureau of Alcohol, Tobacco, and Firearms; and Treasury Enforcement Agent, Pilot, Marine Enforcement Officer, and Aviation Enforcement Officer in the U.S. Customs Service. Service under this authority may not exceed 3 years. Effective March 20, 2000.

No Schedule B authorities were revoked during the month of March 2000.

Schedule C

The following Schedule C authorities were established during March 2000:

Department of Agriculture

Confidential Assistant to the Administrator, Animal and Plant Inspection Service. Effective March 9, 2000.

Confidential Assistant to the Director, Legislative Affairs and Public Affairs Staff. Effective March 9, 2000.

Confidential Assistant to the Administrator, External Affairs Staff. Effective March 21, 2000.

Deputy Press Secretary to the Press Secretary. Effective March 21, 2000.

Confidential Assistant to the Administrator, Rural Utilities Service. Effective March 21, 2000.

Confidential Assistant to the Administrator, Inspection, Packers and Stockyards Administration. Effective March 24, 2000.

Department of Commerce

Special Assistant to the Director, Office of Public Affairs. Effective March 10, 2000.

Special Assistant to the Director, Office of Public Affairs and Press Secretary. Effective March 14, 2000.

Special Assistant to the Director, Office of Sustainable Development and Intergovernmental Affairs. Effective March 15, 2000.

Department of Defense

Director, Cooperative Threat Reduction to the Assistant Secretary of Defense (Strategy and Threat Reduction). Effective March 31, 2000.

Department of Education

Confidential Assistant to the Deputy Assistant Secretary, Office of Intergovernmental and Interagency Affairs. Effective March 8, 2000.

Confidential Assistant to the Director, Scheduling and Briefing Staff. Effective March 15, 2000.

Confidential Assistant to the Chief of Staff. Effective March 16, 2000.

Deputy Director, Scheduling and Briefing Staff to the Director Scheduling and Briefing Staff. Effective March 28, 2000.

Special Assistant to the Assistant Secretary, Office of Vocational and Adult Education. Effective March 30, 2000.

Department of Energy

Special Assistant to the Deputy Assistant Secretary for Transportation Technologies. Effective March 2, 2000.

Staff Assistant to the Assistant Secretary for Energy Efficiency and Renewable Energy. Effective March 8, 2000.

Special Assistant to the Director, Office of Economic Impact and Diversity. Effective March 8, 2000.

Special Assistant to the Director, Office of Scheduling and Advance. Effective March 16, 2000.

Special Assistant to the Director, Office of Scheduling and Advance. Effective March 17, 2000.

Special Assistant to the Director, Scheduling and Briefing. Effective March 28, 2000.

Deputy Assistant Secretary for Intergovernmental and External Affairs to the Principal Deputy Assistant Secretary for Congressional and Intergovernmental Affairs. Effective March 30, 2000.

Department of Health and Human Services

Confidential Assistant (Scheduling) to the Director of Scheduling and Advance. Effective March 2, 2000.

Director of Speechwriting to the Deputy Assistant Secretary for Public Affairs (Media). Effective March 16, 2000.

Department of Housing and Urban Development

Special Assistant to the Advisor for Management Reform and Operations. Effective March 8, 2000.

Director, Office of Insured Health Care Facilities to the Assistant Secretary for Housing—Federal Housing Commissioner. Effective March 16, 2000.

Senior Intergovernmental Relations Officer to the Deputy

Assistant Secretary for Intergovernmental Relations. Effective March 17, 2000.

Department of Justice

Secretary (Office Automation) to the United States Attorney General, Nevada. Effective March 7, 2000.

Special Assistant to the Director, Violence Against Women Office. Effective March 8, 2000.

Special Assistant to the Assistant Attorney General. Effective March 14, 2000.

Department of Labor

Special Assistant to the Director, Office of Public Liaison. Effective March 15, 2000.

Intergovernmental Officer to the Assistant Secretary for Congressional and Intergovernmental Affairs. Effective March 22, 2000.

Chief of Staff to the Assistant Secretary, Office of Congressional and Intergovernmental Affairs. Effective March 22, 2000.

Associate Director to the Assistant Secretary for Congressional and Intergovernmental Affairs. Effective March 24, 2000.

Special Assistant to the Deputy Secretary of Labor. Effective March 24, 2000.

Department of State

Foreign Affairs Officer to the Under Secretary for Global Affairs. Effective March 7, 2000.

Special Assistant to the Chief of Protocol. Effective March 16, 2000.

Foreign Affairs Officer to the Deputy Director. Effective March 31, 2000.

Department of Transportation

Special Assistant to the Deputy Assistant Secretary for Transportation Policy. Effective March 15, 2000.

Department of Veterans Affairs

Special Assistant to the Chief of Staff. Effective March 2, 2000.

Environmental Protection Agency

Special Assistant to the Deputy Administrator. Effective March 10, 2000.

National Aeronautics and Space Administration

Public Affairs Specialist to the Associate Administrator for Public Affairs. Effective March 30, 2000.

Occupational Safety and Health Review Commission

Confidential Assistant to the Member (Commissioner), Occupational Safety and Health Review Commission. Effective March 8, 2000.

Office of Management and Budget

Public Affairs Specialist to the Associate Director for Communication. Effective March 17, 2000.

Office of National Drug Control Policy

Staff Assistant to the Director, Office of National Drug Control Policy. Effective March 16, 2000.

Staff Assistant to the Deputy Director, Supply Reduction. Effective March 23, 2000.

Securities and Exchange Commission

Secretary to the Director, Office of Compliance Inspections and Examinations. Effective March 15, 2000.

Small Business Administration

Senior Advisor for Communications and Public Liaison to the Associate Administrator for Marketing and Customer Service. Effective March 9, 2000.

Press Officer and Senior Advisor to the Assistant Administrator for Public Communications. Effective March 27, 2000.

U.S. International Trade Commission

Staff Assistant to the Commissioner. Effective March 8, 2000.

Authority: 5 U.S.C. 3301 and 3302; E.O. 10577, 3 CFR 1954–1958 Comp., P.218

Office of Personnel Management.

Janice R. Lachance,

Director.

[FR Doc. 00–12685 Filed 5–19–00; 8:45 am]

BILLING CODE 6325–01–P

OFFICE OF PERSONNEL MANAGEMENT

Federal Prevailing Rate Advisory Committee; Open Committee Meetings

According to the provisions of section 10 of the Federal Advisory Committee Act (Pub. L. 92–463), notice is hereby given that meetings of the Federal Prevailing Rate Advisory Committee will be held on—

Thursday, May 25, 2000
Thursday, June 8, 2000
Thursday, June 22, 2000

The meetings will start at 10 a.m. and will be held in Room 5A06A, Office of Personnel Management Building, 1900 E Street NW, Washington, DC.

The Federal Prevailing Rate Advisory Committee is composed of a Chair, five representatives from labor unions holding exclusive bargaining rights for Federal blue-collar employees, and five representatives from Federal agencies. Entitlement to membership on the Committee is provided for in 5 U.S.C. 5347.

The Committee's primary responsibility is to review the Prevailing Rate System and other matters pertinent to establishing prevailing rates under subchapter IV, chapter 53, 5 U.S.C., as amended, and from time to time advise the Office of Personnel Management.

This scheduled meeting will start in open session with both labor and management representatives attending. During the meeting either the labor members or the management members may caucus separately with the Chair to devise strategy and formulate positions. Premature disclosure of the matters discussed in these caucuses would unacceptably impair the ability of the Committee to reach a consensus on the matters being considered and would disrupt substantially the disposition of its business. Therefore, these caucuses will be closed to the public because of a determination made by the Director of the Office of Personnel Management under the provisions of section 10(d) of the Federal Advisory Committee Act (Pub. L. 92–463) and 5 U.S.C. 552b(c)(9)(B). These caucuses may, depending on the issues involved, constitute a substantial portion of a meeting.

Annually, the Chair compiles a report of pay issues discussed and concluded recommendations. These reports are available to the public, upon written request to the Committee's Secretary.

The public is invited to submit material in writing to the Chair on Federal Wage System pay matters felt to be deserving of the Committee's attention. Additional information on this meeting may be obtained by contacting the Committee's Secretary, Office of Personnel Management, Federal Prevailing Rate Advisory Committee, Room 5559, 1900 E Street NW, Washington, DC 20415; (202) 606–1500.

Dated: May 10, 2000.

John F. Leyden,

Chairman, Federal Prevailing Rate Advisory Committee.

[FR Doc. 00–12689 Filed 5–19–00; 8:45 am]

BILLING CODE 6325–01–P

OFFICE OF PERSONNEL MANAGEMENT

Science and Technology (S&T) Laboratory Personnel Management Demonstration Project, Department of the Army, U.S. Army Engineer Research & Development Center (ERDC)

AGENCY: U.S. Office of Personnel Management (OPM).

ACTION: Notice of change to reduction-in-force (RIF) procedures to recognize performance based on the average of the last three annual performance scores in the most recent 4-year period as a criterion to establish retention registers.

SUMMARY: 5 U.S.C. 4703 authorizes OPM to conduct demonstration projects that experiment with new and different personnel management concepts to determine whether such changes in personnel policy or procedures would result in improved Federal personnel management.

Public Law 103–337, October 5, 1994, permits the Department of Defense (DoD), with the approval of OPM, to carry out personnel demonstration projects at S&T Reinvention Laboratories. This notice identifies a revision to the ERDC plan where an average of three annual performance scores is used instead of a single performance score to determine an employee's retention standing in a reduction in force.

DATES: This revision to the ERDC demonstration project will be implemented May 22, 2000.

FOR FURTHER INFORMATION CONTACT:

ERDC: Dr. C.H. Pennington, U.S. Army Engineer Research & Development Center, ATTN: CEERD–ZT–E, 3909 Halls Ferry Road, Vicksburg, Mississippi 39180–6199, phone 601–634–3549.

OPM: Ms. Joan M. Jorgenson, U. S. Office of Personnel Management, 1900 E Street NW Room 7458, Washington, DC 20415, phone 202–606–1315.

SUPPLEMENTARY INFORMATION:

1. Background

OPM approved and published the final plan in the **Federal Register** for the following S&T Reinvention Laboratory Demonstration Project.

A. U.S. Army Engineer Waterways Experiment Station (WES) final publication on Tuesday, March 3, 1998, Volume 63, Number 41, Part IV.

WES correction and re-publication on Wednesday, March 25, 1998, Volume 63, Number 57, Part V.

B. Publication of amendment to expand coverage of the WES project to include the Construction Engineering Research Laboratory, Cold Regions Research & Engineering Laboratory, and Topographic Engineering Center. Published in the **Federal Register** on Friday, October 16, 1998, Volume 63, Number 200, Part V.

Note: The WES demonstration project was renamed the ERDC demonstration project following consolidation of the Army Corps of Engineers' laboratories.

C. Publication of an amendment to include competitive examining and Distinguished Scholastic Achievement Appointment authorities as part of the ERDC plan. Published in the **Federal Register** on Thursday, March 11, 1999, Volume 64, Number 47, Part II.

This demonstration project involves simplified job classification, pay banding, a performance-based compensation system, employee development provisions, and modified RIF procedures.

2. Overview

The action to combine all Corps of Engineers laboratories into the ERDC and expand coverage of the WES Personnel Management Demonstration Project to the entire ERDC prompted a review of the provisions of the project to assure acceptance by all levels of management, employees, and bargaining units. The review revealed that the best interests of all involved would be better served by revising the manner in which performance is recognized in RIF procedures to allow for performance based on a longer period than that represented by a single performance score.

Dated: May 9, 2000.

Office of Personnel Management.

Janice R. Lachance,

Director.

I. Executive Summary

The Department of the Army established the personnel management demonstration projects to be generally similar to the system in use at the Navy personnel demonstration project known as China Lake. The projects and this amendment are built upon the concepts of linking performance to pay for all covered positions; simplifying paperwork in the processing of classification and other personnel actions; emphasizing partnerships among management, employees, and unions; and delegating other authorities to line managers.

II. Introduction

The demonstration project at the ERDC attempts to provide managers with the authority, control and flexibility to achieve quality laboratories and quality products. These goals are met by employing the best candidates and ensuring the best employees are retained in the event of a reduction in force. The purpose of this amendment is to revise the procedures to recognize employee performance in establishing retention registers by basing the criterion on the average of the last three annual performance scores in the most recent 4-year period instead of the last single performance score. This considers employee performance over a longer period of time. Other basic provisions of the approved plan are unchanged.

III. Personnel System Changes

This project is built upon the concepts of linking performance to pay, simplifying paperwork in the processing of classification and other personnel actions, emphasizing partnerships among management, employees and unions, and delegating certain authorities to line managers. Pay for performance is accomplished by assigning a numerical score to an employee's performance at the end of the annual rating cycle and using the score to determine the employee's pay increase. Currently, the score is also used to determine in part an employee's retention standing in the event of a reduction in force. For RIF purposes, this amendment proposes instead to recognize employee performance by averaging the last three performance scores rather than using only the last performance score.

The **Federal Register**, Volume 63, Number 57, dated March 25, 1998, Section III.H.2. (Retention), page 14593, first paragraph, first sentence, is amended to read as follows:

Retention registers will be established based on the following criteria listed in order of priority: Tenure status (Tenure I—career, Tenure II—career conditional, Tenure III—modified term); veterans' preference; the average of the last three annual employee performance scores in the most recent 4-year period; and service computation date.

The use of three performance scores recognizes that an employee's performance may vary from one year to the next because of unforeseen circumstances such as an illness, relocation, a change in workload, or reorganization. The amendment incorporates the recommendations of management, employees and unions, ensures the very best employees are retained in the event of a RIF, and continues to support the objectives of the ERDC personnel management demonstration project.

[FR Doc. 00–12688 Filed 5–19–00; 8:45 am]

BILLING CODE 6325–01–P

POSTAL SERVICE

Privacy Act of 1974, Systems of Records

AGENCY: Postal Service.

ACTION: Notice of amendments to existing systems of records.

SUMMARY: The purpose of this document is to publish notice of amendments to two Privacy Act systems of records. The amendments conform to a rule change published in the **Federal Register** on January 25, 2000 (65 FR 3857–3859), amending Postal Service regulations that govern the disclosure of information contained in PS Form 1093, Application for Post Office Box or Caller Service, and PS Form 1583, Application for Delivery of Mail Through Agent. Information collected by these forms is covered by Privacy Act systems of records USPS 010.020, Collection and Delivery Records—Boxholder Records, and USPS 010.050, Collection and Delivery Records—Delivery of Mail Through Agents, respectively, for which changes are proposed by this notice.

DATES: Any interested party may submit written comments on the proposed addition and modification. This proposal will become effective without further notice on June 21, 2000, unless comments received on or before that date result in a contrary determination.

ADDRESSES: Written comments on this proposal should be mailed or delivered to Administration and FOIA, United States Postal Service, 475 L'Enfant Plaza SW, RM 8141, Washington, DC 20260–5202. Copies of all written comments will be available at the above address for public inspection and photocopying between 8 a.m. and 4 p.m., Monday through Friday.

FOR FURTHER INFORMATION CONTACT: Betty Sheriff, (202) 268–2608.

SUPPLEMENTARY INFORMATION: Information about customers who use post office box service is maintained within Privacy Act system of records USPS 010.020, Collection and Delivery Records—Boxholder Records. In the past, the Postal Service has disclosed to the general public, upon request, the name, address, and telephone number of the holder of a post office box being used for the purpose of doing or soliciting business with the public. To provide a greater degree of privacy and security to the growing number of small business owners who operate out of their homes, that provision has been repealed. As a result, routine use No. 1 is deleted. The rule change referenced above also repeals a provision allowing disclosure of boxholder information in response to oral requests from law enforcement agencies made through the Postal Inspection Service, in the course of a criminal investigation, necessitating the deletion of routine use No. 4. The remaining routine use Nos. 2, 3, and 5 are redesignated as routine uses 1 through 3, respectively, and the ''Note'' preceding them is amended to delete the explanation as to when copies of PS Form 1093 may be provided (now incorporated into the routine use) and to succeed the routine uses as an exception. Under the exception, disclosure is not authorized by the routine uses if the individual boxholder has filed a protective order with the postmaster, unless the party seeking the information submits an order of a court of competent jurisdiction requiring disclosure.

Information about customers who use commercial mail receiving agency (CMRA) services, and the agents who provide those services, is maintained within Privacy Act system of records USPS 010.050, Collection and Delivery Records—Delivery of Mail Through Agents. Each applicant for delivery of mail to a CMRA is required to complete and sign PS Form 1583, Application for Delivery of Mail Through Agent. Information collected by PS Form 1583 includes the name, address, and telephone number of the agent and the addressee and, drivers license, or other forms of identification. In addition, the owner or manager of a CMRA is required to complete PS Form 1583–A, Application to Act as a Commercial Mail Receiving Agency, which includes the owner/manager's home address and telephone number. This notice amends the categories of records segment of the system notice to note the collection of additional information as a result of revision of PS Form 1583 and adoption of the new PS Form 1583–A.

Consistent with past practice, information provided by a CMRA customer on PS Form 1583 will not be available to the public. A review of the general routine uses (those applied to most Postal Service systems of records to enable the routine conduct of postal business) applied to system of records USPS 010.050 has resulted in the deletion of three routine uses. These routine uses permit disclosure to: an auditor of Postal Service finances, the Office of Management and Budget for review of private relief legislation, and labor organizations for collective bargaining purposes. Since such disclosures of information covered by this system should be unnecessary for those purposes, the routine uses are deleted. Under the remaining routine uses, the Postal Service will not disclose the name or address of a customer who has submitted an appropriate court order of protection unless the requester obtains an order of a court of competent jurisdiction that requires the disclosure notwithstanding the existence of the protective order.

In addition to the above, the Purpose statement for system USPS 010.050 is enhanced by adding objectives directly related to the longstanding purpose for which records in this system are collected.

The amendments proposed by this notice are not expected to diminish individual privacy rights. In fact, the amendments are intended to enhance the privacy of small business owners operating out of the home and of individuals such as battered individuals and stalking victims who feel they may be at risk of harm if their physical location is not kept private. In the interest of those protections, certain routine uses have been deleted to reduce the number of situations in which disclosure may be made outside of the Postal Service and to strengthen assurances of privacy.

Pursuant to 5 U.S.C. 552a(e)(11), interested persons are invited to submit written data, views, or arguments on this proposal. A report of the amendments has been sent to Congress and to the Office of Management and Budget for their evaluation.

For the above reasons, the Postal Service proposes the following amendments. USPS Privacy Act system 010.020 was last published in its entirety in the **Federal Register** on October 26, 1989 (54 FR 43658–43659), and amended on October 11, 1990 (55 FR 41398–41399), and on February 23, 1999 (64 FR 8878). USPS 010.050 was last published in its entirety in the **Federal Register** on October 26, 1989 (54 FR 43660–43661), and amended on May 3, 1994 (59 FR 2284), and on February 23, 1999 (64 FR 8878).

USPS 010.020

SYSTEM NAME:

Collection and Delivery Records—Boxholder Records, 010.020.

* * * * *

ROUTINE USES OF RECORDS MAINTAINED IN THE SYSTEM, INCLUDING CATEGORIES OF USERS AND THE PURPOSES OF SUCH USES:

[CHANGE TO READ:]

General routine use statements a, b, c, d, e, f, g, h, j, and m listed in the prefatory statement at the beginning of the Postal Service's published system notices apply to this system. A copy of PS Form 1093 may be furnished pursuant to any of the general routine uses. Other routine uses are as follows:

1. Subject to the exception noted below, disclosure of boxholder information may be made to a federal, state, or local government agency upon prior written certification that the information is required for the performance of its duties. A copy of PS Form 1093 may be furnished.

2. Subject to the exception noted below, the name or address of the holder of a post office box may be disclosed to a person empowered to serve legal process, or the attorney for a party in whose behalf service will be made, or a party who is acting *pro se,* on receipt of written information that meets prescribed certification requirements. A copy of the PS Form 1093 will not be furnished.

3. Subject to the exception noted below, disclosure of boxholder information may be made, on prior written certification from a foreign government agency citing the relevance of the information to an indication of a violation or potential violation of law and its responsibility for investigating or prosecuting such violation, and only if the address is (a) outside the United States and its territories, and (b) within the territorial boundaries of the requesting foreign government. A copy of PS Form 1093 may be furnished.

Exception: Information concerning an individual boxholder who has filed an appropriate protective court order with the postmaster will not be disclosed under any routine use except pursuant to the order of a court of competent jurisdiction.

USPS 010.050

SYSTEM NAME:

Collection and Delivery Records—Delivery of Mail Through Agents, 010.050.

* * * * *

CATEGORIES OF RECORDS IN THE SYSTEM:

Records contain the name, address, and telephone number of the agent and of the addressee, the signatures of both parties, and copies of forms of identification of the addressee.

* * * * *

PURPOSE(S):

[CHANGE TO READ:]

a. Serves as the written authority for delivery of mail to the addressee's agent.

b. Promotes security of the mail.

c. Protects postal customers from mail fraud and identity theft.

ROUTINE USES OF RECORDS MAINTAINED IN THE SYSTEM, INCLUDING CATEGORIES OF USERS AND THE PURPOSES OF SUCH USES:

[CHANGE TO READ:]

General routine use statements a, b, c, d, e, f, and g listed in the prefatory statement at the beginning of the Postal Service's published system notices apply to this system. Other routine uses are as follows:

1. Information may be disclosed for the purpose of identifying an address as an address of an agent to whom mail is delivered on behalf of other persons. This routine use does not authorize the disclosure of the identities of persons on behalf of whom agents receive mail.

Exception: Information concerning an individual who has filed an appropriate protective court order with the postmaster will not be disclosed under any of the general routine uses except

pursuant to the order of a court of competent jurisdiction.

* * * * *

Stanley F. Mires,

Chief Counsel, Legislative.

[FR Doc. 00–12780 Filed 5–19–00; 8:45 am]

BILLING CODE 7710–12–P

SECURITIES AND EXCHANGE COMMISSION

[Release No. 34–42780; File No. SR–CBOE–00–17].

Self-Regulatory Organizations; Proposed Rule Change by Chicago Board Options Exchange, Incorporated Relating to Designation of Financial/Operations Principals

May 12, 2000.

Pursuant to Section 19(b)(1) of the Securities Exchange Act of 1934 (''Act'')[1] and Rule 19b–4 thereunder,[2] notice is hereby given that on April 11, 2000, the Chicago Board Options Exchange, Incorporated (''CBOE'' or ''Exchange'') filed with the Securities and Exchange Commission (''Commission'') the proposed rule change as described in Items I, II, and III below, which Items have been prepared by the CBOE. The Commission is publishing this notice to solicit comments on the proposed rule from interested persons.

I. Self Regulatory Organization's Statement of the Terms of Substance of the Proposed Rule

The CBOE proposes to require each CBOE member subject to Commission Rule 15c3–1 (the ''net capital rule'') to designate a Financial/Operations Principal (''FINOP'') and to register the FINOP with the Exchange. Below is the text of the proposed rule change. Proposed new language is in italics; proposed deletions are in brackets.

* * * * *

RULE 2.22—Other Fees or Charges

(a) No change.

(b) Registration Fees. Member organizations (*and individual members, if applicable,*) shall pay application, maintenance and transfer registration fees for *their* Series 7 qualified Registered Representatives (''RR'') as described in Rule 9.3, *[and] their* Registered Options Principals (''ROP'') as described in Rule 9.2 *and their Financial/Operations Principals (''FINOP'') as described in rule 3.6A.* The fees are listed below:

(i) For each new RR, [or] ROP *or FINOP* applicant—$35.00

(ii) For the maintenance of each RR, [or] ROP *or FINOP* Registration–$30.00/*year*[.]

(iii) For an RR or ROP who transfers from another organization, *or a FINOP who transfers from another organization and does not maintain any other FINOP registrations*—$30.00

* * * * *

Qualification and Registration of Certain Associated Persons

RULE 3.6A. (a) Financial/Operations Principal. Each individual member or member organization subject to Exchange Act Rule 15c3–1 shall designate a Financial/Operations Principal. The duties of a Financial/Operations Principal shall include taking appropriate actions to assure that the member complies with applicable financial and operational requirements under the Rules and the Exchange Act, including but not limited to those requirements relating to the submission of financial reports and the maintenance of books and records. Each Financial/Operations Principal is required to have successfully completed the Financial and Operations Principal Examination (Series 27 Exam). Each Financial/Operations Principal designated by a member shall be registered in that capacity with the Exchange in a form and manner prescribed by the Exchange. A Financial/Operations Principal of a member may be a full-time employee of the member, or with the prior written approval of the Exchange, may be a part-time employee or independent contractor of the member.

(b) *Associated Person Statuses Under Chapter IX. Associated person statuses under Chapter IX (along with the primary Exchange Rule concerning the status) include: (i) Registered Options Principal (Rule 9.2); (ii) Registered Representative (Rule 9.3); (iii) Senior Registered Options Principal (Rule 9.8); and (iv) Compliance Registered Options Principal (Rule 9.8).*

. . . Interpretations and Policies:

.01 Each person in an associated person status enumerated in paragraph (a) or (b) of this Rule shall, in a form and manner prescribed by the Exchange (i) submit to the Exchange a Uniform Application for Securities industry Registration or Transfer (Form U–4) and (ii) promptly submit to the Exchange any required amendments to Form U–4.

.02 Any member that discharges or terminates the employment or retention of an associated person enumerated in paragraph (a) or (b) of this Rule shall comply with the termination filing requirements set forth in Rule 9.3(b) and Rule (9.3(c).

.03 Each person in an associated person status enumerated in paragraph (a) or (b) of this Rule is required to satisfy the continuing educations requirements set forth in Rule 9.3A.

II. Self-Regulatory Organization's Statement of the Purpose of, and Statutory Basis for, the Proposed Rule Change

In its filing with the Commission, the CBOE included statements concerning the purpose of and basis for the proposed rule change and discussed any comments it received on the proposed rule change. The text of these statements may be examined at the places specified in Item IV below. The CBOE has prepared summaries, set forth in Sections A, B, and C below, of the most significant aspects of such statements.

A. Self-Regulatory Organization's Statement of the Purpose of, and Statutory Basis for, the Proposed Rule Change

1. Purpose

The purpose of the proposed rule change is to require each individual member or member organization subject to Exchange Act Rule 15c3–1, the net capital rule,[3] to designate a FINOP and to register the FINOP with the Exchange. The Exchange proposes to include this requirement in proposed new CBOE Rule 3.6A,''Qualification and Registration of Certain Associated Persons.''

Proposed Rule 3.6A provides that the duties of a FINOP include taking appropriate actions to ensure that the member complies with applicable financial and operational requirements under the CBOE's Rules and the Act, including but not limited to requirements relating to the submission of financial reports and the maintenance of books and records. Additionally, each FINOP would be required to complete successfully the Financial and Operations Principal Examination (Series 27 Exam). Each FINOP designated by a member would also be required to be registered in that capacity with the Exchange in a form and manner prescribed by the Exchange.

Proposed Rule 3.6A also provides that a FINOP of a member could be a full-time employee of the member or, with the prior written approval of the

[1] 15 U.S.C. 78s(b)(1).

[2] 17 CFR 240.19b–4.

[3] 17 CFR 240.15c3–1. Certain options market makers are not subject to the net capital rule, *see* 17 CFR 240.15c3–1(b)(1)(i), and therefore are not subject to proposed CBOE Rule 3.6A.

Exchange, a part-time employee or independent contractor of the member.[4]

The Exchange states that its proposal to require designation of a FINOP is comparable to requirements of other securities self-regulatory organizations, such as the New York Stock Exchange, Inc. and the National Association of Securities Dealers, Inc.

The Exchange also states that it intends to monitor firms for compliance with the requirements relating to FINOPs during the course of the Exchange's financial examination program for CBOE member organizations for which CBOE is the designated examining authority.

To promote ease of reference by CBOE members, the Exchange also proposes to set forth in Rule 3.6A and its Interpretations certain existing requirements with respect to associated persons required to be registered with the Exchange under Chapter IX of CBOE's Rules. Accordingly, Rule 3.6A(b) lists the persons that have associated person status under Chapter IX, and cross-references the primary CBOE Rule concerning each of those persons. These persons include Registered Options Principals with Rule 9.2 as the primary CBOE rule, Registered Representatives (Rule 9.3), Senior Registered Options Principals (Rule 9.8), and Compliance Registered Options Principals (Rule 9.8).

The Interpretations to Rule 3.6A reference certain existing requirements applicable to individuals having associated person status under Chapter IX and provide that these requirements shall be applicable to each FINOP. Thus, Interpretation .01 provides that each person having associated person status as described in Rule 3.6A (including a FINOP) shall, in a form and manner prescribed by the Exchange, submit to the Exchange a Uniform Application for Securities Industry Registration or Transfer (Form U–4) and promptly submit to the Exchange any required amendments to Form U–4. Interpretation .02 provides that any member that discharges or terminates the employment or retention of an associated person enumerated in Rule 3.6A shall comply with the termination filing requirements set forth in CBOE Rules 9.3(b) and 9.3(c).[5] Interpretation .03 provides that each associated person enumerated in Rule 3.6A is required to satisfy the continuing education requirements set forth in CBOE Rule 9.3A.

The Exchange will allow members subject to Rule 15c3–1 under the Act six months from the date of approval of this rule filing by the Commission in which to designate a FINOP in accordance with Rule 3.6A. The purpose of that time period is to provide the Exchange with an opportunity to notify the Exchange's membership of the new requirement and to provide members that do not currently employ or retain an individual who functions as a FINOP a reasonable period of time in which to employ or retain such an individual.

The Exchange also proposes to amend existing CBOE Rule 2.22(b) to assess application, maintenance, and transfer registration fees with respect to the designation of FINOPs. These fees would be the same as those that the Exchange assesses on Registered Representatives and Registered Options Principals under Rule 2.22(b).[6] Thus, the fee for each new FINOP designated by a member is proposed to be $35.00, the annual maintenance fee for each FINOP registration is proposed to be $30.00 per year, and the transfer fee for a FINOP who transfers from another organization and does not maintain any other FINOP registration is proposed to be $30.00. Each member organization (or individual member, if applicable) would have to pay a registration fee for a FINOP, regardless of whether the FINOP also acts in that capacity for another firm.

2. Statutory Basis

The Exchange states that the proposed rule change would enhance compliance with financial and operational requirements under CBOE's Rules and the Act and make it easier for the Exchange's membership to reference registration requirements under CBOE's Rules. Accordingly, the proposed rule is consistent with Section 6(b) of the Act,[7] in general, and furthers the objectives of Section 6(b)(5),[8] in particular, in that it is designed to promote just and equitable principles of trade, to prevent fraudulent and manipulative acts and practices, and to protect investors and the public interest. The proposed rule change also would further the objectives of Section 6(b)(4) of the Act[9] in that it is designed to provide for the equitable allocation of reasonable dues, fees, and other charges among CBOE members.

B. Self-Regulatory Organization's Statement on Burden on Competition

The CBOE does not believe that the proposed rule change would impose any burden on competition not necessary or appropriate in furtherance of the purposes of the Act.

C. Self-Regulatory Organization's Statement on Comments on the Proposed Rule Change Received From Members, Participants, or Others

No written comments were solicited or received with respect to the proposed rule change.

III. Date of Effectiveness of the Proposed Rule Change and Timing for Commission Action

The CBOE represents that the proposed rule change (i) would not significantly affect the protection of investors or the public interest, (ii) would not impose any significant burden on competition, and (iii) would not become operative for 30 days from the date it was filed. In addition, the Exchange provided the Commission with written notice of its intent to file the proposed rule change, along with a description and text of the proposed rule change, at least five business days prior to the date of filing of the proposed rule change. For the foregoing reasons, this rule filing qualifies for expedited approval as a ''non-controversial'' rule change under Section 19(b)(3)(A) of the Act[10] and Rule 19b–4(f)(6)[11] thereunder and will become operative 30 days from April 11, 2000, the date on which it was filed.

At any time within 60 days of the filing of the proposed rule change, the Commission may summarily abrogate the rule change if it appears to the Commission that such action is necessary or appropriate in the public interest, for the protection of investors, or otherwise in furtherance of the purposes of the Act.

IV. Solicitation of Comments

Interested persons are invited to submit written data, views, and arguments concerning the foregoing, including whether the proposed rule

[4] The Commission interprets the term ''associated person'' to include any independent contractor, consultant, franchisee, or other person providing services to a broker-dealer equivalent to those service provided by persons specifically referenced in the Act. Accordingly, a FINOP is an associated person of a firm, making the FINOP and the firm subject to all requirements that accompany associated person status, regardless of the nature of the employment relationship or contractual relationship between the FINOP and the firm.

[5] The requirements set forth in CBOE Rules 9.3(b) and 9.3(c) relate to the filing of a Uniform Termination Notice for Securities Industry Registration (Form U–5) and the filing of required amendments to Form U–5.

[6] The fees applicable to Registered Representatives and Registered Options Principals were last raised in 1999. *See* Exchange Act Release No. 41,748 (Aug. 16, 1999); 64 FR 46,218 (Aug. 24, 1999).

[7] 17 U.S.C. 78f(b).

[8] 17 U.S.C. 78f(b)(5).

[9] 17 U.S.C. 78f(b)(4).

[10] 15 U.S.C. 78s(b)(3)(A).

[11] 17 CFR 240.19b–4(f)(6).

change is consistent with the Act. Persons making written submissions should file six copies thereof with the Secretary, Securities and Exchange Commission, 450 Fifth Street, NW, Washington, DC 20549–0609. Copies of the submission, all subsequent amendments, all written statements with respect to the proposed rule change that are filed with the Commission, and all written communications relating to the proposed rule change between the Commission and any person, other than those that may be withheld from the public in accordance with the provisions of 5 U.S.C. 552, will be available for inspection and copying in the Commission's Public Reference Room. Copies of such filing will also be available for inspection and copying at the principal office of the CBOE. All submissions should refer to File No. SR–CBOE–00–17 and should be submitted by June 6, 2000.

For the Commission, by the Division of Market Regulation, pursuant to delegated authority.[12]

Margaret H. McFarland,

Deputy Secretary.

[FR Doc. 00–12759 Filed 5–19–00; 8:45 am]

BILLING CODE 8010–01–M

SECURITIES AND EXCHANGE COMMISSION

[Release No. 34–42783: File No. SR–NASD–00–05]

Self-Regulatory Organizations; Order Granting Approval to Proposed Rule Change by the National Association of Securities Dealers, Inc. Relating to the Release of Disciplinary Information

May 15, 2000.

I. Introduction

On February 16, 2000, the National Association of Securities Dealers, Inc. (''NASD'' or ''Association''), through its wholly owned subsidiary NASD Regulation, Inc. (''NASD Regulation''), filed with the Securities and Exchange Commission (''SEC'' or ''Commission''), pursuant to Section 19(b)(1) of the Securities Exchange Act of 1934 (''Act'')[1] and Rule 19b–4 thereunder,[2] a proposed rule change to amend IM–8310–2 of the Association, to provide for the publication of all final, litigated decisions issued by the Office of Hearing Officers (''OHO''),[3] the National Ad judicatory Council (''NAC''), and the NASD Board, regardless of sanctions imposed.

The proposed rule change was published for comment in the **Federal Register** on April 11, 2000.[4] No comments were received on the proposal. This order approves the proposal.

II. Description of the Proposal

Some NASD disciplinary decisions are currently available in electronic legal research databases, such as Westlaw, Lexis-Nexis, and Books on Screen. Interpretative Material 8310–2 (the ''Interpretation'') permits the NASD to release any disciplinary decision: (1) Imposing a suspension, cancellation or expulsion of a member; (2) imposing a suspension or revocation of the registration of any associated person; (3) imposing a suspension or barring a member or associated person from association with all members; (4) imposing monetary sanctions of $10,000 or more on a member or associated person; (5) containing on alleged violation of a Designated Rule; or (6) deemed by the President of NASD Regulation to involve a significant policy or enforcement determination where the release of information would be in the public interest.

The Association is proposing to amend the Interpretation to provide for the publication of all final, litigated decisions issued by the OHO, the NAC, and the NASD Board, regardless of sanctions imposed. However, the names of the parties and other identifying information mentioned in the decisions that do not meet the current enumerated publication criteria, as outlined in the Interpretation (listed above), will be redacted from these decisions. Settlements, Letters of Acceptance, Waivers and Consents (''AWCs''), and Minor Rule Violation Plan letters are excluded from this proposal. The proposed rule change will not have any impact on the information contained in or disclosed by the Central Registration Depository system. The NASD will make available all decisions covered under this proposal that were issued after August 7, 1997, the effective date of the most recent significant changes to the NASD Code of Procedure.[5]

III. Discussion

The Commission finds that the proposal is consistent with Section 15A(b)(6) of the Act,[6] which requires, among other things, that the rules of an association be designed to prevent fraudulent and manipulative acts and practices, to promote just and equitable principles of trade, and, in general, to protect investors and the public interest. In particular, the Commission finds that the proposal is consistent with Section 15A(b)(7) of the Act[7] in that it works to adequately safeguard the interest of investors while establishing fair rules for its members and persons associated with its members.

The Commission believes that providing the public with this expanded information on disciplinary decisions will provide a clearer picture of the Association's current application and interpretation of its substantive and procedural rules. The NASD will make the information available to vendors of legal research databases. Members will have additional insight into how NASD rules are enforced, making it easier for them to comply with the rules.

It is therefore ordered, pursuant to Section 19(b)(2) of the Act,[8] that the proposed rule change (SR–NASD–00–05) is approved. The NASD will announce the effective date of this rule in a Notice to Members to be published within 60 days of the date on this order. The effective date will be 30 days following publication of the Notice to Members announcing Commission approval.

For the Commission, by the Division of Market Regulation, pursuant to delegated authority.[9]

Margaret H. McFarland,

Deputy Secretary.

[FR Doc. 00–12758 Filed 5–19–00; 8:45 am]

BILLING CODE 8010–01–M

SMALL BUSINESS ADMINISTRATION

[Declaration of Disaster #3253]

State of California

Los Angeles County and the contiguous counties of Kern, Orange, San Bernardino, and Ventura in the State of California constitute a disaster area as a result of severe storms that occurred on April 18, 2000. Applications for loans for physical damage as a result of this disaster may be filed until the close of business on July 10, 2000 and for economic injury until the close of business on February 9, 2001 at the address listed below or other locally announced locations: U.S. Small Business Administration, Disaster

[12] 17 CFR 200.30–3(a)(12).

[1] 15 U.S.C. 78s(b)(1).

[2] 17 CFR 240.19b–4.

[3] The OHO issues decisions rendered by Hearing Officers (default decisions) and Hearing Panels.

[4] Securities Exchange Act Release No. 42607 (April 3, 2000), 65 FR 19421.

[5] *See* Special NASD Notice to Member 97–55 (August 1997).

[6] 15 U.S.C. 78–*o* 3(b)(6).

[7] 15 U.S.C. 78–*o* 3(b)(7).

[8] 15 U.S.C. 78s(b)(2).

[9] 17 CFR 200.30–3(a)(12).

Area 4 Office, P.O. Box 13795, Sacramento, CA 95853–4795.

The interest rates are:

For Physical Damage

Homeowners with credit available elsewhere: 7.625%

Homeowners without credit available elsewhere: 3.812%

Businesses with credit available elsewhere: 8.000%

Businesses and non-profit organizations without credit available elsewhere: 4.000%

Others (including non-profit organizations) with credit available elsewhere: 6.750%

For Economic Injury

Businesses and small agricultural cooperatives without credit available elsewhere: 4.000%

The numbers assigned to this disaster are 325311 for physical damage and 9H3200 for economic injury.

(Catalog of Federal Domestic Assistance Program Nos. 59002 and 59008)

Dated: May 9, 2000.

Kris Swedin,

Acting Administrator.

[FR Doc. 00–12692 Filed 5–19–00; 8:45 am]

BILLING CODE 8025–01–P

SMALL BUSINESS ADMINISTRATION

[Declaration of Economic Injury Disaster #9H25]

State of Connecticut (and Contiguous Counties in the State of Rhode Island)

New London County and the contiguous counties of Hartford, Middlesex, Tolland, and Windham in Connecticut, and Kent and Washington Counties in Rhode Island constitute an economic injury disaster loan area as a result of a fire that occurred on March 6, 2000 in the Village of Mystic, in the Town of Groton. Eligible small businesses and small agricultural cooperatives without credit available elsewhere may file applications for economic injury assistance as a result of this disaster until the close of business on February 2, 2001 at the address listed below or other locally announced locations: U.S. Small Business Administration, Disaster Area 1 Office, 360 Rainbow Blvd, South, 3rd Floor, Niagara Falls, NY 14303.

The interest rate for eligible small businesses and small agricultural cooperatives is 4 percent.

The economic injury number for the State of Rhode Island is 9H2600.

(Catalog of Federal Domestic Assistance Program No. 59002)

Dated: May 8, 2000.

Kris Swedin,

Acting Administrator.

[FR Doc. 00–12693 Filed 5–19–00; 8:45 am]

BILLING CODE 8025–01–P

SMALL BUSINESS ADMINISTRATION

[Declaration of Disaster #3252]

State of Kansas

As a result of the President's major disaster declaration on May 3, 2000, I find that Crawford, Labette, and Neosho Counties in the State of Kansas constitute a disaster area due to damages caused by severe storms and tornadoes that occurred April 19–20, 2000. Applications for loans for physical damage as a result of this disaster may be filed until the close of business on July 2, 2000, and for loans for economic injury until the close of business on February 5, 2001 at the address listed below or other locally announced locations: U.S. Small Business Administration, Disaster Area 3 Office, 4400 Amon Carter Blvd., Suite 102, Fort Worth, TX 76155.

In addition, applications for economic injury loans from small businesses located in the following contiguous counties may be filed until the specified date at the above location: Allen, Bourbon, Cherokee, Montgomery, Wilson, and Woodson Counties in Kansas; Barton, Jasper, and Vernon Counties in Missouri; and Craig and Nowata Counties in Oklahoma.

The interest rates are:

For Physical Damage

Homeowners with credit available elsewhere: 7.625%

Homeowners without credit available elsewhere: 3.812%

Businesses with credit available elsewhere: 8.000%

Businesses and non-profit organizations without credit available elsewhere: 4.000%

Others (including non-profit organizations) with credit available elsewhere: 6.750%

For Economic Injury

Businesses and small agricultural cooperatives without credit available elsewhere: 4.000%

The number assigned to this disaster for physical damage is 325212. For economic injury the numbers are 9H2200 for Kansas, 9H2300 for Missouri, and 9H2400 for Oklahoma.

Dated: May 8, 2000.

(Catalog of Federal Domestic Assistance Program Nos. 59002 and 59008)

Herbert L. Mitchell,

Acting Associate Administrator for Disaster Assistance.

[FR Doc. 00–12694 Filed 5–19–00; 8:45 am]

BILLING CODE 8025–01–P

SMALL BUSINESS ADMINISTRATION

Region III Advisory Council Meeting; Public Meeting

The South Atlantic States, Regulatory Fairness Board will hold a public hearing on June 22, 2000, at Morgan State University, Main Lecture Hall, Schaefer Building, located at 5200 Perring Parkway, Room 241, Baltimore, Maryland to receive comments and testimony from small businesses and representatives of trade associations concerning federal regulatory enforcement or compliance activities. Transcripts of these proceedings will be posted on the Internet. These transcripts are subject only to limited review by the National Ombudsman. For further information, call Elestine Harvey (312) 353–0880.

Bettie Baca,

Counselor to the Administrator/Public Liaison.

[FR Doc. 00–12691 Filed 5–19–00; 8:45 am]

BILLING CODE 8025–01–P

SOCIAL SECURITY ADMINISTRATION

Finding Regarding the Social Insurance System of Bosnia and Herzegovina

AGENCY: Social Security Administration.

ACTION: Notice of finding regarding the Social Insurance System of Bosnia and Herzegovina.

FINDING: Section 202(t)(1) of the Social Security Act (42 U.S.C. 402(t)(1)) prohibits payment of monthly benefits to any individual who is not a United States citizen or national for any month after he or she has been outside the United States for 6 consecutive months, and prior to the first month thereafter for all of which the individual has been in the United States. This prohibition does not apply to such an individual where one of the exceptions described in sections 202(t)(2) through 202(t)(5) of the Social Security Act (42 U.S.C. 402(t)(2) through 402(t)(5)) affects his or her case.

Section 202(t)(2) of the Social Security Act provides that, subject to certain residency requirements of section 202(t)(11), the prohibition

against payment shall not apply to any individual who is a citizen of a country which the Commissioner of Social Security finds has in effect a social insurance system which is of general application in such country and which:

(a) Pays periodic benefits, or the actuarial equivalent thereof, on account of old age, retirement, or death; and

(b) Permits individuals who are United States citizens but not citizens of that country and who qualify for such benefits to receive those benefits, or the actuarial equivalent thereof, while outside the foreign country regardless of the duration of the absence.

The Commissioner of Social Security has delegated the authority to make such a finding to the Associate Commissioner for International Programs. Under that authority, the Associate Commissioner for International Programs has approved a finding that Bosnia and Herzegovina, as of April 7, 1992, has social insurance systems of general application which:

(a) Pay periodic benefits, or the actuarial equivalent thereof, on account of old age, retirement, or death; and

(b) Permit United States citizens who are not citizens of Bosnia and Herzegovina and who qualify for the relevant benefits to receive those benefits, or their actuarial equivalent, while outside of Bosnia or Herzegovina, regardless of the duration of the absence of these individuals from Bosnia and Herzegovina.

On April 7, 1992, the United States recognized the independence of Bosnia and Herzegovina. Before that time, it was considered to be part of the former Socialist Federal Yugoslav Republic which had a system that was determined to meet section 202(t)(2) of the Social Security Act as of March 25, 1959.

Although it was ascertained at the time of independence that the old Yugoslav law was still in effect in Bosnia and Herzegovina, it could not be determined to what extent the war had affected the actual operation of the social insurance system (as contact with appropriate foreign officials was not possible at that time). Thus, citizens of Bosnia and Herzegovina receiving U.S. Social Security benefits under the social insurance exception had their payments suspended in 1995 pending a decision as to whether the system continued to meet the provisions of section 202(t)(2) as of April 7, 1992.

Since March 1994, the country of Bosnia and Herzegovina has been comprised of two territories, the Federation of Bosnia and Herzegovina and the Republic of Srpska. The country of Bosnia and Herzegovina had in effect as of April 7, 1992, a social insurance system which met the requirements of section 202(t)(2) of the Social Security Act (42 U.S.C. 402(t)(2)). The Federation of Bosnia and Herzegovina had in effect as of August 1, 1998, a social insurance system which met the requirements of section 202(t)(2) of the Social Security Act and the Republic of Srpska had in effect, as of January 1, 1994, a social insurance system which met the requirements of section 202(t)(2) of the Social Security Act. The Federation and the Republic are part of the country of Bosnia and Herzegovina and their social insurance systems are derived from, and replaced, the national social insurance system.

FOR FURTHER INFORMATION CONTACT: Donna Powers, Room 1104, West High Rise Building, P.O. Box 17741, 6401 Security Boulevard, Baltimore, MD 21235; (410) 965–3568.

(Catalog of Federal Domestic Assistance: Program Nos. 96.001 Social Security—Disability Insurance; 96.002 Social Security—Retirement Insurance; 96.004 Social Security—Survivors Insurance)

Dated: May 05, 2000.

Joseph A. Gribbin,

Associate Commissioner for International Programs.

[FR Doc. 00–12684 Filed 5–19–00; 8:45 am]

BILLING CODE 4191–02–U

HEALTH AND HUMAN SERVICES

Social Security Administration

Privacy Act of 1974, as Amended; Correction to Existing System of Records

AGENCY: Social Security Administration (SSA).

ACTION: Notice of a minor non-substantive change to an existing system of record.

SUMMARY: In accordance with the provisions of the Privacy Act (5 U.S.C. 552a(e)(4) and (e)(11)), we are issuing public notice of our intent to make a minor non-substantive change to an existing system of records entitled the Supplemental Security Income Record and Special Veterans Benefits(SSR/SVB), SSA/OSR, 60–0103. We invite public comments on this proposal.

DATES: These changes are effective May 22, 2000.

ADDRESSES: Interested individuals may comment on this publication by writing to the SSA Privacy Officer, Social Security Administration, 3–F–1 Operations Building, 6401 Security Boulevard, Baltimore, MD 21235–6401. All comments received will be available for public inspection at the above address.

FOR FURTHER INFORMATION CONTACT: Ms. Pamela McLaughlin, Social Insurance Program Specialist, Social Security Administration, Room 3–C–2 Operations Building, 6401 Security Boulevard, Baltimore, MD 21235–6401, telephone (410) 965–3677.

SUPPLEMENTARY INFORMATION: The Supplemental Security Income Record and Special Veterans Benefits(SSR/SVB), SSA/OSR, 60–0103 maintains eligibility information about applicants and recipients of payments under titles VIII and XVI of the Social Security Act. (See the Categories of individuals covered by the system and Categories of records in the system in the notice below for a complete description of the individuals and records covered by the system of records.) The information maintained includes ''income'' data which in some cases could constitute ''returns or return information'' within the scope of the Internal Revenue Code (IRC), as amended.

We, therefore, are amending the section of the **Federal Register** notice of the SSR/SVB system of records entitled Routine uses of records maintained in the system, including categories of users and the purposes of such uses to indicate that any information maintained in this system will not be disclosed unless disclosure is authorized by the IRC.

Darrell Blevins,

SSA Privacy Officer.

60–0103

SYSTEM NAME:

Supplemental Security Income Record and Special Veterans Benefits, SSA/OSR.

SECURITY CLASSIFICATION:

None.

SYSTEM LOCATION:

Social Security Administration, Office of Telecommunications and Systems Operations, 6401 Security Boulevard, Baltimore, MD 21235.

Records also may be located in the Social Security Administration (SSA) Regional and field offices (individuals should consult their local telephone directories for address information).

CATEGORIES OF INDIVIDUALS COVERED BY THE SYSTEM:

This file contains a record for each individual who has applied for supplemental security income (SSI) payments, including individuals who have requested an advance payment;

SSI recipients who have been overpaid; and ineligible persons associated with an SSI recipient. This file also covers those individuals who have applied for and who are entitled to the Special Veterans Benefits (SVB) under title VIII of the Social Security Act. (This file does not cover applicants who do not have a Social Security number (SSN).)

CATEGORIES OF RECORDS IN THE SYSTEM:

This file contains data regarding SSI eligibility; citizenship; residence; Medicaid eligibility; eligibility for other benefits; alcoholism or drug addiction data, if applicable (disclosure of this information may be restricted by 21 U.S.C. 1175 and 42 U.S.C. 290dd–3 and ee–3); income data; resources; payment amounts, including overpayment amounts and date and amount of advance payments; living arrangements; case folder location data; appellate decisions, if applicable; SSN used to identify a particular individual, if applicable; information about representative payees, if applicable; and a history of changes to any of the persons who have applied for SSI payments. For eligible individuals, the file contains basic identifying information, income and resources (if any) and, in conversion cases, the State welfare number.

THIS FILE ALSO CONTAINS INFORMATION ABOUT APPLICANTS FOR SVB:

The information maintained in this system of records is collected from the applicants for title VIII SVB, and other systems of records maintained by SSA. The information maintained includes a data element indicating this is a title VIII SVB claim. It will also include: Identifying information such as the applicant's name, Social Security number (SSN) and date of birth (DOB); telephone number (if any); foreign and domestic addresses; the applicant's sex; income data, payment amounts (including overpayment amounts); and other information provided by the applicant relative to his or her entitlement for SVB.

If the beneficiary has a representative payee, this system of records includes data about the representative payee such as the payee's SSN; employer identification number, if applicable; and mailing address.

AUTHORITY FOR MAINTENANCE OF THE SYSTEM:

Sections 1602, 1611, 1612, 1613, 1614, 1615, 1616, 1631, 1633, 1634 of title XVI and title VIII of the Social Security Act (the Act).

PURPOSE(S):

SSI records begin in Social Security field offices where an individual or couple files an application for SSI payments. SVB records begin in Social Security field offices and Veterans Affairs Regional Office (VARO) where an individual files an application for SVB payments. The SSI and SVB applications contain data which may be used to prove the identity of the applicant, to determine his/her eligibility for SSI or SVB payments and, in cases where eligibility is determined, to compute the amount of the payment. Information from the application, in addition to data used internally to control and process SSI and SVB cases, is used to create the Supplemental Security Income Record (SSR). The SSR also is used as a means of providing a historical record of all activity on a particular individual's or couple's record.

In addition, statistical data are derived from the SSR for actuarial and management information purposes.

ROUTINE USES OF RECORDS MAINTAINED IN THE SYSTEM, INCLUDING CATEGORIES OF USERS AND THE PURPOSES OF SUCH USES:

Disclosure may be made for routine uses as indicated below. However, disclosure of any information constituting 'returns or return information' within the scope of the Internal Revenue Code will not be disclosed unless disclosure is authorized by that statute.

(1) To the Department of the Treasury to prepare SSI, Energy Assistance, and SVB checks to be sent to claimants or beneficiaries.

(2) To the States to establish the minimum income level for computation of State supplements.

(3) To the following Federal and State agencies to prepare information for verification of benefit eligibility under section 1631(e) of the Act: Bureau of Indian Affairs; Office of Personnel Management; Department of Agriculture; Department of Labor; Immigration and Naturalization Service; Internal Revenue Service; Railroad Retirement Board; State Pension Funds; State Welfare Offices; State Worker's Compensation; Department of Defense; United States Coast Guard; and Department of Veterans Affairs.

(4) To a congressional office in response to an inquiry from that office made at the request of the subject of a record.

(5) To the appropriate State agencies (or other agencies providing services to disabled children) to identify title XVI eligibles under the age of 16 for the consideration of rehabilitation services in accordance with section 1615 of the Act, 42 U.S.C. 1382d.

(6) To contractors under contract to SSA or under contract to another agency with funds provided by SSA for the performance of research and statistical activities directly relating to this system of records.

(7) To State audit agencies for auditing State supplementation payments and Medicaid eligibility consideration.

(8) To State agencies to effect and report the fact of Medicaid eligibility of title XVI recipients in the jurisdiction of those States which have elected Federal determinations of Medicaid eligibility of title XVI eligibles and to assist the States in administering the Medicaid program.

(9) To State agencies to identify title XVI eligibles in the jurisdiction of those States which have not elected Federal determinations of Medicaid eligibility in order to assist those States in establishing and maintaining Medicaid rolls and in administering the Medicaid program.

(10) To State agencies to enable those agencies which have elected Federal administration of their supplementation programs to monitor changes in applicant/recipient income, special needs, and circumstances.

(11) To State agencies to enable those agencies which have elected to administer their own supplementation programs to identify SSI eligibles in order to determine the amount of their monthly supplementary payments.

(12) To State agencies to enable them to assist in the effective and efficient administration of the SSI program.

(13) To State agencies to enable those which have an agreement with SSA to carry out their functions with respect to Interim Assistance Reimbursement pursuant to section 1631(g) of the Act.

(14) To State agencies to enable them to locate potentially eligible individuals and to make eligibility determinations for extensions of social services under the provisions of title XX of the Act.

(15) To State agencies to assist them in determining initial and continuing eligibility in their income maintenance programs and for investigation and prosecution of conduct subject to criminal sanctions under these programs.

(16) To the United States Postal Service for investigating the alleged theft, forgery or unlawful negotiation of SSI and SVB checks.

(17) To the Department of the Treasury for investigating the alleged theft, forgery or unlawful negotiation of SSI and SVB checks.

(18) To the Department of Education for determining the eligibility of applicants for Basic Educational Opportunity Grants.

(19) To Federal, State or local agencies (or agents on their behalf) for administering cash or non-cash income maintenance or health maintenance programs (including programs under the Act). Such disclosures include, but are not limited to, release of information to:

(a) The Department of Veterans Affairs (DVA) upon request for determining eligibility for, or amount of, DVA benefits or verifying other information with respect thereto in accordance with 38 U.S.C. 5106;

(b) The RRB for administering the Railroad Unemployment Insurance Act;

(c) State agencies to determine eligibility for Medicaid;

(d) State agencies to locate potentially eligible individuals and to make determinations of eligibility for the food stamp program;

(e) State agencies to administer energy assistance to low income groups under programs for which the States are responsible; and

(f) Department of State and its agents to assist SSA in administering the Social Security Act in foreign countries, the American Institute on Taiwan and its agents to assist in administering the Social Security Act in Taiwan, the VA, Philippines Regional Office and its agents to assist in administering the Social Security Act in the Philippines, and the Department of Interior and its agents to assist in administering the Social Security Act in the Northern Mariana Islands.

(20) To IRS, Department of the Treasury, as necessary, for the purpose of auditing SSA's compliance with safeguard provisions of the Internal Revenue Code (IRC) of 1986, as amended.

(21) To the Office of the President for the purpose of responding to an individual pursuant to an inquiry received from that individual or a third party on his/her behalf.

(22) Upon request, information on the identity and location of aliens may be disclosed to the DOJ (Criminal Division, Office of Special Investigations) for the purpose of detecting, investigating and, where necessary, taking legal action against suspected Nazi war criminals in the United States.

(23) To third party contacts such as private collection agencies and credit reporting agencies under contract with SSA and State motor vehicle agencies for the purpose of their assisting SSA in recovering overpayments.

(24) Information may be disclosed to contractors and other Federal agencies, as necessary, for the purpose of assisting SSA in the efficient administration of its programs. We contemplate disclosing information under this routine use only in situations in which SSA may enter a contractual or similar agreement with a third party to assist in accomplishing an agency function relating to this system of records.

(25) Non-tax return information which is not restricted from disclosure by Federal law may be disclosed to General Services Administration and National Archives and Records Administration (NARA) for the purpose of conducting records management studies with respect to their duties and responsibilities under 44 U.S.C. 2904 and 2906, as amended by NARA Act of 1984.

(26) To the DOJ, a court or other tribunal, or another party before such tribunal when:

(a) SSA, any component thereof,

(b) Any SSA employee in his/her official capacity;

(c) Any SSA employee in his/her individual capacity where DOJ (or SSA where it is authorized to do so) has agreed to represent the employee; or

(d) The United States or any agency thereof where SSA determines that the litigation is likely to affect the operations of SSA or any of its components is a party to litigation or has an interest in such litigation, and SSA determines that the use of such records by DOJ, the court, or other tribunal, is relevant and necessary to the litigation, provided, however, that in each case, SSA determines that such disclosure is compatible with the purpose for which the records were collected.

Wage and other information which are subject to the disclosure provisions of the IRC (26 U.S.C. 6103) will not be disclosed under this routine use unless disclosure is expressly permitted by the IRC.

(27) To representative payees, when the information pertains to individuals for whom they serve as representative payees, for the purpose of assisting SSA in administering its representative payment responsibilities under the Act and assisting the representative payees in performing their duties as payees, including receiving and accounting for benefits for individuals for whom they serve as payees.

(28) To third party contacts (e.g., employers and private pension plans) in situations where the party to be contacted has, or is expected to have, information relating to the individual's capability to manage his/her affairs or his/her eligibility for, or entitlement to, benefits under the Social Security program when:

(a) The individual is unable to provide information being sought. An individual is considered to be unable to provide certain types of information when:

(i) He/she is incapable or of questionable mental capability;

(ii) He/she cannot read or write;

(iii) He/she cannot afford the cost of obtaining the information;

(iv) He/she has a hearing impairment, and is contacting SSA by telephone through a telecommunications relay system operator;

(v) A language barrier exists; or

(vi) The custodian of the information will not, as a matter of policy, provide it to the individual; or

(b) The data are needed to establish the validity of evidence or to verify the accuracy of information presented by the individual, and it concerns one or more of the following:

(i) His/her eligibility for benefits under the Social Security program;

(ii) The amount of his/her benefit payment; or

(iii) Any case in which the evidence is being reviewed as a result of suspected fraud, concern for program integrity, quality appraisal, or evaluation and measurement activities.

(29) To Rehabilitation Services Administration (RSA) for use in its program studies of, and development of enhancements for, State vocational rehabilitation programs. These are programs to which applicants or beneficiaries under titles II and or XVI of the Act may be referred. Data released to RSA will not include any personally identifying information (such as names or SSNs).

(30) Addresses of beneficiaries who are obligated on loans held by the Secretary of Education or a loan made in accordance with 20 U.S.C. 1071, *et. seq.* (the Robert T. Stafford Student Loan Program) may be disclosed to the Department of Education as authorized by section 489A of the Higher Education Act of 1965.

(31) To student volunteers and other workers, who technically do not have the status of Federal employees, when they are performing work for SSA as authorized by law, and they need access to personally identifiable information in SSA records in order to perform their assigned Agency functions.

(32) To Federal, State, and local law enforcement agencies and private security contractors, as appropriate, if information is necessary:

(a) To enable them to protect the safety of SSA employees and customers, the security of the SSA workplace and the operation of SSA facilities, or

(b) To assist investigations or prosecutions with respect to activities that affect such safety and security or activities that disrupt the operation of SSA facilities.

(33) Corrections to information that resulted in erroneous inclusion of individuals in the Death Master File (DMF) may be disclosed to recipients of erroneous DMF information.

(34) Information as to whether an individual is alive or deceased may be disclosed pursuant to section 1106(d) of the Social Security Act (42 U.S.C. 1306(d)), upon request, for purposes of an epidemiological or similar research project, provided that:

(a) SSA determines in consultation with the Department of Health and Human Services, that the research may reasonably be expected to contribute to a national health interest;

(b) The requester agrees to reimburse SSA for the costs of providing the information; and

(c) the requester agrees to comply with any safeguards and limitations specified by SSA regarding rerelease or redisclosure of the information.

POLICIES AND PRACTICES FOR STORING, RETRIEVING, ACCESSING, RETAINING AND DISPOSING OF RECORDS IN THE SYSTEM:

STORAGE:

Records are maintained in magnetic media (*e.g.,* magnetic tape) and in microform and microfiche form.

RETRIEVABILITY:

Records are indexed and retrieved by SSN.

SAFEGUARDS:

System security for automated records has been established in accordance with the Systems Security Handbook. This includes maintaining all magnetic tapes and magnetic disks within an enclosure attended by security guards. Anyone entering or leaving that enclosure must have special badges which are only issued to authorized personnel. All authorized personnel having access to the magnetic records are subject to the penalties of the Privacy Act. The microfiche are stored in locked cabinets, and are accessible to employees only on a need-to-know basis. All SSR State Data Exchange records are protected in accordance with agreements between SSA and the respective States regarding confidentiality, use, and redisclosure.

RETENTION AND DISPOSAL

Original input transaction tapes received which contain initial claims and posteligibility actions are retained indefinitely although these are processed as received and incorporated into processing tapes which are updated to the master SSR tape file on a monthly basis. All magnetic tapes appropriate to SSI information furnished to specified Federal, State, and local agencies for verification of eligibility for benefits and under section 1631(e) are retained, in accordance with the PA accounting requirements, for at least 5 years or the life of the record, whichever is longer.

SYSTEM MANAGER(S) AND ADDRESS:

Director, Division of Supplemental Security Income Systems, Office of Systems Requirements, Social Security Administration, 6401 Security Boulevard, Baltimore, MD 21235.

NOTIFICATION PROCEDURE:

An individual can determine if this system contains a record about him/her by writing to or visiting any Social Security field office and providing his or her name and SSN. (Individuals should consult their local telephone directories for Social Security office address and telephone information.) Applicants for SVB who reside in the Philippines should contact VARO, Philippines. (Furnishing the SSN is voluntary, but it will make searching for an individual's record easier and prevent delay.)

An individual requesting notification of records in person need not furnish any special documents of identity. Documents he/she would normally carry on his/her person would be sufficient (e.g., credit cards, driver's license, or voter registration card). An individual requesting notification via mail or telephone must furnish a minimum of his/her name, date of birth and address in order to establish identity, plus any additional information specified in this section. These procedures are in accordance with SSA Regulations (20 CFR 401.40(c)).

RECORD ACCESS PROCEDURES:

Same as notification procedures. Requesters should also reasonably specify the record contents being sought. An individual who requests notification of, or access to, a medical record shall, at the time he or she makes the request, designate in writing a responsible representative who will be willing to review the record and inform the subject individual of its contents at the representative's discretion. A parent or guardian who requests notification of, or access to, a minor's medical record shall at the time he or she makes the request designate a physician or other health professional (other than a family member) who will be willing to review the record and inform the parent or guardian of its contents at the physician's or health professional's discretion. These procedures are in accordance with SSA Regulations (20 CFR 401.40(c) and 401.55).

CONTESTING RECORD PROCEDURES:

Same as notification procedures. Requesters should also reasonably identify the record, specify the information they are contesting and state the corrective action sought and the reasons for the correction with supporting justification showing how the record is incomplete, untimely, inaccurate or irrelevant. These procedures are in accordance with SSA Regulations (20 CFR 401.65).

RECORD SOURCE CATEGORIES:

Data contained in the SSR are obtained for the most part from the applicant for SSI and SVB payments and are derived from the Claims Folders System (60–0089) and the Modernized Supplemental Security Income Claims System. The States and other Federal agencies such as the Department of Veterans Affairs also provide data affecting the SSR.

SYSTEMS EXEMPTED FROM CERTAIN PROVISIONS OF THE PRIVACY ACT:

None.

[FR Doc. 00–12591 Filed 5–19–00; 8:45 am]

BILLING CODE 4190–11–U

DEPARTMENT OF STATE

[Public Notice 3316]

Office of Defense Trade Controls; Notifications to the Congress of Proposed Commercial Export Licenses

AGENCY: Department of State.

ACTION: Notice.

SUMMARY: Notice is hereby given that the Department of State has forwarded the attached Notifications of Proposed Export Licenses to the Congress on the dates shown on the attachments pursuant to section 36(c) and in compliance with section 36(e) of the Arms Export Control Act (22 U.S.C. 2776).

EFFECTIVE DATE: As shown on each of the nine letters.

FOR FURTHER INFORMATION CONTACT: Mr. William J. Lowell, Director, Office of Defense Trade Controls, Bureau of Political-Military Affairs, Department of State (202–663–2700).

SUPPLEMENTARY INFORMATION: Section 38(e) of the Arms Export Control Act mandates that notifications to the Congress pursuant to section 36(c) must be published in the **Federal Register** when they are transmitted to Congress or as soon thereafter as practicable.

Dated: May 15, 2000.

William J. Lowell,

Director, Office of Defense Trade Controls, U.S. Department of State.

United States Department of State,
Washington, DC 20520, April 14, 2000.

Dear Mr. Speaker: Pursuant to Section 36(c)&(d) of the Arms Export Control Act, I am transmitting herewith certification of a proposed license for the export of defense articles or defense services sold commercially under a contract in the amount $50,000,000 or more.

The transaction contained in the attached certification involves the export to Saudi Arabia of 16 search and rescue helicopters for government end-use.

The United States Government is prepared to license the export of these items having taken into account political, military, economic, human rights, and arms control considerations.

More detailed information is contained in the formal certification which, though unclassified, contains business information submitted to the Department of State by the applicant, publication of which could cause competitive harm to the United States firm concerned.

Sincerely,
Barbara Larkin,
Assistant Secretary, Legislative Affairs.

Enclosure: Transmittal No. DTC 002–00

The Honorable J. Dennis Hastert, Speaker of the House of Representatives.

United States Department of State,
Washington, D.C. 20520, April 14, 2000.

Dear Mr. Speaker: Pursuant to Section 36(c) of the Arms Export Control Act, I am transmitting, herewith, certification of a proposed license for the export of defense articles or defense services sold commercially under a contract in the amount $50,000,000 or more.

The transaction contained in the attached certification involves the export of ship engineering and design services to Egypt for a new Fast Patrol Boat for the Egyptian Navy.

The United States Government is prepared to license the export of these items having taken into account political, military, economic, human rights, and arms control considerations.

More detailed information is contained in the formal certification which, though unclassified, contains business information submitted to the Department of State by the applicant, publication of which could cause competitive harm to the United States firm concerned.

Sincerely,
Barbara Larkin,
Assistant Secretary, Legislative Affairs.

Enclosure: Transmittal No. DTC 004–00

The Honorable J. Dennis Hastert, Speaker of the House of Representatives.

United States Department of State,
Washington, D.C. 20520, April 14, 2000.

Dear Mr. Speaker: Pursuant to Section 36(c) of the Arms Export Control Act, I am transmitting herewith certification of a proposed license for the export of defense articles or defense services sold commercially under a contract in the amount $50,000,000 or more.

The transaction contained in the attached certification involves the export of technical information, defense services and defense articles to Japan for the manufacture, overhaul and repair of fuel control components for the F100–PW–220 engine on Japanese Defense Agency's F–15J aircraft.

The United States Government is prepared to license the export of these items having taken into account political, military, economic, human rights, and arms control considerations.

More detailed information is contained in the formal certification which, though unclassified, contains business information submitted to the Department of State by the applicant, publication of which could cause competitive harm to the United States firm concerned.

Sincerely,
Barbara Larkin,
Assistant Secretary, Legislative Affairs.

Enclosure: Transmittal No. DTC 005–00

The Honorable J. Dennis Hastert, Speaker of the House of Representatives.

United States Department of State,
Washington, D.C. 20520, April 14, 2000.

Dear Mr. Speaker: Pursuant to Section 36(c) of the Arms Export Control Act, I am transmitting herewith certification of a proposed license for the export of defense articles or defense services sold commercially under a contract in the amount $50,000,000 or more.

The transaction contained in the attached certification involves the export technical data and information to Japan for the manufacture of AN/TPX–46(V)–(V)6, AN/TPX–46(V)7 and AB/TPX–46A(V)7 IFF Interrogators for the Japanese Government.

The United States Government is prepared to license the export of these items having taken into account political, military, economic, human rights, and arms control considerations.

More detailed information is contained in the formal certification which, though unclassified, contains business information submitted to the Department of State by the applicant, publication of which could cause competitive harm to the United States firm concerned.

Sincerely,
Barbara Larkin,
Assistant Secretary, Legislative Affairs.

Enclosure: Transmittal No. DTC 006–00

The Honorable J. Dennis Hastert, Speaker of the House of Representatives.

United States Department of State,
Washington, DC 20520, April 14, 2000.

Dear Mr. Speaker: Pursuant to Sections 36(c) of the Arms Export Control Act, I am transmitting, herewith, certification of a proposed Manufacturing License Agreement with Japan.

The transaction described in the attached certification involves the manufacture, testing, maintenance and repair of the AN/ARR–78(V) Advanced Sonobuoy Communications Link Receiver.

The United States Government is prepared to license the export of these items having taken into account political, military, economic, human rights, and arms control considerations.

More detailed information is contained in the formal certification which, though unclassified, contains business information submitted to the Department of State by the applicant, publication of which could cause competitive harm to the United States firm concerned.

Sincerely,
Barbara Larkin,
Assistant Secretary, Legislative Affairs.

Enclosure: Transmittal No. DTC 007–00

The Honorable J. Dennis Hastert, Speaker of the House of Representatives.

United States Department of State,
Washington, D.C. 20520, April 14, 2000.

Dear Mr. Speaker: Pursuant to Section 36(c) of the Arms Export Control Act, I am transmitting herewith certification of a proposed license for the export of defense articles or defense services sold commercially under a contract in the amount $50,000,000 or more.

The transaction contained in the attached certification involves the export of technical information and defense services to Germany for the manufacture of prepreg ablative materials used in various rockets, space vehicles and missiles of Germany, the Netherlands, Norway, Denmark, France, Italy, United Kingdom and the European Space Agency

The United States Government is prepared to license the export of these items having taken into account political, military, economic, human rights, and arms control considerations.

More detailed information is contained in the formal certification which, though unclassified, contains business information submitted to the Department of State by the applicant, publication of which could cause competitive harm to the United States firm concerned.

Sincerely,
Barbara Larkin,
Assistant Secretary, Legislative Affairs.

Enclosure: Transmittal No. DTC 009–00

The Honorable J. Dennis Hastert, Speaker of the House of Representatives.

United States Department of State,
Washington, D.C. 20520, April 14, 2000.

Dear Mr. Speaker: Pursuant to Section 36(c) of the Arms Export Control Act, I am transmitting, herewith, certification of a proposed license for the export of defense articles or defense services sold commercially under a contract in the amount $50,000,000 or more.

The transaction contained in the attached certification involves the export of ship engineering and design services to Australia for the construction of a new class of Frigate for the Royal Australian Navy.

The United States Government is prepared to license the export of these items having taken into account political, military, economic, human rights, and arms control considerations.

More detailed information is contained in the formal certification which, though unclassified, contains business information submitted to the Department of State by the applicant, publication of which could cause competitive harm to the United States firm concerned.

Sincerely,
Barbara Larkin,
Assistant Secretary, Legislative Affairs.

Enclosure: Transmittal No. DTC 010–00

The Honorable J. Dennis Hastert, Speaker of the House of Representatives.

United States Department of State,
Washington, D.C. 20520, April 14, 2000.

Dear Mr. Speaker: Pursuant to Section 36(c) of the Arms Export Control Act, I am transmitting herewith certification of a proposed license for the export of defense articles or defense services sold commercially under a contract in the amount $50,000,000 or more.

The transaction contained in the attached certification involves the export of technical data and engineering information to Japan for the manufacture of Chukar II and III target drone systems for use by the Japanese Government.

The United States Government is prepared to license the export of these items having taken into account political, military, economic, human rights, and arms control considerations.

More detailed information is contained in the formal certification which, though unclassified, contains business information submitted to the Department of State by the applicant, publication of which could cause competitive harm to the United States firm concerned.

Sincerely,
Barbara Larkin,
Assistant Secretary, Legislative Affairs.

Enclosure: Transmittal No. DTC 011–00

The Honorable J. Dennis Hastert, Speaker of the House of Representative.

United States Department of State,
Washington, DC 20520, April 14, 2000.

Dear Mr. Speaker: Pursuant to Section 36(c) of the Arms Export Control Act, I am transmitting, herewith, certification of a proposed license for the export of defense articles or defense services sold commercially under a contract in the amount $50,000,000 or more.

The transaction contained in the attached certification involves the export of one HS601 HP PAS 9 commercial communications satellite to French Guiana or Sea Launch for launch on an Ariane or Proton launch vehicle.

The United States Government is prepared to license the export of these items having taken into account political, military, economic, human rights, and arms control considerations.

More detailed information is contained in the formal certification which, though unclassified contains business information submitted to the Department of State by the applicant, publication of which could cause competitive harm to the United States firm concerned.

Sincerely,
Barbara Larkin,
Assistant Secretary, Legislative Affairs.

Enclosure: Transmittal No. DTC 025–00

The Honorable J. Dennis Hastert, Speaker of the House of Representative.

[FR Doc. 00–12831 Filed 5–19–00; 8:45 am]

BILLING CODE 4710–25–U

DEPARTMENT OF TRANSPORTATION

Federal Aviation Administration

[Summary Notice No. PE–2000–18]

Petitions for Exemption; Summary of Petitions Received; Disposition of Petitions Issued

AGENCY: Federal Aviation Administration (FAA), DOT.

ACTION: Notice of petitions for exemption received and of disposition of prior petitions.

SUMMARY: Pursuant to FAA's rulemaking provisions governing the application, processing, and disposition of petitions for exemption (14 CFR part 11), this notice contains a summary of certain petitions seeking relief from specified requirements of the Federal Aviation Regulations (14 CFR chapter I), dispositions of certain petitions previously received, and corrections. The purpose of this notice is to improve the public's awareness of, and participation in, this aspect of FAA's regulatory activities. Neither publication of this notice nor the inclusion or omission of information in the summary is intended to affect the legal status of any petition or its final disposition.

DATES: Comments of petitions received must identify the petition docket number involved and must be received on or before July 21, 2000.

ADDRESSES: Send comments on any petition in triplicate to: Federal Aviation Administration, Office of the Chief Counsel, Attn: Rule Docket (AGC–200), Petition Docket No. ____, 800 Independence Avenue, SW., Washington, DC 20591.

The petition, any comments received, and a copy of any final disposition are filed in the assigned regulatory docket and are available for examination in the Rules Docket (AGC–200), Room 915G, FAA Headquarters Building (FOB 10A), 800 Independence Avenue, SW., Washington, DC 20591; telephone (202) 267–3132.

FOR FURTHER INFORMATION CONTACT: Cherie Jack (202) 267–7271 or Vanessa Wilkins (202) 267–8029 Office of Rulemaking (ARM–1), Federal Aviation Administration, 800 Independence Avenue, SW., Washington, DC 20591.

This notice is published pursuant to paragraphs (c), (e), and (g) of § 11.27 of part 11 of the Federal Aviation Regulations (14 CFR part 11).

Issued in Washington, DC, on May 16, 2000.

Donald P. Byrne,
Assistant Chief Counsel for Regulations.

Petition for Exemption

Docket No.: 30024.
Petitioner: Duncan Aviation.
Regulations Affected: 14 CFR 25.813(c)(1), 25.813(c)(2).
Description of Petition: To allow access to the required emergency exists on the Israeli Aircraft Industries Astra SPX to be modified.

[FR Doc. 00–12824 Filed 5–19–00; 8:45 am]

BILLING CODE 4910–13–M

DEPARTMENT OF TRANSPORTATION

Federal Aviation Administration

Notice of Intent To Rule on Application (00–03–C–00–MSO), To Impose and Use the Revenue From a Passenger Facility Charge (PFC), at Missoula International Airport, Submitted by the Missoula County Airport Authority, Missoula International Airport, Missoula, Montana

AGENCY: Federal Aviation Administration (FAA), DOT.

ACTION: Notice of intent to rule on application.

SUMMARY: The FAA proposes to rule and invites public comment on the application to impose and use PFC revenue at Missoula International Airport under the provisions of 49 U.S.C. 40117 and part 158 of the Federal Aviation Regulations (14 CFR 158).

DATES: Comments must be received on or before June 21, 2000.

ADDRESSES: Comments on this application may be mailed or delivered in triplicate to the FAA at the following address: David P. Gabbert, Manager; Helena Airports District Office, Federal Aviation Administration, 2725 Skyway Drive, Suite 2, Helena, Montana 59602.

In addition, one copy of any comments submitted to the FAA must be mailed or delivered to Mr. John P. Seymour, Director of Airports, at the following address: Missoula International Airport, 5225 Highway 10 West, Missoula, Montana 59802.

Air Carriers and foreign air carriers may submit copies of written comments previously provided to Missoula International Airport, under section 158.23 of part 158.

FOR FURTHER INFORMATION CONTACT: David P. Gabbert, (406) 449–5271, Federal Aviation Administration, Airports District Office, 2725 Skyway Drive, Suite 2, Helena, Montana 59602.

The application may be reviewed in person at this same location.

SUPPLEMENTARY INFORMATION: The FAA proposes to rule and invites public comment on the application (00–03–C–00–MSO) to impose and use PFC revenue at Missoula International Airport, under the provisions of 49 U.S.C. 40117 and part 158 of the Federal Aviation Regulations (14 CFR part 158).

On May 12, 2000, the FAA determined that the application to impose and use the revenue from a PFC submitted by Missoula County Airport Authority, Missoula International Airport, Missoula, Montana, was substantially complete within the requirements of section 158.25 of part 158. The FAA will approve or disapprove the application in whole or in part, no later than August 11, 2000.

The following is a brief overview of the application.

Level of the proposed PFC: $3.00.

Proposed charge effective date: August 1, 2003.

Proposed charge expiration date: October 31, 2006.

Total requested for use approval: $1,500,000.

Brief description of proposed project: Acquire land for approach protection, airport development and noise mitigation.

Class or classes of air carriers which the public agency has requested not be required to collect PFC's: Non-scheduled on demand air taxis and charters.

Any person may inspect the application in person at the FAA office listed above under **FOR FURTHER INFORMATION CONTACT** and at the FAA Regional Airports Office located at: Federal Aviation Administration, Northwest Mountain Region, Airports Division, ANM–600, 1601 Lind Avenue S.W., Suite 315, Renton, WA 98055–4056.

In addition, any person may, upon request, inspect the application, notice and other documents germane to the application in person at the Missoula International Airport.

Issued in Renton, Washington on May 12, 2000.

David A. Field,

Manager, Planning, Programming and Capacity Branch, Northwest Mountain Region.

[FR Doc. 00–12825 Filed 5–19–00; 8:45 am]

BILLING CODE 4910–13–M

DEPARTMENT OF TRANSPORTATION

Federal Highway Administration

Environmental Assessment or Environmental Impact Statement: Franklin and Licking Counties, OH

AGENCY: Federal Highway Administration (FHWA), DOT.

ACTION: Notice of intent.

SUMMARY: The FHWA is issuing this notice to advise the public that an Environmental Assessment or Environmental Impact Statement will be prepared for a proposed highway project in Franklin and Licking Counties, Ohio.

FOR FURTHER INFORMATION, CONTACT: Andreas Garnes, Rural Programs Engineer, Federal Highway Administration, 200 N. High Street, Room 328, Columbus, Ohio 43215, Telephone: (614) 280–6856.

SUPPLEMENTARY INFORMATION: The FHWA, in cooperation with the Ohio Department of Transportation, will prepare an Environmental Assessment (EA) or Environmental Impact Statement (EIS) for a proposal to improve the S.R. 161/S.R. 37/S.R. 16 Macro Corridor by construction of a limited access divided highway facility that will connect the existing four lane facilities located at the western terminus in the vicinity of the City of Columbus, Franklin County, Ohio and the eastern terminus in the vicinity of Granville, Licking County, Ohio. The Macro Corridor extends from IR 270 to IR 77 and encompasses the portions of SR 161, SR 37, SR 16 and US 36 located between these two Interstate Routes.

Construction of this section of the Macro Corridor is considered necessary to complete a missing link in the existing Macro Corridor. This construction is considered necessary to relive congestion and improve safety for local and regional travel. The unimpeded flow of goods and services is essential to the economic vitality of Ohio and Macro-Corridors are essential in the delivery of these goods and services. This proposal needs to be consistent with regional and statewide goals for planned growth and mobility in Central Ohio.

Alternatives will be developed that will address capacity and safety deficiencies. Alternative solutions may consist of different alignments that diverge significantly from the existing alignment within the corridor in some sections. The alternatives may also include improving and widening the existing roadway. FHWA, ODOT, and local agencies will be inviting participation in defining the alternatives to be evaluated in the EA or EIS, and any significant social, economic, or environmental issues related to the alternatives.

Letters describing the proposed action and soliciting comments will be sent to appropriate Federal, State, and local agencies and to private organizations and citizens who have previously expressed or are known to have interest in this proposal. Coordination with federal, state, and local agencies will be conducted at the established concurrence points in ODOT's preliminary development process. A series of public meetings will be held throughout the development of the project. At a minimum, the meetings will be held in accordance with ODOT's Preliminary Development Process. The first public meetings will be held in the summer of 2000 and property owners in the study area were notified of the project April 20, 2000. In addition, a public hearing will be held. Public notice will be given of the time and place of the meetings and hearing. The EA or draft EIS will be available for public agency review and comment prior to the public hearing. To ensure that the full range of issues relating to this proposed action are identified and addressed, comments and suggestions are invited from all interested parties. Comments or questions concerning this proposed action should be sent to the FHWA at the address provided above.

(Catalog of Federal Domestic Assistance Program Number 20.205, Highway Planning and Construction. The regulations implementing Executive Order 12372 regarding intergovernmental consultation on Federal programs and activities apply to this program)

Issued on: May 12, 2000.

Andreas Garnes,

Rural Programs Engineer, Federal Highway Administration, Columbus, Ohio.

[FR Doc. 00–12783 Filed 5–19–00; 8: 45 am]

BILLING CODE 4910–22–P

DEPARTMENT OF TRANSPORTATION

Federal Motor Carrier Safety Administration

[Docket No. FMCSA 2000–7365]

Public Meeting on the Commercial Drivers License Program in Illinois

AGENCY: Federal Motor Carrier Safety Administration (FMCSA), DOT.

ACTION: Notice of public meeting.

SUMMARY: The FMCSA is announcing a public meeting for interested persons to present comments and views on the Commercial Drivers License (CDL)

program in Illinois. This action is necessary to inform the public about the date, time, and structure of the meeting. The FMCSA hopes to hear from the public any concerns they may have about the State's CDL program, CDL issuance practices, driver testing (including third party testing), literacy and translation requirements. The public meeting will be recorded and a summary of the proceedings placed in the docket number provided in the heading of this document.

DATES: The meeting will be held on Tuesday June 6, 2000, beginning at 9 a.m. and ending at 4:30 p.m., with a break from Noon to 1:30 p.m.

ADDRESSES: The meeting will be held at the Ramada Plaza Hotel (O'Hare), 6600 N. Mannheim Road, Rosemont, Illinois 60018, telephone (847) 827–5131. The location is easily accessible from all major expressways. The hotel is approximately one mile from I–190 Mannheim Road (North exit). It can also be reached by the CTA Blue Line to O'Hare Airport.

FOR FURTHER INFORMATION CONTACT: To request general information about the meeting: Mrs. Rose Ropke at (708) 283–3518. FMCSA Headquarters contact: Mr. Larry Slade at (202) 366–5721.

SUPPLEMENTARY INFORMATION:

Electronic Access

Internet users may access all comments received by the U.S. DOT Dockets, Room PL–401, by using the universal resource locator (URL): *http://dms.dot.gov*. It is available 24 hours each day, 365 days each year. Please follow the instructions online for more information and help.

An electronic copy of this document may be downloaded by using a computer, modem and suitable communications software from the Government Printing Office's Electronic Bulletin Board Service at (202)512–1661. Internet users may reach the Office of the Federal Register's home page at: *http://www.nara.gov/fedreg* and the Government Printing Office's web page at: http://www.access.gpo.gov/nara.

Internet users may also find this document on the FMCSA web site at *http://www.fmcsa.dot.gov/rulesregs/fmcsr/rulemakings.htm.*

Background

Structure of Public Meeting

At 9 a.m. there will be opening remarks by the Panel Chair. Following the opening remarks, the first presenter will be called to the podium. There will be a break from Noon to 1:30 p.m. The afternoon session will close at 4:30 p.m. Speakers must limit their oral presentations to no more than 10 minutes duration. Presenters may submit additional written documentation to the public docket.

Participants

All persons who would like to present comments must preregister for the meeting. Preregistration can be done by submitting name, address, phone number, home or business address either by electronic mail (*CDLMTG@fhwa.dot.gov*), facsimile at (708) 283–3579 or by telephone at (708) 283–3518. Those who would like to present comments must preregister and indicate their desire to do so. Preregistration must be submitted by 4 p.m., e.t., no later than June 1, 2000.

All persons will be required to sign in at the reception table. At the reception table please be prepared to give your name, title, company or home address and phone number. Persons failing to satisfy requirements will forfeit their opportunity to participate in the meeting. Such persons may, however, submit their written comments by the close of business on June 13, 2000, to the Docket Clerk, U.S. DOT Docket, Room PL–401, 400 Seventh Street, SW., Washington, DC 20590–0001. To the extent possible, the docket comments received after the deadline date will be considered for inclusion in the final panel report.

Authority: 49 U.S.C. 322, 31502, and 31136; and 49 CFR 1.73.

Issued on: May 16, 2000.

Brian M. McLaughlin,

Director, Office of Policy Plans and Regulations.

[FR Doc. 00–12737 Filed 5–19–00; 8:45 am]

BILLING CODE 4910–22–P

DEPARTMENT OF THE TREASURY

Internal Revenue Service

[INTL–978–86]

Proposed Collection; Comment Request for Regulation Project

AGENCY: Internal Revenue Service (IRS), Treasury.

ACTION: Notice and request for comments.

SUMMARY: The Department of the Treasury, as part of its continuing effort to reduce paperwork and respondent burden, invites the general public and other Federal agencies to take this opportunity to comment on proposed and/or continuing information collections, as required by the Paperwork Reduction Act of 1995, Public Law 104–13 (44 U.S.C. 3506(c)(2)(A)). Currently, the IRS is soliciting comments concerning an existing notice of proposed rulemaking, INTL–978–86, Information Reporting by Passport and Permanent Residence Applicants (§ 301.6039E–1(c)).

DATES: Written comments should be received on or before July 21, 2000 to be assured of consideration.

ADDRESSES: Direct all written comments to Garrick R. Shear, Internal Revenue Service, room 5244, 1111 Constitution Avenue NW., Washington, DC 20224.

FOR FURTHER INFORMATION CONTACT: Requests for additional information or copies of this regulation should be directed to Larnice Mack, (202) 622–3179, Internal Revenue Service, room 5244, 1111 Constitution Avenue NW., Washington, DC 20224.

SUPPLEMENTARY INFORMATION:

Title: Information Reporting by Passport and Permanent Residence Applicants.

OMB Number: 1545–1359.

Regulation Project Number: INTL–978–86.

Abstract: This regulation requires applicants for passports and permanent residence status to report certain tax information on the applications. The regulation is intended to enable the IRS to identify U.S. citizens who have not filed tax returns and permanent residents who have undisclosed sources of foreign income to notify such persons of their duty to file United States tax returns.

Current Actions: There is no change to this existing regulation.

Type of Review: Extension of a currently approved collection.

Affected Public: Individuals or households.

Estimated Number of Respondents for Passport Applicants: 5,000,000.

Estimated Time Per Respondent: 6 minutes.

Estimated Total Annual Burden Hours for Passport Applicants: 500,000.

Estimated Number of Respondents for Permanent Residence Applicants: 500,000.

Estimated Time Per Respondent: 30 minutes.

Estimated Total Annual Burden Hours for Permanent Residence Applicants: 250,000.

The following paragraph applies to all of the collections of information covered by this notice:

An agency may not conduct or sponsor, and a person is not required to respond to, a collection of information unless the collection of information displays a valid OMB control number.

Books or records relating to a collection of information must be retained as long as their contents may become material in the administration of any internal revenue law. Generally, tax returns and tax return information are confidential, as required by 26 U.S.C. 6103.

Request for Comments

Comments submitted in response to this notice will be summarized and/or included in the request for OMB approval. All comments will become a matter of public record. Comments are invited on: (a) Whether the collection of information is necessary for the proper performance of the functions of the agency, including whether the information shall have practical utility; (b) the accuracy of the agency's estimate of the burden of the collection of information; (c) ways to enhance the quality, utility, and clarity of the information to be collected; (d) ways to minimize the burden of the collection of information on respondents, including through the use of automated collection techniques or other forms of information technology; and (e) estimates of capital or start-up costs and costs of operation, maintenance, and purchase of services to provide information.

Approved: May 16, 2000.

Garrick R. Shear,

IRS Reports Clearance Officer.

[FR Doc. 00–12832 Filed 5–19–00; 8:45 am]

BILLING CODE 4830–01–P

DEPARTMENT OF VETERANS AFFAIRS

Advisory Committee on Former Prisoners of War, Notice of Meeting

The Department of Veterans Affairs (VA) gives notice under Public Law 92–463 that a meeting of the Advisory Committee on Former Prisoners of War will be held on June 5 through June 7, 2000, at the Department of Veterans Affairs, Central Office, 810 Vermont Avenue NW, Room 230, Washington, DC 20420. Each day the meeting will convene at 9 a.m. and end at 4:30 p.m. The meeting is open to the public.

The purpose of the committee is to advise the Secretary of Veterans Affairs on the administration of benefits under Title 38, United States Code, for veterans who are former prisoners of war, and to make recommendations on the needs of such veterans for compensation, health care and rehabilitation.

On June 5, the meeting will begin with an introduction of committee members and dignitaries, a review of Committee reports, an update of activities since the last meeting, and a period for POW veterans and/or the public to address the committee. The Committee will also review the Secretary's response to the April 1999 report of meeting, and receive presentations on the Veterans Benefits Administration and Veterans Health Administration activities. On June 6, the meeting will include an update on the Center for POW Studies, a report from the National Institute of Health on its Mortality/Morbidity Study and a briefing from the Special Panel on Stroke. On June 7, the Committee's Medical and Administrative subcommittees will break out to discuss their activities and report back to the Committee.

Additionally, the Committee will review and analyze the comments discussed throughout the meeting for the purpose of assisting and compiling a final report to be sent to the Secretary.

Members of the public may direct questions or submit prepared statements for review by the Committee in advance of the meeting, in writing only, to Mr. Robert J. Epley, Director, Compensation and Pension Service (21), Department of Veterans Affairs, 810 Vermont Avenue, NW., Washington, DC 20420. Submitted materials must be received by May 31, 2000. A report of the meeting and roster of Committee members may be obtained from Mr. Epley.

Dated: May 11, 2000.

By Direction of the Secretary.

Marvin R. Eason,

Committee Management Officer.

[FR Doc. 00–12705 Filed 5–19–00; 8:45 am]

BILLING CODE 8320–01–M

Federal Register

Monday,
May 22, 2000

Part II

Department of the Treasury

Internal Revenue Service

26 CFR Parts 1 and 31

Revisions to Regulations Relating to Withholding of Tax on Certain U.S. Source Income Paid to Foreign Persons and Revisions of Information Reporting Regulations; Final Rule

DEPARTMENT OF THE TREASURY

Internal Revenue Service

26 CFR Parts 1 and 31

[TD 8881]

RIN 1545–AX53; RIN 1545–AV27; RIN 1545–AV41

Revisions to Regulations Relating to Withholding of Tax on Certain U.S. Source Income Paid to Foreign Persons and Revisions of Information Reporting Regulations.

AGENCY: Internal Revenue Service (IRS), Treasury.

ACTION: Final regulations.

SUMMARY: This document contains amendments to final regulations relating to the withholding of income tax under sections 1441, 1442, and 1443 on certain U.S. source income paid to foreign persons and related requirements governing collection, deposit, refunds, and credits of withheld amounts under sections 1461 through 1463. Additionally, this document contains amendments under sections 6041, 6041A, 6042, 6045, 6049, and 3406. This regulation affects persons making payments of U.S. source income to foreign persons.

DATES: These regulations are effective January 1, 2001.

FOR FURTHER INFORMATION CONTACT: Carl Cooper, Laurie Hatten-Boyd, or Kate Hwa (202) 622–3840 (not a toll free number).

SUPPLEMENTARY INFORMATION:

Paperwork Reduction Act

The collections of information in these final regulations have been reviewed and approved by the Office of Management and Budget in accordance with the Paperwork Reduction Act of 1995 (44 U.S.C. 3507) under control number 1545–1484. Responses to these collections of information are required to obtain a benefit (to claim an exemption to, or a reduction in, withholding), and to facilitate tax compliance (to verify entitlement to an exemption or a reduced rate). The likely respondents are individuals, businesses, and other for-profit organizations.

Comments on the collections of information should be sent to the Office of Management and Budget, Attn: Desk Officer for the Department of the Treasury, Office of Information and Regulatory Affairs, Washington, DC 20503, with copies to the Internal Revenue Service, Attn: IRS Reports Clearance Officer, OP:FS:FP, Washington, DC 20224.

The estimated average annual burden per respondent and/or recordkeeper are reflected in the burdens of Forms W–8, 1042, 1042–S, 1099, and the income tax return of a foreign person filed for purposes of claiming a refund.

An agency may not conduct or sponsor, and a person is not required to respond to, a collection of information unless the collection of information displays a valid control number assigned by the Office of Management and Budget.

Books or records relating to a collection of information must be retained as long as their contents may become material in the administration of any internal revenue law. Generally, tax returns and tax return information are confidential, as required by 26 U.S.C. 6103.

Background

In Treasury Decision (TD) 8734 (62 FR 53387), the Treasury Department and the IRS issued comprehensive regulations (final regulations) under chapter 3 (sections 1441–1464) and subpart G of Subchapter A of chapter 61 (sections 6041–6050S) of the Internal Revenue Code. Those final regulations were amended by TD 8804 (63 FR 72183 [1999–12 I.R.B. 5]) which delayed the effective date of the final regulations to payments made after December 31, 1999. The effective date of the regulations was again extended by TD 8856 (64 FR 73408) to payments made after December 31, 2000.

Need for Changes

Since the publication of TD 8734, the IRS and Treasury have received numerous comments relating to technical errors in the regulations and ways to ease compliance while keeping the objectives of the regulations in place. In Notice 99–8 (1999–5 I.R.B. 26), the IRS and Treasury announced amendments that would be made to the regulations. This TD implements Notice 99–8 and contains additional changes made in response to comments as well as the IRS and Treasury's further analysis of the regulations.

Explanation of Revisions

A. Changes to § 1.1441–1

1. Payments to a U.S. Branch of Certain Foreign Banks or Foreign Insurance Companies

Generally, a payment to a U.S. branch of a foreign person is a payment to a foreign person. Under § 1.1441–1(b)(2)(iv), however, a U.S. branch of certain foreign banks or insurance companies and a withholding agent may agree to treat the U.S. branch as a U.S. person for purposes of chapter 3 of the Internal Revenue Code. The regulation as initially drafted required a withholding agent to treat such a U.S. branch as a U.S. person for all purposes under chapter 3 of the Internal Revenue Code. The regulation itself, however, does not treat a U.S. branch as a U.S. person for all purposes under chapter 3 of the Internal Revenue Code. For example, a U.S. branch of a foreign bank or insurance company provides a withholding certificate on a Form W–8, which is used only by foreign persons. Further, under § 1.1461–1(c), payments to such a branch are reportable as payments to a foreign person on Form 1042–S. Therefore, § 1.1441–1(b)(2)(iv) has been amended to state that, notwithstanding the agreement between the withholding agent and a U.S. branch to treat the U.S. branch as a U.S. person, the branch is not treated as a U.S. person for purposes of providing documentation or for reporting payments to the branch.

2. Rules for Reliably Associating a Payment With a Withholding Certificate or Other Appropriate Documentation

Section 1.1441–1(b)(2)(vii) contains rules to determine whether a payment can be reliably associated with valid documentation. A payment that cannot be reliably associated with valid documentation is subject to the presumption rules in §§ 1.1441–1(b)(3), 1.1441–4(a)(2)(ii) and (3)(i), 1.1441–5(d) and (e)(6), 1.1441–9(b)(3), and 1.6049–5(d). Paragraph (b)(2)(vii) did not adequately address when a payment made to a nonqualified intermediary, a flow-through entity, or a U.S. branch of certain foreign banks and insurance companies (other than a branch that acts as a U.S. person) would be treated as reliably associated with documentation. These entities provide a withholding certificate for themselves and withholding certificates, documentary evidence, or other information for the persons on whose behalf they act. Therefore, the payment must be reliably associated not only with a withholding certificate from the intermediary, flow-through entity, or U.S. branch, but also with documentation from, or information relating to, the payee on whose behalf the entity acts.

Paragraph (b)(2)(vii) has been amended to provide more detailed reliable association rules. For a payment made to a nonqualified intermediary, a flow-through entity, or a U.S. branch, new paragraph (b)(2)(vii)(B) provides that a withholding agent can reliably associate the payment with valid documentation if, prior to the payment, it has received a valid nonqualified

intermediary withholding certificate on Form W–8IMY; it can determine the portion of the payment that relates to valid documentation associated with the Form W–8IMY from a payee (i.e., a person other than a nonqualified intermediary, flow-through entity, or U.S. branch); and the nonqualified intermediary, flow-through entity, or U.S. branch has provided sufficient information for the withholding agent to report the payment on Form 1042–S or Form 1099, if reporting is required.

Paragraph (b)(2)(vii)(C) provides rules for a withholding agent that makes a payment to a qualified intermediary that does not assume primary withholding responsibility under chapter 3 of the Internal Revenue Code or primary Form 1099 reporting and backup withholding responsibility under chapter 61 and section 3406 of the Internal Revenue Code. The payment can be reliably associated with valid documentation if, prior to the payment, the withholding agent receives a valid qualified intermediary withholding certificate on Form W–8IMY and a withholding statement that allocates the payment among withholding rate pools, including withholding rate pools for each U.S. non-exempt recipient for which the qualified intermediary has provided a valid Form W–9 (or other information if a Form W–9 has not been provided).

For a payment made to a qualified intermediary that assumes primary withholding responsibility under chapter 3 of the Internal Revenue Code with respect to the payment, but does not assume primary Form 1099 reporting and backup withholding responsibility under chapter 61 and section 3406 of the Internal Revenue Code, paragraph (b)(2)(vii)(D) provides that a withholding agent can reliably associate the payment with valid documentation if, prior to the payment, it receives a valid Form W–8IMY and the withholding statement associated with the Form W–8IMY allocates the payment between a single withholding rate pool for which the qualified intermediary assumes primary withholding responsibility and separate withholding rate pools for each U.S. non-exempt recipient.

Paragraph (b)(2)(vii)(E) provides rules for a withholding agent that makes a payment to a qualified intermediary that assumes primary Form 1099 reporting and backup withholding responsibility under chapter 61 and section 3406 of the Internal Revenue Code, but does not assume primary withholding responsibility under chapter 3 of the Internal Revenue Code. The payment can be reliably associated with valid documentation if, prior to the payment, the withholding agent can associate the payment with a valid Form W–8IMY and the withholding statement associated with the Form W–8IMY allocates the payment among the withholding rate pool or pools for which withholding responsibility is not assumed and the portion of payment for which the qualified intermediary assumes Form 1099 reporting and backup withholding responsibility.

Finally, for a payment made to a qualified intermediary that assumes both primary withholding responsibility under chapter 3 of the Internal Revenue Code and primary Form 1099 reporting and backup withholding responsibility under chapter 61 and section 3406 of the Internal Revenue Code, paragraph (b)(2)(vii)(F) provides that a withholding agent can reliably associate the payment with valid documentation if, prior to the payment, it can associate the payment with a valid Form W–8IMY. In this case, no withholding rate pool allocation information is required. This same rule applies for payments made to a withholding foreign partnership.

3. Presumptions of Classification as Individual, Corporation, Partnership, etc.

As initially drafted, § 1.1441–1(b)(3)(ii) provided a withholding agent with presumption rules to determine a payee's classification (e.g., individual, corporation, partnership) if it could not reliably associate a payment with valid documentation. Paragraph (b)(3)(ii) did not, however, provide a presumption rule if a withholding agent could reliably associate a payment with documentary evidence (i.e., documentation other than a withholding certificate) from which it could not determine the payee's classification. For example, documentary evidence may indicate that a payee (other than an entity that is treated as a per se corporation under § 301.7701–2(b)(8)(i)) is a type of entity that can be organized so that all of its members have limited liability, in which case it would be treated as an association, or so that one or more of its members have unlimited liability, in which case it would be treated as a partnership. The determination of classification can be critical because if the entity is a flow-through entity, it is not the beneficial owner of the payment and its documentary evidence cannot be relied upon to grant a reduced rate of withholding.

Section 1.1441–1(b)(3)(ii)(C) has been added to permit a withholding agent to treat an entity that has provided documentary evidence as a corporation if the classification of the entity cannot be determined from documentary evidence or by reference to the exempt recipient rules under § 1.6049–4(c)(1)(ii). This presumption rule will reduce burdens on withholding agents that are permitted to use documentary evidence, such as foreign intermediaries and flow-through entities, which would otherwise have to request from payees additional information regarding U.S. tax classification. The presumption rule is not, however, intended to allow foreign entities to avoid making the correct determination of their classification and to provide the correct documentation. Thus, a foreign entity must make a determination about its classification and if it determines that it is an intermediary, partnership, foreign simple trust, or foreign grantor trust under U.S. tax law principles, it must provide an intermediary or flow-through withholding certificate on Form W–8IMY together with the appropriate information relating to its customers, partners, beneficiaries, owners, or other payees. Further, a withholding agent cannot treat an entity as a corporation if it knows, or should know, that the entity is a flow-through entity or intermediary. For example, if a particular type of collective investment vehicle provides documentary evidence that does not establish that it is a corporation, partnership, or trust, but the withholding agent knows, or has reason to know, that the investment vehicle is classified as a partnership for U.S. tax purposes, it must request a partnership withholding certificate from the entity.

An entity that is presumed to be a foreign corporation under new paragraph (b)(2)(ii)(C) cannot be treated as the beneficial owner entitled to a reduced rate of withholding to the extent the documentary evidence indicates that it is a bank, broker, custodian, intermediary, or other agent unless the entity provides a statement that it is the beneficial owner of the income. For example, documentary evidence that indicates that the payee is a bank does not permit a withholding agent to apply the portfolio interest exception to payments of interest made to the bank. In addition, even though a foreign entity is treated as a beneficial owner for purposes of the exceptions to withholding under the Internal Revenue Code and regulations, it is not necessarily entitled to claim treaty benefits. Whether treaty benefits may be claimed by an entity depend on whether it meets the requirements under the income tax treaty and section 894.

4. Changes to Presumption Rules

Several simplifying and clarifying changes have been made to the presumption rules in § 1.1441–1(b)(3). First, the presumption rule applicable to pensions and annuities contained in § 1.1441–1(b)(3)(iii)(C) has been expanded to apply to individual retirement accounts and individual retirement annuities. Second, § 1.1441–1(b)(3)(iii)(D), which contains presumption rules applicable to offshore accounts, was revised to state the applicable rule more clearly. In addition, the restriction on applying the presumption rule of paragraph (b)(3)(iii)(D) to amounts that are not subject to withholding has been moved from that paragraph to § 1.6049–5(d)(2). This change eliminates a conflict with § 1.6049–5(d)(2), as previously drafted, which applied the paragraph (b)(3)(iii)(D) rule to amounts not subject to withholding.

Section 1.1441–1(b)(3)(iv) contains a grace period presumption rule that permits a withholding agent to treat a payee as a foreign person in certain situations where the withholding agent would presume the payee to be a U.S. person. Although the grace period rule generally does not permit a withholding agent to apply any exceptions to withholding, it does permit a withholding agent to apply a reduced rate of withholding for 90 days to a payee that provides a withholding certificate that would have been valid except that it was transmitted by facsimile. One commentator noted that because the facsimile rule applied only to payees that a withholding agent could, ''in its discretion'' treat as a foreign person, the rule was limited to those situations where the presumption rules would have treated the payee as a U.S. person and the withholding agent was exercising its discretion to treat the payee as foreign. Therefore, the commentator argued, the rule arguably could not be applied to payees that were required to be treated as foreign persons under the presumption rules, e.g., an exempt recipient with indicia of foreign status. The regulation has been modified by removing the phrase ''in its discretion'' thereby permitting the facsimile rule to apply to payees that are treated as foreign payees under the presumption rules.

Paragraph (b)(3)(v), as promulgated in TD 8734, provided several presumption rules that applied if a withholding agent did not receive from a nonqualified intermediary the withholding certificates or documentary evidence of the persons on whose behalf the nonqualified intermediary acted or did not receive information allocating the payment to each person. Under paragraph (b)(3)(v)(C), if the withholding agent could associate a payment with a group of beneficial owners or payees, it could treat the payment as being made in its entirety to the person in the group that was subject to the highest withholding rate or, if the rates were equal, to the payee in the group with the highest U.S. tax liability. If a nonqualified intermediary grouped persons subject to similar withholding and tax rates together and allocated the payment to the group, the nonqualified intermediary could achieve a reduced rate of withholding for its customers without reliably associating the payment to each of the customers that would be entitled to the payment. Treasury and the IRS stated in Notice 99–8 that affording a reduced rate of withholding under these circumstances was inappropriate. Further, it was inappropriate to report the entire payment as if it were made to a single documented payee who was not entitled to receive the entire amount of income.

Paragraph (b)(3)(v) has been revised so that whenever a payment to a nonqualified intermediary cannot be reliably associated with valid documentation from a specific payee, the payment is treated as made to an undocumented foreign payee and is subject to 30 percent withholding. Under § 1.1461–1(c), such payments are reported to an unknown owner on Form 1042–S. Thus, a payment can no longer be subject to a reduced rate of withholding because it can be allocated to a group of documented payees all of whom are subject to the same reduced rate of withholding. Similar changes have been made to the presumption rules that applied to foreign partnerships under former § 1.1441–5(d)(3)(ii).

Paragraph (b)(3)(vi), as originally drafted, was in error. It stated that the presumption rules that applied to foreign intermediaries also applied to U.S. branches of foreign banks and insurance companies that assumed withholding responsibility. The rule should have provided that the intermediary presumption rules also apply to U.S. branches of foreign banks and insurance companies that do not agree to be treated as U.S. persons. Those branches are generally treated in the same manner as nonqualified intermediaries under chapter 3 of the Internal Revenue Code. Therefore, paragraph (b)(3)(vi) has been revised to apply only to those branches that are not treated as U.S. persons. Finally, paragraph (b)(3)(vii), which applies to payments to joint payees, has been amended to clarify the treatment of payments made to joint accounts.

5. Rules for Withholding and Reporting of Payments by a Foreign Intermediary and Certain U.S. Branches

Section 1.1441–1(b)(6) sets forth the withholding obligations of a foreign intermediary and certain U.S. branches. The regulation, as originally drafted, stated that a qualified intermediary, a nonqualified intermediary, or a U.S. branch of a foreign bank or insurance company was deemed to have satisfied any obligation it had to withhold and report an amount it paid if it did not know that the correct amount had not been withheld. The rule did not, however, require a foreign intermediary or U.S. branch to report a payment if it knew that the withholding agent from whom it received the payment had not reported the payment to the persons on whose behalf the foreign intermediary or U.S. branch acted as long as the correct amount was withheld. For example, if a U.S. withholding agent withheld 30 percent from a payment of an amount subject to withholding made to a nonqualified intermediary because the nonqualified intermediary failed to provide documentation or allocation information relating to the persons for whom it acted, the rule relieved the nonqualified intermediary from any obligation to report the payment to those persons. Foreign intermediaries and U.S. branches, however, are withholding agents under § 1.1441–7(a) and, as stated in Notice 99–8, it is inappropriate to relieve them of any reporting responsibility unless they have provided another withholding agent with all of the information that the withholding agent needs to report amounts paid to the appropriate recipients of the income. In addition, paragraph (b)(6) should not have included qualified intermediaries, because a qualified intermediary has reporting responsibilities whether or not another withholding agent properly reported the payment made to the qualified intermediary.

The regulation has been revised to provide that a nonqualified intermediary or U.S. branch (other than a U.S. branch treated as a U.S. person) is not required to withhold and report if the nonqualified intermediary or U.S. branch (i) has provided a valid nonqualified intermediary or U.S. branch withholding certificate, (ii) has provided all of the information required to be included in a withholding statement associated with its withholding certificate so that another withholding agent can do the required reporting on Form 1042–S or Form

1099, and (iii) does not know, and has no reason to know, that the other withholding agent did not withhold the correct amount or did not report the payment correctly. A qualified intermediary's obligations to withhold and report are determined in accordance with its qualified intermediary agreement.

6. Definitions

Section 1.1441–1(c) contains the definitions of terms used in the regulations under chapter 3 of the Internal Revenue Code. The section has been significantly expanded and certain definitions have been consolidated in this section. New definitions, or cross-references to definitions, have been provided for the terms beneficial owner, payee, intermediary, nonqualified intermediary, qualified intermediary, withholding certificate, documentary evidence, documentation, payor, exempt recipient, non-exempt recipient, reportable amounts, flow-through entity, foreign simple trust, foreign complex trust, foreign grantor trust, partnership, nonwithholding foreign partnership, and withholding foreign partnership.

Paragraph (c)(6)(i) has been changed to state specifically that the definition of beneficial owner does not apply in cases where a reduced rate of withholding is being claimed under an income tax treaty. This change has been made to clarify that a person who is a beneficial owner of an item of income for purposes of these regulations would not necessarily beneficially own the item of income for purposes of an income tax treaty.

Paragraph (c)(6), as originally drafted, did not include rules to determine the beneficial owner of a payment made to a foreign trust or estate. In general, the regulations retained the rules for foreign trusts and estates that existed prior to the publication of TD 8734. The paragraph has been revised to provide specific rules for payments to foreign trusts and estates. Generally, the beneficial owners of a payment to a foreign simple trust are the beneficiaries of the trust. The beneficial owners of a payment made to a foreign grantor trust are the owners of the trust. Foreign complex trusts and foreign estates are considered to be the beneficial owners of income paid to such entities.

Paragraph (c)(12) has been added to clarify the term *payee.* It provides cross-references to those sections under which the payee of income is determined, and emphasizes that foreign intermediaries and flow-through entities are generally not considered the payees of income. A qualified intermediary is, however, a payee to the extent it assumes primary withholding responsibility with respect to a payment, and a flow-through entity is a payee if it is receiving income that is, or is treated as, effectively connected with the conduct of a U.S. trade or business.

The definition of a flow-through entity has been moved from § 1.1441–1(e)(3)(i) to paragraph (c)(23). The definition has also been expanded and clarified. The term *flow-through entity* refers to any entity which has an obligation to transmit documentation to another withholding agent. Therefore, an entity may be a flow-through entity whether or not the income paid to the entity is includible in the gross income of the entity's owners. A flow-through entity includes a nonwithholding foreign partnership, a foreign simple trust, a foreign grantor trust, or an entity that is fiscally transparent under section 894 to the extent it provides documentation on behalf of its interest holders. A withholding foreign partnership and a withholding foreign trust are not flow-through entities. The term flow-through entity has replaced the term partnership in numerous places throughout the regulation.

7. Withholding Certificates

a. Forms W–9. Section 1.1441–1(d) contains rules for a payee to establish its status as a U.S. payee. Under paragraph (d), a payee that provides a Form W–9 may be treated as a U.S. payee that is not subject to withholding under section 1441. Commentators have noted that under current law, there is no prohibition against a foreign person providing a Form W–9 to establish status as an exempt recipient. They therefore suggest that the regulations should be clarified to specifically state that providing a Form W–9 serves as a representation of U.S. status and should only be furnished by a U.S. person. In response to these comments, paragraph (d)(2) has been amended to state that furnishing a Form W–9 serves as a statement that the person providing the form is a U.S. person. Therefore, a foreign person, including a U.S. branch of a foreign person, should not provide a Form W–9 to a withholding agent. The instructions to Form W–9 will also be modified to make clear that providing a Form W–9 is a declaration of U.S. status.

Paragraph (d)(3) is revised to eliminate the requirement for a permanent residence address. Permanent residence address is a term defined in § 1.1441–1(e)(2)(ii) and is generally the address of a foreign person in the country in which the person is a resident for tax purposes. The term is inapplicable, and potentially misleading, as applied to the address a U.S. person should provide on Form W–9.

Paragraph (d)(4), as originally drafted, provided rules to determine whether a payment was made to a U.S. beneficial owner. Generally, the regulation provided that if a customer of a foreign intermediary provided a Form W–9, the withholding agent could treat such person as a U.S. beneficial owner. A customer of a foreign intermediary could also be treated as a U.S. beneficial owner if it provided a U.S. branch withholding certificate that evidenced its agreement to be treated as a U.S. person. A Form W–9 and a U.S. branch withholding certificate, however, do not establish beneficial ownership. Further, it is not necessary under the regulations to determine whether a U.S. payee is a beneficial owner because a payment to a U.S. payee is not subject to withholding under chapter 3 of the Internal Revenue Code whether or not the payee is the beneficial owner of the income. Thus, the paragraph has been modified to provide that the withholding agent may treat the payee of a payment made to a foreign intermediary or a flow-through entity as a U.S. payee if the payee provides a Form W–9 or a U.S. branch withholding certificate that evidences the branch's agreement to be treated as a U.S. person.

b. Intermediary and flow-through withholding certificates. Section 1.1441–1(e)(3)(i) provides definitions for the terms intermediary withholding certificate, flow-through withholding certificate, and U.S. branch withholding certificate. That section originally defined a flow-through withholding certificate as a Form W–8 furnished by a partnership (other than a withholding foreign partnership) or a trust or estate. The paragraph has been revised to conform to the definition of flow-through entity contained in § 1.1441–1(c)(23) and the new rules contained in § 1.1441–5(e) regarding foreign trusts and foreign estates, discussed in section E of this Explanation of Provisions. Under paragraph (e)(3)(i), as revised, a flow-through withholding certificate is defined as a withholding certificate on Form W–8 furnished by a nonwithholding foreign partnership, a foreign simple trust, a foreign grantor trust, or a foreign entity presenting claims on behalf of its interest holders for a reduced rate of withholding under an income tax treaty. Foreign complex trusts and foreign estates generally provide beneficial owner withholding certificates.

Section 1.1441–1(e)(3)(ii) provides the requirements for a valid withholding certificate provided by a qualified intermediary. The paragraph has been

modified to reflect the procedures applicable to qualified intermediaries as set forth in Rev. Proc. 2000–12 (2004–4 I.R.B. 1).

Section § 1.1441–1(e)(3)(iii) provides rules relating to a nonqualified intermediary withholding certificate. Paragraph (e)(3)(iii) generally provided that payee documentation provided with a nonqualified intermediary withholding certificate needed to be attached to the certificate. Similar requirements existed for flow-through withholding certificates and U.S. branch withholding certificates. The regulations have been revised to require that payee documentation be associated with, rather than attached to, a nonqualified intermediary, flow-through, or U.S. branch certificate to obviate the need for a new withholding certificate each time payee documentation is provided to a withholding agent. The regulations do not set forth specific requirements for associating documentation. Any reasonable method may be used to associate documentation with its intermediary withholding certificate.

Paragraph (e)(3)(iii), as originally drafted, required a certification that the withholding certificates or other appropriate documentation attached to a nonqualified intermediary withholding certificate represented all of the persons to whom the intermediary withholding certificate related or that the amounts of income allocable to persons for whom no documentation was provided was separately stated. A similar requirement applied to nonwithholding foreign partnership withholding certificates in § 1.1441–5(c)(3)(iii)(D). The requirement for this certification has been eliminated. The persons on whose behalf a nonqualified intermediary acts will frequently change as persons open and close accounts with the intermediary. Thus, any such certification may be true at the time made, but false at a later point, necessitating a new withholding certificate. The elimination of the certification is not an elimination, however, of the requirement to provide payee withholding certificates to a withholding agent prior to a payment. The certification requirement has also been eliminated for nonwithholding foreign partnerships.

Section 1.1441–1(e)(3)(iii) permits a nonqualified intermediary to provide payee documentation either in the form of withholding certificates or in the form of documentary evidence. The withholding agent is required to derive information from the withholding certificates or other documentary evidence and report payments to each specific payee on whose behalf the nonqualified intermediary acts. However, the regulations were silent on how a withholding agent was to determine the status (U.S. or foreign) or classification (*e.g.,* corporate, partnership, trust, or estate) and other information required to report payments on Form 1042–S from documentary evidence, particularly when that documentary evidence was in a foreign language. Further, although the regulations require a nonqualified intermediary to allocate payments to each payee on whose behalf it acts so that a withholding agent can report payments to each payee on Form 1042–S or Form 1099, the regulations provided no detail on how the allocation information was to be provided.

The regulations have been revised to take these considerations into account. Under § 1.1441–1(e)(3)(iv) as revised, a nonqualified intermediary must associate with its nonqualified intermediary withholding certificate a withholding statement which sets forth the information a withholding agent needs to allocate a payment to each payee on whose behalf the nonqualified intermediary acts and to report the payment. Specifically, the withholding statement must contain for each payee the payee's name, address, country of residence, TIN (if any), the payee's recipient type for Form 1042–S reporting, the applicable rate of withholding, the type of withholding exception applied (if any), and the name of any other intermediary or flow-through entity from whom the payee directly receives the income. Additional information is required if a reduced rate of withholding under an income tax treaty is claimed. The withholding statement may be provided in any manner that the withholding agent and nonqualified intermediary agree, including electronically. It must be updated as frequently as necessary to remain accurate prior to each payment. The regulation does not require a nonqualified intermediary to provide information for a payee unless the payee is a U.S. non-exempt recipient. Information regarding U.S. non-exempt recipients must be provided irrespective of any local laws that prohibit disclosure of an account holder or account information. Therefore, a nonqualified intermediary should obtain waivers from non-disclosure provisions from U.S. non-exempt recipients. To the extent payee information is not provided, whether for a U.S. non-exempt recipient or any other payee, the regulation has been clarified to state explicitly that a withholding agent must withhold under the presumption rules. Further, the nonqualified intermediary remains liable for any tax not withheld by a withholding agent and, unless the nonqualified intermediary itself files information returns, will also be held liable for penalties imposed for failure to file information returns under sections 6721 and 6722.

Many commentators have argued that it is not practical to provide information allocating a payment to each payee prior to each payment because the customers of nonqualified intermediaries are constantly acquiring and disposing of investments. Several commentators made suggestions on how the regulations might ease compliance burdens. One commentator suggested that no allocation information should be required except in the case of income subject to reduced rates of withholding under an income tax treaty and payments made to U.S. non-exempt recipients. This suggestion was rejected. The IRS has provided a mechanism for aggregate reporting of payments in the model qualified intermediary agreement in Rev. Proc. 2000–12. It is inappropriate to extend such treatment to nonqualified intermediaries without the safeguards contained in a qualified intermediary agreement. Other commentators suggested that a withholding agent should withhold the difference between 30 percent of a payment and the claimed reduced rate of withholding in escrow and release the amounts when allocation information is provided. This suggestion was also not accepted. Such a system would leave the escrow funds out of the control of both the IRS and the beneficial owners of the payments. Further, because the nonqualified intermediary would have to provide frequent allocations as soon as possible after the time of payment to have the escrow funds released, it appeared to provide little relief from the pressures inherent in providing allocation information prior to a payment. Other commentators argued that a reduced rate of withholding should be provided at the time of payment with allocation information to follow after the close of the year with various disincentives provided for failure to furnish the allocation information. The regulations generally adopt this approach.

Paragraph (e)(3)(iv)(D) provides alternative procedures that permit a nonqualified intermediary to provide information allocating reportable amounts to payees (including U.S. exempt recipients) by January 31 of the year following the calendar year of payment. The alternative procedures do

not apply to payments made to U.S. non-exempt recipients. Therefore, allocation information for those persons must be provided prior to a payment. Under the alternative procedures, only allocation information may be provided after a payment is made: all other information that is required to be included in a withholding statement and appropriate payee documentation must be provided prior to a payment. The nonqualified intermediary may have reduced rates of withholding apply by identifying pools of income subject to a particular withholding rate (withholding rate pools) and identifying the payees with the appropriate withholding rate pools.

Various penalties apply if a nonqualified intermediary fails to provide information to allocate payments in a withholding rate pool to a withholding agent by January 31. First, the withholding agent must commence withholding on all payments in accordance with the presumption rules. Therefore, 30 percent withholding applies to amounts subject to withholding and 31 percent backup withholding applies to payments of deposit interest and original issue discount on original issue discount obligations of 183 days or less. Under a cure provision, the withheld amounts may be returned, and the alternative procedures may continue to be used, if the nonqualified intermediary provides allocation information by February 14. If the nonqualified intermediary fails to provide allocation information by that date, withholding continues for the taxable year, and all subsequent taxable years, unless the withholding agent provides allocation information prior to a payment. Further, because no allocation information has been provided, the payments are considered never to have been reliably associated with valid documentation and the foreign beneficial owners and other payees on whose behalf the nonqualified intermediary is acting are not entitled to a reduced rate of withholding. Therefore, the nonqualified intermediary shall remain liable under section 1461 for the difference between the amount, if any, withheld by the withholding agent and the amount that should have been withheld under the presumption rules. Any tax due because of an allocation failure will be assessed against the nonqualified intermediary and, if necessary, collected from the assets that the nonqualified intermediary has with the withholding agent. Interest and penalties may also be assessed against the nonqualified intermediary. In particular, paragraph (e)(3)(iv)(*7*) states that a failure to provide allocation information will be presumed to be an intentional failure to file information returns and payee statements under sections 6721 and 6722. The IRS will not, however, hold the withholding agent liable for any tax, interest, or penalties, that are due solely to the failure of the nonqualified intermediary to provide allocation information.

The withholding statement rules and alternative allocation procedures have also been made applicable to U.S. branches of certain foreign banks and insurance companies and flow-through entities. This change, together with certain other changes discussed in this Explanation of Provisions, generally results in nonqualified intermediaries, U.S. branches, and flow-through entities being treated similarly.

Paragraph (e)(3)(iv)(E) has been added to permit the IRS to provide a withholding agent with a notice prohibiting the withholding agent from applying the alternative procedures of paragraph (e)(3)(iv)(D) to an identified nonqualified intermediary (or to a flow-through entity or a U.S. branch of a foreign bank or foreign insurance company) thereby requiring allocation information prior to a payment to have a reduced rate of withholding apply. In addition, the IRS may, in appropriate circumstances issue a notice to a withholding agent prohibiting the withholding agent from applying a reduced rate of withholding under any circumstances, even if allocation information is provided prior to a payment. The IRS contemplates issuing these notices in situations where a nonqualified intermediary, flow-through entity, or U.S. branch fails to pay a tax due or is not applying the rules of the regulations in good faith.

c. Reportable amounts. Foreign intermediaries, flow-through entities, and U.S. branches of foreign banks and insurance companies (other than U.S. branches treated as U.S. persons) are required to provide information with respect to reportable amounts, as defined in § 1.1441–1(e)(3)(vi). Prior to its revision, paragraph (e)(3)(vi) included in the definition of reportable amounts original issue discount or interest (OID) paid on short-term instruments. This definition appeared to include interest and OID regardless of whether those amounts were paid on the redemption of an obligation or from the sale or exchange of an obligation in a transaction other than a redemption. Under the presumption rules, if a withholding agent makes a payment to a foreign intermediary of interest and OID on a short-term obligation and it lacks documentation for such amounts, it must presume that the payee is a U.S. non-exempt recipient and report the income on Form 1099 and backup withhold on the payment. See § 1.6049–5(d)(3)(iii). These rules proved to be impractical for sales of short-term obligations outside the United States. Foreign intermediaries have contended that they do not have the appropriate systems to report gains from sales transactions on Forms 1099 or to provide the proper allocation information to U.S. payors. Moreover, treating the sale or exchange of short-term OID instruments as reportable interest on Form 1099 was inconsistent with rules that treat amounts paid on the sale or exchange, other than redemptions, of such obligations as gross proceeds. See §§ 1.6045–1(d)(3) and 31.3406(b)(2)–2. Because it is more appropriate to treat sales, other than redemptions, of short-term OID instruments as gross proceeds rather than payments of interest or original issue discount, the regulation has been amended to provide that reportable amounts do not include amounts representing interest or OID on the sale or exchange, other than a redemption, of a short-term OID instrument. Therefore, a foreign intermediary, flow-through entity, or U.S. branch is not required to provide information regarding these transactions to a withholding agent as part of its withholding statement.

d. Period of validity. Section 1.1441–1(e)(4)(ii)(A) states that documentary evidence (i.e., documentation other than a withholding certificate) remains valid until ''the earlier of the last day of the third calendar year following the year in which the documentary evidence is created * * * .'' Commentators have stated that it is not clear if a document is ''created'' when it comes into being or when it is provided to a withholding agent. They also stated that basing the validity period on the date a document came into being would be more difficult to administer because they would have to calculate the expiration date in every case rather than assuming that it was valid for three years after it had been received by the withholding agent. In response to these comments, the rule has been amended to permit the validity period to be measured from the date documentation is provided to the withholding agent.

Section 1.1441–1(e)(4)(ii)(B) sets forth the circumstances in which a Form W–8 has an indefinite validity period. Paragraph (e)(4)(ii)(B)(*1*), as originally drafted, provided that a Form W–8 that contained a TIN was valid indefinitely ''if the income for which such certificate is furnished is required to be reported''

on Form 1042–S. Commentators noted that a strict reading of this language could preclude the indefinite validity of a Form W–8 with respect to income that was not subject to reporting, even though other income paid to the same beneficial owner by the withholding agent was subject to reporting. The regulation has been amended to provide that if there is annual reporting of at least one item of income paid by a withholding agent to a beneficial owner, the Form W–8 remains valid even for payments that are not subject to reporting. However, if a withholding agent has a Form W–8 with a TIN but does not make any payments of an amount subject to withholding, for example the withholding agent pays only deposit interest, the form remains valid only for 3 calendar years after the year of receipt. In addition, paragraph (e)(4)(ii)(B)(*8*) has been added to provide an indefinite validity period for a withholding certificate provided by a foreign simple trust or foreign grantor trust for the purposes of transmitting withholding certificates or documentary evidence.

e. Electronic transmission of information. These regulations finalize the regulations proposed in REG–107872–97 (62 FR 53504) relating to the electronic submission of Forms W–8 and make them applicable beginning January 1, 2000. Like the proposed regulations, the final regulations apply only to situations where there is a direct relationship between the withholding agent or payor and the beneficial owner or payee. The final regulations reserve an applicable standard for transmitting forms through tiers of intermediaries. Comments were solicited on this matter in the preamble to the proposed regulations but none were received. The IRS and Treasury recognize the benefits of allowing the electronic transmission of Forms W–8 through one or more intermediaries and continue to solicit comments regarding requirements to ensure the integrity, accuracy, and reliability of electronically transmitted forms through tiers of intermediaries.

f. Requirement of taxpayer identifying number. Section 1.1441–1(e)(4)(vii) provides guidance for when a TIN is required on a Form W–8. Paragraph (e)(4)(vii), as originally drafted, required TINs on withholding certificates from all trusts or estates or the fiduciaries thereof. A number of commentators stated that the TIN requirement was burdensome and unreasonable when applied to pension trusts and large investment trusts. In addition, commentators noted that nonwithholding foreign partnerships, which are treated similarly to foreign simple trusts and foreign grantor trusts, are not required to have a TIN. In response to these comments, the regulations have been amended by eliminating the TIN requirement for foreign trusts other than foreign grantor trusts with 5 or fewer owners.

Paragraph (e)(4)(vii) has also been modified to state that a TIN is required on a withholding certificate from a beneficial owner that is claiming an exemption based on its claim of tax exempt status under section 501(c) or private foundation status. This does not represent a change in the requirements for a withholding certificate from such a beneficial owner. The regulation, as originally drafted, however, contained the requirement only in § 1.1441–9. The requirement of a TIN has been repeated in this paragraph for convenience. Finally, commentators noted that there was a conflict between paragraph (e)(4)(vii), which did not require a TIN on a withholding certificate from a nonwithholding foreign partnership, and § 1.1441–5(c)(3)(iii)(A), which stated that a TIN was required. It was never intended that a nonwithholding foreign partnership withholding certificate used to transmit documentation and information relating to its partners have a TIN. Section 1.1441–5(c)(3)(iii)(A) has been modified accordingly. TINs are required, however, if the withholding foreign partnership is providing a withholding certificate on which it claims an exemption from withholding because the income is effectively connected with the conduct of a trade or business or when it is entitled to claim treaty benefits under section 894 on income for which a TIN is required under § 1.1441–6(b)(1).

g. Requirement to furnish certificates for each account. Generally, each withholding agent that makes a payment to a beneficial owner must obtain a separate withholding certificate. In addition, a withholding agent that is a financial institution must obtain withholding certificates or other appropriate documentation on an account-by-account basis from its customers. Under paragraph (e)(4)(ix)(A)(3) of the regulations, a withholding agent may rely on a withholding certificate held at another branch of the same withholding agent or of a person related to the withholding agent if there is a system in place that permits a withholding agent to access data regarding the withholding certificate and to transmit data that affects the validity of the documentation into the system. A commentator noted that the regulations do not contain provisions, however, to let unrelated withholding agents utilize such a system that they maintain in common or that is maintained by another person. New paragraph (e)(4)(ix)(A)(*4*) has been added to permit unrelated withholding agents to rely on such a system.

h. Special rules for brokers. Section 1.1441–1(e)(4)(ix)(C) provided that a withholding agent may rely on the certification of a broker acting as the agent of a beneficial owner if the broker held a valid beneficial owner withholding certificate or other documentation for that beneficial owner. As originally drafted, the intention of this provision was unclear. It also appeared to be overly broad because it would have permitted a foreign broker to retain beneficial owner documentation and not transmit the documentation to a U.S. withholding agent.

Paragraph (e)(4)(ix)(C) has been redrafted to clarify, and appropriately limit, its application. As redrafted, it applies only to a U.S. broker. It permits such a broker that is acting as an introducing or corresponding broker to provide a clearing broker with a certification that it holds a valid withholding certificate or other appropriate documentation. Without this rule, an introducing or corresponding broker would have to obtain multiple Forms W–8 and provide them to each clearing broker with whom the introducing or corresponding broker executes transactions. In addition, paragraph (e)(4)(ix)(C) has been amended to apply only to readily tradeable instruments, as provided in § 31.3406(h)–3(d), on which it is modeled. An example has been added to illustrate the paragraph.

8. Qualified Intermediary Withholding Certificates

Section 1.1441–1(e)(5) provides rules regarding qualified intermediaries. The rules have been redrafted to more closely conform with the model qualified intermediary agreement published as part of Rev. Proc. 2000–12. The regulation, as originally drafted, contained a requirement that a qualified intermediary disclose U.S. non-exempt recipients ''irrespective of local secrecy laws.'' The model qualified intermediary agreement has specific provisions contained in section 6.04 of the agreement, as well as other sections, that govern the treatment of U.S. persons whenever foreign law, whether or not a ''secrecy'' provision, may preclude disclosure of a U.S. non-exempt recipient. Very generally, those provisions require a qualified intermediary to disinvest a U.S. non-exempt recipient who does not waive its

local law non-disclosure privileges and to collect backup withholding on income and sales proceeds paid to such person. Therefore, the language stating that disclosure is required ''irrespective of local secrecy laws'' has been deleted to avoid creating an inconsistency between the model qualified intermediary agreement and the regulation.

The provisions in paragraph (e)(5) regarding the terms of the withholding agreement a qualified intermediary must enter with the IRS have also been changed to more generally conform with the qualified intermediary agreement as set forth in Rev. Proc. 2000–12. The regulation clarifies the consequences of a qualified intermediary's assumption of primary withholding responsibility. Section 1.1441–1(e)(5)(iv), as originally drafted, stated that a withholding agent making a payment to a qualified intermediary was required to presume full withholding responsibility for that payment unless the qualified intermediary assumed primary withholding responsibility. The regulation was potentially misleading because it could have been interpreted to mean that if a qualified intermediary did not assume primary withholding responsibility, only the U.S. withholding agent was responsible for withholding. Rev. Proc. 2000–12 makes clear, however, that qualified intermediaries are required to withhold in certain circumstances even though they have not assumed primary withholding responsibility. The rule that was initially in paragraph (e)(5)(iv) was intended to relieve a withholding agent making a payment to a qualified intermediary that assumed primary withholding responsibility from the obligation to withhold, not to relieve the qualified intermediary of any withholding requirement. The paragraph has been amended to reflect this intent.

Paragraph (e)(5)(iv) also stated that a qualified intermediary generally would not be permitted to assume withholding and reporting responsibility under section 3406 and chapter 61 of the Internal Revenue Code on a payment made to a U.S. person unless the qualified intermediary was a foreign branch of a U.S. person or a foreign person that had a branch in the United States capable of performing such reporting and withholding. In developing the model qualified intermediary agreement, it became apparent that it was desirable to permit certain qualified intermediaries that did not meet those criteria to assume reporting and withholding responsibility under chapter 61 of the Internal Revenue Code and section 3406. For example, where payments are made through clearing organizations, it may be impractical to require a qualified intermediary to provide information regarding U.S. non-exempt recipients to a U.S. withholding agent. The language that generally limited the ability to assume reporting and withholding responsibility under chapter 61 of the Internal Revenue Code and section 3406 has been eliminated. Whether a qualified intermediary may assume such responsibility is left to the terms of the qualified intermediary agreement. See section 3 of the model qualified intermediary agreement in Rev. Proc. 2000–12.

Section 1.1441–1(e)(5)(v), as originally drafted, required a qualified intermediary to associate a payment with one of three categories of assets: (i) Assets associated with documented foreign persons, (ii) assets associated with documented U.S. payees, and (iii) assets associated with undocumented payees. These three asset categories were subdivided into classes of assets based on withholding rates and reporting requirements. The asset categories did not provide the needed flexibility sought by qualified intermediaries. For example, information regarding U.S. exempt recipient payees, who are not subject to withholding under section 1441, could not be combined with information regarding foreign beneficial owner payees subject to a zero rate of withholding. The model qualified intermediary agreement, as published in Rev. Proc. 2000–12, substituted the withholding rate pool concept for asset classes and this concept has been reflected in the revised regulation. A withholding rate pool is a payment of a single type of income, determined in accordance with the categories of income reported on Form 1042–S or Form 1099, as applicable, that is subject to a single rate of withholding.

Finally, the regulations permit, in accordance with Rev. Proc. 2000–12, a qualified intermediary and a U.S. withholding agent to use a single withholding rate pool for U.S. non-exempt recipients for whom no backup withholding is required and a single withholding rate pool for U.S. non-exempt recipients that are subject to backup withholding provided that the qualified intermediary agreement permits such an arrangement and sufficient information is provided to the withholding agent no later than January 15 following the year of payment that allocates the reportable payments to each U.S. non-exempt recipient account holder. Failure to provide the allocation information timely may result in penalties imposed on the qualified intermediary and the termination of its qualified intermediary agreement. Unlike qualified intermediaries, nonqualified intermediaries and flow-through entities are not permitted to pool payments to U.S. non-exempt recipients. Therefore, information sufficient to allocate the payment to each U.S. non-exempt recipient must be provided before a payment is made or the withholding agent must treat the payment as made to a U.S. payee that has failed to provide a TIN and impose backup withholding.

B. Changes to § 1.1441–2

1. Amounts Subject to Withholding

Section 1.1441–2(a) has been amended to exclude from the definition of amount subject to withholding interest paid as part of the purchase price of an obligation sold between interest payment dates (accrued interest) and an amount representing original issue discount (OID) paid as part of the purchase price of an obligation sold in a transaction other than the redemption of such obligation. The exclusions do not apply, however, if the sale of an obligation is part of a plan the principal purpose of which is to avoid tax and the withholding agent has actual knowledge or reason to know of such plan.

The exclusion of accrued interest and amounts representing OID paid as part of the purchase price of an obligation sold in a transaction other than a redemption were made in response to comments received on § 1.1441–2(b)(3) of the final regulations and proposed regulation § 1.1441–3(b) (REG–114000, 62 FR 53503). Section 1.1441–2(b)(3), as originally drafted, required withholding on OID to the extent the withholding agent had actual knowledge of the amount of the payment that was taxable to the beneficial owner. A withholding agent was treated as having actual knowledge if it had a direct account relationship with the holder of the obligation. Proposed regulation § 1.1441–3(b) would have eliminated the rule that no withholding was required on accrued interest and replaced it with a rule that conformed with the rule applicable to OID on the theory that, from a withholding perspective, the two payments were equivalent. The withholding rules applicable to OID and accrued interest would have required withholding whenever a payment of interest or OID was not subject to an exception, such as the portfolio interest exception, or a payment of OID or accrued interest was presumed made to a foreign person and

the withholding agent could not reliably associate the payment with beneficial owner documentation. Such payments were subject to reporting on Form 1042–S whether or not withholding was imposed.

In Notice 99–8, Treasury and the IRS announced that they would make modifications to the OID and accrued interest rules. The modifications were intended to address criticisms by commentators that the OID and accrued interest rules were unworkable. Commentators argued that debt obligations are often sold in delivery-versus-payment transactions which settle quickly and often involve multiple intermediaries. The requirement to withhold in absence of a beneficial owner withholding certificate would necessarily inhibit the speed with which sales transactions are normally conducted. In addition, they argued that a withholding agent does not necessarily know the amount of OID or accrued interest merely because it has a direct account relationship with the account holder. In addition, custodians stated that sales were often accounted for in systems different from those used to report interest and OID and therefore the reporting requirement of the regulations would require significant systems modifications. They argued that these modifications were not justified because nearly all accrued interest and OID would be from instruments that could qualify for the portfolio interest exception.

Notice 99–8 proposed rules that were intended to require only the withholding agent that had a direct account relationship with a beneficial owner to obtain a Form W–8. Thus, the notice proposed a rule that would require a withholding agent to obtain a withholding certificate only if it received the proceeds from a sale against delivery of the debt obligation or, in the case of a retirement, the withholding agent was the person responsible for paying the owner or crediting its account. The notice would have prevented intermediaries other than the intermediary with the direct account relationship with the beneficial owner from having to obtain a Form W–8 by stating that any withholding agent that effected a transaction for a broker was generally not required to obtain a Form W–8. A broker was defined by reference to § 1.6045–1(a) and generally included a person that makes sales of securities for customers in the ordinary course of that person's trade or business. In addition, the notice proposed to eliminate the rule that presumed knowledge of the amount of OID or interest accrued between interest payment dates merely because there was a direct account relationship with the beneficial owner of an obligation.

Commentators criticized the Notice 99–8 proposal. They argued that the multiple broker exception did not always accomplish its intended purpose because certain participants in a transaction for whom a Form W–8 should not be required could not meet the definition of a broker, particularly since that definition does not include non-U.S. payors that effect sales of obligations at an office outside the United States and certain other persons, such as investment advisors, who might participate in the transaction but did not stand ready to effect sales of securities for others. In addition, the Notice did not solve the problem faced by custodians.

In light of these criticisms, Treasury and the IRS have decided to eliminate the requirement for withholding, and reporting, on accrued interest and an amount representing OID paid on the sale of an OID obligation, other than in a redemption. This change has been effected by eliminating those items from the definition of amounts subject to withholding. Withholding is required, however, if the withholding agent knows or has reason to know that a sale is part of a plan to avoid tax. For example, if a holder of a debt obligation that pays interest that does not qualify for the portfolio interest exception sells the instrument immediately prior to an interest payment date and reacquires the same type of security after the interest payment date and the withholding agent knows, or has reason to know, of this pattern of sales, withholding and reporting of accrued interest is required.

Paragraph (a) has also been amended to state that insurance premiums paid on a contract subject to the section 4371 excise tax are not amounts subject to withholding. As previously drafted, these amounts were excluded from the definition of fixed or determinable annual or periodical (FDAP) income under § 1.1441–1(b)(2)(ii) and therefore were not included in amounts subject to withholding. Excluding insurance premiums from FDAP is inappropriate, however. Insurance premiums fall within the definition of FDAP provided in paragraph (b)(1). Therefore, the better means for exempting premiums subject to the section 4371 excise tax from withholding is to exclude them from the definition of amounts subject to withholding.

2. Fixed or Determinable Annual or Periodical Income

Section 1.1441–2(b)(1)(i) provides the definition of fixed or determinable annual or periodical (FDAP) income. Such income, if from sources within the United States, is generally an amount subject to withholding and therefore also subject to reporting on Form 1042–S if paid to a foreign payee. Paragraph (b)(1)(i) states that amounts that are excluded from gross income under any provision of law ''without regard to the identity of the holder'' are not FDAP income. This provision was, in part, intended to exclude from FDAP qualified scholarship income under section 117. The language, however, failed to accomplish its intended purpose because the section 117 exclusion is dependent on the identity of the person receiving the income—the recipient must be a candidate for a degree at a certain type of educational organization. The paragraph has been revised to state that amounts that are excluded from gross income without regard to the U.S. or foreign status of the owner of the income is not FDAP. In addition, the paragraph has been changed to clarify that amounts excluded from gross income under sections 892 (income of foreign governments) and 115 (income of a U.S. possession) are not excluded from the definition of FDAP since the foreign status of the owner of the income is determinative of whether the exclusions provided by those sections apply. Amounts subject to the section 892 and section 115 exclusions are, therefore, included in the scope of amounts subject to withholding and therefore are reportable on Form 1042–S under section 1461 even though not taxable under section 871 or 881.

3. Original Issue Discount

Section 1.1441–2(b)(3) provides rules governing the treatment of original issue discount. Paragraph (b)(3)(i) describes the amount of OID subject to taxation in the hands of the owner of an OID obligation. Minor changes have been made to this paragraph to clarify the amount of OID that is taxable to the beneficial owner of the obligation.

Paragraph (b)(3)(ii) describes the amount of OID subject to withholding. To conform paragraph (b)(3)(ii) to the changes discussed in section B.1 of this Explanation of Provisions, the paragraph has been revised to require a withholding agent to withhold on OID only upon the redemption of the original issue discount obligation or in any case where the withholding agent knows that a sale, other than a redemption, is being made with the principal purpose of avoiding tax on the obligation. A withholding agent is required to withhold on the actual amount of OID includible in the gross

income of the owner of an obligation if it has actual knowledge of such amount, or, if actual knowledge is lacking, on the entire amount of OID determined under Publication 1212, ''List of Original Issue Discount Instruments'' as if the obligation had been held since issuance.

Paragraph (b)(3)(iii) contained a rule that required a withholding agent to withhold on interest and OID paid on an OID obligation even though it did not know the amount of OID subject to taxation if the withholding agent could not reliably associate the payment with valid documentation. The rule was designed to eliminate an exception to withholding that applied if a withholding agent did not have actual knowledge of the amount of OID that accrued to the holder of the obligation up to the date of sale. If the exception were not eliminated, it was feared that the documentation requirement for portfolio interest could be avoided by selling OID obligations through intermediaries that had no knowledge of the accrued amount of OID. The rule is no longer necessary. Under new § 1.1441–2(a)(6), withholding is required if a withholding agent knows, or has reason to know, that an OID obligation is sold with the principal purpose of avoiding tax. Therefore, the rule as originally contained in paragraph (b)(3)(iii) has been removed. New paragraph (b)(3)(iii) contains the transition rule formerly found in paragraph (b)(3)(iv). The rule has been modified, however. As previously drafted, the rule appeared to eliminate any withholding responsibility by the issuer of an OID obligation or its agent, as formerly contained in Rev. Rul. 68–333 (1968–1 CB 390). As revised, issuers and their agents are subject to any applicable withholding requirements on obligations issued before or after December 31, 2000. The rule now states, however, that withholding on OID obligations is only required by persons other than issuers or their agents with respect to obligations issued after December 31, 2000.

C. Changes to § 1.1441–3

1. Accrued Interest

Section 1.1441–3 provides rules to determine the amount subject to withholding. In accordance with the change made in § 1.1441–2(a)(5), which eliminates interest accrued between sales dates from amounts subject to withholding, § 1.1441–3(b)(2) has been modified to eliminate the requirement that a withholding agent that pays accrued interest must report that interest on Form 1042–S.

32. Coordination With REIT Withholding

As originally drafted, § 1.1441–3(c)(4)(i)(C) required withholding under section 1441 on the portion of a Real Estate Investment Trust (REIT) distribution that is not designated as a capital gain dividend or return of basis. Therefore, § 1.1441–3(c)(4)(i)(C) inadvertently required withholding under section 1441 on a distribution in excess of basis, which under section 301(c)(3) is capital gain from the sale or exchange of stock and, therefore, not subject to withholding under section 1441. To correct this error, paragraph (c)(4)(i)(C) has been amended to provide that withholding under section 1441 is not required on a distribution in excess of basis. A distribution in excess of basis is, however, subject to withholding under section 1445 unless the interest in the REIT is not a U.S. real property interest (e.g., an interest in a domestically controlled REIT under section 897(h)(2)).

D. Changes to § 1441–4

1. Notional Principal Contracts

Section 1.1441–4(a)(3)(i) treats a payment of income on a notional principal contract made to a foreign person as income effectively connected with a trade or business within the United States unless the withholding agent can reliably associate a payment with a withholding certificate that certifies that the payment is not effectively connected. This rule is overly broad because it presumes that any notional principal contract payment made to a foreign person is effectively connected even if the foreign person has no nexus to the United States. As a result, § 1.1441–4(a)(3)(i) has been amended to limit the presumption that notional principal contract income is effectively connected to a U.S. trade or business to those situations in which the income is either paid to a U.S. qualified business unit of a foreign person or the withholding agent otherwise knows, or has reason to know, that the income is effectively connected with the conduct of a U.S. trade or business. It is not expected that a withholding agent would be considered to have reason to know that a notional principal contract payment is effectively connected with the conduct of a trade or business within the United States solely because the foreign person receiving the payment has a qualified business unit in the United States to which a portion of the payment may be allocated pursuant to proposed regulation § 1.863–3(h) (the global dealing regulations).

Section 1.1441–4(a)(3)(ii), as originally drafted, stated that a payment to a financial institution was not treated as effectively connected with the conduct of a trade or business within the United States if the financial institution provided a representation in a master agreement that governs transactions in notional principal contracts between the parties (for example, an International Swaps and Derivatives Association (ISDA) Agreement) or in the confirmation on the particular notional principal contract transaction that the counter party was a U.S. person or a non-U.S. branch of a foreign person.

Commentators requested that the master agreement and confirmation exceptions be expanded to apply to persons other than financial institutions. Section 1.1441–4(a)(3)(ii) has been amended (in the table or corrections at the end of the regulation) to allow any payee, not just a financial institution, to provide in a master agreement or confirmation statement a representation that the payee is a U.S. person or a non-U.S. branch of a foreign person.

2. Withholding on Payments From Individual Retirement Accounts

Section 1.1441–4(b)(1)(ii), as originally drafted, provided that section 1441 applied to distributions from any trust described in section 401(a) made to a nonresident alien individual and to certain other retirement distributions. The result of this rule is that section 1441, rather than section 3405, applies to retirement distributions. This rule considerably eases the burdens that would otherwise apply to retirement distributions.

Commentators noted that the regulations did not provide the same rule for distributions from individual retirement accounts and annuities described in section 408. The regulation has been amended so that those distributions will be subject to section 1441 as well.

E. Changes to § 1441–5

Section 1.1441–5 of the regulations concerns payments made to partnerships, trusts, and estates. As originally drafted, the regulations contained extensive rules for payments made to U.S. and foreign partnerships, but applied the rules of the regulations prior to the publication of TD 8734 to trusts and estates. The trust and estate rules, however, were inconsistent with the rules contained in TD 8734 and were also incomplete. For example, § 1.1441–1(c)(6)(ii)(B) required a withholding agent to determine the

beneficial owner of income paid to a trust or estate under § 1.1441–3(f) and (g) of the regulations in effect prior to January 1, 2001. That section, however, did not determine the beneficial owner of income paid to a trust. In addition, § 1.1441–1(e)(3)(i) stated that a trust or estate was to use a flow-through withholding certificate furnished under § 1.1441–5(e), but that section was reserved in the regulation. The regulation has been revised to provide complete trust and estate rules. Except as noted below, the partnership rules remain generally unchanged; however, several changes were made to clarify those rules.

1. Rules Applicable to U.S. Partnerships, Trusts, and Estates

Section 1.1441–5(b), as originally drafted, provided rules regarding payments to U.S. partnerships. The rules of paragraph (b) have been expanded to cover payments to U.S. trusts and U.S. estates as well. Under revised paragraph (b)(1), a payment to a U.S. partnership, U.S. trust, or U.S. estate is treated as a payment to a U.S. person and, therefore, not subject to withholding under chapter 3 of the Internal Revenue Code. United States partnerships, U.S. trusts, and U.S. estates are required, however, to withhold on payments they make to foreign partners, foreign beneficiaries, or, in the case of grantor trusts, foreign owners. Fiduciaries of U.S. trusts and U.S. estates should take particular note that it is the trust or the estate that is the withholding agent, and Forms 1042 and Forms 1042–S must be filed using the name and TIN of the U.S. trust or U.S. estate, not the name and TIN of the fiduciary.

Under paragraph (b)(2), a U.S. partnership is a withholding agent for a foreign partner's distributable share of partnership income that consists of amounts subject to withholding. A U.S. simple trust is a withholding agent for the distributable net income (DNI) includible in the gross income of a foreign beneficiary to the extent the DNI consists of an amount subject to withholding. Similarly, a U.S. complex trust is a withholding agent on DNI includible in the gross income of a foreign beneficiary to the extent the DNI consists of an amount subject to withholding that is, or is required to be, distributed currently. U.S. simple trusts and complex trusts are permitted to make reasonable estimates of the portion of a distribution that constitute DNI consisting of amounts subject to withholding. A U.S. grantor trust must withhold on any income includible in the taxable income of a foreign person that is treated as an owner to the extent the amount includible consists of an amount subject to withholding.

In the case of a partnership, if amounts subject to withholding are not actually distributed, the U.S. partnership must withhold at the earlier of the time the statement required under section 6031(b) (Form K–1) is mailed or otherwise provided to the partner or the due date for furnishing the statement. In addition, if an amount of income is required to be, but is not actually distributed to the foreign beneficiary of a U.S. simple or complex trust, the U.S. trust must withhold at the time the income is required to be reported on Form 1042–S. A U.S. grantor trust is required to withhold at the time the trust receives the payment or the payment is credited to the trust's account.

2. Payments Made to Foreign Partnerships

Section 1.1441–5(c) provides rules for payments made to foreign partnerships. Generally, the payees of a payment made to a nonwithholding foreign partnership are the partners of the partnership. Paragraph (c)(1)(ii), however, contains rules on when the partnership itself will be regarded as the payee of a payment. That paragraph, as originally drafted, permitted a partnership to be treated as the payee of income if the partnership provided a withholding certificate stating that the payment was effectively connected with the conduct of the partnership's U.S. trade or business. A commentator noted that the paragraph did not treat the partnership as the payee, however, to the extent the income was treated as being effectively connected under the presumption rules in the absence of a withholding certificate.

The paragraph has been revised to treat the partnership as the payee if the income is presumed to be effectively connected in the absence of documentation. For example, if a nonwithholding foreign partnership is receiving income on a notional principal contract and the income is treated as effectively connected income under the presumption rule of § 1.1441–4(b)(3)(i), the nonwithholding foreign partnership, and not the partners, is treated as the payee. In addition, the example in paragraph (c)(1)(iv) has been replaced with several less complex examples that better illustrate the operation of the rules of paragraph (c)(1).

Section 1.1441–5(c)(2) contains rules relating to withholding foreign partnerships. Section 1.1441–5(c)(2)(ii)(A), together with § 1.1461–1(c)(2)(ii)(A), required a withholding foreign partnership to file a Form 1065 and Forms K–1 and exempted the partnership from having to file Form 1042 and Forms 1042–S. The rule was incorrect. A withholding foreign partnership is generally required to withhold on payments and therefore must file a Form 1042, which is an income tax return, and not merely report the amounts on Form 1065. Also, because the IRS matches amounts reported on Forms 1042–S with amounts reported on Form 1042, it was incorrect to substitute Forms K–1 for Forms 1042–S. Therefore, the regulation has been amended to require a withholding foreign partnership to file a tax return on Form 1042 and file information returns on Form 1042–S for amounts subject to withholding paid to, or included in the distributive share of, its foreign partners. A withholding foreign partnership may also be required to file a return on Form 1065 and make the statements on Form K–1 under section 6031 for its partners. However, the IRS may agree in the withholding agreement to modify information reporting requirements to avoid double reporting. A rule that was formerly contained in § 1.1441–7(a), which permitted a withholding foreign partnership to arrange with a withholding agent to have the withholding agent impose withholding on a payment has been removed because a withholding foreign partnership is required to assume withholding responsibility.

Section 1.1441–5(c)(3) provides rules relating to nonwithholding foreign partnerships. Paragraph (c)(3)(iv) has been revised to require a nonwithholding foreign partnership to provide a withholding statement in the same manner as a nonqualified intermediary. In addition, paragraph (c)(3)(v) has been revised to conform with revised § 1.1441–1(b)(6), discussed in section A. 5 of this Explanation of Provisions. Thus, the regulation has been changed to make clear that a nonwithholding foreign partnership has an obligation to report payments even though another withholding agent has withheld the appropriate amount if the nonwithholding partnership has failed to provide adequate information for a withholding agent to report the payments appropriately on Form 1042–S and Form 1099 or the nonwithholding foreign partnership knows, or has reason to know, that the payments were not correctly reported.

Paragraph (d) of § 1.1441–5 provides presumption rules that apply to determine the status of a partnership and its partners if a payment cannot be

reliably associated with valid documentation. The rule in paragraph (d)(3)(ii), which permitted a reduced rate of withholding to be applied to a payment to a nonwithholding foreign partnership if the payment could be associated with a group of documented payees all of whom were subject to the same withholding rate has been removed for the reasons stated in connection with the changes made to § 1.1441–1(b)(3)(v)(C). See section A. 4, of this Explanation of Provisions. Under the revised rule, any payment of an amount subject to withholding paid to a foreign partnership that has not been allocated to a specific payee is presumed made to an undocumented foreign payee and subject to 30 percent withholding.

3. Payments to Foreign Trusts and Estates

Treasury Decision 8734 did not include new provisions regarding withholding on payments by and to foreign trusts and foreign estates. The IRS provided interim guidance in the instructions to Forms W–8BEN and W–8IMY so that withholding agents could replace documentation that was expiring under the withholding regulations with documentation that would meet the requirements of TD 8734. In addition, Notice 99–8 announced that Treasury and the IRS intended to issue regulations that would clarify the withholding obligations of income paid to trusts and estates. Under the instructions and the notice, a payment to a foreign fiduciary was treated as a payment to a foreign intermediary and, therefore, the foreign fiduciary was required to furnish an intermediary withholding certificate on Form W–8IMY. If the trust was a trust described in section 651(a) or a trust, all or a portion of which was treated as owned by the grantor or other persons under sections 671 through 679, the fiduciary was required to attach Forms W–8BEN, Forms W–8EXP, or Forms W–9, from the beneficiaries or owners of the trust. In all other cases, the foreign trustee or executor was required to attach a Form W–8BEN, Form W–8EXP, or if required, Form W–9, completed on behalf of the trust or estate.

Several commentators objected to the requirement that a foreign fiduciary of a complex trust or a foreign estate provide an intermediary withholding certificate. They requested that a withholding certificate be required only from the trust or estate itself. Requiring documentation from a fiduciary also was not consistent with the rules under chapter 61, which generally require a Form W–9 from a trust or estate and ignore the status of the fiduciary. Finally, Notice 99–8 did not provide any presumption rules for payments to foreign trusts and foreign estates.

The regulations now contain a comprehensive set of rules for payments made to foreign trusts and foreign estates in § 1.1441–5(e). A foreign complex trust (as defined in paragraph (c)(25)) and a foreign estate are generally considered beneficial owners of income under § 1.1441–1(c)(6). Therefore, under § 1.1441–5(e)(2), a foreign complex trust or a foreign estate may provide a beneficial owner withholding certificate or other beneficial owner documentation for payments for which a reduced rate of withholding is not claimed under a treaty. Whether such a trust or estate can provide a beneficial owner withholding certificate to claim a reduced rate of withholding under an income tax treaty will depend on whether the trust or estate can claim to be a resident of a treaty country, whether it derives the income under section 894, and the regulations thereunder, and whether treaty benefits are denied under a limitation on benefits provision.

Foreign simple trusts and foreign grantor trusts are not payees or beneficial owners under § 1.1441–5(e)(3), unless the payment is an amount that is treated as effectively connected with the conduct of a U.S. trade or business. The payees of payments to a foreign simple trust or a foreign grantor trust are generally the beneficiaries or owners of the trust. This is similar to the treatment accorded to payments to foreign partnerships, where the partners, rather than the partnership, are generally considered the payees of income paid to the partnership. Therefore, the documentation rules applicable to foreign simple trusts and foreign grantor trusts generally accord with those applicable to foreign partnerships. The trust itself provides a flow-through withholding certificate with which it associates the withholding certificates or, if permitted, documentary evidence of its beneficiaries or owners. The foreign simple trust or foreign grantor trust must also associate with its flow-through withholding certificate a withholding statement identical to that provided by foreign partnerships and nonqualified intermediaries. The IRS may permit a foreign trust to function as a withholding foreign trust. A withholding foreign trust would generally be subject to the same provisions as a withholding foreign partnership.

Section 1.1441–1(e)(6) provides presumption rules for payments of amounts subject to withholding to foreign trusts and estates. Whether a payee is a trust or estate is determined under the general presumption rules of § 1.1441–1(b)(3)(ii). A trust or estate is presumed to be U.S. unless there are indicia of foreign status. If a payee is presumed to be a foreign trust, but its status as a complex, simple, or grantor trust is unknown, it will be treated as a complex trust. If the trust is known to be a foreign simple or grantor trust, its beneficiaries or owners will generally be presumed to be foreign with respect to payments of amounts subject to withholding.

F. Changes to § 1441–6

Section 1.1441–6 contains the provisions for claiming a reduced rate of withholding under an income tax treaty. Section 1.1441–6(b) has been revised to clarify the requirements for claiming treaty benefits. Specifically, the provisions of paragraph (b)(2), as originally drafted, which related to use of documentary evidence, have been moved to newly revised paragraphs (c)(1) and (2) so that all the documentary evidence rules appear in the same paragraph. Paragraph (b)(2) now contains the provisions relating to treaty claims made by interest holders of fiscally transparent entities. Clarifying changes to those rules, which appeared in former paragraph (b)(4), have also been made.

Section 1.1441–6(c)(1) and (2), as originally drafted, required a foreign person to establish residency by obtaining a certified taxpayer identification number (certified TIN) from the IRS. Those provisions required a person claiming a reduced rate of withholding to submit either a certificate of residency or certain other prescribed documentation, plus affidavits regarding compliance with the limitation on benefits provisions of a treaty and with the regulations under section 894. In Notice 99–8, the IRS announced that it would not implement the procedures for obtaining certified TINs until January 1, 2002.

The certified TIN procedures have been removed. New paragraph (b)(3), however, provides authority for the IRS to issue guidance on requirements that a treaty claimant must follow to establish residency and compliance with other requirements imposed by treaties and the Internal Revenue Code, such as limitation on benefits provisions and the requirement that the claimant derive the income under section 894. Treasury and the IRS fully intend to implement such procedures. However, Treasury and the IRS determined that it was appropriate to delay

implementation of the requirement while withholding agents and beneficial owners implement other requirements under the regulation. In addition, the IRS will examine ways to more effectively implement the certified TIN requirement.

Paragraphs (c)(3) and (4) prescribe the types of documentation that can be used to claim treaty benefits for income from marketable instruments paid outside the United States to offshore accounts. Former paragraph (b)(2) stated that documentary evidence could be used, in certain cases, to claim treaty benefits if the documentary evidence was accompanied by the certifications required in paragraph (c)(5). Paragraph (c)(5) contained a requirement that a beneficial owner applying for a certified TIN provide the IRS with certifications, made in an affidavit signed under penalties of perjury, that the beneficial owner was in compliance with any applicable limitation on benefits provisions contained in a treaty and that the beneficial owner derives the income for which treaty benefits will be claimed. It was unclear from the regulations, as drafted, whether the certifications that were provided to withholding agents were required to be made in affidavits signed under penalties of perjury or whether the affidavit requirement only applied to obtaining certified TINs. Although Treasury and the IRS believe it is important that statements regarding compliance with limitation on benefits provisions and section 894 be given in conjunction with documentary evidence provided to a withholding agent, a penalties of perjury requirement would impose a burden that undermines the use of documentary evidence. One reason for permitting use of documentary evidence is to eliminate, as much as possible, the need for a penalties of perjury statement. Thus, the affidavit and penalties of perjury requirements have been eliminated with respect to documentary evidence provided to a withholding agent. The IRS may, however, require an affidavit in connection with the certified TIN procedures that it will establish. The affidavit requirement in paragraph (c)(4), stating that the information on documentary evidence is true and complete, has also been eliminated.

G. Changes to § 1.1441–7

Section 1.1441–7 defines the term *withholding agent* and provides various rules relating to the obligations of withholding agents, including certain due diligence requirements regarding the documentation they receive from payees.

1. Withholding Agent Defined

§ 1.1441–7(a) provides the definition of a withholding agent as well as a withholding agent's obligation to withhold the appropriate amount of taxes and file returns. The section has been revised by removing language stating that a withholding foreign partnership does not have to file Forms 1042–S for payments made to foreign partners because it is required to provide Forms K–1. The reason for this change is discussed in section E. 2 of this Explanation of Provisions.

Some U.S. withholding agents commented that foreign persons, including U.S. branches of foreign persons, were taking the position that they were not withholding agents for purposes of chapter 3 of the Internal Revenue Code. Any person, whether U.S. or foreign, that pays, or has control, receipt, custody, or disposal of an amount subject to withholding is a withholding agent. In addition, with respect to a single item of income, each person that handles the payment is a withholding agent. Thus, there may be more than one withholding agent with respect to a payment of an amount subject to withholding. Examples have been added in new paragraph (a)(2) to illustrate these principles. In particular, examples were added to emphasize that foreign persons that pay, or have control, receipt, or custody, of amounts subject to withholding are withholding agents, including U.S. branches of foreign persons.

2. Reason To Know

Section 1.1441–7(b)(2)(ii), as originally drafted, provided the exclusive rules for determining when a withholding agent that is a financial institution making a payment of income from marketable securities has reason to know that documentation provided to the withholding agent is unreliable. Commentators noted that the language of paragraph (b)(2)(ii) was inconsistent about whether the rules applied only to withholding certificates (i.e., Forms W–8) or also to documentary evidence. In addition, many commentators noted that the rules could not be reasonably applied to documentary evidence received through tiers of intermediaries, because that documentation would often be in a foreign language. They further argued that the rules relating to P.O. box addresses were unreasonable because in some countries P.O. box addresses are standard. Finally, commentators noted that the means for curing otherwise unreliable documentation were, in some instances, too restrictive.

Section 1.1441–7 (b)(3) through (10) have been added to address the comments. Some of the changes made to paragraph (b) reflect rules in the model qualified intermediary agreement contained in Rev. Proc. 2000–12. Paragraphs (b)(4) through (b)(9) relate to the obligations of a withholding agent for account holders that have a direct account relationship with the withholding agent. The rules are limited to direct account relationships because they often rely on account information that will exist only if such a relationship exists. However, under the rules of paragraph (b)(10), which relate to documentation from persons that are not direct account holders, the rules in paragraph (b)(4) through (9) apply to the extent that they rely on information contained on the face of a withholding certificate, documentary evidence, or a withholding statement.

Paragraph (b)(4) contains general rules regarding the reliability of a withholding certificate provided on Form W–8. Paragraph (b)(5) contains rules for when a Form W–8 will be regarded as unreliable to establish a beneficial owner's foreign status and applicable cure provisions. Paragraph (b)(6) contains rules for when a Form W–8 will be regarded as unreliable to establish a beneficial owner's claim of treaty benefits and applicable cure provisions. Paragraph (b)(7) provides general rules relating to documentary evidence. Paragraphs (b)(8) and (b)(9) contain rules regarding documentary evidence that is unreliable to establish a beneficial owner's status as a foreign person or a resident of a treaty country, respectively.

Paragraph (b)(10) provides rules regarding due diligence standards for documentation from payees received through nonqualified intermediaries, flow-through entities, and certain U.S. branches of foreign banks and insurance companies. Under paragraph (b)(10), a withholding agent is required to review the information contained in a withholding statement provided by those entities and may not rely on the information contained in the withholding statement to the extent it does not support the claims made for the payee. A withholding agent must also review each withholding certificate to verify that they support the claims made and are consistent with the information on the withholding statement. Under a transition rule, this review process does not apply to withholding certificates received before December 31, 2001, if the payment is made prior to that date. If a withholding certificate received before December 31, 2001, is relevant to a payment made

after that date, it must be reviewed for accuracy and matched to the information contained in the withholding statement. Finally, a withholding agent must review documentary evidence to determine that there is no obvious indication that the payee is a U.S. non-exempt recipient or no obvious indication that the documentary evidence does not establish the identity of the person who provided the documentation.

H. Changes to § 1.1441–9

Section 1.1441–9 provides the rules for payments made to foreign tax-exempt entities and foreign governments. Paragraph (b)(2) of that section provided that if a tax-exempt organization did not have a determination from the IRS, it could establish its exempt status by attaching to its withholding certificate an opinion of counsel concluding that the organization is described in section 501(c) of the Internal Revenue Code. In addition, if the opinion concluded that the organization was described in section 501(c)(3) and was not a private foundation, an affidavit regarding the operations and support of the organization was required to be attached to the organization's withholding certificate as well. The opinion of counsel and affidavit was required to be renewed whenever the certificate to which it was attached was required to be renewed.

Commentators stated that the requirement that the opinion of tax-exempt status be provided by an attorney was too narrow and that an opinion from any federally authorized tax practitioner, as defined in section 7525(a)(3), should be permitted. In addition, the requirement that the opinion of counsel and the affidavit be renewed whenever the certificate was required to be renewed was confusing because a withholding certificate from a tax-exempt entity requires a TIN and, provided the income paid is subject to reporting, is valid indefinitely absent a change in circumstances.

Treasury and IRS are currently considering whether an opinion issued by a person other than an attorney authorized to practice before the IRS should suffice. Although the Treasury and IRS have not yet concluded that a person other than an attorney should be permitted to provide the opinion, the regulation has been amended to permit that possibility in future guidance. In addition, the requirement to renew the opinion and affidavit has been clarified by stating that it must be renewed if there is a change in facts or circumstances relevant to the organization's status under section 501(c)(3).

I. Changes to § 1.1461–1

Section 1.1461–1 contains requirements regarding the payment and deposit of tax withheld under chapter 3 of the Internal Revenue Code and the filing of a tax return (Form 1042) and information returns (Forms 1042–S) by withholding agents. Generally, the paragraph has been amended to make a withholding agent's obligations clearer.

Paragraphs (b)(2) and (c)(4), as originally drafted, stated that a withholding agent was not required to file a tax return or information return if another withholding agent had done so. Numerous exceptions to the rule were provided. These paragraphs were misleading because they implied that the general rule was that a tax return and information returns were not required if there was another withholding agent in the chain of payment required to file a tax return and information returns. The exceptions to the rule, however, required every withholding agent that made payments of an amount subject to withholding to a foreign person to file a tax return and information returns in every situation, except that a nonqualified intermediary or flow-through entity was not required to file a tax return and information returns for payments that it made provided that it furnished to a withholding agent sufficient information for the withholding agent to correctly withhold and report the payment. Section 1.1461–1(b) and (c) have been clarified to state that a withholding agent that makes a payment of an amount subject to reporting to a recipient must file a Form 1042–S and provide a copy to the recipient. The terms recipient and amount subject to reporting are defined in paragraphs (c)(1)(ii) and (c)(2), respectively. A recipient includes a beneficial owner (including a foreign complex trust and estate), a qualified intermediary, a withholding foreign partnership, a withholding foreign trust, an authorized foreign agent, a U.S. branch treated as a U.S. person, a nonwithholding foreign partnership or foreign simple trust receiving income effectively connected with a U.S. trade or business, any payee presumed to be a foreign person, and any other person for whom a Form 1042–S is required by the instructions to the form. A nonqualified intermediary, a disregarded entity, a flow-through entity, and a U.S. branch that is not treated as a U.S. person are not recipients. Amounts paid to such entities are reported as paid to the persons on whose behalf the entity acts or to the interest holders in the entity. The term amount subject to reporting generally means amount subject to withholding as defined under § 1.1441–2(a).

The regulation has also been clarified by providing a more extensive, but not exhaustive, list of those amounts subject to reporting and those amounts for which there is an exception to reporting. See new § 1.1461–1(c)(2). Paragraph (c)(2)(i)(C), as originally drafted, stated that the amount of effectively connected income that was required to be reported with respect to a notional principal contract was the net income described in § 1.446–3(d). Commentators objected to this requirement because their systems are programmed to report cash payments, not accrued amounts. New paragraph (c)(2)(i)(J) now provides that the amount required to be reported is limited to the amount of cash paid from the notional principal contract.

Finally, the section has been clarified by separately stating the reporting requirements of U.S. withholding agents, qualified intermediaries, nonqualified intermediaries, and flow-through entities. Withholding agents should note, in particular, that information regarding nonqualified intermediaries, flow-through entities, and U.S. branches (other than U.S. branches treated as U.S. persons) in which a recipient is an account holder or an interest holder must be included on Form 1042–S. Such information is important to the IRS's efforts to monitor compliance by such entities and branches with the requirements of the regulations.

J. Changes to the Regulations Under Section 6041

Section 1.6041–1(d) has been revised to require that the amount of a notional principal contract payment reported on Form 1099 is the amount of cash paid on the contract for the calendar year. This change conforms the Form 1099 reporting rule to that under § 1.1461–1(c)(2)(i)(J).

Section 1.6041–4(a)(3) states that a nonqualified intermediary, a qualified intermediary, or certain U.S. branches of foreign banks and insurance companies that receive payments reportable under section 6041 (e.g., rents, notional principal contract income, and other fixed or determinable income) are not required to report the payments on Form 1099 when they, in turn, make the payment to their account holders unless they know the payments are required to be reported and were not so reported. Similar exceptions apply to dividends, gross proceeds from sales of securities, and interest under §§ 1.6042–3(b)(1)(vi),

1.6045–1(g)(v), and 1.6049–5(b)(14), respectively. These provisions have been modified to state that the exception does not apply to a U.S. branch of a foreign bank or insurance company that agrees with a withholding agent to be treated as a U.S. person. The exception is inappropriate in this case because such branches do not provide payee documentation on Form W–9 (or the name, address, TIN, and information allocating the payment to the payee) to a withholding agent. The exception is also inappropriate if a qualified intermediary assumes Form 1099 reporting responsibility. Therefore, the exception has been changed to exclude qualified intermediaries that assume Form 1099 reporting. Finally, the exceptions have been amended to state that a nonqualified intermediary, qualified intermediary, or U.S. branch is deemed to know the required reporting was not done in any case where the intermediary or branch has failed to provide documentation or other information so that another payor can do the reporting.

K. Changes to § 1.6041A–1

Section 1.6041A–1(d)(3)(i)(C) has been added to provide an exception from reporting remuneration for services as a direct seller paid outside the United States. Prior to this change, remuneration for services was subject to reporting in absence of documentation establishing the direct seller's status as a foreign person because the presumption rules of §§ 1.6049–5(d)(2) and 1.1441–1(b)(3)(iii) treated a direct seller as a U.S. non-exempt recipient. Commentators stated that the presumption was inaccurate because most direct sellers abroad are foreign persons. They also argued that obtaining documentation from direct sellers to rebut the presumption was overly burdensome.

L. Changes to § 1.6045–1

Section 1.6045–1(g) provides an exception from Form 1099 reporting for a broker if a customer is considered an exempt foreign person under that section. Under § 1.6045–1(g)(1)(i), a broker may treat a customer as an exempt foreign person if the broker receives a withholding certificate or documentary evidence that establishes the person's status as a foreign person. As originally drafted, the last sentence of § 1.6045–1(g)(1)(i) stated that if a withholding certificate was provided, a withholding agent could rely on the certificate to exempt the customer from reporting only if the certificate included a statement that the beneficial owner had not been, and at the time the certificate was furnished reasonably expected not to be, present in the United States for a period aggregating 183 days or more during each calendar year. The regulation did not state whether the a statement was required if documentary evidence was provided.

Two clarifying changes have been made to § 1.6045–1(g)(1)(i). First, the regulation has been modified to require the statement relating to presence in the United States only from individuals. Second, the regulation states that the statement is not required if documentary evidence is provided. The statement is required on a withholding certificate and not on documentary evidence because a withholding certificate is the documentation required for an account maintained in the United States. Documentary evidence can only be used for amounts paid outside the United States to an offshore account and, therefore, the likelihood that the person may be present in the United States for the relevant period is greatly reduced.

Clarifying changes have also been made to § 1.6045–1(g)(3)(iv). The first sentence of that section stated that a broker could treat an intermediary, as defined in § 1.1441–1(c)(13), as an exempt recipient except when the broker had actual knowledge or reason to know the intermediary was acting on behalf of a U.S. person. The exception should only apply if the intermediary is acting on behalf of a U.S. person who is subject to reporting on Form 1099, that is, a U.S. non-exempt recipient. The regulation has been amended to make this clear. An erroneous cite to nonwithholding foreign partnerships has also been eliminated.

In paragraph (g)(4) of § 1.6045–1, *Example 7* has been amended to reflect the change to the regulations that now generally treats accrued interest as an amount that is not subject to withholding. Under that example, a foreign bank that is a U.S. payor effects a sale of an interest bearing obligation at an office outside the United States on behalf of an undocumented account holder. Under the regulation, as originally drafted, the gross proceeds from the sale, net of accrued interest, were reported on Form 1099 as paid to a payee that was presumed to be a U.S. person. However, because the accrued interest was considered an amount subject to withholding, it was reportable on Form 1042–S. Under the regulation, as revised, accrued interest is treated as an amount that is not subject to withholding. Therefore, both the gross proceeds, net of accrued interest, and the accrued interest are now presumed paid to a U.S. payee and reported on Form 1099 under the presumption rule § 1.6049–5(d)(2). Two additional examples have been added to paragraph (g)(4) to illustrate the operation of the presumption rules on a sale of a short-term original issue discount instrument. These examples were added to make clear that a sale of an OID obligation outside the United States is a gross proceeds transaction and, therefore, under the presumption rule of § 1.6049–5(d)(2), presumed made to a U.S. person. Whether the gross proceeds are reportable depends on whether the exception of § 1.6045–1(a) for sales outside the United States by a non-U.S. payor applies.

M. Changes to § 1.6049–5

Under § 1.6049–5(c)(1), a withholding agent or payor may generally rely on documentary evidence from a foreign payee instead of a beneficial owner withholding certificate on Form W–8 if an amount is paid outside the United States to an offshore account. An offshore account is an account maintained at an office or branch of a U.S. or foreign bank or other financial institution at any location outside the United States and outside of a U.S. possession. Under § 1.6049–5(e), an amount is considered paid outside the United States if the payor completes the acts necessary to effect payment outside the United States.

The regulations do not specifically address whether partners of a nonwithholding foreign partnership, foreign beneficiaries of a foreign simple trust, or foreign owners of a foreign grantor trust can use documentary evidence to establish their status as foreign payees. Paragraph (c)(1) has been amended to permit the use of documentary evidence by foreign partners, beneficiaries, and owners in these situations. Documentary evidence can also be used for purposes of chapter 3 of the Internal Revenue Code by virtue of the incorporation of § 1.6049–5(c)(1) in § 1.1441–1(e)(1)(ii)(A)(2). The use of documentary evidence is appropriate because the regulations generally treat payments to foreign nonwithholding foreign partnerships, foreign simple trusts, and foreign grantor trusts similar to payments made to nonqualified intermediaries, and the latter are permitted to provide documentary evidence on behalf of their account holders.

Section 1.6049–5(c)(4) provides rules that apply to U.S. payors that make payments outside the United States of amounts not subject to withholding (e.g., foreign source income and gross proceeds from the sale of securities) other than deposit interest and interest

or OID on short-term OID instruments. Non-U.S. payors are generally exempt from reporting these payments. There were several issues under paragraph (c)(4) as originally drafted. First, the paragraph was internally inconsistent. Paragraph (c)(4)(i) stated that a bank or other financial institution could establish a payee's status as a foreign person by relying on a written declaration made on an account opening statement that the payee was not a U.S. person in two circumstances: (i) If it was not customary in a country to obtain documentary evidence to establish a person's identity, or (ii) if it was customary to obtain documentary evidence but it was not customary to renew it. Paragraph (c)(4)(iv), however, stated that a bank or financial institution could not rely on a declaration if it was customary to obtain documentary evidence but not customary to renew it. Second, paragraph (c)(4)(i) did not permit a bank or financial institution to rely on documentary evidence to establish a person's foreign status if there was indicia of U.S. status, including employment by a U.S.-based multinational organization. A commentator noted that prohibiting use of documentary evidence merely because an account holder worked for a U.S.-based multinational organization was overly broad because such organizations commonly employ local employees and a withholding agent may not know whether a particular multinational is U.S. based. Finally, paragraph (c)(4)(iii) required a bank or financial institution that relied upon a declaration of foreign status or non-renewable documentary evidence to send a negative confirmation statement each year to the account holder stating that the account holder was being treated as a foreign payee and that the account holder was obligated to notify the bank or financial institution if it became a U.S. citizen or U.S. resident. A commentator argued that the expense of such a requirement was not justified. The commentator argued that if an account holder legitimately establishes foreign status, it is unlikely that the account holder will become a U.S. citizen or resident and that if it does, there are factors, such as a change of address, that will indicate a change in the person's status.

Paragraph (c)(4) has been amended to remove the inconsistency and to take the commentators' comments into account. Under paragraph (c)(4)(ii), as revised, a declaration of foreign status may be used only if it is not customary to obtain documentary evidence. The declaration may be relied upon only if there is no address or other indicia of U.S. status. If it is customary in the country where a bank or financial institution maintains a branch or office to obtain, but not renew, documentary evidence, then the bank or financial institution may rely on the documentary evidence without the need to renew it provided that it may rely on the documentation to establish foreign status under the due diligence rules of § 1.1441–7(b)(7) and (8). The restriction on using such documentation in the case of a U.S. based multinational employee has been removed. If, however, the bank or financial institution may rely on the documentary evidence as establishing foreign status even though there are indicia of U.S. status, it can rely on the documentary evidence only for a period of three full calendar years after the calendar year in which it is received. Finally, neither the documentation rule of paragraph (c)(4)(i) nor the declaration rule of paragraph (c)(4)(ii) requires a payor to send a negative confirmation.

Section 1.6049–5(d) contains presumption rules that generally apply for chapter 61 reporting if a payor lacks required documentation from a payee. Paragraph (d)(2) governs payments other than payments to intermediaries or flow-through entities. Paragraph (d)(2)(i) has been clarified to state that the presumption rules of § 1.1441–1(b)(3)(iii)(D) (payments to offshore accounts) do not apply to amounts that are not subject to withholding. As originally drafted, paragraph (d)(2)(i) stated that the rules of § 1.1441–1(b)(3)(iii) applied to all payments, irrespective of whether they were subject to withholding. Section 1.1441–1(b)(3)(iii)(D), however, stated that it did not apply to amounts that were not subject to withholding. Revised paragraph (d)(2)(i) eliminates the inconsistency. Therefore, payments of deposit interest, and interest or OID arising from the redemption of an obligation described in section 871(g)(1)(B)(i) paid to an offshore account are presumed paid to a U.S. payee. In addition, gross proceeds, which are not amounts subject to withholding, are also treated as paid to U.S. persons under § 1.6045–1(g)(1)(i). Under the exceptions of §§ 1.6045–1(a)(1) and 1.6045–1(g)(3), however, gross proceeds from the sale of a security by a non-U.S. payor effected outside the United States are not subject to reporting.

The grace period rule in § 1.6049–5(d)(2)(ii), as originally drafted, did not cover the same payments as were covered under the grace period rule of § 1.1441–1(b)(3)(iv) even though the latter regulation cross-references § 1.6049–5(d)(2)(ii). For example, the rule under the 1441 regulations, but not the rule under section 6049, covered dividends from any redeemable security issued by an investment company and amounts paid with respect to loans of securities. Paragraph 5(d)(2)(ii) has been amended to cover the same payments as are covered by the grace period rule of § 1.1441–1(b)(3)(iv). In addition, paragraph (d)(2)(ii) prior to amendment stated that the grace period expired on the earlier of the of the 90th day after the grace period began, the date on which documentation is provided, or the last day of the calendar year. Commentators stated that terminating the grace period at the end of a calendar year complicated systems programming because there was a shrinking grace period for payments made within 90 days of the end of the year. The requirement to terminate the grace period as of the close of a calendar year has been eliminated because it is not necessary.

Paragraph (d)(3) provides presumption rules for payments made to foreign intermediaries. With exceptions for deposit interest and interest and OID on short-term obligations, payments to foreign intermediaries are presumed made to foreign payees. Paragraph (d)(4) provided different presumptions for payments to partnerships. Under that paragraph, payments made to foreign partnerships were generally presumed made to U.S. payees, even if the partnership established its status as a foreign partnership. Commentators argued that the disparate treatment between intermediaries and partnerships was not justified because they are treated similarly for other purposes under the regulations. The differences also complicated payors' information systems. In response to these comments, the presumption rules of paragraph (d)(3) have been revised to apply to payments made to all flow-through entities (nonwithholding foreign partnerships, foreign simple trusts, and foreign grantor trusts).

Paragraph (d)(3)(ii) provides rules for payments of amounts that are not subject to withholding (*e.g.*, foreign source income and gross proceeds from the sales of securities) other than deposit interest and interest and OID on short-term obligations paid to foreign intermediaries and flow-through entities. The paragraph required a payor to presume that a payment was made to an exempt recipient unless the payor had actual knowledge that any person for whom the intermediary was collecting the payment was a U.S. non-

exempt recipient. In that case, the payment was treated as made to the U.S. non-exempt recipient. The last sentence of the paragraph, however, also appeared to require a payor to presume that a payment was made to a U.S. non-exempt recipient if it appeared that the payment might be collected on behalf of a U.S. non-exempt payee, because, for example, an intermediary provided Forms W–9 for some payees but did not allocate a payment to any particular payee. The application of the last sentence of the paragraph, however, was uncertain.

Paragraph (d)(3)(ii) has been revised to generally reflect the principle that a payment of an amount that is not subject to withholding (other than short-term OID and deposit interest) made to an intermediary should not be subject to Form 1099 reporting by a payor if the payment would not be subject to Form 1099 reporting if made to a U.S. non-exempt recipient by an intermediary that is not a U.S. payor. Thus, the general rule is that a payment covered by the paragraph (i.e., foreign source income or gross proceeds) is presumed paid to an exempt recipient unless the payor has actual knowledge that the amount is attributable to a U.S. non-exempt recipient.

As originally drafted, § 1.6049–5(d)(3)(iii) provided special presumption rules for payments of deposit interest and interest or OID from short-term original issue discount obligations to foreign intermediaries. It was not clear whether the presumption rule of the paragraph applied to the portion of the sale proceeds representing OID from the sale or exchange of short-term OID instrument in a transaction other than a redemption.

Under paragraph (d)(3)(iii) as revised, a payment of deposit interest or interest or OID on the redemption of a short-term original issue discount obligation paid to an intermediary or flow-through entity is presumed paid to a U.S. payee. The paragraph does not apply to sales or exchanges (other than redemption) of short-term OID instruments. Such sales or exchanges are treated as gross proceeds transactions, in conformance with the rules in §§ 1.6045–1(c) and (d)(3) and 31.3406(b)(2)–2, and are subject to the general presumption rule for payments made to foreign intermediaries under § 1.6049–5(d)(3)(ii). Therefore, gross proceeds from the sale or exchange (other than a redemption) of a short-term OID instrument will generally be presumed paid as made to an exempt recipient. Intermediaries that are U.S. payors, however, may themselves be required to report such gross proceeds under § 1.6045–1(c) and (1)(g)(i) and the presumption rule of § 1.6049–5(d)(2), which applies to payments made to persons other than an intermediary because under that section gross proceeds are generally considered paid to U.S. payees under that section.

Paragraph (d)(3)(iii)(B) contained a presumption rule for payments made to exempt recipients that had not provided documentation that they were acting as intermediaries. The scope and application of this rule were unclear. Paragraph (d)(3)(iii)(B) has been completely revised and now states that a payment made to an exempt recipient that the payor knows, or has reason to know, is acting as an intermediary is subject to the presumptions that apply to intermediaries.

N. Withholding Certificate Transitional Issues

The changes made by this regulation will require revisions to instructions to the withholding certificates issued on Form W–8 and certain minor changes to the forms themselves. Until Forms W–8, and the instructions, are revised withholding agents may rely on Forms W–8BEN, W–8ECI, W–8EXP, and W–8IMY as currently in effect but should take into account, particularly with respect to Form W–8IMY used by intermediaries and flow-through entities, that the instructions to the form do not reflect the withholding statement requirements contained in this regulation. In particular, withholding agents and providers of Form W–8IMY should furnish a withholding statement in connection with the form that conforms to § 1.1441–1(e)(3)(iv).

Special Analyses

It has been determined that this Treasury decision is not a significant regulatory action as defined in Executive Order 12866. Therefore, a regulatory assessment is not required. It has also been determined that section 553(b) of the Administrative Procedure Act (5 U.S.C. chapter 5) does not apply to these regulations. Finally, it has been determined that the Regulatory Flexibility Act (5 U.S.C. chapter 6) does not apply to these regulations because the regulations do not impose a collection of information on small entities. Pursuant to 7805(f) of the Internal Revenue Code, the notice of proposed rulemaking preceding these regulations (61 FR 17614) was submitted to the Small Business Administration for comment on its impact on small business.

Drafting Information

The principal authors of these regulations are Carl Cooper, Laurie Hatten-Boyd, and Kate Hwa of the Office of Associate Chief Counsel (International).

List of Subjects

26 CFR Part 1

Income taxes, Reporting and recordkeeping requirements.

26 CFR Part 31

Employment taxes, Income taxes, Penalties, Pensions, Railroad retirement, Reporting and recordkeeping requirements, Social security, Unemployment compensation.

Adoption of Amendments to Regulations

Accordingly, 26 CFR parts 1 and 31 are amended as follows:

PART 1—INCOME TAXES

Paragraph 1. The authority citation for part 1 continues to read in part as follows:

Authority: 26 U.S.C. 7805 * * *

Par. 2. Effective January 1, 2001, § 1.1441–0 is amended by:

1. Revising the entry for § 1.1441–1(b)(2)(vii).
2. Adding entries for § 1.1441–1(b)(2)(vii)(A) through (F).
2a. Revising the entry for § 1.1441–1(b)(3)(ii).
3. Adding entries for § 1.1441–1(b)(3)(ii)(A) through (C).
4. Revising the entry for § 1.1441–1(b)(3)(iv).
5. Revising entry for § 1.1441–1(b)(3)(v)(B).
6. Revising the entry for § 1.1441–1(b)(3)(vi).
7. Adding entries for § 1.1441–1(b)(3)(vii)(A) and (B).
8. Adding entries for § 1.1441–1(b)(6)(i) and (ii).
9. Revising the entries for § 1.1441–1(c)(6)(ii), (c)(6)(ii)(B), (c)(6)(ii)(C), and adding a new entry for § 1.1441–1(c)(6)(ii)(D).
10. Adding entries for § 1.1441–1(c)(12) through (29).
11. Revising the entry for § 1.1441–1(d)(4).
12. Revising the entry for § 1.1441–1(e)(3)(iii), (e)(3)(iv), and (e)(3)(iv)(A) through (C).
13. Adding entries for § 1.1441–1(e)(3)(iv)(D) and (E).
14. Adding entries for § 1.1441–1(e)(4)(iv)(A), (B), and (C).
15. Revising the entries for § 1.1441–1(e)(5)(v) and (e)(5)(v)(B) and (C).
16. Revising the entries for § 1.1441–2(b)(3)(i) and (ii).

17. Removing the entries for § 1.1441–2(b)(3)(iii) and (iv).
18. Revising the entry for § 1.1441–5(a).
19. Revising the entries for § 1.1441–5(b), (b)(1), (b)(2), and (b)(2)(i), adding entries for § 1.1441–5(b)(2)(i)(A) and (b)(2)(i)(B), and revising entries for § 1.1441–5(b)(2)(ii), (b)(2)(iii), (b)(2)(iv), and (b)(2)(v).
20. Revising the entry for § 1.1441–5(c)(1)(iv).
21. Removing the entries for § 1.1441–5(c)(2)(ii)(A) and (B).
21. Revising the entry for § 1.1441–5(c)(3).
22. Revising the entries for § 1.1441–5(c)(3)(iii).
23. Revising the entries for § 1.1441–5(c)(3)(iv) and (v).
24. Revising the entry for § 1.1441–5(d).
25. Removing the entries for § 1.1441–5(d)(3)(i) through (d)(3)(iv).
26. Revising the entry for § 1.1441–5(d)(4).
27. Revising the entry for § 1.1441–5(e).
28. Adding entries for § 1.1441–5(e)(1), (e)(2), (e)(3), (e)(3)(i), (e)(3)(ii), (e)(4), (e)(5), (e)(5)(i), (e)(5)(ii), (e)(5)(iii), (e)(5)(iv), (e)(5)(v), (e)(6), (e)(6)(i), (e)(6)(ii) and (e)(6)(iii).
29. Revising the entries for § 1.1441–6(b)(2), (b)(2)(i) and (b)(2)(ii).
30. Adding entries for § 1.1441–6(b)(2)(iii) and (b)(2)(iv).
31. Revising the entry for § 1.1441–6(b)(3).
32. Revising the entry for § 1.1441–6(b)(4).
33. Removing the entries for § 1.1441–6(b)(4)(i), (b)(4)(ii), (b)(4)(ii)(A), (b)(4)(ii)(B), (b)(4)(iii), and (b)(4)(iv).
34. Removing the entry for § 1.1441–6(b)(5).
35. Revising the entry for § 1.1441–6(c).
36. Revising the entry for § 1.1441–6(c)(2).
37. Removing the entries for § 1.1441–6(c)(2)(i), (c)(2)(ii), and (c)(2)(iii).
38. Revising the entries for § 1.1441–6(c)(5), (c)(5)(i) and (c)(5)(ii).
39. Revising the entry for § 1.1441–6(e).
40. Adding entries for § 1.1441–7(a)(1) and (2).
41. Removing the entries for § 1.1441–7(b)(2)(i) and (b)(2)(ii).
42. Revising the entry for § 1.1441–7(b)(3).
43. Adding entries for § 1.1441–7(b)(4), (b)(4)(i), (b)(4)(ii), and (b)(5) through (b)(11).

The additions and revisions read as follows.

§ 1.1441–0 Outline of regulation provisions for section 1441.

* * * * *

§ 1.1441–1 Requirement for the deduction and withholding of tax on payments to foreign persons.

* * * * *

(b) * * *
(2) * * *
(vii) Rules for reliably associating a payment with a withholding certificate or other appropriate documentation.
(A) Generally.
(B) Special rules applicable to a withholding certificate from a nonqualified intermediary or flow-through entity.
(C) Special rules applicable to a withholding certificate provided by a qualified intermediary that does not assume primary withholding responsibility.
(D) Special rules applicable to a withholding certificate provided by a qualified intermediary that assumes primary withholding responsibility under chapter 3 of the Internal Revenue Code.
(E) Special rules applicable to a withholding certificate provided by a qualified intermediary that assumes primary Form 1099 reporting and backup withholding responsibility but not primary withholding under chapter 3.
(F) Special rules applicable to a withholding certificate provided by a qualified intermediary that assumes primary withholding responsibility under chapter 3 and primary Form 1099 reporting and backup withholding responsibility and a withholding certificate provided by a withholding foreign partnership.
(3) * * *
(ii) Presumptions of classification as individual, corporation, partnership, etc.
(A) In general.
(B) No documentation provided.
(C) Documentary evidence furnished for offshore account.

* * * * *

(iv) Grace period.
(v) * * *
(B) Beneficial owner documentation or allocation information is lacking or unreliable.

* * * * *

(vi) U.S. branches.
(vii) * * *
(A) In general.
(B) Special rule for offshore accounts.

* * * * *

(6) * * *
(i) In general.
(ii) Example.

* * * * *

(c) * * *
(6) * * *
(ii) Special rules.

* * * * *

(B) Foreign partnerships.
(C) Foreign simple trusts and foreign grantor trusts.
(D) Other foreign trusts and foreign estates.

* * * * *

(12) Payee.
(13) Intermediary.
(14) Nonqualified intermediary.
(15) Qualified intermediary.
(16) Withholding certificate.
(17) Documentary evidence; other appropriate documentation.
(18) Documentation.
(19) Payor.
(20) Exempt recipient.
(21) Non-exempt recipient.
(22) Reportable amounts.
(23) Flow-through entity.
(24) Foreign simple trust.
(25) Foreign complex trust.
(26) Foreign grantor trust.
(27) Partnership.
(28) Nonwithholding foreign partnership.
(29) Withholding foreign partnership.
(d) * * *
(4) When a payment to an intermediary or flow-through entity may be treated as made to a U.S. payee.
(e) * * *
(3) * * *
(iii) Intermediary withholding certificate from a nonqualified intermediary.
(iv) Withholding statement provided by nonqualified Intermediary.
(A) In general.
(B) General requirements.
(C) Content of withholding statement.
(D) Alternative procedures.
(E) Notice procedures.

* * * * *

(4) * * *
(iv) * * *
(A) In general.
(B) Requirements.
(C) Special requirements for transmission of Forms W–8 by an intermediary. [Reserved]

* * * * *

(5) * * *
(v) Withholding statement.

* * * * *

(B) Content of withholding statement.
(C) Withholding rate pools.

* * * * *

§ 1.1441–2 Amounts subject to withholding.

* * * * *

(b) * * *
(3) * * *
(i) Amount subject to tax.
(ii) Amounts subject to withholding.

* * * * *

§ 1.1441–5 Withholding on payments to partnerships trusts, and estates.

(a) In general.
(b) Rules applicable to U.S. partnerships, trusts, and estates.
(1) Payments to U.S. partnerships, trusts, and estates.
(2) Withholding by U.S. payees.
(i) U.S. partnerships.
(A) In general.
(B) Effectively connected income of partners.
(ii) U.S. simple trusts.
(iii) U.S. complex trusts and U.S. estates.
(iv) U.S. grantor trusts.
(v) Subsequent distribution.
(c) * * *
(1) * * *
(iv) Examples.

* * * * *

(3) Nonwithholding foreign partnerships.

* * * * *

(iii) Withholding certificate from a nonwithholding foreign partnership.

(iv) Withholding statement provided by nonwithholding foreign partnership.

(v) Withholding and reporting by a foreign partnership.

(d) Presumption rules.

* * * * *

(4) Determination by a withholding foreign partnership of the status of its partners.

(e) Foreign trusts and estates.

(1) In general.

(2) Payments to foreign complex trusts and estates.

(3) Payees of payments to foreign simple trusts and foreign grantor trusts.

(i) Payments for which beneficiaries and owners are payees.

(ii) Payments for which trust is payee.

(4) Reliance on claim of foreign complex trust or foreign estate status.

(5) Foreign simple trust and foreign grantor trust.

(i) Reliance on claim of foreign simple trust or foreign grantor trust status.

(ii) Reliance on claim of reduced withholding by a foreign simple trust or foreign grantor trust for its beneficiaries or owners.

(iii) Withholding certificate from foreign simple trust or foreign grantor trust.

(iv) Withholding statement provided by a foreign simple trust or foreign grantor trust.

(v) Withholding foreign trusts.

(6) Presumption rules.

(i) In general.

(ii) Determination of status as U.S. or foreign trust or estate in the absence of documentation.

(iii) Determination of beneficiary or owner's status in the absence of certain documentation.

* * * * *

§ 1.1441–6 Claim of reduced withholding under an income tax treaty.

* * * * *

(b) * * *

(2) Payment to fiscally transparent entity.

(i) In general.

(ii) Certification by qualified intermediary.

(iii) Dual treatment.

(iv) Examples.

(3) Certified TIN.

(4) Claim of benefits under an income tax treaty by a U.S. person.

(c) Exemption from requirement to furnish a taxpayer identifying number and special documentary evidence rules for certain income.

* * * * *

(2) Income to which special rules apply.

* * * * *

(5) Statements regarding entitlement to treaty benefits.

(i) Statement regarding conditions under a limitation on benefits provision.

(ii) Statement regarding whether the taxpayer derives the income.

* * * * *

(e) Competent authority.

* * * * *

§ 1.1441–7 General provisions relating to withholding agents.

(a) * * *

(1) In general.

(2) Examples.

(b) * * *

(3) Financial institutions—limits on reason to know.

(4) Rules applicable to withholding certificates.

(i) In general.

(ii) Examples.

(5) Withholding certificate—establishment of foreign status.

(6) Withholding certificate—claim of reduced rate of withholding under treaty.

(7) Documentary evidence.

(8) Documentary evidence—establishment of foreign status.

(9) Documentary evidence—claim of reduced rate of withholding under treaty.

(10) Limits on reason to know—indirect account holders.

(11) Additional guidance.

* * * * *

Par. 3. Effective January 1, 2001, section 1.1441–1 is amended by:

1. Revising the first sentence of paragraph (b)(2)(i).

2. Revising paragraphs (b)(2)(iv)(A), (b)(2)(iv)(B)(*3*), and (b)(2)(iv)(C).

3. Revising paragraphs (b)(2)(v)(A) and (b)(2)(v)(B).

4. Revising paragraph (b)(2)(vii).

5. Revising the first sentence of paragraph (b)(3)(i).

6. Revising paragraph (b)(3)(ii).

7. Revising paragraphs (b)(3)(iii)(C) and (b)(3)(iii)(D).

8. Revising paragraph (b)(3)(iv).

9. Revising paragraph (b)(3)(v).

10. Revising paragraphs (b)(3)(vi) and (b)(3)(vii).

11. Revising paragraph (b)(6).

12. Revising paragraph (c)(2).

13. Revising paragraph (c)(6).

14. Adding paragraphs (c)(12) through (c)(29).

15. Revising paragraphs (d)(2) through (d) (4).

16. Revising paragraphs (e)(1)(ii)(A)(*1*), (e)(1)(ii)(A)(*3*), and (e)(1)(ii)(A)(*4*).

17. Revising paragraph (e)(3).

18. Revising paragraph (e)(4)(ii)(A).

19. Revising paragraphs (e)(4)(ii)(B)(*1*) through (e)(4)(ii)(B)(*4*) and (e)(4)(ii)(B)(*6*), and adding paragraph (e)(4)(ii)(B)(*8*).

20. Revising paragraph (e)(4)(iv).

21. Revising paragraph (e)(4)(vii).

22. Adding paragraph (e)(4)(ix)(A)(*4*) and revising paragraph (e)(4)(ix)(C).

23. Revising paragraph (e)(5)(i) and (e)(5)(iii) through (e)(5)(v).

The additions and revisions read as follows:

§ 1.1441–1 Requirement for the deduction and withholding of tax on payments to foreign persons.

* * * * *

(b) * * *

(2) *Determination of payee and payee's status*—(i) *In general.* Except as otherwise provided in this paragraph (b)(2) and § 1.1441–5(c)(1) and (e)(3), a payee is the person to whom a payment is made, regardless of whether such person is the beneficial owner of the amount (as defined in paragraph (c)(6) of this section). * * *

* * * * *

(iv) *Payments to a U.S. branch of certain foreign banks or foreign insurance companies*—(A) *U.S. branch treated as a U.S. person in certain cases.* A payment to a U.S. branch of a foreign person is a payment to a foreign person. However, a U.S. branch described in this paragraph (b)(2)(iv)(A) and a withholding agent (including another U.S. branch described in this paragraph (b)(2)(iv)(A)) may agree to treat the branch as a U.S. person for purposes of withholding on specified payments to the U.S. branch. Notwithstanding the preceding sentence, a withholding agent making a payment to a U.S. branch treated as a U.S. person under this paragraph (b)(2)(iv)(A) shall not treat the branch as a U.S. person for purposes of reporting the payment made to the branch. Therefore, a payment to such U.S. branch shall be reported on Form 1042–S under § 1.1461–1(c). Further, a U.S. branch that is treated as a U.S. person under this paragraph (b)(2)(iv)(A) shall not be treated as a U.S. person for purposes of the withholding certificate it may provide to a withholding agent. Therefore, the U.S. branch must furnish a U.S. branch withholding certificate on Form W–8 as provided in paragraph (e)(3)(v) of this section and not a Form W–9. An agreement to treat a U.S. branch as a U.S. person must be evidenced by a U.S. branch withholding certificate described in paragraph (e)(3)(v) of this section furnished by the U.S. branch to the withholding agent. A U.S. branch described in this paragraph (b)(2)(iv)(A) is any U.S. branch of a foreign bank subject to regulatory supervision by the Federal Reserve Board or a U.S. branch of a foreign insurance company required to file an annual statement on a form approved by the National Association of Insurance Commissioners with the Insurance Department of a State, a Territory, or the District of Columbia. The Internal Revenue Service (IRS) may approve a list of U.S. branches that may qualify for treatment as a U.S. person under this paragraph (b)(2)(iv)(A) (see § 601.601(d)(2) of this chapter). See § 1.6049–5(c)(5)(vi) for the treatment of U.S. branches as U.S. payors if they make a payment that is subject to reporting under chapter 61 of the Internal Revenue Code. Also see § 1.6049–5(d)(1)(ii) for the treatment of

U.S. branches as foreign payees under chapter 61 of the Internal Revenue Code.

(B) * * *

(*3*) As a payment to a foreign person of income that is effectively connected with the conduct of a trade or business in the United States if the withholding agent cannot reliably associate the payment with a withholding certificate from the U.S. branch or any other certificate or other appropriate documentation from another person. See § 1.1441–4(a)(2)(ii).

(C) *Consequences to the U.S. branch.* A U.S. branch that is treated as a U.S. person under paragraph (b)(2)(iv)(A) of this section shall be treated as a separate person solely for purposes of section 1441(a) and all other provisions of chapter 3 of the Internal Revenue Code and the regulations thereunder (other than for purposes of reporting the payment to the U.S. branch under § 1.1461–1(c) or for purposes of the documentation such a branch must furnish under paragraph (e)(3)(v) of this section) for any payment that it receives as such. Thus, the U.S. branch shall be responsible for withholding on the payment in accordance with the provisions under chapter 3 of the Internal Revenue Code and the regulations thereunder and other applicable withholding provisions of the Internal Revenue Code. For this purpose, it shall obtain and retain documentation from payees or beneficial owners of the payments that it receives as a U.S. person in the same manner as if it were a separate entity. For example, if a U.S. branch receives a payment on behalf of its home office and the home office is a qualified intermediary, the U.S. branch must obtain a qualified intermediary withholding certificate described in paragraph (e)(3)(ii) of this section from its home office. In addition, a U.S. branch that has not provided documentation to the withholding agent for a payment that is, in fact, not effectively connected income is a withholding agent with respect to that payment. See paragraph (b)(6) of this section and § 1.1441–4(a)(2)(ii).

* * * * *

(v) *Payments to a foreign intermediary*—(A) *Payments treated as made to persons for whom the intermediary collects the payment.* Except as otherwise provided in paragraph (b)(2)(v)(B) of this section, the payee of a payment to a person that the withholding agent may treat as a foreign intermediary in accordance with the provisions of paragraph (b)(3)(ii)(C) or (b)(3)(v)(A) of this section is the person or persons for whom the intermediary collects the payment. Thus, for example, the payee of a payment that the withholding agent can reliably associate with a withholding certificate from a qualified intermediary (defined in paragraph (e)(5)(ii) of this section) that does not assume primary withholding responsibility or a payment to a nonqualified intermediary are the persons for whom the qualified intermediary or nonqualified intermediary acts and not to the intermediary itself. See paragraph (b)(3)(v) of this section for presumptions that apply if the payment cannot be reliably associated with valid documentation. For similar rules for payments to flow-through entities, see § 1.1441–5(c)(1) and (e)(3).

(B) *Payments treated as made to foreign intermediary.* The payee of a payment to a person that the withholding agent may treat as a qualified intermediary is the qualified intermediary to the extent that the qualified intermediary assumes primary withholding responsibility under paragraph (e)(5)(iv) of this section for the payment. For example if a qualified intermediary assumes primary withholding responsibility under chapter 3 of the Internal Revenue Code but does not assume primary reporting or withholding responsibility under chapter 61 or section 3406 of the Internal Revenue Code and therefore provides Forms W–9 for U.S. non-exempt recipients, the qualified intermediary is the payee except to the extent the payment is reliably associated with a Form W–9 from a U.S. non-exempt recipient.

* * * * *

(vii) *Rules for reliably associating a payment with a withholding certificate or other appropriate documentation*—(A) *Generally.* The presumption rules of paragraph (b)(3) of this section and §§ 1.1441–5(d) and (e)(6) and 1.6049–5(d) apply to any payment, or portion of a payment, that a withholding agent cannot reliably associate with valid documentation. Generally, a withholding agent can reliably associate a payment with valid documentation if, prior to the payment, it holds valid documentation (either directly or through an agent), it can reliably determine how much of the payment relates to the valid documentation, and it has no actual knowledge or reason to know that any of the information, certifications, or statements in, or associated with, the documentation are incorrect. Special rules apply for payments made to intermediaries, flow-through entities, and certain U.S. branches. See paragraph (b)(2)(vii)(B) through (F) of this section. The documentation referred to in this paragraph (b)(2)(vii) is documentation described in paragraphs (c)(16) and (17) of this section upon which a withholding agent may rely to treat the payment as a payment made to a payee or beneficial owner, and to ascertain the characteristics of the payee or beneficial owner that are relevant to withholding or reporting under chapter 3 of the Internal Revenue Code and the regulations thereunder. For purposes of this paragraph (b)(2)(vii), documentation also includes the agreement that the withholding agent has in effect with an authorized foreign agent in accordance with § 1.1441–7(c)(2)(i). A withholding agent that is not required to obtain documentation with respect to a payment is considered to lack documentation for purposes of this paragraph (b)(2)(vii). For example, a withholding agent paying U.S. source interest to a person that is an exempt recipient, as defined in § 1.6049–4(c)(1)(ii), is not required to obtain documentation from that person in order to determine whether an amount paid to that person is reportable under an applicable information reporting provision under chapter 61 of the Internal Revenue Code. The withholding agent must, however, treat the payment as made to an undocumented person for purposes of chapter 3 of the Internal Revenue Code. Therefore, the presumption rules of paragraph (b)(3)(iii) of this section apply to determine whether the person is presumed to be a U.S. person (in which case, no withholding is required under this section), or whether the person is presumed to be a foreign person (in which case 30-percent withholding is required under this section). See paragraph (b)(3)(v) of this section for special reliance rules in the case of a payment to a foreign intermediary and § 1.1441–5(d) and (e)(6) for special reliance rules in the case of a payment to a flow-through entity.

(B) *Special rules applicable to a withholding certificate from a nonqualified intermediary or flow-through entity.* (*1*) In the case of a payment made to a nonqualified intermediary, a flow-through entity (as defined in paragraph (c)(23) of this section), and a U.S. branch described in paragraph (b)(2)(iv) of this section (other than a branch that is treated as a U.S. person), a withholding agent can reliably associate the payment with valid documentation only to the extent that, prior to the payment, the withholding agent can allocate the

payment to a valid nonqualified intermediary, flow-through, or U.S. branch withholding certificate; the withholding agent can reliably determine how much of the payment relates to valid documentation provided by a payee as determined under paragraph (c)(12) of this section (i.e., a person that is not itself an intermediary, flow-through entity, or U.S. branch); and the withholding agent has sufficient information to report the payment on Form 1042–S or Form 1099, if reporting is required. See paragraph (e)(3)(iii) of this section for the requirements of a nonqualified intermediary withholding certificate, paragraph (e)(3)(v) of this section for the requirements of a U.S. branch certificate, and §§ 1.1441–5(c)(3)(iii) and (e)(5)(iii) for the requirements of a flow-through withholding certificate. Thus, a payment cannot be reliably associated with valid documentation provided by a payee to the extent such documentation is lacking or unreliable, or to the extent that information required to allocate and report all or a portion of the payment to each payee is lacking or unreliable. If a withholding certificate attached to an intermediary, U.S. branch, or flow-through withholding certificate is another intermediary, U.S. branch, or flow-through withholding certificate, the rules of this paragraph (b)(2)(vii)(B) apply by treating the share of the payment allocable to the other intermediary, U.S. branch, or flow-through entity as if the payment were made directly to such other entity. See paragraph (e)(3)(iv)(D) of this section for rules permitting information allocating a payment to documentation to be received after the payment is made.

(*2*) The rules of paragraph (b)(2)(vii)(B)(*1*) of this section are illustrated by the following examples:

Example 1. WH, a withholding agent, makes a payment of U.S. source interest to NQI, an intermediary that is a nonqualified intermediary. NQI provides a valid intermediary withholding certificate under paragraph (e)(3)(iii) of this section. NQI does not, however, provide valid documentation from the persons on whose behalf it receives the interest payment, and, therefore, the interest payment cannot be reliably associated with valid documentation provided by a payee. WH must apply the presumption rules of paragraph (b)(3)(v) of this section to the payment.

Example 2. The facts are the same as in *Example 1*, except that NQI does attach valid beneficial owner withholding certificates (as defined in paragraph (e)(2)(i) of this section) from A, B, C, and D establishing their status as foreign persons. NQI does not, however, provide WH with any information allocating the payment among A, B, C, and D and, therefore, WH cannot determine the portion of the payment that relates to each beneficial owner withholding certificate. The interest payment cannot be reliably associated with valid documentation from a payee and WH must apply the presumption rules of paragraph (b)(3)(v) of this section to the payment. See, however, paragraph (e)(3)(iv)(D) of this section providing special rules permitting allocation information to be received after a payment is made.

Example 3. The facts are the same as in Example 2, except that NQI does provide allocation information associated with its intermediary withholding certificate indicating that 25 percent of the interest payment is allocable to A and 25 percent to B. NQI does not provide any allocation information regarding the remaining 50 percent of the payment. WH may treat 25 percent of the payment as made to A and 25 percent as made to B. The remaining 50 percent of the payment cannot be reliably associated with valid documentation from a payee, however, since NQI did not provide information allocating the payment. Thus, the remaining 50 percent of the payment is subject to the presumption rules of paragraph (b)(3)(v) of this section.

Example 4. WH makes a payment of U.S. source interest to NQI1, an intermediary that is not a qualified intermediary. NQI1 provides WH with a valid nonqualified intermediary withholding certificate as well a valid beneficial owner withholding certificates from A and B and a valid nonqualified intermediary withholding certificate from NQI2. NQI2 has provided valid beneficial owner documentation from C sufficient to establish C's status as a foreign person. Based on information provided by NQI1, WH can allocate 20 percent of the interest payment to A, and 20 percent to B. Based on information that NQI2 provided NQI1 and that NQI1 provides to WH, WH can allocate 60 percent of the payment to NQI 2, but can only allocate one half of that payment (30 percent) to C. Therefore, WH cannot reliably associate 30 percent of the payment made to NQI2 with valid documentation and must apply the presumption rules of paragraph (b)(3)(v) of this section to that portion of the payment.

(C) *Special rules applicable to a withholding certificate provided by a qualified intermediary that does not assume primary withholding responsibility.* (*1*) If a payment is made to a qualified intermediary that does not assume primary withholding responsibility under chapter 3 of the Internal Revenue Code or primary Form 1099 reporting and backup withholding responsibility under chapter 61 and section 3406 of the Internal Revenue Code for the payment, a withholding agent can reliably associate the payment with valid documentation only to the extent that, prior to the payment, the withholding agent has received a valid qualified intermediary withholding certificate and the withholding agent can reliably determine the portion of the payment that relates to a withholding rate pool, as defined in paragraph (e)(5)(v)(C) of this section. In the case of a withholding rate pool attributable to a U.S. non-exempt recipient, a payment cannot be reliably associated with valid documentation unless, prior to the payment, the qualified intermediary has provided the U.S. person's Form W–9 (or, in the absence of the form, the name, address, and TIN, if available, of the U.S. person) and sufficient information for the withholding agent to report the payment on Form 1099. See paragraph (e)(5)(v)(C)(*2*) of this section for special rules regarding allocation of payments among U.S. non-exempt recipients.

(*2*) The rules of this paragraph (b)(2)(vii)(C) are illustrated by the following examples:

Example 1. WH, a withholding agent, makes a payment of U.S. source dividends to QI. QI provides WH with a valid qualified intermediary withholding certificate on which it indicates that it does not assume primary withholding responsibility under chapter 3 of the Internal Revenue Code or primary Form 1099 reporting and backup withholding responsibility under chapter 61 and section 3406 of the Internal Revenue Code. QI does not provide any information allocating the dividend to withholding rate pools. WH cannot reliably associate the payment with valid payee documentation and therefore must apply the presumption rules of paragraph (b)(3)(v) of this section.

Example 2. WH makes a payment of U.S. source dividends to QI. QI has 5 customers: A, B, C, D, and E. QI has obtained documentation from A and B establishing their entitlement to a 15 percent rate of tax on U.S. source dividends under an income tax treaty. C is a U.S. person that is an exempt recipient as defined in paragraph (c)(20) of this section. D and E are U.S. non-exempt recipients who have provided Forms W–9 to QI. A, B, C, D, and E are each entitled to 20 percent of the dividend payment. QI provides WH with a valid qualified intermediary withholding certificate as described in paragraph (e)(2)(ii) of this section with which it associates the Forms W–9 from D and E. QI associates the following allocation information with its qualified intermediary withholding certificate: 40 percent of the payment is allocable to the 15 percent withholding rate pool, and 20 percent is allocable to each of D and E. QI does not provide any allocation information regarding the remaining 20 percent of the payment. WH cannot reliably associate 20 percent of the payment with valid documentation and, therefore, must apply the presumption rules of paragraph (b)(3)(v) of this section to that portion of the payment. The 20 percent of the payment allocable to the 15 percent withholding rate pool, and the portion of the payments allocable to D and E are payments that can be reliably associated with documentation.

(D) *Special rules applicable to a withholding certificate provided by a qualified intermediary that assumes primary withholding responsibility under chapter 3 of the Internal Revenue*

Code. (*1*) In the case of a payment made to a qualified intermediary that assumes primary withholding responsibility under chapter 3 of the Internal Revenue Code with respect to that payment (but does not assume primary Form 1099 reporting and backup withholding responsibility under chapter 61 and section 3406 of the Internal Revenue Code), a withholding agent can reliably associate the payment with valid documentation only to the extent that, prior to the payment, the withholding agent has received a valid qualified intermediary withholding certificate and the withholding agent can reliably determine the portion of the payment that relates to the withholding rate pool for which the qualified intermediary assumes primary withholding responsibility under chapter 3 of the Internal Revenue Code and the portion of the payment attributable to withholding rate pools for each U.S. non-exempt recipient for whom the qualified intermediary has provided a Form W–9 (or, in absence of the form, the name, address, and TIN, if available, of the U.S. non-exempt recipient). See paragraph (e)(5)(v)(C)(*2*) of this section for alternative allocation procedures for payments made to U.S. persons that are not exempt recipients.

(*2*) *Examples.* The following examples illustrate the rules of paragraph (b)(2)(vii)(D)(*1*) of this section:

Example 1. WH makes a payment of U.S. source interest to QI, a qualified intermediary. QI provides WH with a withholding certificate that indicates that QI will assume primary withholding responsibility under chapter 3 of the Internal Revenue Code with respect to the payment. In addition, QI attaches a Form W–9 from A, a U.S. non-exempt recipient, as defined in paragraph (c)(21) of this section, and provides the name, address, and TIN of B, a U.S. person that is also a non-exempt recipient but who has not provided a Form W–9. QI associates a withholding statement with its qualified intermediary withholding certificate indicating that 10 percent of the payment is attributable to A, and 10 percent to B, and that QI will assume primary withholding responsibility with respect to the remaining 80 percent of the payment. WH can reliably associate the entire payment with valid documentation. Although under the presumption rule of paragraph (b)(3)(v) of this section, an undocumented person receiving U.S. source interest is generally presumed to be a foreign person, WH has actual knowledge that B is a U.S. non-exempt recipient and therefore must report the payment on Form 1099 and backup withhold on the interest payment under section 3406.

Example 2. The facts are the same as in *Example 1*, except that no Forms W–9 or other information have been provided for the 20 percent of the payment that is allocable to A and B. Thus, QI has accepted withholding responsibility for 80 percent of the payment, but has provided no information for the remaining 20 percent. In this case, 20 percent of the payment cannot be reliably associated with valid documentation, and WH must apply the presumption rule of paragraph (b)(3)(v) of this section.

(E) *Special rules applicable to a withholding certificate provided by a qualified intermediary that assumes primary Form 1099 reporting and backup withholding responsibility but not primary withholding under chapter 3.* (*1*) If a payment is made to a qualified intermediary that assumes primary Form 1099 reporting and backup withholding responsibility for the payment (but does not assume primary withholding responsibility under chapter 3 of the Internal Revenue Code), a withholding agent can reliably associate the payment with valid documentation only to the extent that, prior to the payment, the withholding agent has received a valid qualified intermediary withholding certificate and the withholding agent can reliably determine the portion of the payment that relates to a withholding rate pool or pools provided as part of the qualified intermediary's withholding statement and the portion of the payment for which the qualified intermediary assumes primary Form 1099 reporting and backup withholding responsibility.

(*2*) The following example illustrates the rules of paragraph (b)(2)((vii)(D)(*1*) of this section:

Example. WH makes a payment of U.S. source dividends to QI, a qualified intermediary. QI has provided WH with a valid qualified intermediary withholding certificate. QI states on its withholding statement accompanying the certificate that it assumes primary Form 1099 reporting and backup withholding responsibility but does not assume primary withholding responsibility under chapter 3 of the Internal Revenue Code. QI represents that 15 percent of the dividend is subject to a 30 percent rate of withholding, 75 percent of the dividend is subject to a 15 percent rate of withholding, and that QI assumed primary Form 1099 reporting and backup withholding for the remaining 10 percent of the payment. The entire payment can be reliably associated with valid documentation.

(F) *Special rules applicable to a withholding certificate provided by a qualified intermediary that assumes primary withholding responsibility under chapter 3 and primary Form 1099 reporting and backup withholding responsibility and a withholding certificate provided by a withholding foreign partnership.* If a payment is made to a qualified intermediary that assumes both primary withholding responsibility under chapter 3 of the Internal Revenue Code and primary Form 1099 reporting and backup withholding responsibility under chapter 61 and section 3406 of the Internal Revenue Code for the payment, a withholding agent can reliably associate a payment with valid documentation provided that it receives a valid qualified intermediary withholding certificate as described in paragraph (e)(3)(ii) of this section. In the case of a payment made to a withholding foreign partnership, the withholding agent can reliably associate the payment with valid documentation to the extent it can associate the payment with a valid withholding certificate described in § 1.1441–5(c)(2)(iv).

(3) *Presumptions regarding payee's status in the absence of documentation*—(i) *General rules.* A withholding agent that cannot, prior to the payment, reliably associate (within the meaning of paragraph (b)(2)(vii) of this section) a payment of an amount subject to withholding (as described in § 1.1441–2(a)) with valid documentation may rely on the presumptions of this paragraph (b)(3) to determine the status of the payee as a U.S. or a foreign person and the payee's other relevant characteristics (e.g., as an owner or intermediary, as an individual, trust, partnership, or corporation). * * *

(ii) *Presumptions of classification as individual, corporation, partnership, etc.* (A) *In general.* A withholding agent that cannot reliably associate a payment with a valid withholding certificate or that has received valid documentary evidence under §§ 1.1441–1(e)(1)(ii)(*2*) and 1.6049–5(c)(1) or (4) but cannot determine a payee's classification from the documentary evidence must apply the rules of this paragraph (b)(3)(ii) to determine the payee's classification as an individual, trust, estate, corporation, or partnership. The fact that a payee is presumed to have a certain status under the provisions of this paragraph (b)(3)(ii) does not mean that it is excused from furnishing documentation if documentation is otherwise required to obtain a reduced rate of withholding under this section. For example, if, for purposes of this paragraph (b)(3)(ii), a payee is presumed to be a tax-exempt organization based on § 1.6049–4(c)(1)(ii)(B), the withholding agent cannot rely on this presumption to reduce the rate of withholding on payments to such person (if such person is also presumed to be a foreign person under paragraph (b)(3)(iii)(A) of this section) because a reduction in the rate of withholding for payments to a foreign tax-exempt organization generally requires that a valid Form W–8

described in § 1.1441–9(b)(2) be furnished to the withholding agent.

(B) *No documentation provided.* If the withholding agent cannot reliably associate a payment with a valid withholding certificate or valid documentary evidence, it must presume that the payee is an individual, a trust, or an estate, if the payee appears to be such person (e.g., based on the payee's name or other indications). In the absence of reliable indications that the payee is an individual, trust, or an estate, the withholding agent must presume that the payee is a corporation or one of the persons enumerated under § 1.6049–4(c)(1)(ii)(B) through (Q) if it can be so treated under § 1.6049–4(c)(1)(ii)(A)(*1*) or any one of the paragraphs under § 1.6049–4(c)(1)(ii)(B) through (Q) without the need to furnish documentation. If the withholding agent cannot treat a payee as a person described in § 1.6049–4(c)(1)(ii)(A)(*1*) through (Q), then the payee shall be presumed to be a partnership. If such a partnership is presumed to be foreign, it is not the beneficial owner of the income paid to it. See paragraph (c)(6) of this section. If such a partnership is presumed to be domestic, it is a U.S. non-exempt recipient for purposes of chapter 61 of the Internal Revenue Code.

(C) *Documentary evidence furnished for offshore account.* If the withholding agent receives valid documentary evidence, as described in § 1.6049–5(c)(1) or (4), with respect to an offshore account from an entity but the documentary evidence does not establish the entity's classification as a corporation, trust, estate, or partnership, the withholding agent may presume (in the absence of actual knowledge otherwise) that the entity is the type of person enumerated under § 1.6049–4(c)(1)(ii)(B) through (Q) if it can be so treated under any one of those paragraphs without the need to furnish documentation. If the withholding agent cannot treat a payee as a person described in § 1.6049–4(c)(1)(ii)(B) through (Q), then the payee shall be presumed to be a corporation unless the withholding agent knows, or has reason to know, that the entity is not classified as a corporation for U.S. tax purposes, the withholding agent is required to presume the payee is a U.S. person under paragraph (b)(3)(iii) of this section, or there are indicia of U.S. status. If the withholding agent must presume the payee is a U.S. person, or there are indicia of U.S. status, the withholding agent shall treat the entity as a partnership, and therefore as a U.S. non-exempt recipient for purposes of chapter 61 of the Internal Revenue Code; however backup withholding under section 3406 shall not apply if backup withholding is not required under § 31.3406(g)–1(e) of this chapter. Indicia of U.S. status exists if payments are regularly made to a payee in the United States, the payee has an account with the same withholding agent in the United States, or the payee has a U.S. address. If a payee is, or is presumed to be, a corporation under this paragraph (b)(3)(ii)(C) and a foreign person under paragraph (b)(3)(iii) of this section, a withholding agent shall not treat the payee as the beneficial owner of income if the withholding agent knows, or has reason to know, that the payee is not the beneficial owner of the income. For this purpose, a withholding agent shall have reason to know that the payee is not a beneficial owner if the documentary evidence indicates that the payee is a bank, broker, intermediary, custodian, or other agent, or is treated under § 1.6049–4(c)(1)(ii)(B) through (Q) as such a person. A withholding agent may, however, treat such a person as a beneficial owner if the foreign person provides a statement, in writing and signed by a person with authority to sign the statement, that is attached to the documentary evidence stating it is the beneficial owner of the income.

(iii) * * *

(C) *Pensions, annuities, etc.* A payment from a trust described in section 401(a), an annuity plan described in section 403(a), a payment with respect to any annuity, custodial account, or retirement income account described in section 403(b), or a payment from an individual retirement account or individual retirement annuity described in section 408 that a withholding agent cannot reliably associate with documentation is presumed to be made to a U.S. person only if the withholding agent has a record of a Social Security number for the payee and relies on a mailing address described in the following sentence. A mailing address is an address used for purposes of information reporting or otherwise communicating with the payee that is an address in the United States or in a foreign country with which the United States has an income tax treaty in effect and the treaty provides that the payee, if an individual resident in that country, would be entitled to an exemption from U.S. tax on amounts described in this paragraph (b)(3)(iii)(C). Any payment described in this paragraph (b)(3)(iii)(C) that is not presumed to be made to a U.S. person is presumed to be made to a foreign person. A withholding agent making a payment to a person presumed to be a foreign person may not reduce the 30-percent amount of withholding required on such payment unless it receives a withholding certificate described in paragraph (e)(2)(i) of this section furnished by the beneficial owner. For reduction in the 30-percent rate, see §§ 1.1441–4(e) or 1.1441–6(b).

(D) *Certain payments to offshore accounts.* A payment is presumed made to a foreign payee if the payment is made outside the United States (as defined in § 1.6049–5(e)) to an offshore account (as defined in § 1.6049–5(c)(1)) and the withholding agent does not have actual knowledge that the payee is a U.S. person. See § 1.6049–5(d)(2) and (3) for exceptions to this rule.

(iv) *Grace period.* A withholding agent may choose to apply the provisions of § 1.6049–5(d)(2)(ii) regarding a 90-day grace period for purposes of this paragraph (b)(3) (by applying the term *withholding agent* instead of the term *payor*) to amounts described in § 1.1441–6(c)(2) and to amounts covered by a Form 8233 described in § 1.1441–4(b)(2)(ii). Thus, for these amounts, a withholding agent may choose to treat an account holder as a foreign person and withhold under chapter 3 of the Internal Revenue Code (and the regulations thereunder) while awaiting documentation. For purposes of determining the rate of withholding under this section, the withholding agent must withhold at the unreduced 30-percent rate at the time that the amounts are credited to an account. However, a withholding agent who can reliably associate the payment with a withholding certificate that is otherwise valid within the meaning of the applicable provisions except for the fact that it is transmitted by facsimile may rely on that facsimile form for purposes of withholding at the claimed reduced rate. For reporting of amounts credited both before and after the grace period, see § 1.1461–1(c)(4)(i)(A). The following adjustments shall be made at the expiration of the grace period:

(A) If, at the end of the grace period, the documentation is not furnished in the manner required under this section and the account holder is presumed to be a U.S. non-exempt recipient, then backup withholding applies to amounts credited to the account after the expiration of the grace period only. Amounts credited to the account during the grace period shall be treated as owned by a foreign payee and adjustments must be made to correct any underwithholding on such amounts in the manner described in § 1.1461–2.

(B) If, at the end of the grace period, the documentation is not furnished in the manner required under this section, or if documentation is furnished that

does not support the claimed rate reduction, and the account holder is presumed to be a foreign person then adjustments must be made to correct any underwithholding on amounts credited to the account during the grace period, based on the adjustment procedures described in § 1.1461–2.

(v) *Special rules applicable to payments to foreign intermediaries*—(A) *Reliance on claim of status as foreign intermediary.* The presumption rules of paragraph (b)(3)(v)(B) of this section apply to a payment made to an intermediary (whether the intermediary is a qualified or nonqualified intermediary) that has provided a valid withholding certificate under paragraph (e)(3)(ii) or (iii) of this section (or has provided documentary evidence described in paragraph (b)(3)(ii)(C) of this section that indicates it is a bank, broker, custodian, intermediary, or other agent) to the extent the withholding agent cannot treat the payment as being reliably associated with valid documentation under the rules of paragraph (b)(2)(vii) of this section. For this purpose, a U.S. person's foreign branch that is a qualified intermediary defined in paragraph (e)(5)(ii) of this section shall be treated as a foreign intermediary. A payee that the withholding agent may not reliably treat as a foreign intermediary under this paragraph (b)(3)(v)(A) is presumed to be a payee other than an intermediary whose classification as an individual, corporation, partnership, etc., must be determined in accordance with paragraph (b)(3)(ii) of this section to the extent relevant. In addition, such payee is presumed to be a U.S. or a foreign payee based upon the presumptions described in paragraph (b)(3)(iii) of this section. The provisions of paragraph (b)(3)(v)(B) of this section are not relevant to a withholding agent that can reliably associate a payment with a withholding certificate from a person representing to be a qualified intermediary to the extent the qualified intermediary has assumed primary withholding responsibility in accordance with paragraph (e)(5)(iv) of this section.

(B) *Beneficial owner documentation or allocation information is lacking or unreliable.* Any portion of a payment that the withholding agent may treat as made to a foreign intermediary (whether a nonqualified or a qualified intermediary) but that the withholding agent cannot treat as reliably associated with valid documentation under the rules of paragraph (b)(2)(vii) of this section is presumed made to an unknown, undocumented foreign payee. As a result, a withholding agent must deduct and withhold 30 percent from any payment of an amount subject to withholding. If a withholding certificate attached to an intermediary certificate is another intermediary withholding certificate or a flow-through withholding certificate, the rules of this paragraph (b)(3)(v)(B) (or § 1.1441–5(d)(3) or (e)(6)(iii)) apply by treating the share of the payment allocable to the other intermediary or flow-through entity as if it were made directly to the other intermediary or flow-through entity. Any payment of an amount subject to withholding that is presumed made to an undocumented foreign person must be reported on Form 1042–S. See § 1.1461–1(c). See § 1.6049–5(d) for payments that are not subject to withholding.

(vi) *U.S. branches.* The rules of paragraph (b)(3)(v)(B) of this section shall apply to payments to a U.S. branch described in paragraph (b)(2)(iv)(A) of this section that has not agreed to be treated as a U.S. person.

(vii) *Joint payees*—(A) *In general.* Except as provided in paragraph (b)(3)(vii)(B) of this section, if a withholding agent makes a payment to joint payees and cannot reliably associate a payment with valid documentation from all payees, the payment is presumed made to an unidentified U.S. person. However, if one of the joint payees provides a Form W–9 furnished in accordance with the procedures described in §§ 31.3406(d)–1 through 31.3406(d)–5 of this chapter, the payment shall be treated as made to that payee. See § 31.3406(h)–2 of this chapter for rules to determine the relevant payee if more than one Form W–9 is provided. For purposes of applying this paragraph (b)(3), the grace period rules in paragraph (b)(3)(iv) of this section shall apply only if each payee meets the conditions described in paragraph (b)(3)(iv) of this section.

(B) *Special rule for offshore accounts.* If a withholding agent makes a payment to joint payees and cannot reliably associate a payment with valid documentation from all payees, the payment is presumed made to an unknown foreign payee if the payment is made outside the United States (as defined in § 1.6059–5(e)) to an offshore account (as defined in § 1.6049–5(c)(1)).

* * * * *

(6) *Rules of withholding for payments by a foreign intermediary or certain U.S. branches*—(i) *In general.* A foreign intermediary described in paragraph (e)(3)(i) of this section or a U.S. branch described in paragraph (b)(2)(iv) of this section that receives an amount subject to withholding (as defined in § 1.1441–2(a)) shall be required to withhold (if another withholding agent has not withheld the full amount required) and report such payment under chapter 3 of the Internal Revenue Code and the regulations thereunder except as otherwise provided in this paragraph (b)(6). A nonqualified intermediary or U.S. branch described in paragraph (b)(2)(iv) of this section (other than a branch that is treated as a U.S. person) shall not be required to withhold or report if it has provided a valid nonqualified intermediary withholding certificate or a U.S. branch withholding certificate, it has provided all of the information required by paragraph (e)(3)(iv) of this section (withholding statement), and it does not know, and has no reason to know, that another withholding agent failed to withhold the correct amount or failed to report the payment correctly under § 1.1461–1(c). A qualified intermediary's obligations to withhold and report shall be determined in accordance with its qualified intermediary withholding agreement.

(ii) *Examples.* The following examples illustrate the rules of paragraph (b)(6)(i) of this section:

Example 1. FB, a foreign bank, acts as intermediary for five different persons, A, B, C, D, and E, each of whom owns U.S. securities that generate U.S. source dividends. The dividends are paid by USWA, a U.S. withholding agent. FB furnished USWA with a nonqualified intermediary withholding certificate, described in paragraph (e)(3)(iii) of this section, to which it attached the withholding certificates of each of A, B, C, D, and E. The withholding certificates from A and B claim a 15 percent reduced rate of withholding under an income tax treaty. C, D, and E claim no reduced rate of withholding. FB provides a withholding statement that meets all of the requirements of paragraph (e)(3)(iv) of this section, including information allocating 20 percent of each dividend payment to each of A, B, C, D, and E. FB does not have actual knowledge or reason to know that USWA did not withhold the correct amounts or report the dividends on Forms 1042–S to each of A, B, C, D, and E. FB is not required to withhold or to report the dividends to A, B, C, D, and E.

Example 2. The facts are the same as in *Example 1,* except that FB did not provide any information for USWA to determine how much of the dividend payments were made to A, B, C, D, and E. Because USWA could not reliably associate the dividend payments with documentation under paragraph (b)(2)(vii) of this section, USWA applied the presumption rules of paragraph (b)(3)(v) of this section and withheld 30 percent from all dividend payments. In addition, USWA filed a single Form 1042–S reporting the payment to an unknown foreign payee. FB is deemed to know that USWA did not report the payment to A, B, C, D, and E because it did not provide all of the information required on

a withholding statement under paragraph (e)(3)(iv) of this section (*i.e.*, allocation information). Although FB is not required to withhold on the payment because the full 30 percent withholding was imposed by USWA, it is required to report the payments on Forms 1042–S to A, B, C, D, and E. FB's intentional failure to do so will subject it to intentional disregard penalties under sections 6721 and 6722.

* * * * *

(c) * * *

(2) *Foreign and U.S. person.* The term *foreign person* means a nonresident alien individual, a foreign corporation, a foreign partnership, a foreign trust, a foreign estate, and any other person that is not a U.S. person described in the next sentence. Solely for purposes of the regulations under chapter 3 of the Internal Revenue Code, the term *foreign person* also means, with respect to a payment by a withholding agent, a foreign branch of a U.S. person that furnishes an intermediary withholding certificate described in paragraph (e)(3)(ii) of this section. Such a branch continues to be a U.S. payor for purposes of chapter 61 of the Internal Revenue Code. See § 1.6049–5(c)(4). A U.S. person is a person described in section 7701(a)(30), the U.S. government (including an agency or instrumentality thereof), a State (including an agency or instrumentality thereof), or the District of Columbia (including an agency or instrumentality thereof).

* * * * *

(6) *Beneficial owner*—(i) *General rule.* This paragraph (c)(6) defines the term *beneficial owner* for payments of income other than a payment for which a reduced rate of withholding is claimed under an income tax treaty. The term *beneficial owner* means the person who is the owner of the income for tax purposes and who beneficially owns that income. A person shall be treated as the owner of the income to the extent that it is required under U.S. tax principles to include the amount paid in gross income under section 61 (determined without regard to an exclusion or exemption from gross income under the Internal Revenue Code). Beneficial ownership of income is determined under the provisions of section 7701(l) and the regulations under that section and any other applicable general U.S. tax principles, including principles governing the determination of whether a transaction is a conduit transaction. Thus, a person receiving income in a capacity as a nominee, agent, or custodian for another person is not the beneficial owner of the income. In the case of a scholarship, the student receiving the scholarship is the beneficial owner of that scholarship. In the case of a payment of an amount that is not income, the beneficial owner determination shall be made under this paragraph (c)(6) as if the amount were income.

(ii) *Special rules*—(A) *General rule.* The beneficial owners of income paid to an entity described in this paragraph (c)(6)(ii) are those persons described in paragraphs (c)(6)(ii)(B) through (D) of this section.

(B) *Foreign partnerships.* The beneficial owners of income paid to a foreign partnership (whether a nonwithholding or a withholding foreign partnership) are the partners in the partnership, unless they themselves are not the beneficial owners of the income under this paragraph (c)(6). For example, a partnership (first tier) that is a partner in another partnership (second tier) is not the beneficial owner of income paid to the second tier partnership since the first tier partnership is not the owner of the income under U.S. tax principles. Rather, the partners of the first tier partnership are the beneficial owners (to the extent they are not themselves persons that are not beneficial owners under this paragraph (c)(6)). See § 1.1441–5(b) for applicable withholding procedures for payments to a domestic partnership. See also § 1.1441–5(c)(3)(ii) for applicable withholding procedures for payments to a foreign partnership where one of the partners (at any level in the chain of tiers) is a domestic partnership.

(C) *Foreign simple trusts and foreign grantor trusts.* The beneficial owners of income paid to a foreign simple trust, as described in paragraph (c)(23) of this section, are the beneficiaries of the trust, unless they themselves are not the beneficial owners of the income under this paragraph (c)(6). The beneficial owners of income paid to a foreign grantor trust, as described in paragraph (c)(26) of this section, are the persons treated as the owners of the trust, unless they themselves are not the beneficial owners of the income under this paragraph (c)(6).

(D) *Other foreign trusts and foreign estates.* The beneficial owner of income paid to a foreign complex trust as defined in paragraph (c)(25) of this section or to a foreign estate is the foreign complex trust or estate itself.

* * * * *

(12) *Payee.* For purposes of chapter 3 of the Internal Revenue Code, the term *payee* of a payment is determined under paragraph (b)(2) of this section, § 1.1441–5(c)(1) (relating to partnerships), and § 1.1441–5(e)(2) and (3) (relating to trusts and estates) and includes foreign persons, U.S. exempt recipients, and U.S. non-exempt recipients. A nonqualified intermediary and a qualified intermediary (to the extent it does not assume primary withholding responsibility) are not payees if they are acting as intermediaries and not the beneficial owner of income. In addition, a flow-through entity is not a payee unless the income is (or is deemed to be) effectively connected with the conduct of a trade or business in the United States. See § 1.6049–5(d)(1) for rules to determine the payee for purposes of chapter 61 of the Internal Revenue Code. See §§ 1.1441–1(b)(3), 1.1441–5(d), and (e)(6) and 1.6049–5(d)(3) for presumption rules that apply if a payee's identity cannot be determined on the basis of valid documentation.

(13) *Intermediary.* An *intermediary* means, with respect to a payment that it receives, a person that, for that payment, acts as a custodian, broker, nominee, or otherwise as an agent for another person, regardless of whether such other person is the beneficial owner of the amount paid, a flow-through entity, or another intermediary.

(14) *Nonqualified intermediary.* A *nonqualified intermediary* means any intermediary that is not a qualified intermediary, as defined in paragraph (e)(5)(ii) of this section, or a qualified intermediary that is not acting in its capacity as a qualified intermediary with respect to a payment. For example, to the extent an entity that is a qualified intermediary provides another withholding agent with a foreign beneficial owner withholding certificate as defined in paragraph (e)(2)(i) of this section, the entity is not acting in its capacity as a qualified intermediary. Notwithstanding the preceding sentence, a qualified intermediary is acting as a qualified intermediary to the extent it provides another withholding agent with Forms W–9, or other information regarding U.S. non-exempt recipients pursuant to its qualified intermediary agreement with the IRS.

(15) *Qualified intermediary.* The term *qualified intermediary* is defined in paragraph (e)(5)(ii) of this section.

(16) *Withholding certificate.* The term *withholding certificate* means a Form W–8 described in paragraph (e)(2)(i) of this section (relating to foreign beneficial owners), paragraph (e)(3)(i) of this section (relating to foreign intermediaries), § 1.1441–5(c)(2)(iv), (c)(3)(iii), and (e)(3)(iv) (relating to flow-through entities), a Form 8233 described in § 1.1441–4(b)(2), a Form W–9 as described in paragraph (d) of this section, a statement described in § 1.871–14(c)(2)(v) (relating to portfolio

interest), or any other certificates that under the Internal Revenue Code or regulations certifies or establishes the status of a payee or beneficial owner as a U.S. or a foreign person.

(17) *Documentary evidence; other appropriate documentation*. The terms *documentary evidence* or *other appropriate documentation* refer to documents other than a withholding certificate that may be provided for payments made outside the United States to offshore accounts or any other evidence that under the Internal Revenue Code or regulations certifies or establishes the status of a payee or beneficial owner as a U.S. or foreign person. See §§ 1.1441–6(b)(2), (c)(3) and (4) (relating to treaty benefits), and 1.6049–5(c)(1) and (4) (relating to chapter 61 reporting). Also see § 1.1441–4(a)(3)(ii) regarding documentary evidence for notional principal contracts.

(18) *Documentation*. The term *documentation* refers to both withholding certificates, as defined in paragraph (c)(16) of this section, and documentary evidence or other appropriate documentation, as defined in paragraph (c)(17) of this section.

(19) *Payor*. The term *payor* is defined in § 31.3406(a)–2 of this chapter and § 1.6049–4(a)(2) and generally includes a withholding agent, as defined in § 1.1441–7(a). The term also includes any person that makes a payment to an intermediary, flow-through entity, or U.S. branch that is not treated as a U.S. person to the extent the intermediary, flow-through, or U.S. branch provides a Form W–9 or other appropriate information relating to a payee so that the payment can be reported under chapter 61 of the Internal Revenue Code and, if required, subject to backup withholding under section 3406. This latter rule does not preclude the intermediary, flow-through entity, or U.S. branch from also being a payor.

(20) *Exempt recipient*. The term *exempt recipient* means a person that is exempt from reporting under chapter 61 of the Internal Revenue Code and backup withholding under section 3406 and that is described in §§ 1.6041–3(q), 1.6045–2(b)(2)(i), and 1.6049–4(c)(1)(ii), and § 5f.6045–1(c)(3)(i)(B) of this chapter. Exempt recipients are not exempt from withholding under chapter 3 of the Internal Revenue Code unless they are U.S. persons or foreign persons entitled to an exemption from withholding under chapter 3.

(21) *Non-exempt recipient*. A *non-exempt recipient* is any person that is not an exempt recipient under paragraph (c)(20) of this section.

(22) *Reportable amounts*. *Reportable amounts* are defined in paragraph (e)(3)(vi) of this section.

(23) *Flow-through entity*. A *flow-through entity* means any entity that is described in this paragraph (c)(23) and that may provide documentation on behalf of others to a withholding agent. The entities described in this paragraph are a foreign partnership (other than a withholding foreign partnership), a foreign simple trust (other than a withholding foreign trust) that is described in paragraph (c)(24) of this section, a foreign grantor trust (other than a withholding foreign trust) that is described in paragraph (c)(25) of this section, or, for any payments for which a reduced rate of withholding under an income tax treaty is claimed, any entity to the extent the entity is considered to be fiscally transparent under section 894 with respect to the payment by an interest holder's jurisdiction.

(24) *Foreign simple trust*. A *foreign simple trust* is a foreign trust that is described in section 651(a).

(25) *Foreign complex trust*. A *foreign complex trust* is a foreign trust other than a trust described in section 651(a) or sections 671 through 679.

(26) *Foreign grantor trust*. A *foreign grantor trust* is a foreign trust but only to the extent all or a portion of the income of the trust is treated as owned by the grantor or another person under sections 671 through 679.

(27) *Partnership*. The term *partnership* means any entity treated as a partnership under § 301.7701–2 or –3 of this chapter.

(28) *Nonwithholding foreign partnership*. A *nonwithholding foreign partnership* is a foreign partnership that is not a withholding foreign partnership, as defined in § 1.1441–5(c)(2)(i).

(29) *Withholding foreign partnership*. A withholding foreign partnership is defined in § 1.1441–5(c)(2)(i).

(d) * * *

(2) *Payments for which a Form W–9 is otherwise required*. A withholding agent may treat as a U.S. payee any person who is required to furnish a Form W–9 and who furnishes it in accordance with the procedures described in §§ 31.3406(d)–1 through 31.3406(d)–5 of this chapter (including the requirement that the payee furnish its taxpayer identifying number (TIN)) if the withholding agent meets all the requirements described in § 31.3406(h)–3(e) of this chapter regarding reliance by a payor on a Form W–9. Providing a Form W–9 or valid substitute form shall serve as a statement that the person whose name is on the form is a U.S. person. Therefore, a foreign person, including a U.S. branch treated as a U.S. person under paragraph (b)(2)(iv) of this section, shall not provide a Form W–9. A U.S. branch of a foreign person may establish its status as a foreign person exempt from reporting under chapter 61 and backup withholding under section 3406 by providing a withholding certificate on Form W–8.

(3) *Payments for which a Form W–9 is not otherwise required*. In the case of a payee who is not required to furnish a Form W–9 under section 3406 (e.g., a person exempt from reporting under chapter 61 of the Internal Revenue Code), the withholding agent may treat the payee as a U.S. payee if the payee provides the withholding agent with a Form W–9 or a substitute form described in § 31.3406(h)–3(c)(2) of this chapter (relating to forms for exempt recipients) that contains the payee's name, address, and TIN. The form must be signed under penalties of perjury by the payee if so required by the form or by § 31.3406(h)–3 of this chapter. Providing a Form W–9 or valid substitute form shall serve as a statement that the person whose name is on the certificate is a U.S. person. A Form W–9 or valid substitute form shall not be provided by a foreign person, including any U.S. branch of a foreign person whether or not the branch is treated as a U.S. person under paragraph (b)(2)(iv) of this section. See paragraph (e)(3)(v) of this section for withholding certificates provided by U.S. branches described in paragraph (b)(2)(iv) of this section. The procedures described in § 31.3406(h)–2(a) of this chapter shall apply to payments to joint payees. A withholding agent that receives a Form W–9 to satisfy this paragraph (d)(3) must retain the form in accordance with the provisions of § 31.3406(h)–3(g) of this chapter, if applicable, or of paragraph (e)(4)(iii) of this section (relating to the retention of withholding certificates) if § 31.3406(h)–3(g) of this chapter does not apply. The rules of this paragraph (d)(3) are only intended to provide a method by which a withholding agent may determine that a payee is a U.S. person and do not otherwise impose a requirement that documentation be furnished by a person who is otherwise treated as an exempt recipient for purposes of the applicable information reporting provisions under chapter 61 of the Internal Revenue Code (*e.g.,* § 1.6049–4(c)(1)(ii) for payments of interest).

(4) *When a payment to an intermediary or flow-through entity may be treated as made to a U.S. payee*. A withholding agent that makes a payment to an intermediary (whether a qualified intermediary or nonqualified intermediary), a flow-through entity, or

a U.S. branch described in paragraph (b)(2)(iv) of this section may treat the payment as made to a U.S. payee to the extent that, prior to the payment, the withholding agent can reliably associate the payment with a Form W–9 described in paragraph (d)(2) or (3) of this section attached to a valid intermediary, flow-through, or U.S. branch withholding certificate described in paragraph (e)(3)(i) of this section or to the extent the withholding agent can reliably associate the payment with a Form W–8 described in paragraph (e)(3)(v) of this section that evidences an agreement to treat a U.S. branch described in paragraph (b)(2)(iv) of this section as a U.S. person. In addition, a withholding agent may treat the payment as made to a U.S. payee only if it complies with the electronic confirmation procedures described in paragraph (e)(4)(v) of this section, if required, and it has not been notified by the IRS that any of the information on the withholding certificate or other documentation is incorrect or unreliable. In the case of a Form W–9 that is required to be furnished for a reportable payment that may be subject to backup withholding, the withholding agent may be notified in accordance with section 3406(a)(1)(B) and the regulations under that section. See applicable procedures under section 3406(a)(1)(B) and the regulations under that section for payors who have been notified with regard to such a Form W–9. Withholding agents who have been notified in relation to other Forms W–9, including under section 6724(b) pursuant to section 6721, may rely on the withholding certificate or other documentation only to the extent provided under procedures as prescribed by the IRS (see § 601.601(d)(2) of this chapter).

(e) * * * (1) * * *

(ii) * * * (A) * * *

(*1*) That the withholding agent can reliably associate the payment with a beneficial owner withholding certificate described in paragraph (e)(2) of this section furnished by the person whose name is on the certificate or attached to a valid foreign intermediary, flow-through, or U.S. branch withholding certificate;

* * * * *

(*3*) That the withholding agent can reliably associate the payment with a valid qualified intermediary withholding certificate, as described in paragraph (e)(3)(ii) of this section, and the qualified intermediary has provided sufficient information for the withholding agent to allocate the payment to a withholding rate pool other than a withholding rate pool or pools established for U.S. non-exempt recipients;

(*4*) That the withholding agent can reliably associate the payment with a withholding certificate described in § 1.1441–5(c)(3)(iii) or (e)(5)(iii) from a flow-through entity claiming the income is effectively connected income;

* * * * *

(3) *Intermediary, flow-through, or U.S. branch withholding certificate*—(i) *In general.* An intermediary withholding certificate is a Form W–8 by which a payee represents that it is a foreign person and that it is an intermediary (whether a qualified or nonqualified intermediary) with respect to a payment and not the beneficial owner. See paragraphs (e)(3)(ii) and (iii) of this section. A flow-through withholding certificate is a Form W–8 used by a flow-through entity as defined in paragraph (c)(23) of this section. See § 1.1441–5(c)(3)(iii) (a nonwithholding foreign partnership), § 1.1441–5(e)(5)(iii) (a foreign simple trust or foreign grantor trust) or § 1.1441–6(b)(2) (foreign entity presenting claims on behalf of its interest holders for a reduced rate of withholding under an income tax treaty). A U.S. branch certificate is a Form W–8 furnished under paragraph (e)(3)(v) of this section by a U.S. branch described in paragraph (b)(2)(iv) of this section. See paragraph (e)(4)(viii) of this section for applicable reliance rules.

(ii) *Intermediary withholding certificate from a qualified intermediary.* A qualified intermediary shall provide a qualified intermediary withholding certificate for reportable amounts received by the qualified intermediary. See paragraph (e)(3)(vi) of this section for the definition of reportable amount. A qualified intermediary withholding certificate is valid only if it is furnished on a Form W–8, an acceptable substitute form, or such other form as the IRS may prescribe, it is signed under penalties of perjury by a person with authority to sign for the qualified intermediary, its validity has not expired, and it contains the following information, statement, and certifications—

(A) The name, permanent residence address (as described in paragraph (e)(2)(ii) of this section), qualified intermediary employer identification number (QI–EIN), and the country under the laws of which the intermediary is created, incorporated, or governed. A qualified intermediary that does not act in its capacity as a qualified intermediary must not use its QI–EIN. Rather the intermediary should provide a nonqualified intermediary withholding certificate, if it is acting as an intermediary, and should use the taxpayer identification number, if any, that it uses for all other purposes;

(B) A certification that, with respect to accounts it identifies on its withholding statement (as described in paragraph (e)(5)(v) of this section), the qualified intermediary is not acting for its own account but is acting as a qualified intermediary;

(C) A certification that the qualified intermediary has provided, or will provide, a withholding statement as required by paragraph (e)(5)(v) of this section; and

(D) Any other information, certifications, or statements as may be required by the form or accompanying instructions in addition to, or in lieu of, the information and certifications described in this paragraph (e)(3)(ii) or paragraph (e)(3)(v) of this section. See paragraph (e)(5)(v) of this section for the requirements of a withholding statement associated with the qualified intermediary withholding certificate.

(iii) *Intermediary withholding certificate from a nonqualified intermediary.* A nonqualified intermediary shall provide a nonqualified intermediary withholding certificate for reportable amounts received by the nonqualified intermediary. See paragraph (e)(3)(vi) of this section for the definition of reportable amount. A nonqualified intermediary withholding certificate is valid only to the extent it is furnished on a Form W–8, an acceptable substitute form, or such other form as the IRS may prescribe, it is signed under penalties of perjury by a person authorized to sign for the nonqualified intermediary, it contains the information, statements, and certifications described in this paragraph (e)(3)(iii) and paragraph (e)(3)(iv) of this section, its validity has not expired, and the withholding certificates and other appropriate documentation for all persons to whom the certificate relates are associated with the certificate. Withholding certificates and other appropriate documentation consist of beneficial owner withholding certificates described in paragraph (e)(2)(i) of this section, intermediary and flow-through withholding certificates described in paragraph (e)(3)(i) of this section, withholding foreign partnership certificates described in § 1.1441–5(c)(2)(iv), documentary evidence described in §§ 1.1441–6(c)(3) or (4) and 1.6049–5(c)(1), and any other documentation or certificates applicable under other provisions of the Internal Revenue Code or regulations that certify or establish the status of the payee or beneficial owner as a U.S. or a foreign

person. If a nonqualified intermediary is acting on behalf of another nonqualified intermediary or a flow-through entity, then the nonqualified intermediary must associate with its own withholding certificate the other nonqualified intermediary withholding certificate or the flow-through withholding certificate and separately identify all of the withholding certificates and other appropriate documentation that are associated with the withholding certificate of the other nonqualified intermediary or flow-through entity. Nothing in this paragraph (e)(3)(iii) shall require an intermediary to furnish original documentation. Copies of certificates or documentary evidence may be transmitted to the U.S. withholding agent, in which case the nonqualified intermediary must retain the original documentation for the same time period that the copy is required to be retained by the withholding agent under paragraph (e)(4)(iii) of this section and must provide it to the withholding agent upon request. For purposes of this paragraph (e)(3)(iii), a valid intermediary withholding certificate also includes a statement described in § 1.871–14(c)(2)(v) furnished for interest to qualify as portfolio interest for purposes of sections 871(h) and 881(c). The information and certifications required on a Form W–8 described in this paragraph (e)(3)(iii) are as follows—

(A) The name and permanent resident address (as described in paragraph (e)(2)(ii) of this section) of the nonqualified intermediary, and the country under the laws of which the nonqualified intermediary is created, incorporated, or governed;

(B) A certification that the nonqualified intermediary is not acting for its own account;

(C) If the nonqualified intermediary withholding certificate is used to transmit withholding certificates or other appropriate documentation for more than one person on whose behalf the nonqualified intermediary is acting, a withholding statement associated with the Form W–8 that provides all the information required by paragraph (e)(3)(iv) of this section; and

(D) Any other information, certifications, or statements as may be required by the form or accompanying instructions in addition to, or in lieu of, the information, certifications, and statements described in this paragraph (e)(3)(iii) or paragraph (e)(3)(iv) of this section.

(iv) *Withholding statement provided by nonqualified intermediary*—(A) *In general.* A nonqualified intermediary shall provide a withholding statement required by this paragraph (e)(3)(iv) to the extent the nonqualified intermediary is required to furnish, or does furnish, documentation for payees on whose behalf it receives reportable amounts (as defined in paragraph (e)(3)(vi) of this section) or to the extent it otherwise provides the documentation of such payees to a withholding agent. A nonqualified intermediary is not required to disclose information regarding persons for whom it collects reportable amounts unless it has actual knowledge that any such person is a U.S. non-exempt recipient as defined in paragraph (c)(21) of this section. Information regarding U.S. non-exempt recipients required under this paragraph (e)(3)(iv) must be provided irrespective of any requirement under foreign law that prohibits the disclosure of the identity of an account holder of a nonqualified intermediary or financial information relating to such account holder. Although a nonqualified intermediary is not required to provide documentation and other information required by this paragraph (e)(3)(iv) for persons other than U.S. non-exempt recipients, a withholding agent that does not receive documentation and such information must apply the presumption rules of paragraph (b) of this section, §§ 1.1441–5(d) and (e)(6) and 1.6049–5(d) or the withholding agent shall be liable for tax, interest, and penalties. A withholding agent must apply the presumption rules even if it is not required under chapter 61 of the Internal Revenue Code to obtain documentation to treat a payee as an exempt recipient and even though it has actual knowledge that the payee is a U.S. person. For example, if a nonqualified intermediary fails to provide a withholding agent with a Form W–9 for an account holder that is a U.S. exempt recipient, the withholding agent must presume (even if it has actual knowledge that the account holder is a U.S. exempt recipient), that the account holder is an undocumented foreign person with respect to amounts subject to withholding. See paragraph (b)(3)(v) of this section for applicable presumptions. Therefore, the withholding agent must withhold 30 percent from the payment even though if a Form W–9 had been provided, no withholding or reporting on the payment attributable to a U.S. exempt recipient would apply. Further, a nonqualified intermediary that fails to provide the documentation and the information under this paragraph (e)(3)(iv) for another withholding agent to report the payments on Forms 1042–S and Forms 1099 is not relieved of its responsibility to file information returns. See paragraph (b)(6) of this section. Therefore, unless the nonqualified intermediary itself files such returns and provides copies to the payees, it shall be liable for penalties under sections 6721 (failure to file information returns), and 6722 (failure to furnish payee statements), including the penalties under those sections for intentional failure to file information returns. In addition, failure to provide either the documentation or the information required by this paragraph (e)(3)(iv) results in a payment not being reliably associated with valid documentation. Therefore, the beneficial owners of the payment are not entitled to reduced rates of withholding and if the full amount required to be held under the presumption rules is not withheld by the withholding agent, the nonqualified intermediary must withhold the difference between the amount withheld by the withholding agent and the amount required to be withheld. Failure to withhold shall result in the nonqualified intermediary being liable for tax under section 1461, interest, and penalties, including penalties under section 6656 (failure to deposit) and section 6672 (failure to collect and pay over tax).

(B) *General requirements.* A withholding statement must be provided prior to the payment of a reportable amount and must contain the information specified in paragraph (e)(3)(iv)(C) of this section. The statement must be updated as often as required to keep the information in the withholding statement correct prior to each subsequent payment. The withholding statement forms an integral part of the withholding certificate provided under paragraph (e)(3)(iii) of this section, and the penalties of perjury statement provided on the withholding certificate shall apply to the withholding statement. The withholding statement may be provided in any manner the nonqualified intermediary and the withholding agent mutually agree, including electronically. If the withholding statement is provided electronically, there must be sufficient safeguards to ensure that the information received by the withholding agent is the information sent by the nonqualified intermediary and all occasions of user access that result in the submission or modification of the withholding statement information must be recorded. In addition, an electronic system must be capable of providing a hard copy of all withholding statements provided by the nonqualified

intermediary. A withholding agent will be liable for tax, interest, and penalties in accordance with paragraph (b)(7) of this section to the extent it does not follow the presumption rules of paragraph (b)(3) of this section or §§ 1.1441–5(d) and (e)(6), and 1.6049–5(d) for any payment of a reportable amount, or portion thereof, for which it does not have a valid withholding statement prior to making a payment.

(C) *Content of withholding statement.* The withholding statement provided by a nonqualified intermediary must contain the information required by this paragraph (e)(3)(iv)(C).

(*1*) The withholding statement must contain the name, address, TIN (if any) and the type of documentation (documentary evidence, Form W–9, or type of Form W–8) for every person from whom documentation has been received by the nonqualified intermediary to the withholding agent and whether that person is a U.S. exempt recipient, a U.S. non-exempt recipient, or a foreign person. See paragraphs (c)(2), (20), and (21) of this section for the definitions of foreign person, U.S. exempt recipient, and U.S. non-exempt recipient. In the case of a foreign person, the statement must indicate whether the foreign person is a beneficial owner or an intermediary, flow-through entity, or U.S. branch described in paragraph (b)(2)(iv) of this section and include the type of recipient, based on recipient codes used for filing Forms 1042–S, if the foreign person is a recipient as defined in § 1.1461–1(c)(1)(ii).

(*2*) The withholding statement must allocate each payment, by income type, to every payee (including U.S. exempt recipients) for whom documentation has been provided. Any payment that cannot be reliably associated with valid documentation from a payee shall be treated as made to an unknown payee in accordance with the presumption rules of paragraph (b) of this section and §§ 1.1441–5(d) and (e)(6) and 1.6049–5(d). For this purpose, a type of income is determined by the types of income required to be reported on Forms 1042–S or 1099, as appropriate. Notwithstanding the preceding sentence, deposit interest (including original issue discount) described in section 871(i)(2)(A) or 881(d) and interest or original issue discount on short-term obligations as described in section 871(g)(1)(B) or 881(e) is only required to be allocated to the extent it is required to be reported on Form 1099 or Form 1042–S. See § 1.6049–8 (regarding reporting of bank deposit interest to certain foreign persons). If a payee receives income through another nonqualified intermediary, flow-through entity, or U.S. branch described in paragraph (e)(2)(iv) of this section (other than a U.S. branch treated as a U.S. person), the withholding certificate must also state, with respect to the payee, the name, address, and TIN, if known, of the other nonqualified intermediary or U.S. branch from which the payee directly receives the payment or the flow-through entity in which the payee has a direct ownership interest. If another nonqualified intermediary, flow-through entity, or U.S. branch fails to allocate a payment, the name of the nonqualified intermediary, flow-through entity, or U.S. branch that failed to allocate the payment shall be provided with respect to such payment.

(*3*) If a payee is identified as a foreign person, the nonqualified intermediary must specify the rate of withholding to which the payee is subject, the payee's country of residence and, if a reduced rate of withholding is claimed, the basis for that reduced rate (e.g., treaty benefit, portfolio interest, exempt under section 501(c)(3), 892, or 895). The allocation statement must also include the taxpayer identification numbers of those foreign persons for whom such a number is required under paragraph (e)(4)(vii) of this section or § 1.1441–6(b)(1) (regarding claims for treaty benefits). In the case of a claim of treaty benefits, the nonqualified intermediary's withholding statement must also state whether the limitation on benefits and section 894 statements required by § 1.1441–6(c)(5) have been provided, if required, in the beneficial owner's Form W–8 or associated with such owner's documentary evidence.

(*4*) The withholding statement must also contain any other information the withholding agent reasonably requests in order to fulfill its obligations under chapter 3, chapter 61 of the Internal Revenue Code, and section 3406.

(D) *Alternative procedures*—(*1*) *In general.* Under the alternative procedures of this paragraph (e)(3)(iv)(D), a nonqualified intermediary may provide information allocating a payment of a reportable amount to each payee (including U.S. exempt recipients) otherwise required under paragraph (e)(3)(iv)(B)*(2)* of this section after a payment is made. To use the alternative procedure of this paragraph (e)(3)(iv)(D), the nonqualified intermediary must inform the withholding agent on a statement associated with its nonqualified intermediary withholding certificate that it is using the procedure under this paragraph (e)(3)(iv)(D) and the withholding agent must agree to the procedure. If the requirements of the alternative procedure are met, a withholding agent, including the nonqualified intermediary using the procedures, can treat the payment as reliably associated with documentation and, therefore, the presumption rules of paragraph (b)(3) of this section and §§ 1.1441–5(d) and (e)(6) and 1.6049–5(d) do not apply even though information allocating the payment to each payee has not been received prior to the payment. See paragraph (e)(3)(iv)(D)(*7*) of this section, however, for a nonqualified intermediary's liability for tax and penalties if the requirements of this paragraph (e)(3)(iv)(D) are not met. These alternative procedures shall not be used for payments that are allocable to U.S. non-exempt recipients. Therefore, a nonqualified intermediary is required to provide a withholding agent with information allocating payments of reportable amounts to U.S. non-exempt recipients prior to the payment being made by the withholding agent.

(*2*) *Withholding rate pools.* In place of the information required in paragraph (e)(3)(iv)(B)(*2*) of this section allocating payments to each payee, the nonqualified intermediary must provide a withholding agent with withholding rate pool information prior to the payment of a reportable amount. The withholding statement must contain all other information required by paragraph (e)(3)(iv)(B) of this section. Further, each payee listed in the withholding statement must be assigned to an identified withholding rate pool. To the extent a nonqualified intermediary is required to, or does provide, documentation, the alternative procedures do not relieve the nonqualified intermediary from the requirement to provide documentation prior to the payment being made. Therefore, withholding certificates or other appropriate documentation and all information required by paragraph (e)(3)(iv)(B) of this section (other than allocation information) must be provided to a withholding agent before any new payee receives a reportable amount. In addition, the withholding statement must be updated by assigning a new payee to a withholding rate pool prior to the payment of a reportable amount. A withholding rate pool is a payment of a single type of income, determined in accordance with the categories of income used to file Form 1042–S, that is subject to a single rate of withholding. A withholding rate pool may be established by any reasonable method to which the nonqualified intermediary and a withholding agent agree (*e.g.,* by establishing a separate

account for a single withholding rate pool, or by dividing a payment made to a single account into portions allocable to each withholding rate pool). The nonqualified intermediary shall determine withholding rate pools based on valid documentation or, to the extent a payment cannot be reliably associated with valid documentation, the presumption rules of paragraph (b)(3) of this section and §§ 1.1441–5(d) and (e)(6) and 1.6049–5(d).

(*3*) *Allocation information.* The nonqualified intermediary must provide the withholding agent with sufficient information to allocate the income in each withholding rate pool to each payee (including U.S. non-exempt recipients) within the pool no later than January 31 of the year following the year of payment. Any payments that are not allocated to payees for whom documentation has been provided shall be allocated to an undocumented payee in accordance with the presumption rules of paragraph (b)(3) of this section and §§ 1.1441–5(d) and (e)(6) and 1.6049–5(d). Notwithstanding the preceding sentence, deposit interest (including original issue discount) described in section 871(i)(2)(A) or 881(d) and interest or original issue discount on short-term obligations as described in section 871(g)(1)(B) or 881(e) is not required to be allocated to a U.S. exempt recipient or a foreign payee, except as required under § 1.6049–8 (regarding reporting of deposit interest paid to certain foreign persons).

(*4*) *Failure to provide allocation information.* If a nonqualified intermediary fails to provide allocation information, if required, by January 31 for any withholding rate pool, a withholding agent shall not apply the alternative procedures of this paragraph (e)(3)(iv)(D) to any payments of reportable amounts paid after January 31 in the taxable year following the calendar year for which allocation information was not given and any subsequent taxable year. Further, the alternative procedures shall be unavailable for any other withholding rate pool even though allocation information was given for that other pool. Therefore, the withholding agent must withhold on a payment of a reportable amount in accordance with the presumption rules of paragraph (b)(3) of this section, and §§ 1.1441–5(d) and (e)(6) and 1.6049–5(d), unless the nonqualified intermediary provides all of the information, including information sufficient to allocate the payment to each specific payee, required by paragraph (e)(3)(iv)(A) through (C) of this section prior to the payment. A nonqualified intermediary must allocate at least 90 percent of the income required to be allocated for each withholding rate pool or the nonqualified intermediary will be treated as having failed to provide allocation information for purposes of this paragraph (e)(3)(iv)(D). See paragraph (e)(3)(iv)(D)(7) of this section for liability for tax and penalties if a nonqualified intermediary fails to provide allocation information in whole or in part.

(*5*) *Cure provision.* A nonqualified intermediary may cure any failure to provide allocation information by providing the required allocation information to the withholding agent no later than February 14 following the calendar year of payment. If the withholding agent receives the allocation information by that date, it may apply the adjustment procedures of § 1.1461–2 to any excess withholding for payments made on or after February 1 and on or before February 14. Any nonqualified intermediary that fails to cure by February 14, may request the ability to use the alternative procedures of this paragraph (e)(3)(iv)(D) by submitting a request, in writing, to the Assistant Commissioner (International). The request must state the reason that the nonqualified intermediary did not comply with the alternative procedures of this paragraph (e)(3)(iv)(D) and steps that the nonqualified intermediary has taken, or will take, to ensure that no failures occur in the future. If the Assistant Commissioner (International) determines that the alternative procedures of this paragraph (e)(3)(iv)(D) may apply, a determination to that effect will be issued by the IRS to the nonqualified intermediary.

(*6*) *Form 1042–S reporting in case of allocation failure.* If a nonqualified intermediary fails to provide allocation information by February 14 following the year of payment for a withholding rate pool, the withholding agent must file Forms 1042-S for payments made to each payee in that pool (other than U.S. exempt recipients) in the prior calendar year by pro rating the payment to each payee (including U.S. exempt recipients) listed in the withholding statement for that withholding rate pool. If the nonqualified intermediary fails to allocate10 percent or less of an amount required to be allocated for a withholding rate pool, a withholding agent shall report the unallocated amount as paid to a single unknown payee in accordance with the presumption rules of paragraph (b) of this section and §§ 1.1441–5(d) and (e)(6) and 1.6049–5(d). The portion of the payment that can be allocated to specific recipients, as defined in § 1.1461–1(c)(1)(ii), shall be reported to each recipient in accordance with the rules of § 1.1461–1(c).

(*7*) *Liability for tax, interest, and penalties.* If a nonqualified intermediary fails to provide allocation information by February 14 following the year of payment for all or a portion of the payments made to any withholding rate pool, the withholding agent from whom the nonqualified intermediary received payments of reportable amounts shall not be liable for any tax, interest, or penalties, due solely to the errors or omissions of the nonqualified intermediary. See § 1.1441–7(b)(2) through (10) for the due diligence requirements of a withholding agent. Because failure by the nonqualified intermediary to provide allocation information results in a payment not being reliably associated with valid documentation, the beneficial owners for whom the nonqualified intermediary acts are not entitled to a reduced rate of withholding. Therefore, the nonqualified intermediary, as a withholding agent, shall be liable for any tax not withheld by the withholding agent in accordance with the presumption rules, interest on the under withheld tax if the nonqualified intermediary fails to pay the tax timely, and any applicable penalties, including the penalties under sections 6656 (failure to deposit), 6721 (failure to file information returns) and 6722 (failure to file payee statements). Failure to provide allocation information for more than 10 percent of the payments made to a particular withholding rate pool will be presumed to be an intentional failure within the meaning of sections 6721(e) and 6722(c). The nonqualified intermediary may rebut the presumption.

(*8*) *Applicability to flow-through entities and certain U.S. branches.* See paragraph (e)(3)(v) of this section and § 1.1441–5(c)(3)(iv) and (e)(5)(iv) for the applicability of this paragraph (e)(3)(iv) to U.S. branches described in paragraph (b)(2)(iv) of this section (other than U.S. branches treated as U.S. persons) and flow-through entities.

(E) *Notice procedures.* The IRS may notify a withholding agent that the alternative procedures of paragraph (e)(3)(iv)(D) of this section are not applicable to a specified nonqualified intermediary, a U.S. branch described in paragraph (b)(2)(iv) of this section, or a flow-through entity. If a withholding agent receives such a notice, it must commence withholding in accordance with the presumption rules of paragraph (b)(3) of this section and §§ 1.1441–5(d) and (e)(6) and 1.6049–5(d) unless the

nonqualified intermediary, U.S. branch, or flow-through entity complies with the procedures in paragraphs (e)(3)(iv)(A) through (C) of this section. In addition, the IRS may notify a withholding agent, in appropriate circumstances, that it must apply the presumption rules of paragraph (b)(3) of this section and §§ 1.1441–5(d) and (e)(6) and 1.6049–5(d) to payments made to a nonqualified intermediary, a U.S. branch, or a flow-through entity even if the nonqualified intermediary, U.S. branch or flow-through entity provides allocation information prior to the payment. A withholding agent that receives a notice under this paragraph (e)(3)(iv)(E) must commence withholding in accordance with the presumption rules within 30 days of the date of the notice. The IRS may withdraw its prohibition against using the alternative procedures of paragraph (e)(3)(iv)(D) of this section, or its requirement to follow the presumption rules, if the nonqualified intermediary, U.S. branch, or flow-through entity can demonstrate to the satisfaction of the Assistant Commissioner (International) or his delegate that it is capable of complying with the rules under chapter 3 of the Internal Revenue Code and any other conditions required by the Assistant Commissioner (International).

(v) *Withholding certificate from certain U.S. branches.* A U.S. branch certificate is a withholding certificate provided by a U.S. branch described in paragraph (b)(2)(iv) of this section that is not the beneficial owner of the income. The withholding certificate is provided with respect to reportable amounts and must state that such amounts are not effectively connected with the conduct of a trade or business in the United States. The withholding certificate must either transmit the appropriate documentation for the persons for whom the branch receives the payment (i.e., as an intermediary) or be provided as evidence of its agreement with the withholding agent to be treated as a U.S. person with respect to any payment associated with the certificate. A U.S. branch withholding certificate is valid only if it is furnished on a Form W–8, an acceptable substitute form, or such other form as the IRS may prescribe, it is signed under penalties of perjury by a person authorized to sign for the branch, its validity has not expired, and it contains the information, statements, and certifications described in this paragraph (e)(3)(v). If the certificate is furnished to transmit withholding certificates and other documentation, it must contain the information, certifications, and statements described in paragraphs (e)(3)(v)(A) through (C) of this section and in paragraphs (e)(3)(iii) and (iv) (alternative procedures) of this section, applying the term *U.S. branch* instead of the term *nonqualified intermediary.* If the certificate is furnished pursuant to an agreement to treat the U.S. branch as a U.S. person, the information and certifications required on the withholding certificate are limited to the following—

(A) The name of the person of which the branch is a part and the address of the branch in the United States;

(B) A certification that the payments associated with the certificate are not effectively connected with the conduct of its trade or business in the United States; and

(C) Any other information, certifications, or statements as may be required by the form or accompanying instructions in addition to, or in lieu of, the information and certification described in this paragraph (e)(3)(v).

(vi) *Reportable amounts.* For purposes of chapter 3 of the Internal Revenue Code, a nonqualified intermediary, qualified intermediary, flow-through entity, and U.S. branch described in paragraph (b)(2)(iv) of this section (other than a U.S. branch that agrees to be treated as a U.S. person) must provide a withholding certificate and associated documentation and other information with respect to reportable amounts. For purposes of the regulations under chapter 3 of the Internal Revenue Code, the term reportable amount means an amount subject to withholding within the meaning of § 1.1441–2(a), bank deposit interest (including original issue discount) and similar types of deposit interest described in section 871(i)(2)(A) or 881(d) that are from sources within the United States, and any amount of interest or original issue discount from sources within the United States on the redemption of certain short-term obligations described in section 871(g)(1)(B) or 881(e). Reportable amounts shall not include amounts received on the sale or exchange (other than a redemption) of an obligation described in section 871(g)(1)(B) or 881(e) that is effected at an office outside the United States. See § 1.6045–1(g)(3) to determine whether a sale is effected at an office outside the United States. Reportable amounts also do not include payments with respect to deposits with banks and other financial institutions that remain on deposit for a period of two weeks or less, to amounts of original issue discount arising from a sale and repurchase transaction that is completed within a period of two weeks or less, or to amounts described in § 1.6049–5(b)(7), (10) or (11) (relating to certain obligations issued in bearer form). While short-term OID and bank deposit interest are not subject to withholding under chapter 3 of the Internal Revenue Code, such amounts may be subject to information reporting under section 6049 if paid to a U.S. person who is not an exempt recipient described in § 1.6049–4(c)(1)(ii) and to backup withholding under section 3406 in the absence of documentation. See § 1.6049–5(d)(3)(iii) for applicable procedures when such amounts are paid to a foreign intermediary.

(4) * * *

(ii) *Period of validity*—(A) *Three-year period.* A withholding certificate described in paragraph (e)(2)(i) of this section, or a certificate described in § 1.871–14(c)(2)(v) (furnished to qualify interest as portfolio interest for purposes of sections 871(h) and 881(c)), shall remain valid until the earlier of the last day of the third calendar year following the year in which the withholding certificate is signed or the day that a change in circumstances occurs that makes any information on the certificate incorrect. For example, a withholding certificate signed on September 30, 2001, remains valid through December 31, 2004, unless circumstances change that make the information on the form no longer correct. Documentary evidence described in §§ 1.1441–6(c)(3) or (4) or 1.6049–5(c)(1) shall remain valid until the earlier of the last day of the third calendar year following the year in which the documentary evidence is provided to the withholding agent or the day that a change in circumstances occurs that makes any information on the documentary evidence incorrect.

(B) * * *

(*1*) A withholding certificate described in paragraph (e)(2)(ii) of this section that is furnished with a TIN, provided that the withholding agent reports at least one payment annually to the beneficial owner under § 1.1461–1(c) or the TIN furnished on the certificate is reported to the IRS under the procedures described in § 1.1461–1(d). For example, assume a withholding agent receives a Form W–8 in 2001 from a beneficial owner with respect to an account that contains bonds, the interest on which must be reported on Form 1042–S under § 1.1461–1(c). The Form W–8 contains a valid TIN and the withholding agent reports on Forms 1042–S interest to the beneficial owner for 2001 through 2005. In 2005, the beneficial owner sells some of the bonds. For purposes of the exemption from Form 1099 reporting under § 1.6045–1(g), the withholding

agent may consider the Form W–8 as valid, even though the payment of the sales proceeds is not reportable on Form 1042–S under § 1.1461–1(c) and even though the Form W–8 was provided more than three years previously.

(*2*) A certificate described in paragraph (e)(3)(ii) of this section (a qualified intermediary withholding certificate) but not including the withholding certificates, documentary evidence, statements or other information associated with the certificate.

(*3*) A certificate described in paragraph (e)(3)(iii) of this section (a nonqualified intermediary certificate), but not including the withholding certificates, documentary evidence, statements or other information associated with the certificate.

(*4*) A certificate described in paragraph (e)(3)(v) of this section (a U.S. branch withholding certificate), but not including the withholding certificates, documentary evidence, statements or other information associated with the certificate.

* * * * *

(*6*) A certificate described in § 1.1441–5(c)(3)(iii) (a withholding certificate from a nonwithholding foreign partnership) but not including the withholding certificates, documentary evidence, statements or other information required to be associated with the certificate.

* * * * *

(*8*) A withholding certificate described in § 1.1441–5(e)(5)(iii) provided by a foreign simple trust or a foreign grantor trust to transmit documentation of beneficiaries or owners, but not including the withholding certificates, documentary evidence, statements or other information associated with the certificate.

* * * * *

(iv) *Electronic transmission of information*—(A) *In general*. A withholding agent may establish a system for a beneficial owner or payee to electronically furnish a Form W–8, an acceptable substitute Form W–8, or such other form as the Internal Revenue Service may prescribe. The system must meet the requirements described in paragraph (e)(4)(iv)(B) of this section. A withholding agent may accept Forms W–8 that are furnished electronically on or after January 1, 2000, provided the requirements of paragraph (e)(4)(iv)(B) of this section are met.

(B) *Requirements*—(*1*) *In general*. The electronic system must ensure that the information received is the information sent, and must document all occasions of user access that result in the submission renewal, or modification of a Form W–8. In addition, the design and operation of the electronic system, including access procedures, must make it reasonably certain that the person accessing the system and furnishing Form W–8 is the person named in the Form.

(*2*) *Same information as paper Form W–8*. The electronic transmission must provide the withholding agent or payor with exactly the same information as the paper Form W–8.

(*3*) *Perjury statement and signature requirements*. The electronic transmission must contain an electronic signature by the person whose name is on the Form W–8 and the signature must be under penalties of perjury in the manner described in this paragraph (e)(4)(iv)(B)(*3*).

(*i*) *Perjury statement*. The perjury statement must contain the language that appears on the paper Form W–8. The electronic system must inform the person whose name is on the Form W–8 that the person must make the declaration contained in the perjury statement and that the declaration is made by signing the Form W–8. The instructions and the language of the perjury statement must immediately follow the person's certifying statements and immediately precede the person's electronic signature.

(*ii*) *Electronic signature*. The act of the electronic signature must be effected by the person whose name is on the electronic Form W–8. The signature must also authenticate and verify the submission. For this purpose, the terms *authenticate* and *verify* have the same meanings as they do when applied to a written signature on a paper Form W–8. An electronic signature can be in any form that satisfies the foregoing requirements. The electronic signature must be the final entry in the person's Form W–8 submission.

(*4*) *Requests for electronic Form W–8 data*. Upon request by the Internal Revenue Service during an examination, the withholding agent must supply a hard copy of the electronic Form W–8 and a statement that, to the best of the withholding agent's knowledge, the electronic Form W–8 was filed by the person whose name is on the form. The hard copy of the electronic Form W–8 must provide exactly the same information as, but need not be identical to, the paper Form W–8.

(C) *Special requirements for transmission of Forms W–8 by an intermediary*. [Reserved]

* * * * *

(vii) *Requirement of taxpayer identifying number*. A TIN must be stated on a withholding certificate when required by this paragraph (e)(4)(vii). A TIN is required to be stated on—

(A) A withholding certificate on which a beneficial owner is claiming the benefit of a reduced rate under an income tax treaty (other than for amounts described in § 1.1441–6(c)(2);

(B) A withholding certificate on which a beneficial owner is claiming exemption from withholding because income is effectively connected with a U.S. trade or business;

(C) A withholding certificate on which a beneficial owner is claiming exemption from withholding under section 871(f) for certain annuities received under qualified plans;

(D) A withholding certificate on which a beneficial owner is claiming an exemption based solely on a foreign organization's claim of tax exempt status under section 501(c) or private foundation status (however, a TIN is not required from a foreign private foundation that is subject to the 4-percent tax under section 4948(a) on income if that income would be exempt from withholding but for section 4948(a) (*e.g.,* portfolio interest));

(E) A withholding certificate from a person representing to be a qualified intermediary described in paragraph (e)(5)(ii) of this section;

(F) A withholding certificate from a person representing to be a withholding foreign partnership described in § 1.1441–5(c)(2)(i));

(G) A withholding certificate from a person representing to be a foreign grantor trust with 5 or fewer grantors;

(H) A withholding certificate provided by a foreign organization that is described in section 501(c);

(I) A withholding certificate from a person representing to be a U.S. branch described in paragraph (b)(2)(iv) of this section.

* * * * *

(ix) * * *

(A) * * *

(*4*) A withholding agent may rely on documentation furnished by a beneficial owner or payee to an agent of the withholding agent. The agent may retain the documentation as part of an information system maintained for a single or multiple withholding agents provided that the system permits any withholding agent that uses the system to easily access data regarding the nature of the documentation, the information contained in the documentation, and its validity, and must allow the withholding agent to easily transmit data into the system regarding any facts of which it becomes aware that may affect the reliability of

the documentation. The withholding agent must be able to establish how and when it has accessed the data regarding the documentation and, if applicable, how and when it has transmitted data regarding any facts of which it became aware that may affect the reliability of the documentation. In addition, the withholding agent must be able to establish that any data it has transmitted to the information system has been processed and appropriate due diligence has been exercised regarding the validity of the documentation.

* * * * *

(C) *Special rule for brokers*—(*1*) *In general.* A withholding agent may rely on the certification of a broker that the broker holds a valid beneficial owner withholding certificate described in paragraph (e)(2)(i) of this section or other appropriate documentation for that beneficial owner with respect to any readily tradable instrument, as defined in § 31.3406(h)–1(d) of this chapter, if the broker is a United States person (including a U.S. branch treated as a U.S. person under paragraph (b)(2)(iv) of this section) that is acting as the agent of a beneficial owner and the U.S. broker has been provided a valid Form W–8 or other appropriate documentation. The certification must be in writing or in electronic form and contain all of the information required of a nonqualified intermediary under paragraphs (e)(3)(iv)(B) and (C) of this section. If a U.S. broker chooses to use this paragraph (e)(4)(ix)(C), that U.S. broker will be solely responsible for applying the rules of § 1.1441–7(b) to the withholding certificates or other appropriate documentation. For purposes of this paragraph (c)(4)(ix)(C), the term broker means a person treated as a broker under § 1.6045–1(a).

(*2*) The following example illustrates the rules of this paragraph (e)(4)(ix)(C):

Example. SCO is a U.S. securities clearing organization that provides clearing services for correspondent broker, CB, a U.S. corporation. Pursuant to a fully disclosed clearing agreement, CB fully discloses the identity of each of its customers to SCO. Part of SCO's clearing duties include the crediting of income and gross proceeds of readily tradeable instruments (as defined in § 31.3406(h)–1(d)) to each customer's account. For each disclosed customer that is a foreign beneficial owner, CB provides SCO with information required under paragraphs (e)(3)(iv)(B) and (C) of this section that is necessary to apply the correct rate of withholding and to file Forms 1042–S. SCO may use the representations and beneficial owner information provided by CB to determine the proper amount of withholding and to file Forms 1042–S. CB is responsible for determining the validity of the withholding certificates or other appropriate documentation under § 1.1441–1(b).

* * * * *

(5) *Qualified intermediaries*—(i) *General rule.* A qualified intermediary, as defined in paragraph (e)(5)(ii) of this section, may furnish a qualified intermediary withholding certificate to a withholding agent. The withholding certificate provides certifications on behalf of other persons for the purpose of claiming and verifying reduced rates of withholding under section 1441 or 1442 and for the purpose of reporting and withholding under other provisions of the Internal Revenue Code, such as the provisions under chapter 61 and section 3406 (and the regulations under those provisions). Furnishing such a certificate is in lieu of transmitting to a withholding agent withholding certificates or other appropriate documentation for the persons for whom the qualified intermediary receives the payment, including interest holders in a qualified intermediary that is fiscally transparent under the regulations under section 894. Although the qualified intermediary is required to obtain withholding certificates or other appropriate documentation from beneficial owners, payees, or interest holders pursuant to its agreement with the IRS, it is generally not required to attach such documentation to the intermediary withholding certificate. Notwithstanding the preceding sentence a qualified intermediary must provide a withholding agent with the Forms W–9, or disclose the names, addresses, and taxpayer identifying numbers, if known, of those U.S. non-exempt recipients for whom the qualified intermediary receives reportable amounts (within the meaning of paragraph (e)(3)(vi) of this section) to the extent required in the qualified intermediary's agreement with the IRS. A person may claim qualified intermediary status before an agreement is executed with the IRS if it has applied for such status and the IRS authorizes such status on an interim basis under such procedures as the IRS may prescribe.

* * * * *

(iii) *Withholding agreement*—(A) *In general.* The IRS may, upon request, enter into a withholding agreement with a foreign person described in paragraph (e)(5)(ii) of this section pursuant to such procedures as the IRS may prescribe in published guidance (see § 601.601(d)(2) of this chapter). Under the withholding agreement, a qualified intermediary shall generally be subject to the applicable withholding and reporting provisions applicable to withholding agents and payors under chapters 3 and 61 of the Internal Revenue Code, section 3406, the regulations under those provisions, and other withholding provisions of the Internal Revenue Code, except to the extent provided under the agreement.

(B) *Terms of the withholding agreement.* Generally, the agreement shall specify the type of certifications and documentation upon which the qualified intermediary may rely to ascertain the classification (e.g., corporation or partnership) and status (i.e., U.S. or foreign) of beneficial owners and payees who receive payments collected by the qualified intermediary and, if necessary, entitlement to the benefits of a reduced rate under an income tax treaty. The agreement shall specify if, and to what extent, the qualified intermediary may assume primary withholding responsibility in accordance with paragraph (e)(5)(iv) of this section. It shall also specify the extent to which applicable return filing and information reporting requirements are modified so that, in appropriate cases, the qualified intermediary may report payments to the IRS on an aggregated basis, without having to disclose the identity of beneficial owners and payees. However, the qualified intermediary may be required to provide to the IRS the name and address of those foreign customers who benefit from a reduced rate under an income tax treaty pursuant to the qualified intermediary arrangement for purposes of verifying entitlement to such benefits, particularly under an applicable limitation on benefits provision. Under the agreement, a qualified intermediary may agree to act as an acceptance agent to perform the duties described in § 301.6109–1(d)(3)(iv)(A) of this chapter. The agreement may specify the manner in which applicable procedures for adjustments for underwithholding and overwithholding, including refund procedures, apply in the context of a qualified intermediary arrangement and the extent to which applicable procedures may be modified. In particular, a withholding agreement may allow a qualified intermediary to claim refunds of overwithheld amounts. If relevant, the agreement shall specify the manner in which the qualified intermediary may deal with payments to other intermediaries and flow-through entities. In addition, the agreement shall specify the manner in which the IRS will verify compliance with the agreement. In appropriate cases, the IRS may agree to rely on audits performed by an intermediary's approved auditor. In such a case, the IRS's audit may be

limited to the audit of the auditor's records (including work papers of the auditor and reports prepared by the auditor indicating the methodology employed to verify the entity's compliance with the agreement). For this purpose, the agreement shall specify the auditor or class of auditors that are approved. Generally, an auditor will not be approved if the auditor is not subject to laws, regulations, or rules that impose sanctions for failure to exercise its independence and to perform the audit competently. The agreement may include provisions for the assessment and collection of tax in the event that failure to comply with the terms of the agreement results in the failure by the withholding agent or the qualified intermediary to withhold and deposit the required amount of tax. Further, the agreement may specify the procedures by which deposits of amounts withheld are to be deposited, if different from the deposit procedures under the Internal Revenue Code and applicable regulations. To determine whether to enter a qualified intermediary withholding agreement and the terms of any particular withholding agreement, the IRS will consider appropriate factors including whether or not the foreign person agrees to assume primary withholding responsibility, the type of local know-your-customer laws and practices to which it is subject, the extent and nature of supervisory and regulatory control exercised under the laws of the foreign country over the foreign person, the volume of investments in U.S. securities (determined in dollar amounts and number of account holders), the financial condition of the foreign person, and whether the qualified intermediary is a resident of a country with which the United States has an income tax treaty.

(iv) *Assignment of primary withholding responsibility.* Any person who meets the definition of a withholding agent under § 1.1441–7(a) (whether a U.S. person or a foreign person) is required to withhold and deposit any amount withheld under § 1.1461–1(a) and to make the returns prescribed by § 1.1461–1(b) and (c). If permitted by its qualified intermediary agreement, a qualified intermediary agreement may, however, inform a withholding agent from which it receives a payment that it will assume the primary obligation to withhold, deposit, and report amounts under chapter 3 of the Internal Revenue Code and/or under chapter 61 of the Internal Revenue Code and section 3406. If a withholding agent makes a payment of an amount subject to withholding, as defined in § 1.1441–2(a), or a reportable payment, as defined in section 3406(b), to a qualified intermediary that represents to the withholding agent that it has assumed primary withholding responsibility for the payment, the withholding agent is not required to withhold on the payment. The withholding agent is not required to determine that the qualified intermediary agreement actually permits the qualified intermediary to assume primary withholding responsibility. A qualified intermediary that assumes primary withholding responsibility under chapter 3 of the Internal Revenue Code or primary reporting and backup withholding responsibility under chapter 61 and section 3406 is not required to assume primary withholding responsibility for all accounts it has with a withholding agent but must assume primary withholding responsibility for all payments made to any one account that it has with the withholding agent. A qualified intermediary may agree with the withholding agent to assume primary withholding responsibility under chapter 3 and section 3406, only if expressly permitted to do so under its agreement with the IRS.

(v) *Withholding statement*—(A) *In general.* A qualified intermediary must provide each withholding agent from which it receives reportable amounts, as defined in paragraph (e)(3)(vi) of this section, as a qualified intermediary with a written statement (the withholding statement) containing the information specified in paragraph (e)(5)(v)(B) of this section. A withholding statement is not required, however, if all of the information a withholding agent needs to fulfill its withholding and reporting requirements is contained in the withholding certificate. The qualified intermediary agreement may require, in appropriate circumstances, the qualified intermediary to include information in its withholding statement relating to payments other than payments of reportable amounts. The withholding statement forms an integral part of the qualified intermediary's qualified intermediary withholding certificate and the penalties of perjury statement provided on the withholding certificate shall apply to the withholding statement as well. The withholding statement may be provided in any manner, and in any form, to which qualified intermediary and the withholding agent mutually agree, including electronically. If the withholding statement is provided electronically, there must be sufficient safeguards to ensure that the information received by the withholding agent is the information sent by qualified intermediary and must also document all occasions of user access that result in the submission or modification of withholding statement information. In addition, the electronic system must be capable of providing a hard copy of all withholding statements provided by the qualified intermediary. The withholding statement shall be updated as often as necessary for the withholding agent to meet its reporting and withholding obligations under chapters 3 and 61 of the Internal Revenue Code and section 3406. A withholding agent will be liable for tax, interest, and penalties in accordance with paragraph (b)(7) of this section to the extent it does not follow the presumption rules of paragraph (b)(3) of this section, §§ 1.1441–5(d) and (e)(6), and 1.6049–5(d) for any payment, or portion thereof, for which it does not have a valid withholding statement prior to making a payment.

(B) *Content of withholding statement.* The withholding statement must contain sufficient information for a withholding agent to apply the correct rate of withholding on payments from the accounts identified on the statement and to properly report such payments on Forms 1042–S and Forms 1099, as applicable. The withholding statement must—

(*1*) Designate those accounts for which the qualified intermediary acts as a qualified intermediary;

(*2*) Designate those accounts for which qualified intermediary assumes primary withholding responsibility under chapter 3 of the Internal Revenue Code and/or primary reporting and backup withholding responsibility under chapter 61 and section 3406; and

(*3*) Provide information regarding withholding rate pools, as described in paragraph (e)(5)(v)(C) of this section.

(C) *Withholding rate pools*—(*1*) *In general.* Except to the extent it has assumed both primary withholding responsibility under chapter 3 of the Internal Revenue Code and primary reporting and backup withholding responsibility under chapter 61 and section 3406 with respect to a payment, a qualified intermediary shall provide as part of its withholding statement the withholding rate pool information that is required for the withholding agent to meet its withholding and reporting obligations under chapters 3 and 61 of the Internal Revenue Code and section 3406. A withholding rate pool is a payment of a single type of income, determined in accordance with the categories of income reported on Form 1042–S or Form 1099, as applicable,

that is subject to a single rate of withholding. A withholding rate pool may be established by any reasonable method on which the qualified intermediary and a withholding agent agree (*e.g.,* by establishing a separate account for a single withholding rate pool, or by dividing a payment made to a single account into portions allocable to each withholding rate pool). To the extent a qualified intermediary does not assume primary reporting and backup withholding responsibility under chapter 61 and section 3406, a qualified intermediary's withholding statement must establish a separate withholding rate pool for each U.S. non-exempt recipient account holder that the qualified intermediary has disclosed to the withholding agent unless the qualified intermediary uses the alternative procedures in paragraph (e)(5)(v)(C)(*2*) of this section. A qualified intermediary shall determine withholding rate pools based on valid documentation that it obtains under its withholding agreement with the IRS, or if a payment cannot be reliably associated with valid documentation, under the applicable presumption rules. If a qualified intermediary has an account holder that is another intermediary (whether a qualified intermediary or a nonqualified intermediary) or a flow-through entity, the qualified intermediary may combine the account holder information provided by the intermediary or flow-through entity with the qualified intermediary's direct account holder information to determine the qualified intermediary's withholding rate pools.

(*2*) *Alternative procedure for U.S. non-exempt recipients.* If permitted under its agreement with the IRS, a qualified intermediary may, by mutual agreement with a withholding agent, establish a single withholding rate pool (not subject to backup withholding) for all U.S. non-exempt recipient account holders for whom the qualified intermediary has provided Forms W–9 prior to the withholding agent paying any reportable payments, as defined in section 3406(b), and a separate withholding rate pool (subject to 31-percent withholding) for all U.S. non-exempt recipient account holders for whom a qualified intermediary has not provided Forms W–9 prior to the withholding agent paying any reportable payments. If a qualified intermediary chooses the alternative procedure of this paragraph (e)(5)(v)(C)(*2*), the qualified intermediary must provide sufficient information to the withholding agent no later than January 15 of the year following the year in which the reportable payments are paid that allocates the reportable payments to each U.S. non-exempt recipient account holder. Failure to provide such information will result in the application of penalties to the qualified intermediary under sections 6721 and 6722, as well as any other applicable penalties, and may result in the termination of the qualified intermediary's withholding agreement with the IRS. A withholding agent shall not be liable for tax, interest, or penalties for failure to backup withhold or report information under chapter 61 of the Internal Revenue Code due solely to the errors or omissions of the qualified intermediary. If a qualified intermediary fails to provide the allocation information required by this paragraph (e)(5)(v)(C)(*2*), the withholding agent shall report the entire amount paid from the withholding rate pool to an unknown recipient, or otherwise in accordance with the appropriate Form 1099 and the instructions accompanying the form.

* * * * *

Par 4. Effective January 1, 2001, § 1.1441–2 is amended by:

1. Revising paragraph (a).
2. Revising paragraph (b)(1)(i).
3. Removing paragraph (b)(2)(ii), redesignating paragraph (b)(2)(iii) as paragraph (b)(2)(ii), and adding the word ''and'' after the semicolon in paragraph (b)(2)(i).
4. Revising paragraph (b)(3).

The revisions read as follows:

§ 1.1441–2 Amounts subject to withholding.

(a) *In general.* For purposes of the regulations under chapter 3 of the Internal Revenue Code, the term *amounts subject to withholding* means amounts from sources within the United States that constitute either fixed or determinable annual or periodical income described in paragraph (b) of this section or other amounts subject to withholding described in paragraph (c) of this section. For purposes of this paragraph (a), an amount shall be treated as being from sources within the United States if the source of the amount cannot be determined at the time of payment. See § 1.1441–3(d)(1) for determining the amount to be withheld from a payment in the absence of information at the time of payment regarding the source of the amount. Amounts subject to withholding include amounts that are not fixed or determinable annual or periodical income and upon which withholding is specifically required under a provision of this section or another section of the regulations under chapter 3 of the Internal Revenue Code (such as corporate distributions upon which withholding is required under § 1.1441–3(c)(1) that do not constitute dividend income). Amounts subject to withholding do not include—

(1) Amounts described in § 1.1441–1(b)(4)(i) to the extent they involve interest on obligations in bearer form or on foreign-targeted registered obligations (but, in the case of a foreign-targeted registered obligation, only to the extent of those amounts paid to a registered owner that is a financial institution within the meaning of section 871(h)(5)(B) or a member of a clearing organization which member is the beneficial owner of the obligation);

(2) Amounts described in § 1.1441–1(b)(4)(ii) (dealing with bank deposit interest and similar types of interest (including original issue discount) described in section 871(i)(2)(A) or 881(d));

(3) Amounts described in § 1.1441–1(b)(4)(iv) (dealing with interest or original issue discount on certain short-term obligations described in section 871(g)(1)(B) or 881(e));

(4) Amounts described in § 1.1441–1(b)(4)(xx) (dealing with income from certain gambling winnings exempt from tax under section 871(j));

(5) Amounts paid as part of the purchase price of an obligation sold or exchanged between interest payment dates, unless the sale or exchange is part of a plan the principal purpose of which is to avoid tax and the withholding agent has actual knowledge or reason to know of such plan;

(6) Original issue discount paid as part of the purchase price of an obligation sold or exchanged in a transaction other than a redemption of such obligation, unless the purchase is part of a plan the principal purpose of which is to avoid tax and the withholding agent has actual knowledge or reason to know of such plan; and

(7) Insurance premiums paid with respect to a contract that is subject to the section 4371 excise tax.

(b) *Fixed or determinable annual or periodical income*—(1) *In general*—(i) *Definition.* For purposes of chapter 3 of the Internal Revenue Code and the regulations thereunder, fixed or determinable annual or periodical income includes all income included in gross income under section 61 (including original issue discount) except for the items specified in paragraph (b)(2) of this section. Items of income that are excluded from gross income under a provision of law without regard to the U.S. or foreign status of the owner of the income, such as interest excluded from gross income

under section 103(a) or qualified scholarship income under section 117, shall not be treated as fixed or determinable annual or periodical income under chapter 3 of the Internal Revenue Code. Income excluded from gross income under section 892 (income of foreign governments) or section 115 (income of a U.S. possession) is fixed or determinable annual or periodical income since the exclusion from gross income under those sections is dependent on the foreign status of the owner of the income. See § 1.306–3(h) for treating income from the disposition of section 306 stock as fixed or determinable annual or periodical income.

* * * * *

(3) *Original issue discount*—(i) *Amount subject to tax.* An amount representing original issue discount is fixed or determinable annual or periodical income that is subject to tax under sections 871(a)(1)(C) and 881(a)(3) to the extent provided in those sections and this paragraph (b)(3) if not otherwise excluded under paragraph (a) of this section. An amount of original issue discount is subject to tax with respect to a foreign beneficial owner of an obligation carrying original issue discount upon a sale or exchange of the obligation or when a payment is made on such obligation. The amount taxable is the amount of original issue discount that accrued while the foreign person held the obligation up to the time that the obligation is sold or exchanged or that a payment is made on the obligation, reduced by any amount of original issue discount that was taken into account prior to that time (due to a payment made on the obligation). In the case of a payment made on the obligation, the tax due on the amount of original issue discount may not exceed the amount of the payment reduced by the tax imposed on any portion of the payment that is qualified stated interest.

(ii) *Amounts subject to withholding.* A withholding agent must withhold on the taxable amount of original issue discount paid on the redemption of an original issue discount obligation unless an exception to withholding applies (e.g., portfolio interest or treaty exception). In addition, withholding is required on the taxable amount of original issue discount upon the sale or exchange of an original issue discount obligation, other than in a redemption, to the extent the withholding agent has actual knowledge or reason to know that the sale or exchange is part of a plan the principal purpose of which is to avoid tax. If a withholding agent cannot determine the taxable amount of original issue discount on the redemption of an original issue discount obligation (or on the sale or exchange of such an obligation if the principal purpose of the sale is to avoid tax), then it must withhold on the entire amount of original issue discount accrued from the date of issue until the date of redemption (or the date the obligation is sold or exchanged) determined on the basis of the most recently published ''List of Original Issue Discount Instruments'' (IRS Publication 1212, available from the IRS Forms Distribution Center) or similar list published by the IRS as if the beneficial owner of the obligation had held the obligation since its original issue.

(iii) *Exceptions to withholding.* To the extent that this paragraph (b)(3) applies to require withholding by a person other than an issuer of an original issue discount obligation, or the issuer's agent, it shall apply only to obligations issued after December 31, 2000.

* * * * *

Par. 5. Effective January 1, 2001, § 1.1441–3 is amended by:

1. Revising paragraph (b)(2)(i).
2. Revising paragraph (c)(1).
3. Revising paragraph (c)(4)(i)(C).

The revisions read as follows:

§ 1.1441–3 Determination of amounts to be withheld.

* * * * *

(b) * * *

(2) *No withholding between interest payment dates*—(i) *In general.* A withholding agent is not required to withhold under § 1.1441–1 upon interest accrued on the date of a sale or exchange of a debt obligation when that sale occurs between two interest payment dates (even though the amount is treated as interest under § 1.61–7(c) or (d) and is subject to tax under section 871 or 881). See § 1.6045–1(c) for reporting requirements by brokers with respect to sale proceeds. See § 1.61–7(c) regarding the character of payments received by the acquirer of an obligation subsequent to such acquisition (that is, as a return of capital or interest accrued after the acquisition). Any exemption from withholding pursuant to this paragraph (b)(2)(i) applies without a requirement that documentation be furnished to the withholding agent. However, documentation may have to be furnished for purposes of the information reporting provisions under section 6045 or 6049 and backup withholding under section 3406. The exemption from withholding granted by this paragraph (b)(2) is not a determination that the accrued interest is not fixed or determinable annual or periodical income under section 871(a) or 881(a).

* * * * *

(c) *Corporate distributions*—(1) *General rule.* A corporation making a distribution with respect to its stock or any intermediary (described in § 1.1441–1(c)(13)) making a payment of such a distribution is required to withhold under section 1441, 1442, or 1443 on the entire amount of the distribution, unless it elects to reduce the amount of withholding under the provisions of this paragraph (c). Any exceptions from withholding provided by this paragraph (c) apply without any requirement to furnish documentation to the withholding agent. However, documentation may have to be furnished for purposes of the information reporting provisions under section 6042 or 6045 and backup withholding under section 3406. See § 1.1461–1(c) to determine whether amounts excepted from withholding under this section are considered amounts that are subject to reporting.

* * * * *

(4) * * * (i) * * *

(C) *Coordination with REIT withholding.* Withholding is required under section 1441 (or 1442 or 1443) on the portion of a distribution from a REIT that is not designated as a capital gain dividend, a return of basis, or a distribution in excess of a shareholder's adjusted basis in the stock of the REIT that is treated as a capital gain under section 301(c)(3). A distribution in excess of a shareholder's adjusted basis in the stock of the REIT is, however, subject to withholding under section 1445, unless the interest in the REIT is not a U.S. real property interest (e.g., an interest in a domestically controlled REIT under section 897(h)(2)). In addition, withholding is required under section 1445 on the portion of the distribution designated by a REIT as a capital gain dividend. See § 1.1445–8.

* * * * *

Par. 6. Effective January 1, 2001, § 1.1441–4 is amended by:

1. Revising paragraph (a)(3)(i).
2. Revising paragraph (b)(1)(ii).

The revisions read as follows:

§ 1.1441–4 Exemptions from withholding for certain effectively connected income and other amounts.

(a) * * *

(3) *Income on notional principal contracts*—(i) *General rule.* A withholding agent that pays amounts attributable to a notional principal contract described in § 1.863–7(a) or 1.988–2(e) shall have no obligation to withhold on the amounts paid under the

terms of the notional principal contract regardless of whether a withholding certificate is provided. However, a withholding agent must file returns under § 1.1461–1(b) and (c) reporting the income that it must treat as effectively connected with the conduct of a trade or business in the United States under the provisions of this paragraph (a)(3). Except as otherwise provided in paragraph (a)(3)(ii) of this section, a withholding agent must treat the income as effectively connected with the conduct of a U.S. trade or business if the income is paid to, or to the account of, a qualified business unit of a foreign person located in the United States or, if the payment is paid to, or to the account of, a qualified business unit of a foreign person located outside the United States, the withholding agent knows, or has reason to know, the payment is effectively connected with the conduct of a trade or business within the United States. Income on a notional principal contract does not include the amount characterized as interest under the provisions of § 1.446–3(g)(4).

* * * * *

(b) * * * (1) * * *

(ii) Such compensation would be subject to withholding under section 3402 but for the provisions of section 3401(a) (not including section 3401(a)(6)) and the regulations under that section. This paragraph (b)(1)(ii) does not apply to payments to a nonresident alien individual from any trust described in section 401(a), any annuity plan described in section 403(a), any annuity, custodial account, or retirement income account described in section 403(b), or an individual retirement account or individual retirement annuity described in section 408. Instead, these payments are subject to withholding under this section to the extent they are exempted from the definition of wages under section 3401(a)(12) or to the extent they are from an annuity, custodial account, or retirement income account described in section 403(b), or an individual retirement account or individual retirement annuity described in section 408. Thus, for example, payments to a nonresident alien individual from a trust described in section 401(a) are subject to withholding under section 1441 and not under section 3405 or section 3406.

* * * * *

Par. 7. Effective January 1, 2001, in § 1.1441–5 paragraphs (a) through (e) are revised to read as follows:

§ 1.1441–5 Withholding on payments to partnerships, trusts, and estates.

(a) *In general.* This section describes the rules that apply to payments made to partnerships, trusts, and estates. Paragraph (b) of this section prescribes the rules that apply to a withholding agent making a payment to a U.S. partnership, trust, or estate. It also prescribes the obligations of a U.S. partnership, trust, or estate that makes a payment to a foreign partner, beneficiary, or owner. Paragraph (c) of this section prescribes rules that apply to a withholding agent that makes a payment to a foreign partnership. Paragraph (d) of this section provides presumption rules that apply to payments made to foreign partnerships. Paragraph (e) of this section prescribes rules, including presumption rules, that apply to a withholding agent that makes a payment to a foreign trust or foreign estate.

(b) *Rules applicable to U.S. partnerships, trusts, and estates*—(1) *Payments to U.S. partnerships, trusts, and estates.* No withholding is required under section 1.1441–1(b)(1) on a payment of an amount subject to withholding (as defined in § 1.1441–2(a)) that a withholding agent may treat as made to a U.S. payee. Therefore, if a withholding agent can reliably associate (within the meaning of § 1.1441–2(b)(vii)) a Form W–9 provided in accordance with § 1.1441–1(d)(2) or (4) by a U.S. partnership, U.S. trust, or a U.S. estate the withholding agent may treat the payment as made to a U.S. payee and the payment is not subject to withholding under section 1441 even though the partnership, trust, or estate may have foreign partners, beneficiaries, or owners. A withholding agent is also not required to withhold under section 1441 on a payment it makes to an entity presumed to be a U.S. payee under paragraphs (d)(2) and (e)(6)(ii) of this section.

(2) *Withholding by U.S. payees*—(i) *U.S. partnerships*—(A) *In general.* A U.S. partnership is required to withhold under § 1.1441–1 as a withholding agent on an amount subject to withholding (as defined in § 1.1441–2(a)) that is includible in the gross income of a partner that is a foreign person. Subject to paragraph (b)(2)(v) of this section, a U.S. partnership shall withhold when any distributions that include amounts subject to withholding (including guaranteed payments made by a U.S. partnership) are made. To the extent a foreign partner's distributive share of income subject to withholding has not actually been distributed to the foreign partner, the U.S. partnership must withhold on the foreign partner's distributive share of the income on the earlier of the date that the statement required under section 6031(b) is mailed or otherwise provided to the partner or the due date for furnishing the statement.

(B) *Effectively connected income of partners.* Withholding on items of income that are effectively connected income in the hands of the partners who are foreign persons is governed by section 1446 and not by this section. In such a case, partners in a domestic partnership are not required to furnish a withholding certificate in order to claim an exemption from withholding under section 1441(c)(1) and § 1.1441–4.

(ii) *U.S. simple trusts.* A U.S. trust that is described in section 651(a) (a U.S. simple trust) is required to withhold under chapter 3 of the Internal Revenue Code as a withholding agent on the distributable net income includible in the gross income of a foreign beneficiary to the extent the distributable net income is an amount subject to withholding (as defined in § 1.1441–2(a)). A U.S. simple trust shall withhold when a distribution is made to a foreign beneficiary. The U.S. trust may make a reasonable estimate of the portion of the distribution that constitutes distributable net income consisting of an amount subject to withholding and apply the appropriate rate of withholding to the estimated amount. If, at the end of the taxable year in which the distribution is made, the U.S. simple trust determines that it underwithheld under section 1441 or 1442, the trust shall be liable as a withholding agent for the amount under withheld under section 1461. No penalties shall be imposed for failure to withhold and deposit the tax if the U.S. simple trust's estimate was reasonable and the trust pays the underwithheld amount on or before the due date of Form 1042 under section 1461. Any payment of underwithheld amounts by the U.S. simple trust shall not be treated as income subject to additional withholding even if that amount is treated as additional income to the foreign beneficiary, unless the additional amount is income to the foreign beneficiary as a result of a contractual arrangement between the parties regarding the satisfaction of the foreign beneficiary's tax liability. To the extent a U.S. simple trust is required to, but does not, distribute such income to a foreign beneficiary, the U.S. trust must withhold on the foreign beneficiary's allocable share at the time the income is required (without extension) to be reported on Form 1042-S under § 1.1461–1(c).

(iii) *U.S. complex trusts and U.S. estates.* A U.S. trust that is not a trust described in section 651(a) (a U.S. complex trust) is required to withhold under chapter 3 of the Internal Revenue Code as a withholding agent on the distributable net income includible in the gross income of a foreign beneficiary to the extent the distributable net income consists of an amount subject to withholding (as defined in § 1.1441–2(a)) that is, or is required to be, distributed currently. The U.S. complex trust shall withhold when a distribution is made to a foreign beneficiary. The trust may use the same procedures regarding an estimate of the amount subject to withholding as a U.S. simple trust under paragraph (b)(2)(ii) of this section. To the extent an amount subject to withholding is required to be, but is not actually distributed, the U.S. complex trust must withhold on the foreign beneficiary's allocable share at the time the income is required to be reported on Form 1042-S under § 1.1461–1(c), without extension. A U.S. estate is required to withhold under chapter 3 of the Internal Revenue Code on the distributable net income includible in the gross income of a foreign beneficiary to the extent the distributable net income consists of an amount subject to withholding (as defined in § 1.1441–2(a)) that is actually distributed. A U.S. estate may also use the reasonable estimate procedures of paragraph (b)(2)(ii) of this section. However, those procedures apply to an estate that has a taxable year other than a calendar year only if the estate files an amended return on Form 1042 for the calendar year in which the distribution was made and pays the underwithheld tax and interest within 60 days after the close of the taxable year in which the distribution was made.

(iv) *U.S. grantor trusts.* A U.S. trust that is described in section 671 through 679 (a U.S. grantor trust) must withhold on any income includible in the gross income of a foreign person that is treated as an owner of the grantor trust to the extent the amount includible consists of an amount that is subject to withholding (as described in § 1.1441–2(a)). The withholding must occur at the time the income is received by, or credited to, the trust.

(v) *Subsequent distribution.* If a U.S. partnership or U.S. trust withholds on a foreign partner, beneficiary, or owner's share of an amount subject to withholding before the amount is actually distributed to the partner, beneficiary, or owner, withholding is not required when the amount is subsequently distributed.

(c) *Foreign partnerships*—(1) *Determination of payee*—(i) *Payments treated as made to partners.* Except as otherwise provided in paragraph (c)(1)(ii) of this section, the payees of a payment to a person that the withholding agent may treat as a nonwithholding foreign partnership under paragraph (c)(3)(i) or (d)(2) of this section are the partners (looking through partners that are foreign intermediaries or flow-through entities) as follows—

(A) If the withholding agent can reliably associate a partner's distributive share of the payment with a valid Form W–9 provided under § 1.1441–1(d), the partner is a U.S. payee;

(B) If the withholding agent can reliably associate a partner's distributive share of the payment with a valid Form W–8, or other appropriate documentation, provided under § 1.1441–1(e)(1)(ii), the partner is a payee that is a foreign beneficial owner;

(C) If the withholding agent can reliably associate a partner's distributive share of the payment with a qualified intermediary withholding certificate under § 1.1441–1(e)(3)(ii), a nonqualified intermediary withholding certificate under § 1.1441–1(e)(3)(iii), or a U.S. branch certificate under § 1.1441–1(e)(3)(v), then the rules of § 1.1441–1(b)(2)(v) shall apply to determine who the payee is in the same manner as if the partner's distributive share of the payment had been paid directly to such intermediary or U.S. branch;

(D) If the withholding agent can reliably associate the partner's distributive share with a withholding foreign partnership certificate under paragraph (c)(2)(iv) of this section or a nonwithholding foreign partnership certificate under paragraph (c)(3)(iii) of this section, then the rules of this paragraph (c)(1)(i) or paragraph (c)(1)(ii) of this section shall apply to determine whether the payment is treated as made to the partners of the higher-tier partnership under this paragraph (c)(1)(i) or to the higher-tier partnership itself (under the rules of paragraph (c)(1)(ii) of this section) in the same manner as if the partner's distributive share of the payment had been paid directly to the higher-tier foreign partnership;

(E) If the withholding agent can reliably associate the partner's distributive share with a withholding certificate described in paragraph (e) of this section regarding a foreign trust or estate, then the rules of paragraph (e) of this section shall apply to determine who the payees are; and

(F) If the withholding agent cannot reliably associate the partner's distributive share with a withholding certificate or other appropriate documentation, the partners are considered to be the payees and the presumptions described in paragraph (d)(3) of this section shall apply to determine their classification and status.

(ii) *Payments treated as made to the partnership.* A payment to a person that the withholding agent may treat as a foreign partnership is treated as a payment to the foreign partnership and not to its partners only if—

(A) The withholding agent can reliably associate the payment with a withholding certificate described in paragraph (c)(2)(iv) of this section (withholding certificate of a withholding foreign partnership);

(B) The withholding agent can reliably associate the payment with a withholding certificate described in paragraph (c)(3)(iii) of this section (nonwithholding foreign partnership) certifying that the payment is income that is effectively connected with the conduct of a trade or business in the United States; or

(C) The withholding agent can treat the income as effectively connected income under the presumption rules of § 1.1441–4(a)(2)(ii) or (3)(i).

(iii) *Rules for reliably associating a payment with documentation.* For rules regarding the reliable association of a payment with documentation, see § 1.1441–1(b)(2)(vii). In the absence of documentation, see §§ 1.1441–1(b)(3) and 1.6049–5(d) and paragraphs (d) and (e)(6) of this section for applicable presumptions.

(iv) *Examples.* The rules of paragraphs (c)(1)(i) and (ii) of this section are illustrated by the following examples:

Example 1. FP is a nonwithholding foreign partnership organized in Country X. FP has two partners, FC, a foreign corporation, and USP, a U.S. partnership. USWH, a U.S. withholding agent, makes a payment of U.S. source interest to FP. FP has provided USWH with a valid nonwithholding foreign partnership certificate, as described in paragraph (c)(3)(iii) of this section, with which it associates a beneficial owner withholding certificate from FC and a Form W–9 from USP together with the withholding statement required by paragraph (c)(3)(iv) of this section. USWH can reliably associate the payment of interest with the withholding certificates from FC and USP. Under paragraph (c)(1)(i) of this section, the payees of the interest payment are FC and USP.

Example 2. The facts are the same as in *Example 1*, except that FP1, a nonwithholding foreign partnership, is a partner in FP rather than USP. FP1 has two partners, A and B, both foreign persons. FP provides USWH with a valid nonwithholding foreign partnership certificate, as described in paragraph (c)(3)(iii) of this section, with which it associates a beneficial owner

withholding certificate from FC and a nonwithholding foreign partnership certificate from FP1. In addition, foreign beneficial owner withholding certificates from A and B are associated with the nonwithholding foreign partnership withholding certificate from FP1. FP also provides the withholding statement required by paragraph (c)(3)(iv) of this section. USWH can reliably associate the interest payment with the withholding certificates provided by FC, A, and B. Therefore, under paragraph (c)(1)(i) of this section, the payees of the interest payment are FC, A, and B.

Example 3. USWH makes a payment of U.S. source dividends to WFP, a withholding foreign partnership. WFP has two partners, FC1 and FC2, both foreign corporations. USWH can reliably associate the payment with a valid withholding foreign partnership withholding certificate from WFP. Therefore, under paragraph (c)(1)(ii)(A) of this section, WFP is the payee of the dividends.

Example 4. USWH makes a payment of U.S. source royalties to FP, a foreign partnership. USWH can reliably associate the royalties with a valid withholding certificate from FP on which FP certifies that the income is effectively connected with the conduct of a trade or business in the United States. Therefore, under paragraph (c)(1)(ii)(B) of this section, FP is the payee of the royalties.

(2) *Withholding foreign partnerships*—(i) *Reliance on claim of withholding foreign partnership status.* A withholding foreign partnership is a foreign partnership that has entered into an agreement with the Internal Revenue Service (IRS), as described in paragraph (c)(2)(ii) of this section, with respect to distributions and guaranteed payments it makes to its partners. A withholding agent that can reliably associate a payment with a certificate described in paragraph (c)(2)(iv) of this section may treat the person to whom it makes the payment as a withholding foreign partnership for purposes of withholding under chapter 3 of the Internal Revenue Code, information reporting under chapter 61 of the Internal Revenue Code, backup withholding under section 3406, and withholding under other provisions of the Internal Revenue Code. Furnishing such a certificate is in lieu of transmitting to a withholding agent withholding certificates or other appropriate documentation for its partners. Although the withholding foreign partnership generally will be required to obtain withholding certificates or other appropriate documentation from its partners pursuant to its agreement with the IRS, it will generally not be required to attach such documentation to its withholding foreign partnership withholding certificate. A foreign partnership may act as a qualified intermediary under § 1.1441–1(e)(5) with respect to payments it makes to persons other than its partners. In addition, the IRS may permit a foreign partnership to act as a qualified intermediary under § 1.1441–1(e)(5)(ii)(D) with respect to its partners in appropriate circumstances.

(ii) *Withholding agreement.* The IRS may, upon request, enter into a withholding agreement with a foreign partnership pursuant to such procedures as the IRS may prescribe in published guidance (see § 601.601(d)(2) of this chapter). Under the withholding agreement, a foreign partnership shall generally be subject to the applicable withholding and reporting provisions applicable to withholding agents and payors under chapters 3 and 61 of the Internal Revenue Code, section 3406, the regulations under those provisions, and other withholding provisions of the Internal Revenue Code, except to the extent provided under the agreement. Under the agreement, a foreign partnership may agree to act as an acceptance agent to perform the duties described in § 301.6109–1(d)(3)(iv)(A) of this chapter. The agreement may specify the manner in which applicable procedures for adjustments for underwithholding and overwithholding, including refund procedures, apply to the withholding foreign partnership and its partners and the extent to which applicable procedures may be modified. In particular, a withholding agreement may allow a withholding foreign partnership to claim refunds of overwithheld amounts on behalf of its customers. In addition, the agreement must specify the manner in which the IRS will audit the foreign partnership's books and records in order to verify the partnership's compliance with its agreement. A withholding foreign partnership must file a return on Form 1042 and information returns on Form 1042–S. The withholding foreign partnership agreement may also require a withholding foreign partnership to file a partnership return under section 6031(a) and partner statements under 6031(b).

(iii) *Withholding responsibility.* A withholding foreign partnership must assume primary withholding responsibility under chapter 3 of the Internal Revenue Code. It is not required to provide information to the withholding agent regarding each partner's distributive share of the payment. The withholding foreign partnership will be responsible for reporting the payments under § 1.1461–1(c) and chapter 61 of the Internal Revenue Code. A withholding agent making a payment to a withholding foreign partnership is not required to withhold any amount under chapter 3 of the Internal Revenue Code on a payment to the withholding foreign partnership, unless it has actual knowledge or reason to know that the foreign partnership is not a withholding foreign partnership. The withholding foreign partnership shall withhold the payments under the same procedures and at the same time as prescribed for withholding by a U.S. partnership under paragraph (b)(2) of this section, except that, for purposes of determining the partner's status, the provisions of paragraph (d)(4) of this section shall apply.

(iv) *Withholding certificate from a withholding foreign partnership.* The rules of § 1.1441–1(e)(4) shall apply to withholding certificates described in this paragraph (c)(2)(iv). A withholding certificate furnished by a withholding foreign partnership is valid with regard to any partner on whose behalf the certificate is furnished only if it is furnished on a Form W–8, an acceptable substitute form, or such other form as the IRS may prescribe, it is signed under penalties of perjury by a partner with authority to sign for the partnership, its validity has not expired, and it contains the information, statement, and certifications described in this paragraph (c)(2)(iv) as follows—

(A) The name, permanent residence address (as described in § 1.1441–1(e)(2)(ii)), and the employer identification number of the partnership, and the country under the laws of which the partnership is created or governed;

(B) A certification that the partnership is a withholding foreign partnership within the meaning of paragraph (c)(2)(i) of this section; and

(C) Any other information, certifications or statements as may be required by the withholding foreign partnership agreement with the IRS or the form or accompanying instructions in addition to, or in lieu of, the information, statements, and certifications described in this paragraph (c)(2)(iv).

(3) *Nonwithholding foreign partnerships*—(i) *Reliance on claim of foreign partnership status.* A withholding agent may treat a person as a nonwithholding foreign partnership if it receives from that person a nonwithholding foreign partnership withholding certificate as described in paragraph (c)(3)(iii) of this section. A withholding agent that does not receive a nonwithholding foreign partnership withholding certificate, or does not receive a valid withholding certificate, from an entity it knows, or has reason to know, is a foreign partnership, must apply the presumption rules of §§ 1.1441–1(b)(3) and 1.6049–5(d) and

paragraphs (d) and (e)(6) of this section. In addition, to the extent a withholding agent cannot, prior to a payment, reliably associate the payment with valid documentation from a payee that is associated with the nonwithholding foreign partnership withholding certificate or has insufficient information to report the payment on Form 1042–S or Form 1099, to the extent reporting is required, must also apply the presumption rules. See § 1.1441–1(b)(2)(vii)(A) and (B) for rules regarding reliable association. See paragraph (c)(3)(iv) of this section and § 1.1441–1(e)(3)(iv) for alternative procedures permitting allocation information to be received after a payment is made.

(ii) *Reliance on claim of reduced withholding by a partnership for its partners.* This paragraph (c)(3)(ii) describes the manner in which a withholding agent may rely on a claim of reduced withholding when making a payment to a nonwithholding foreign partnership. To the extent that a withholding agent treats a payment to a nonwithholding foreign partnership as a payment to the nonwithholding foreign partnership's partners (whether direct or indirect) in accordance with paragraph (c)(1)(i) of this section, it may rely on a claim for reduced withholding by the partner if, prior to the payment, the withholding agent can reliably associate the payment (within the meaning of § 1.1441–1(b)(2)(vii)) with a valid withholding certificate or other appropriate documentation from the partner that establishes entitlement to a reduced rate of withholding. A withholding certificate or other appropriate documentation that establishes entitlement to a reduced rate of withholding is a beneficial owner withholding certificate described in § 1.1441–1(e)(2)(i), documentary evidence described in § 1.1441–6(c)(3) or (4) or 1.6049–5(c)(1) (for a partner claiming to be a foreign person and a beneficial owner, determined under the provisions of § 1.1441–1(c)(6)), a Form W–9 described in § 1.1441–1(d) (for a partner claiming to be a U.S. payee), or a withholding foreign partnership withholding certificate described in paragraph (c)(2)(iv) of this section. Unless a nonwithholding foreign partnership withholding certificate is provided for income claimed to be effectively connected with the conduct of a trade or business in the United States, a claim must be presented for each portion of the payment that represents an item of income includible in the distributive share of a partner as required under paragraph (c)(3)(iii)(C) of this section. When making a claim for several partners, the partnership may present a single nonwithholding foreign partnership withholding certificate to which the partners' certificates or other appropriate documentation are associated. Where the nonwithholding foreign partnership withholding certificate is provided for income claimed to be effectively connected with the conduct of a trade or business in the United States under paragraph (c)(3)(iii)(D) of this section, the claim may be presented without having to identify any partner's distributive share of the payment.

(iii) *Withholding certificate from a nonwithholding foreign partnership.* A nonwithholding foreign partnership shall provide a nonwithholding foreign partnership withholding certificate with respect to reportable amounts received by the nonwithholding foreign partnership. A nonwithholding foreign partnership withholding certificate is valid only to the extent it is furnished on a Form W–8 (or an acceptable substitute form or such other form as the IRS may prescribe), it is signed under penalties of perjury by a partner with authority to sign for the partnership, its validity has not expired, and it contains the information, statements, and certifications described in this paragraph (c)(3)(iii) and paragraph (c)(3)(iv) of this section, and the withholding certificates and other appropriate documentation for all the persons to whom the certificate relates are associated with the certificate. The rules of § 1.1441–1(e)(4) shall apply to withholding certificates described in this paragraph (c)(3)(iii). No withholding certificates or other appropriate documentation from persons who derive income through a partnership (whether or not U.S. exempt recipients) are required to be associated with the nonwithholding foreign partnership withholding certificate if the certificate is furnished solely for income claimed to be effectively connected with the conduct of a trade or business in the United States. Withholding certificates and other appropriate documentation that may be associated with the nonwithholding foreign partnership withholding certificate consist of beneficial owner withholding certificates under § 1.1441–1(e)(2)(i), intermediary withholding certificates under § 1.1441–1(e)(3)(i), withholding foreign partnership withholding certificates under paragraph (c)(2)(iv) of this section, nonwithholding foreign partnership withholding certificates under this paragraph (c)(3)(iii), withholding certificates from foreign trusts or estates under paragraph (e) of this section, documentary evidence described in § 1.1441–6(c)(3) or (4) or documentary evidence described in § 1.6049–5(c)(1), and any other documentation or certificates applicable under other provisions of the Internal Revenue Code or regulations that certify or establish the status of the payee or beneficial owner as a U.S. or a foreign person. Nothing in this paragraph (c)(3)(iii) shall require a nonwithholding foreign partnership to furnish original documentation. Copies of certificates or documentary evidence may be transmitted to the U.S. withholding agent, in which case the nonwithholding foreign partnership must retain the original documentation for the same time period that the copy is required to be retained by the withholding agent under § 1.1441–1(e)(4)(iii) and must provide it to the withholding agent upon request. The information, statement, and certifications required on the withholding certificate are as follows—

(A) The name, permanent residence address (as described in § 1.1441–1(e)(2)(ii)), and the employer identification number of the partnership, if any, and the country under the laws of which the partnership is created or governed;

(B) A certification that the person whose name is on the certificate is a foreign partnership;

(C) A withholding statement associated with the nonwithholding foreign partnership withholding certificate that provides all of the information required by paragraph (c)(3)(iv) of this section and § 1.1441–1(e)(3)(iv). No withholding statement is required, however, for a nonwithholding foreign partnership withholding certificate furnished for income claimed to be effectively connected with the conduct of a trade or business in the United States;

(D) A certification that the income is effectively connected with the conduct of a trade or business in the United States, if applicable; and

(E) Any other information, certifications, or statements required by the form or accompanying instructions in addition to, or in lieu of, the information and certifications described in this paragraph (c)(3)(iii).

(iv) *Withholding statement provided by nonwithholding foreign partnership.* The provisions of § 1.1441–1(e)(3)(iv) (regarding a withholding statement) shall apply to a nonwithholding foreign partnership by substituting the term nonwithholding foreign partnership for the term nonqualified intermediary.

(v) *Withholding and reporting by a foreign partnership.* A nonwithholding foreign partnership described in this paragraph (c)(3) that receives an amount subject to withholding (as defined in § 1.1441–2(a)) shall be required to withhold and report such payment under chapter 3 of the Internal Revenue Code and the regulations thereunder except as otherwise provided in this paragraph (c)(3)(v). A nonwithholding foreign partnership shall not be required to withhold and report if it has provided a valid nonwithholding foreign partnership withholding certificate, it has provided all of the information required by paragraph (c)(3)(iv) of this section (withholding statement), and it does not know, and has no reason to know, that another withholding agent failed to withhold the correct amount or failed to report the payment correctly under § 1.1461–1(c). A withholding foreign partnership's obligations to withhold and report shall be determined in accordance with its withholding foreign partnership agreement.

(d) *Presumption rules*—(1) *In general.* This paragraph (d) contains the applicable presumptions for a withholding agent (including a partnership) to determine the classification and status of a partnership and its partners in the absence of documentation. The provisions of § 1.1441–1(b)(3)(iv) (regarding the 90-day grace period) and § 1.1441–1(b)(3)(vii) through (ix) shall apply for purposes of this paragraph (d).

(2) *Determination of partnership status as U.S. or foreign in the absence of documentation.* In the absence of a valid representation of U.S. partnership status in accordance with paragraph (b)(1) of this section or of foreign partnership status in accordance with paragraph (c)(2)(i) or (3)(i) of this section, the withholding agent shall determine the classification of the payee under the presumptions set forth in § 1.1441–1(b)(3)(ii). If the withholding agent treats the payee as a partnership under § 1.1441–1(b)(3)(ii), the withholding agent shall presume the partnership to be a U.S. partnership unless there are indicia of foreign status. If there are indicia of foreign status, the withholding agent may presume the partnership to be foreign. Indicia of foreign status exist only if the withholding agent has actual knowledge of the payee's employer identification number and that number begins with the two digits ''98,'' the withholding agent's communications with the payee are mailed to an address in a foreign country, or the payment is made outside the United States (as defined in § 1.6049–5(e)). For rules regarding reliable association with a withholding certificate from a domestic or a foreign partnership, see § 1.1441–1(b)(2)(vii).

(3) *Determination of partners' status in the absence of certain documentation.* If a nonwithholding foreign partnership has provided a nonwithholding foreign partnership withholding certificate under paragraph (c)(3)(iii) of this section that would be valid except that the withholding agent cannot reliably associate all or a portion of the payment with valid documentation from a partner of the partnership, then the withholding agent may apply the presumption rule of this paragraph (d)(3) with respect to all or a portion of the payment for which documentation has not been received. See § 1.1441–1(b)(2)(vii)(A) and (B) for rules regarding reliable association. The presumption rule of this paragraph (d)(3) also applies to a person that is presumed to be a foreign partnership under the rule of paragraph (d)(2) of this section. Any portion of a payment that the withholding agent cannot treat as reliably associated with valid documentation from a partner may be presumed made to a foreign payee. As a result, any payment of an amount subject to withholding is subject to withholding at a rate of 30 percent. Any payment that is presumed to be made to an undocumented foreign payee must be reported on Form 1042–S. See § 1.1461–1(c).

(4) *Determination by a withholding foreign partnership of the status of its partners.* A withholding foreign partnership shall determine whether the partners or some other persons are the payees of the partners' distributive shares of any payment made by a withholding foreign partnership by applying the rules of § 1.1441–1(b)(2), paragraph (c)(1) of this section (in the case of a partner that is a foreign partnership), and paragraph (e)(3) of this section (in the case of a partner that is a foreign estate or a foreign trust). Further, the provisions of paragraph (d)(3) of this section shall apply to determine the status of partners and the applicable withholding rates to the extent that, at the time the foreign partnership is required to withhold on a payment, it cannot reliably associate the amount with documentation for any one or more of its partners.

(e) *Foreign trusts and estates*—(1) *In general.* This paragraph (e) provides rules applicable to payments of amounts subject to withholding (as defined in § 1.1441–2(a)) that a withholding agent may treat as made to any foreign trust or a foreign estate. For rules relating to payments to a U.S. trust or a U.S. estate, see paragraph (b) of this section. For the definitions of foreign simple trust, foreign complex trust, and foreign grantor trust, see § 1.1441–1(c)(24), (25), and (26).

(2) *Payments to foreign complex trusts and foreign estates.* Under § 1.1441–1(c)(6)(ii)(D), a foreign complex trust or foreign estate is generally considered to be the beneficial owner of income paid to the foreign complex trust or foreign estate. See paragraph (e)(4) of this section for rules describing when a withholding agent may treat a payment as made to a foreign complex trust or a foreign estate.

(3) *Payees of payments to foreign simple trusts and foreign grantor trusts*—(i) *Payments for which beneficiaries and owners are payees.* For purposes of the regulations under chapters 3 and 61 of the Internal Revenue Code and section 3406, a foreign simple trust is not a beneficial owner or a payee of a payment. Also, a foreign grantor trust (or a portion of a trust that is a foreign grantor trust) is not considered a beneficial owner or a payee of a payment. Except as otherwise provided in paragraph (e)(3)(ii) of this section, the payees of a payment made to a person that the withholding agent may treat as a foreign simple trust or a foreign grantor trust (or a portion of a trust that is a foreign grantor trust) are determined under the rules of this paragraph (e)(3)(i). The payees shall be treated as the beneficial owners if they may be so treated under § 1.1441–1(c)(6)(ii)(C) and they provide documentation supporting their status as the beneficial owners. The payees of a payment to a foreign simple trust or foreign grantor trust are determined as follows—

(A) If the withholding agent can reliably associate a payment with a valid Form W–9 provided under § 1.1441–1(d) from a beneficiary or owner of the foreign trust, then the beneficiary or owner is a U.S. payee;

(B) If the withholding agent can reliably associate a payment with a valid Form W–8, or other appropriate documentation, provided under § 1.1441–1(e)(1)(ii) from a beneficiary or owner of the foreign trust, then the beneficiary or owner is a payee that is a foreign beneficial owner;

(C) If the withholding agent can reliably associate a payment with a qualified intermediary withholding certificate under § 1.1441–1(e)(3)(ii), a nonqualified intermediary withholding certificate under § 1.1441–1(e)(3)(ii), or a U.S. branch withholding certificate under § 1.1441–1(e)(3)(v), then the rules of § 1.1441–1(b)(2)(v) shall apply to determine the payee in the same manner

as if the payment had been paid directly to such intermediary or U.S. branch;

(D) If the withholding agent can reliably associate a payment with a withholding foreign partnership withholding certificate under paragraph (c)(2)(iv) of this section or a nonwithholding foreign partnership withholding certificate under paragraph (c)(3)(iii) of this section, then the rules of paragraph (c)(1)(i) or (ii) of this section shall apply to determine the payee;

(E) If the withholding agent can reliably associate the payment with a foreign simple trust withholding certificate or a foreign grantor trust withholding certificate (both described in paragraph (e)(5)(iii) of this section) from a second or higher-tier foreign simple trust or foreign grantor trust, then the rules of this paragraph (e)(3)(i) or paragraph (e)(3)(ii) of this section shall apply to determine whether the payment is treated as made to a beneficiary or owner of the higher-tier trust or to the trust itself in the same manner as if the payment had been made directly to the higher-tier trust; and

(F) If the withholding agent cannot reliably associate a payment with a withholding certificate or other appropriate documentation, the payees shall be determined by applying the presumptions described in paragraph (e)(6) of this section.

(ii) *Payments for which trust is payee.* A payment to a person that the withholding agent may treat as made to a foreign trust under paragraph (e)(5)(iii) of this section is treated as a payment to the trust, and not to a beneficiary of the trust, only if—

(A) The withholding agent can reliably associate the payment with a foreign complex trust withholding certificate under paragraph (e)(4) of this section;

(B) The withholding agent can reliably associate the payment with a foreign simple trust withholding certificate under paragraph (e)(5)(iii) of this section certifying that the payment is income that is treated as effectively connected with the conduct of a trade or business in the United States; or

(C) The withholding agent can treat the income as effectively connected income under the presumption rules of § 1.1441–4(a)(3)(i).

(4) *Reliance on claim of foreign complex trust or foreign estate status.* A withholding agent may treat a payment as made to a foreign complex trust or a foreign estate if the withholding agent can reliably associate the payment with a beneficial owner withholding certificate described in § 1.1441–1(e)(2)(i) or other documentary evidence under § 1.1441–6(c)(3) or (4) (regarding a claim for treaty benefits) or § 1.6049–5(c)(1) (regarding documentary evidence to establish foreign status for purposes of chapter 61 of the Internal Revenue Code) that establishes the foreign complex trust or foreign estate's status as a beneficial owner. See paragraph (e)(6) of this section for presumption rules if documentation is lacking.

(5) *Foreign simple trust and foreign grantor trust*—(i) *Reliance on claim of foreign simple trust or foreign grantor trust status.* A withholding agent may treat a person as a foreign simple trust or foreign grantor trust if it receives from that person a foreign simple trust or foreign grantor trust withholding certificate as described in paragraph (e)(5)(iii) of this section. A withholding agent must apply the presumption rules of §§ 1.1441–1(b)(3) and 1.6049–5(d) and paragraphs (d) and (e)(6) of this section to the extent it cannot, prior to the payment, reliably associate a payment (within the meaning of § 1.1441–1(b)(2)(vii)) with a valid foreign simple trust or foreign grantor trust withholding certificate, it cannot reliably determine how much of the payment relates to valid documentation provided by a payee (*e.g.*, a person that is not itself a nonqualified intermediary, flow-through entity, or U.S. branch) associated with the foreign simple trust or foreign grantor trust withholding certificate, or it does not have sufficient information to report the payment on Form 1042–S or Form 1099, if reporting is required. See § 1.1441–1(b)(2)(vii)(A) and (B).

(ii) Reliance on claim of reduced withholding by a foreign simple trust or foreign grantor trust for its beneficiaries or owners. This paragraph (e)(5)(ii) describes the manner in which a withholding agent may rely on a claim of reduced withholding when making a payment to a foreign simple trust or foreign grantor trust. To the extent that a withholding agent treats a payment to a foreign simple trust or foreign grantor trust as a payment to payees other than the trust in accordance with paragraph (e)(3)(i) of this section, it may rely on a claim for reduced withholding by a beneficiary or owner if, prior to the payment, the withholding agent can reliably associate the payment (within the meaning of § 1.1441–1(b)(2)(vii)) with a valid withholding certificate or other appropriate documentation from a payee or beneficial owner that establishes entitlement to a reduced rate of withholding. A withholding certificate or other appropriate documentation that establishes entitlement to a reduced rate of withholding is a beneficial owner withholding certificate described in § 1.1441–1(e)(2)(i) or documentary evidence described in § 1.1441–6(c)(3) or(4) or in § 1.6049–5(c)(1) (for a beneficiary or owner claiming to be a foreign person and a beneficial owner, determined under the provisions of § 1.1441–1(c)(6)), a Form W–9 described in § 1.1441–1(d) (for a beneficiary or owner claiming to be a U.S. payee), or a withholding foreign partnership withholding certificate described in paragraph (c)(2)(iv) of this section. Unless a foreign simple trust or foreign grantor trust withholding certificate is provided for income treated as income effectively connected with the conduct of a trade or business in the United States, a claim must be presented for each payee's portion of the payment. When making a claim for several payees, the trust may present a single foreign simple trust or foreign grantor trust withholding certificate with which the payees' certificates or other appropriate documentation are associated. Where the foreign simple trust or foreign grantor trust withholding certificate is provided for income that is treated as effectively connected with the conduct of a trade or business in the United States under paragraph (e)(5)(iii)(D) of this section, the claim may be presented without having to identify any partner's distributive share of the payment.

(iii) *Withholding certificate from foreign simple trust or foreign grantor trust.* A withholding certificate furnished by a foreign simple trust or a foreign grantor trust that is not a withholding foreign trust (within the meaning of paragraph (e)(5)(v) of this section) is valid only if it is furnished on a Form W–8, an acceptable substitute form, or such other form as the IRS may prescribe, it is signed under penalties of perjury by a trustee, its validity has not expired, it contains the information, statements, and certifications required by this paragraph (e)(5)(iii) and § 1.1441–1(e)(3)(iv), and the withholding certificates or other appropriate documentation for all of the payees (as determined under paragraph (e)(3)(i) of this section) to whom the certificate relates are associated with the foreign simple trust or foreign grantor trust withholding certificate. The rules of § 1.1441–1(e)(4) shall apply to withholding certificates described in this paragraph (e)(5)(iii). No withholding certificates or other appropriate documentation from persons who derive income through a foreign simple trust or a foreign grantor trust (whether or not U.S. exempt

recipients) are required to be associated with the foreign simple trust or foreign grantor trust withholding certificate if the certificate is furnished solely for income that is treated as effectively connected with the conduct of a trade or business in the United States. Withholding certificates and other appropriate documentation (as determined under paragraph (e)(3)(i) of this section) that may be associated with a foreign simple trust or foreign grantor trust withholding certificate consist of beneficial owner withholding certificates under § 1.1441–1(e)(2)(i), intermediary withholding certificates under § 1.1441–1(e)(3)(i), withholding foreign partnership withholding certificates under paragraph (c)(2)(iv) of this section, nonwithholding foreign partnership withholding certificates under paragraph (c)(3)(iii) of this section, withholding certificates from foreign trusts or estates under paragraph (e)(4) or (5)(iii) of this section, documentary evidence described in §§ 1.1441–6(c)(3) or (4), or 1.6049–5(c)(1), and any other documentation or certificates applicable under other provisions of the Internal Revenue Code or regulations that certify or establish the status of the payee or beneficial owner as a U.S. or a foreign person. Nothing in this paragraph (e)(5)(iii) shall require a foreign simple trust or foreign grantor trust to provide original documentation. Copies of certificates or documentary evidence may be passed up to the U.S. withholding agent, in which case the foreign simple trust or foreign grantor trust must retain the original documentation for the same time period that the copy is required to be retained by the withholding agent under § 1.1441–1(e)(4)(iii) and must provide it to the withholding agent upon request. The information, statement, and certifications required on a foreign simple trust or foreign grantor trust withholding certificate are as follows—

(A) The name, permanent residence address (as described in § 1.1441–1(e)(2)(ii)), and the employer identification number, if required, of the trust and the country under the laws of which the trust is created;

(B) A certification that the person whose name is on the certificate is a foreign simple trust or a foreign grantor trust;

(C) A withholding statement associated with the foreign simple trust or foreign grantor trust withholding certificate that provides all of the information required by paragraph (e)(5)(iv) of this section. No withholding statement is required, however, for a foreign simple trust withholding certificate furnished for income that is treated as effectively connected with the conduct of a trade or business in the United States;

(D) A certification on a foreign simple trust withholding certificate that the income is treated as effectively connected with the conduct of a trade or business in the United States, if applicable; and

(E) Any other information, certifications, or statements required by the form or accompanying instructions in addition to, or in lieu of, the information, certifications, and statements described in this paragraph (e)(5)(iii);

(iv) *Withholding statement provided by a foreign simple trust or foreign grantor trust.* The provisions of § 1.1441–1(e)(3)(iv) (regarding a withholding statement) shall apply to a foreign simple trust or foreign grantor trust by substituting the term foreign simple trust or foreign grantor trust for the term nonqualified intermediary.

(v) *Withholding foreign trusts.* The IRS may enter an agreement with a foreign trust to treat the trust or estate as a withholding foreign trust. Such an agreement shall generally follow the same principles as an agreement with a withholding foreign partnership under paragraph (c)(2)(ii) of this section. A withholding agent may treat a payment to a withholding foreign trust in the same manner the withholding agent would treat a payment to a withholding foreign partnership. The IRS may also enter an agreement to treat a trust as a qualified intermediary in appropriate circumstances. See § 1.1441–1(e)(5)(ii)(D).

(6) *Presumption rules*—(i) *In general.* This paragraph (e)(6) contains the applicable presumptions for a withholding agent (including a trust or estate) to determine the classification and status of a trust or estate and its beneficiaries or owners in the absence of valid documentation. The provisions of § 1.1441–1(b)(3)(iv) (regarding the 90-day grace period) and § 1.1441–1(b)(3)(vii) through (ix) shall apply for purposes of this paragraph (e)(6).

(ii) *Determination of status as U.S. or foreign trust or estate in the absence of documentation.* In the absence of valid documentation that establishes the U.S. status of a trust or estate under paragraph (b)(1) of this section and of documentation that establishes the foreign status of a trust or estate under paragraph (e)(4) or (5)(iii) of this section, the withholding agent shall determine the classification of the payee based upon the presumptions set forth in § 1.1441–1(b)(3)(ii). If, based upon those presumptions, the withholding agent classifies the payee as a trust or estate, the trust or estate shall be presumed to be a U.S. trust or U.S. estate unless there are indicia of foreign status, in which case the trust or estate shall be presumed to be foreign. Indicia of foreign status exists if the withholding agent has actual knowledge of the payee's employer identification number and that number begins with the two digits ''98,'' the withholding agent's communications with the payee are mailed to an address in a foreign country, or the payment is made outside the United States (as defined in § 1.6049–5(e)). If an undocumented payee is presumed to be a foreign trust it shall be presumed to be a foreign complex trust. If a withholding agent has documentary evidence that establishes that an entity is a foreign trust, but the withholding agent cannot determine whether the foreign trust is a complex trust, a simple trust, or foreign grantor trust, the withholding agent may presume that the trust is a foreign complex trust.

(iii) *Determination of beneficiary or owner's status in the absence of certain documentation.* If a foreign simple trust or foreign grantor trust has provided a foreign simple trust or foreign grantor trust withholding certificate under paragraph (e)(5)(iii) of this section but the payment to such trust cannot be reliably associated with valid documentation from a specific beneficiary or owner of the trust, then any portion of a payment that a withholding agent cannot treat as reliably associated with valid documentation from a beneficiary or owner may be presumed made to a foreign payee. As a result, any payment of an amount subject to withholding is subject to withholding at a rate of 30 percent. Any such payment that is presumed to be made to an undocumented foreign person must be reported on Form 1042–S. See § 1.1461–1(c).

* * * * *

Par. 8. Effective January 1, 2001, § 1.1441–6 is amended by:

1. Revising paragraphs (b)(1), (b)(2), and (b)(3).
2. Removing paragraph (b)(4) and redesignating paragraph (b)(5) as new paragraph (b)(4).
3. Revising paragraphs (c) and (e).

The revisions read as follows:

§ 1.1441–6 Claim of reduced withholding under an income tax treaty.

* * * * *

(b) *Reliance on claim of reduced withholding under an income tax treaty*—(1) *In general.* The withholding imposed under section 1441, 1442, or

1443 on any payment to a foreign person is eligible for reduction under the terms of an income tax treaty only to the extent that such payment is treated as derived by a resident of an applicable treaty jurisdiction, such resident is a beneficial owner, and all other requirements for benefits under the treaty are satisfied. See section 894 and the regulations thereunder to determine whether a resident of a treaty country derives the income. Absent actual knowledge or reason to know otherwise, a withholding agent may rely on a claim that a beneficial owner is entitled to a reduced rate of withholding based upon an income tax treaty if, prior to the payment, the withholding agent can reliably associate the payment with a beneficial owner withholding certificate, described in § 1.1441–1(e)(2), that contains the information necessary to support the claim, or, in the case of a payment of income described in paragraph (c)(2) of this section made outside the United States with respect to an offshore account, documentary evidence described in paragraphs (c)(3), (4) and (5) of this section. See §§ 1.6049–5(e) for the definition of payments made outside the United States and 1.6049–5(c)(1) for the definition of offshore account. For purposes of this paragraph (b)(1), a beneficial owner withholding certificate described in § 1.1441–1(e)(2)(i) contains information necessary to support the claim for a treaty benefit only if it includes the beneficial owner's taxpayer identifying number (except as otherwise provided in paragraph (c)(1) of this section) and the representations that the beneficial owner derives the income under section 894 and the regulations thereunder, if required, and meets the limitation on benefits provisions of the treaty, if any. The withholding certificate must also contain any other representations required by this section and any other information, certifications, or statements as may be required by the form or accompanying instructions in addition to, or in place of, the information and certifications described in this section. Absent actual knowledge or reason to know that the claims are incorrect (and subject to the standards of knowledge in § 1.1441–7(b)), a withholding agent may rely on the claims made on a withholding certificate or on documentary evidence. A withholding agent may also rely on the information contained in a withholding statement provided under §§ 1.1441–1(e)(3)(iv) and 1.1441–5(c)(3)(iv) and (e)(5)(iv) to determine whether the appropriate statements regarding section 894 and limitation on benefits have been provided in connection with documentary evidence. If the beneficial owner is a person related to the withholding agent within the meaning of section 482, the withholding certificate must also contain a representation that the beneficial owner will file the statement required under § 301.6114–1(d) of this chapter (if applicable). The requirement to file an information statement under section 6114 for income subject to withholding applies only to amounts received during the calendar year that, in the aggregate, exceed $500,000. See § 301.6114–1(d) of this chapter. The Internal Revenue Service (IRS) may apply the provisions of § 1.1441–1(e)(1)(ii)(B) to notify the withholding agent that the certificate cannot be relied upon to grant benefits under an income tax treaty. See § 1.1441–1(e)(4)(viii) regarding reliance on a withholding certificate by a withholding agent. The provisions of § 1.1441–1(b)(3)(iv) dealing with a 90-day grace period shall apply for purposes of this section.

(2) *Payment to fiscally transparent entity*—(i) *In general.* If the person claiming a reduced rate of withholding under an income tax treaty is the interest holder of an entity that is considered to be fiscally transparent (as defined in the regulations under section 894) by the interest holder's jurisdiction with respect to an item of income, then, with respect to such income derived by that person through the entity, the entity shall be treated as a flow-through entity and may provide a flow-through withholding certificate with which the withholding certificate or other documentary evidence of the interest holder that supports the claim for treaty benefits is associated. For purposes of the preceding sentence, interest holders do not include any direct or indirect interest holders that are themselves treated as fiscally transparent entities with respect to that income by the interest holder's jurisdiction. See § 1.1441–1(c)(23) and (e)(3)(i) for the definition of flow-through entity and flow-through withholding certificate. The entity may provide a beneficial owner withholding certificate, or beneficial owner documentation, with respect to any remaining portion of the income to the extent the entity is receiving income and is not treated as fiscally transparent by its own jurisdiction. Further, the entity may claim a reduced rate of withholding with respect to the portion of a payment for which it is not treated as fiscally transparent if it meets all the requirements to make such a claim and, in the case of treaty benefits, it provides the documentation required by paragraph (b)(1) of this section. If dual claims, as described in paragraph (b)(2)(iii) of this section, are made, multiple withholding certificates may have to be furnished. Multiple withholding certificates may also have to be furnished if the entity receives income for which a reduction of withholding is claimed under a provision of the Internal Revenue Code (*e.g.*, portfolio interest) and income for which a reduction of withholding is claimed under an income tax treaty.

(ii) *Certification by qualified intermediary.* Notwithstanding paragraph (b)(2)(i) of this section, a foreign entity that is fiscally transparent, as defined in the regulations under section 894, that is also a qualified intermediary for purposes of claiming a reduced rate of withholding under an income tax treaty for its interest holders (who are deriving the income paid to the entity as residents of an applicable treaty jurisdiction) may furnish a single qualified intermediary withholding certificate, as described in § 1.1441–1(e)(3)(ii), for amounts for which it claims a reduced rate of withholding under an income tax treaty on behalf of its interest holders.

(iii) *Dual treatment.* Under paragraph (b)(2)(i) of this section, a withholding agent may make a payment to a foreign entity that is simultaneously claiming to be the beneficial owner of a portion of the income (whether or not it is also claiming a reduced rate of tax on its own behalf) and a reduced rate on behalf of persons in their capacity as interest holders in the entity with respect to the same, or a different, portion of the income. If the same portion of a payment may be reliably associated with both the entity's claim and an interest holder's claim, the withholding agent may choose to reject both claims and request new documentation and information allocating the payment among the beneficial owners of the payment or the withholding agent may choose which claim to apply. If the entity and the interest holder's claims are reliably associated with separate portions of the payment, the withholding agent may, at its option, accept such dual claims based on withholding certificates or other appropriate documentation furnished by the entity and its interest holders with respect to their respective shares of the payment even though this will result in the withholding agent treating the entity differently with respect to different portions of the same payment. Alternatively, the withholding agent may choose to apply only the

claim made by the entity, provided the entity may be treated as a beneficial owner of the income. If the withholding agent does not accept claims for a reduced rate of withholding presented by any one or more of the interest holders, or by the entity, any interest holder or the entity may subsequently claim a refund or credit of any amount so withheld to the extent the interest holder's or entity's share of such withholding exceeds the amount of tax due.

(iv) *Examples.* The following examples illustrate the rules of this paragraph (b)(2):

Example 1. (i) *Facts.* Entity E is a business organization formed under the laws of country Y. Country Y has an income tax treaty with the United States. The treaty contains a limitation on benefits provision. E receives U.S. source royalties from withholding agent W and claims a reduced rate of withholding under the U.S.-Y tax treaty on its own behalf (rather than on behalf of its interest holders). E furnishes a beneficial owner withholding certificate described in paragraph (b)(1) of this section that represents that E is a resident of country Y (within the meaning of the U.S.-Y tax treaty), is the beneficial owner of the income, derives the income under section 894 and the regulations thereunder, and is not precluded from claiming benefits by the treaty's limitation on benefits provision.

(ii) *Analysis.* Absent actual knowledge or reason to know otherwise, W may rely on the representations made by E to apply a reduced rate of withholding.

Example 2. (i) *Facts.* The facts are the same as under *Example 1,* except that one of E's interest holders, H, is an entity organized in country Z. The U.S.-Z tax treaty reduces the rate on royalties to zero whereas the rate on royalties under the U.S.-Y tax treaty applicable to E is 5 percent. H is not fiscally transparent under country Z's tax law with respect to such income. H furnishes a beneficial owner withholding certificate to E that represents that H derives, within the meaning of section 894 and the regulations thereunder, its share of the royalty income paid to E as a resident of country Z, is the beneficial owner of the royalty income, and is not precluded from claiming treaty benefits by virtue of the limitation on benefits provision in the U.S.-Z treaty. E furnishes to W a flow-through withholding certificate described in § 1.1441–1(e)(3)(i) to which it attaches H's beneficial owner withholding certificate and a withholding statement for the portion of the payment that H claims as its distributive share of the royalty income. E also furnishes to W a beneficial owner withholding certificate for itself for the portion of the payment that H does not claim as its distributive share.

(ii) *Analysis.* Absent actual knowledge or reason to know otherwise, W may rely on the documentation furnished by E to treat the royalty payment to a single foreign entity (E) as derived by different residents of tax treaty countries as a result of the claims presented under different treaties. W may, at its option, grant dual treatment, that is, a reduced rate of zero percent under the U.S.-Z treaty on the portion of the royalty payment that H claims to derive as a resident of country Z and a reduced rate of 5 percent under the U.S.-Y treaty for the balance. However, under paragraph (b)(2)(iii) of this section, W may, at its option, treat E as the only relevant person deriving the royalty and grant benefits under the U.S.-Y treaty only.

Example 3. (i) Facts. E is a business organization formed under the laws of country X. Country X has an income tax treaty with the United States. E has two interest holders, H1, organized in country Y, and H2, organized in country Z. E receives from W, a U.S. withholding agent, U.S. source royalties and interest that is eligible for the portfolio interest exception under sections 871(h) and 881(c), provided W receives the appropriate beneficial owner statement required under section 871(h)(5). E is classified as a corporation under U.S. tax law principles. Country X, E's country of organization, treats E as an entity that is not fiscally transparent with respect to items of income under the regulations under section 894. Under the U.S.-X income tax treaty, royalties are subject to 5 percent rate of withholding. Country Y, H1's country of organization, treats E as fiscally transparent with respect to items of income under section 894 and H1 as not fiscally transparent with respect to items of income. Under the country Y-U.S. income tax treaty, royalties are exempt from U.S. tax. Country Z, H2's country of organization, treats E as not fiscally transparent under section 894 with respect to items of income. E provides W with a flow-through beneficial owner withholding certificate with which it associates a beneficial owner withholding certificate from H1. H1's withholding certificate states that H1 is a resident of country Y, derives the royalty income under section 894, meets the applicable limitations on benefits provisions of the U.S.-Y treaty, and is the beneficial owner of the income. The withholding statement attached to E's flow-through withholding certificate allocates one-half of the royalty payment to H1. E also provides W with a beneficial owner withholding certificate for the interest income and the remaining one-half of the royalty income. The withholding certificate states that E is a resident of country X, derives the royalty income under section 894, meets the limitation on benefits provisions of the U.S.-X treaty, and is the beneficial owner of the income.

(ii) *Analysis.* Absent actual knowledge or reason to know that the claims are incorrect, W may treat one-half of the royalty derived by E as subject to a 5 percent withholding rate and one-half of the royalty as derived by H1 and subject to no withholding. Further, it may treat all of the interest as being paid to E and as qualifying for the portfolio interest exception. W can, at its option, treat the entire royalty as paid to E and subject it to withholding at a 5 percent rate of withholding. In that case, H1 would be entitled to claim a refund with respect to its one-half of the royalty.

(3) *Certified TIN.* The IRS may issue guidance requiring a foreign person claiming treaty benefits and for whom a TIN is required to establish with the IRS, at the time the TIN is requested or after the TIN is issued, that the person is a resident in a treaty country and meets other conditions (such as limitation on benefits provisions) of the treaty. See § 601.601(d)(2) of this chapter.

* * * * *

(c) *Exemption from requirement to furnish a taxpayer identifying number and special documentary evidence rules for certain income*—(1) *General rule.* In the case of income described in paragraph (c)(2) of this section, a withholding agent may rely on a beneficial owner withholding certificate described in paragraph (b)(1) of this section without regard to the requirement that the withholding certificate include the beneficial owner's taxpayer identifying number. In the case of payments of income described in paragraph (c)(2) of this section made outside the United States (as defined in § 1.6049–5(e)) with respect to an offshore account (as defined in § 1.6049–5(c)(1)), a withholding agent may, as an alternative to a withholding certificate described in paragraph (b)(1) of this section, rely on a certificate of residence described in paragraph (c)(3) of this section or documentary evidence described in paragraph (c)(4) of this section, relating to the beneficial owner, that the withholding agent has reviewed and maintains in its records in accordance with § 1.1441-1(e)(4)(iii). In the case of a payment to a person other than an individual, the certificate of residence or documentary evidence must be accompanied by the statements described in paragraphs (c)(5)(i) and (ii) of this section regarding limitation on benefits and whether the amount paid is derived by such person or by one of its interest holders. The withholding agent maintains the reviewed documents by retaining either the documents viewed or a photocopy thereof and noting in its records the date on which, and by whom, the documents were received and reviewed. This paragraph (c)(1) shall not apply to amounts that are exempt from withholding based on a claim that the income is effectively connected with the conduct of a trade or business in the United States.

(2) *Income to which special rules apply.* The income to which paragraph (c)(1) of this section applies is dividends and interest from stocks and debt obligations that are actively traded, dividends from any redeemable security issued by an investment company registered under the Investment Company Act of 1940 (15 U.S.C. 80a–1),

dividends, interest, or royalties from units of beneficial interest in a unit investment trust that are (or were upon issuance) publicly offered and are registered with the Securities and Exchange Commission under the Securities Act of 1933 (15 U.S.C. 77a) and amounts paid with respect to loans of securities described in this paragraph (c)(2). For purposes of this paragraph (c)(2), a stock or debt obligation is actively traded if it is actively traded within the meaning of section 1092(d) and § 1.1092(d)–1 when documentation is provided.

(3) *Certificate of residence.* A certificate of residence referred to in paragraph (c)(1) of this section is a certification issued by an appropriate tax official of the treaty country of which the taxpayer claims to be a resident that the taxpayer has filed its most recent income tax return as a resident of that country (within the meaning of the applicable tax treaty). The certificate of residence must have been issued by such official within three years prior to its being presented to the withholding agent, or such other period as the IRS may prescribe in published guidance (see § 601.601(d)(2) of this chapter). See § 1.1441–1(e)(4)(ii)(A) for the period during which a withholding agent may rely on a certificate of residence. The competent authorities may agree to a different procedure for certifying residence, in which case such procedure shall govern for payments made to a person claiming to be a resident of the country with which such an agreement is in effect.

(4) *Documentary evidence establishing residence in the treaty country*—(i) *Individuals.* For an individual, the documentary evidence referred to in paragraph (c)(1) of this section is any documentation that includes the individuals name, address, and photograph, is an official document issued by an authorized governmental body (*i.e.,* a government or agency thereof, or a municipality), and has been issued no more than three years prior to presentation to the withholding agent. A document older than three years may be relied upon as proof of residence only if it is accompanied by additional evidence of the person's residence in the treaty country (*e.g.,* a bank statement, utility bills, or medical bills). Documentary evidence must be in the form of original documents or certified copies thereof.

(ii) *Persons other than individuals.* For a person other than an individual, the documentary evidence referred to in paragraph (c)(1) of this section is any documentation that includes the name of the entity and the address of its principal office in the treaty country, and is an official document issued by an authorized governmental body (*e.g.,* a government or agency thereof, or a municipality).

(5) *Statements regarding entitlement to treaty benefits*—(i) *Statement regarding conditions under a limitation on benefits provision.* In addition to the documentary evidence described in (c)(4)(ii) of this section, a taxpayer that is not an individual must provide a statement that it meets one or more of the conditions set forth in the limitation on benefits article (if any, or in a similar provision) contained in the applicable tax treaty.

(ii) *Statement regarding whether the taxpayer derives the income.* A taxpayer that is not an individual must also provide, in addition to the documentary evidence and the statement described in paragraph (c)(5)(i) of this section, a statement that any income for which it intends to claim benefits under an applicable income tax treaty is income that will properly be treated as derived by itself as a resident of the applicable treaty jurisdiction within the meaning of section 894 and the regulations thereunder. This requirement does not apply if the taxpayer furnishes a certificate of residence that certifies that fact.

* * * * *

(e) *Competent authority.* The procedures described in this section may be modified to the extent the U.S. competent authority may agree with the competent authority of a country with which the United States has an income tax treaty in effect.

* * * * *

Par. 9. Effective January 1, 2001, § 1.1441–7 is amended by:

1. Revising paragraphs (a), (b)(2) and (b)(3).

2. Adding paragraphs (b)(4) through (b)(11).

The revisions and additions read as follows:

§ 1.1441–7 General provisions relating to withholding agents.

(a) *Withholding agent defined*—(1) *In general.* For purposes of chapter 3 of the Internal Revenue Code and the regulations under such chapter, the term *withholding agent* means any person, U.S. or foreign, that has the control, receipt, custody, disposal, or payment of an item of income of a foreign person subject to withholding, including (but not limited to) a foreign intermediary described in § 1.1441–1(e)(3)(i), a foreign partnership, or a U.S. branch described in § 1.1441–1(b)(2)(iv)(A) or (E). See §§ 1.1441–1(b)(2) and (3) and 1.1441–5(c), (d), and (e), for rules to determine whether a payment is considered made to a foreign person. Any person who meets the definition of a withholding agent is required to deposit any tax withheld under § 1.1461–1(a) and to make the returns prescribed by § 1.1461–1(b) and (c), except as otherwise may be required by a qualified intermediary withholding agreement, a withholding foreign partnership agreement, or a withholding foreign trust agreement. When several persons qualify as withholding agents with respect to a single payment, only one tax is required to be withheld and deposited. See § 1.1461–1. A person who, as a nominee described in § 1.6031(c)–1T, has furnished to a partnership all of the information required to be furnished under § 1.6031(c)–1T(a) shall not be treated as a withholding agent if it has notified the partnership that it is treating the provision of information to the partnership as a discharge of its obligations as a withholding agent.

(2) *Examples.* The following examples illustrate the rules of paragraph (a)(1) of this section:

Example 1. USB is a broker organized in the United States. USB pays U.S. source dividends and interest, which are amounts subject to withholding under § 1.1441–2(a), to FC, a foreign corporation that has an investment account with USB. USB is a withholding agent as defined in paragraph (a)(1) of this section.

Example 2. USB is a bank organized in the United States. FB is a bank organized in country X. X has an omnibus account with USB through which FB invests in debt and equity instruments that pay amounts subject to withholding as defined in § 1.1441–2(a). FB is a nonqualified intermediary, as defined in § 1.1441–1(c)(14). Both USB and FB are withholding agents as defined in paragraph (a)(1) of this section.

Example 3. The facts are the same as in Example 2, except that FB is a qualified intermediary. Both USB and FB are withholding agents as defined in paragraph (a)(1) of this section.

Example 4. FB is a bank organized in country X. FB has a branch in the United States. FB's branch has customers that are foreign persons who receive amounts subject to withholding, as defined in § 1.1441–2(a). FB is a withholding agent under paragraph (a)(1) of this section and is required to withhold and report payments of amounts subject to withholding in accordance with chapter 3 of the Internal Revenue Code.

Example 5. X is a foreign corporation. X pays dividends to shareholders who are foreign persons. Under section 861(a)(2)(B), a portion of the dividends are from sources within the United States and constitute amounts subject to withholding within the meaning of § 1.1441–2(a). The dividends are not subject to tax under section 884(a). See 884(e)(3). X is a withholding agent under paragraph (a)(1) of this section.

(b) * * *

(2) *Reason to know.* A withholding agent shall be considered to have reason to know if its knowledge of relevant facts or of statements contained in the withholding certificates or other documentation is such that a reasonably prudent person in the position of the withholding agent would question the claims made.

(3) *Financial institutions—limits on reason to know.* For purposes of this paragraph (b)(3) and paragraphs (b)(4) through (b)(10) of this section, the terms *withholding certificate, documentary evidence,* and *documentation* are defined in § 1.1441–1(c)(16), (17) and (18). Except as otherwise provided in paragraphs (b)(4) through (b)(9) of this section, a withholding agent that is a financial institution (including a regulated investment company) that has a direct account relationship with a beneficial owner (a direct account holder) has a reason to know, with respect to amounts described in § 1.1441–6(c)(2), that documentation provided by the direct account holder is unreliable or incorrect only if one or more of the circumstances described in paragraphs (b)(4) through (b)(9) of this section exist. If a direct account holder has provided documentation that is unreliable or incorrect under the rules of paragraph (b)(4) through (b)(9) of this section, the withholding agent may require new documentation. Alternatively, the withholding agent may rely on the documentation originally provided if the rules of paragraphs (b)(4) through (b)(9) of this section permit such reliance based on additional statements and documentation. Paragraph (b)(10) of this section provides limits on reason to know for financial institutions that receive beneficial owner documentation from persons (indirect account holders) that have an account relationship with, or an ownership interest in, a direct account holder. For rules regarding reliance on Form W–9, see § 31.3406(g)-3(e)(2) of this chapter.

(4) *Rules applicable to withholding certificates*—(i) *In general.* A withholding agent has reason to know that a beneficial owner withholding certificate provided by a direct account holder in connection with a payment of an amount described in § 1.1441–6(c)(2) is unreliable or incorrect if the withholding certificate is incomplete with respect to any item on the certificate that is relevant to the claims made by the direct account holder, the withholding certificate contains any information that is inconsistent with the direct account holder's claim, the withholding agent has other account information that is inconsistent with the direct account holder's claim, or the withholding certificate lacks information necessary to establish entitlement to a reduced rate of withholding. A withholding agent shall also treat a withholding certificate as unreliable or incorrect if the name of the person on the withholding certificate indicates that the person is a corporation, partnership, trust, estate, or an individual, and the person's claim of classification (e.g. individual, partnership, corporation) is not consistent with such indication and a difference in classification would result in a different rate of withholding or a difference in the person or persons to whom the payment is reported under § 1.1461–1(c) of chapter 61 of the Internal Revenue Code. For purposes of establishing a direct account holder's status as a foreign person or resident of a treaty country a withholding certificate shall be considered unreliable or inconsistent with an account holder's claims only if it is not reliable under the rules of paragraph (b)(5) and (6) of this section. A withholding agent that relies on an agent to review and maintain a withholding certificate is considered to know or have reason to know the facts within the knowledge of the agent.

(ii) *Examples.* The rules of paragraph (b)(4) of this section are illustrated by the following examples:

Example 1. F, a foreign person that has a direct account relationship with USB, a bank that is a U.S. person, provides USB with a beneficial owner withholding certificate for the purpose of claiming a reduced rate of withholding on U.S. source dividends. F resides in a treaty country that has a limitation on benefits provision in its income tax treaty with the United States. The withholding certificate, however, does not contain a statement regarding limitations on benefits or deriving the income under section 894 as required by § 1.1441–6(b)(1). USB cannot rely on the withholding certificate to grant a reduced rate of withholding because it is incomplete with respect to the claim made by F.

Example 2. F, a foreign person that has a direct account relationship with USB, a broker that is a U.S. person, provides USB with a withholding certificate for the purpose of claiming the portfolio interest exception under section 881(c), which applies to foreign corporations. F indicates on its withholding certificate, however, that it is a partnership. USB may not treat F as a beneficial owner of the interest for purposes of the portfolio interest exception because F has indicated on its withholding certificate that it is a foreign partnership, and therefore under § 1.1441–1(c)(6)(ii) it is not the beneficial owner of the interest payment.

(5) *Withholding certificate—establishment of foreign status.* A withholding agent has reason to know that a beneficial owner withholding certificate (as defined in § 1.1441–1(e)(2)) provided by a direct account holder in connection with a payment of an amount described in § 1.1441–6(c)(2) is unreliable or incorrect for purposes of establishing the account holder's status as a foreign person if the certificate is described in paragraph (b)(5)(i) or (ii) of this section.

(i) A withholding certificate is unreliable or incorrect if the withholding certificate has a permanent residence address (as defined in § 1.1441–1(e)(2)(ii)) in the United States, the withholding certificate has a mailing address in the United States, the withholding agent has a residence or mailing address as part of its account information that is an address in the United States, or the direct account holder notifies the withholding agent of a new residence or mailing address in the United States (whether or not provided on a withholding certificate). A withholding agent may, however, rely on the beneficial owner withholding certificate as establishing the account holder's foreign status if it may do so under the provisions of paragraph (b)(5)(i)(A) or (B) of this section.

(A) A withholding agent may treat a direct account holder as a foreign person if the beneficial owner withholding certificate has been provided by an individual and—

(*1*) The withholding agent has in its possession or obtains documentary evidence (which does not contain a U.S. address) that is no more than three years old, the documentary evidence supports the claim of foreign status, and the direct account holder provides the withholding agent with a reasonable explanation, in writing, supporting the account holder's foreign status; or

(*2*) The account is maintained at an office of the withholding agent outside the United States and the withholding agent is required to report annually a payment to the direct account holder on a tax information statement that is filed with the tax authority of the country in which the office is located and that country has an income tax treaty in effect with the United States.

(B) A withholding agent may treat an account holder as a foreign person if the beneficial owner withholding certificate has been provided by an entity that the withholding agent does not know, or does not have reason to know, is a flow-through entity and—

(*1*) The withholding agent has in its possession, or obtains, documentation that substantiates that the entity is actually organized or created under the laws of a foreign country; or

(*2*) The account is maintained at an office of the withholding agent outside the United States and the withholding agent is required to report annually a payment to the direct account holder on a tax information statement that is filed with the tax authority of the country in which the office is located and that country has an income tax treaty in effect with the United States.

(ii) A beneficial owner withholding certificate is unreliable or incorrect if it is provided with respect to an offshore account (as defined in § 1.6049–5(c)(1)) and the direct account holder has standing instructions directing the withholding agent to pay amounts from its account to an address or an account maintained in the United States. The withholding agent may treat the direct account holder as a foreign person, however, if the direct account holder provides a reasonable explanation in writing that supports its foreign status.

(6) *Withholding certificate—claim of reduced rate of withholding under treaty.* A withholding agent has reason to know that a withholding certificate (other than Form W–9) provided by a direct account holder in connection with a payment of an amount described in § 1.1441–6(c)(2) is unreliable or incorrect for purposes of establishing that the direct account holder is a resident of a country with which the United States has an income tax treaty if it is described in paragraphs (b)(6)(i) through (iii) of this section.

(i) A beneficial owner withholding certificate is unreliable or incorrect if the permanent residence address on the beneficial owner withholding certificate is not in the country whose treaty is invoked, or the direct account holder notifies the withholding agent of a new permanent residence address that is not in the treaty country. A withholding agent may, however, treat a direct account holder as entitled to a reduced rate of withholding under an income tax treaty if the direct account holder provides a reasonable explanation for the permanent residence address outside the treaty country (e.g., the address is the address of a branch of the beneficial owner located outside the treaty country in which the entity is a resident) or the withholding agent has in its possession, or obtains, documentary evidence that establishes residency in a treaty country.

(ii) A beneficial owner withholding certificate is unreliable or incorrect if the permanent residence address on the withholding certificate is in the applicable treaty country but the withholding certificate contains a mailing address outside the treaty country or the withholding agent has a mailing address as part of its account information that is outside the treaty country. A mailing address that is a P.O. Box, in-care-of address, or address at a financial institution (if the financial institution is not a beneficial owner) shall not preclude a withholding agent from treating the direct account holder as a resident of a treaty country if such address is in the treaty country. If a withholding agent has a mailing address (whether or not contained on the withholding certificate) outside the applicable treaty country, the withholding agent may nevertheless treat a direct account holder as a resident of an applicable treaty country if—

(A) The withholding agent has in its possession, or obtains, additional documentation supporting the direct account holder's claim of residence in the applicable treaty country (and the additional documentation does not contain an address outside the treaty country);

(B) The withholding agent has in its possession, or obtains, documentation that establishes that the direct account holder is an entity organized in a treaty country (or an entity managed and controlled in a treaty country, if the applicable treaty so requires);

(C) The withholding agent knows that the address outside the applicable treaty country (other than a P.O. box, or in-care-of address) is a branch of a bank or insurance company that is a resident of the applicable treaty country; or

(D) The withholding agent obtains a written statement from the direct account holder that reasonably establishes entitlement to treaty benefits.

(iii) A beneficial owner withholding certificate is unreliable or incorrect to establish entitlement to a reduced rate of withholding under an income tax treaty if the direct account holder has standing instructions for the withholding agent to pay amounts from its account to an address or an account outside the treaty country unless the direct account holder provides a reasonable explanation, in writing, establishing the direct account holder's residence in the applicable treaty country.

(7) *Documentary evidence.* A withholding agent shall not treat documentary evidence provided by a direct account holder as valid if the documentary evidence does not reasonably establish the identity of the person presenting the documentary evidence. For example, documentary evidence is not valid if it is provided in person by a direct account holder that is a natural person and the photograph or signature on the documentary evidence, if any, does not match the appearance or signature of the person presenting the document. A withholding agent shall not rely on documentary evidence to reduce the rate of withholding that would otherwise apply under the presumption rules of §§ 1.1441–1(b)(3), 1.1441–5(d) and (e)(6), and 1.6049–5(d) if the documentary evidence contains information that is inconsistent with the direct account holder's claim of a reduced rate of withholding, the withholding agent has other account information that is inconsistent with the direct account holder's claim, or the documentary evidence lacks information necessary to establish entitlement to a reduced rate of withholding. For example, if a direct account holder provides documentary evidence to claim treaty benefits and the documentary evidence establishes the direct account holder's status as a foreign person and a resident of a treaty country, but the account holder fails to provide the treaty statements required by § 1.1441–6(c)(5), the documentary evidence does not establish the direct account holder's entitlement to a reduced rate of withholding. For purposes of establishing a direct account holder's status as a foreign person or resident of a country with which the United States has an income tax treaty with respect to income described in § 1.1441–6(c)(2), documentary evidence shall be considered unreliable or incorrect only if it is not reliable under the rules of paragraph (b)(8) and (9) of this section.

(8) *Documentary evidence—establishment of foreign status.* A withholding agent has reason to know that documentary evidence provided in connection with a payment of an amount described in § 1.1441–6(c)(2) is unreliable or incorrect for purposes of establishing the direct account holder's status as a foreign person if the documentary evidence is described in paragraphs (b)(8)(i), (ii), (iii) or (iv) of this section.

(i) A withholding agent shall not treat documentary evidence provided by an account holder after December 31, 2000, as valid for purposes of establishing the direct account holder's foreign status if the only mailing or residence address that is available to the withholding agent is an address at a financial institution (unless the financial institution is a beneficial owner of the income), an in-care-of address, or a P.O. box. In this case, the withholding agent must obtain additional documentation that is sufficient to establish the direct account holder's status as a foreign

person. A withholding agent shall not treat documentary evidence provided by an account holder before January 1, 2001, as valid for purposes of establishing a direct account holder's status as a foreign person if it has actual knowledge that the direct account holder is a U.S. person or if it has a mailing or residence address for the direct account holder in the United States. If a withholding agent has an address for the direct account holder in the United States, the withholding agent may nevertheless treat the direct account holder as a foreign person if it can so treat the direct account holder under the rules of paragraph (b)(8)(ii) of this section. '

(ii) Documentary evidence is unreliable or incorrect to establish a direct account holder's status as a foreign person if the withholding agent has a mailing or residence address (whether or not on the documentation) for the direct account holder in the United States or if the direct account holder notifies the withholding agent of a new address in the United States. A withholding agent may, however, rely on documentary evidence as establishing the direct account holder's foreign status if it may do so under the provisions of paragraph (b)(8)(ii)(A) or (B) of this section.

(A) A withholding agent may treat a direct account holder that is an individual as a foreign person even if it has a mailing or residence address for the direct account holder in the United States if the withholding agent—

(*1*) Has in its possession or obtains additional documentary evidence (which does not contain a U.S. address) supporting the claim of foreign status and a reasonable explanation in writing supporting the account holder's foreign status;

(*2*) Has in its possession or obtains a valid beneficial owner withholding certificate on Form W–8 and the Form W–8 contains a permanent residence address outside the United States and a mailing address outside the United States (or if a mailing address is inside the United States the direct account holder provides a reasonable explanation in writing supporting the direct account holder's foreign status); or

(*3*) The account is maintained at an office of the withholding agent outside the United States and the withholding agent is required to report annually a payment to the direct account holder on a tax information statement that is filed with the tax authority of the country in which the office is located and that country has an income tax treaty in effect with the United States.

(B) A withholding agent may treat a direct account holder that is an entity (other than a flow-through entity) as a foreign person even if it has a mailing or residence address for the direct account holder in the United States if the withholding agent—

(*1*) Has in its possession, or obtains, documentation that substantiates that the entity is actually organized or created under the laws of a foreign country;

(*2*) Obtains a valid beneficial owner withholding certificate on Form W–8 and the Form W–8 contains a permanent residence address outside the United States and a mailing address outside the United States (or if a mailing address is inside the United States the direct account holder provides additional documentary evidence sufficient to establish the direct account holder's foreign status); or

(*3*) The account is maintained at an office of the withholding agent outside the United States and the withholding agent is required to report annually a payment to the direct account holder on a tax information statement that is filed with the tax authority of the country in which the office is located and that country has an income tax treaty in effect with the United States.

(iii) Documentary evidence is unreliable or incorrect if the direct account holder has standing instructions directing the withholding agent to pay amounts from its account to an address or an account maintained in the United States. The withholding agent may treat the direct account holder as a foreign person, however, if the account holder provides a reasonable explanation in writing that supports its foreign status.

(9) *Documentary evidence—claim of reduced rate of withholding under treaty.* A withholding agent has reason to know that documentary evidence provided in connection with a payment of an amount described in § 1.1441–6(c)(2) is unreliable or incorrect for purposes of establishing that a direct account holder is a resident of a country with which the United States has an income tax treaty if it is described in paragraph (b)(9)(i) or (ii) of this section.

(i) Documentary evidence is unreliable or incorrect if the withholding agent has a mailing or residence address for the direct account holder (whether or not on the documentary evidence) that is outside the applicable treaty country, or the only address that the withholding agent has (whether in or outside of the applicable treaty country) is a P.O. box, an in-care-of address, or the address of a financial institution (if the financial institution is not the beneficial owner). If a withholding agent has a mailing or residence address for the direct account holder outside the applicable treaty country, the withholding agent may nevertheless treat a direct account holder as a resident of an applicable treaty country if the withholding agent—

(A) Has in its possession, or obtains, additional documentary evidence supporting the direct account holder's claim of residence in the applicable treaty country (and the documentary evidence does not contain an address outside the applicable treaty country, a P.O. box, an in-care-of address, or the address of a financial institution);

(B) Has in its possession, or obtains, documentary evidence that establishes the direct account holder is an entity organized in a treaty country (or an entity managed and controlled in a treaty country, if the applicable treaty so requires); or

(C) Obtains a valid beneficial owner withholding certificate on Form W–8 that contains a permanent residence address and a mailing address in the applicable treaty country.

(ii) Documentary evidence is unreliable or incorrect if the direct account holder has standing instructions directing the withholding agent to pay amounts from its account to an address or an account maintained outside the treaty country unless the direct account holder provides a reasonable explanation, in writing, establishing the direct account holder's residence in the applicable treaty country.

(10) *Limits on reason to know—indirect account holders.* A financial institution that receives documentation from a payee through a nonqualified intermediary, a flow-through entity, or a U.S. branch described in § 1.1441–1(b)(2)(iv) (other than a U.S. branch that is treated as a U.S. person) with respect to a payment of an amount described in § 1.1441–6(c)(2) has reason to know that the documentation is unreliable or incorrect if a reasonably prudent person in the position of a withholding agent would question the claims made. This standard requires, but is not limited to, a withholding agent's compliance with the rules of paragraphs (b)(10)(i) through (iii).

(i) The withholding agent must review the withholding statement described in § 1.1441–1(e)(3)(iv) and may not rely on information in the statement to the extent the information does not support the claims made for any payee. For this purpose, a withholding agent may not treat a payee as a foreign person if an address in the United States is provided

for such payee and may not treat a person as a resident of a country with which the United States has an income tax treaty if the address for that person is outside the applicable treaty country. Notwithstanding a U.S. address or an address outside a treaty country, the withholding agent may treat a payee as a foreign person or a foreign person as a resident of a treaty country if a reasonable explanation is provided, in writing, by the nonqualified intermediary, flow-through entity, or U.S. branch supporting the payee's foreign status or the foreign person's residency in a treaty country.

(ii) The withholding agent must review each withholding certificate in accordance with the requirements of paragraphs (b)(5) and (6) of this section and verify that the information on the withholding certificate is consistent with the information on the withholding statement required under § 1.1441–1(e)(3)(iv). If there is a discrepancy between the withholding certificate and the withholding statement, the withholding agent may choose to rely on the withholding certificate, if valid, and instruct the nonqualified intermediary, flow-through entity, or U.S. branch to correct the withholding statement or apply the presumption rules of §§ 1.1441–1(b), 1.1441–5(d) and (e)(6), and 1.6049–5(d) to the payment allocable to the payee who provided the withholding certificate relates. A withholding agent that receives a withholding certificate before December 31, 2001, is not required to review the information on withholding certificates or determine if it is consistent with the information on the withholding statement until December 31, 2001. A withholding agent may withhold and report in accordance with a withholding statement until December 31, 2001, unless it has actually performed the verification procedures required by this paragraph (b)(10)(ii) and determined that the withholding statement is inaccurate with respect to a particular payee.

(iii) The withholding agent must review the documentary evidence provided by the nonqualified intermediary, flow-through entity, or U.S. branch to determine that there is no obvious indication that the payee is a U.S. non-exempt recipient or that the documentary evidence does not establish the identity of the person who provided the documentation (*e.g.,* the documentary evidence does not appear to be an identification document).

(11) *Additional guidance.* The IRS may prescribe other circumstances for which a withholding certificate or documentary evidence is unreliable or incorrect in addition to the circumstances described in paragraph (b) of this section to establish an account holder's status as a foreign person or a beneficial owner entitled to a reduced rate of withholding in published guidance (see § 601.601(d)(2) of this chapter).

* * * * *

Par. 10. Effective January 1, 2001, § 1.1441–9 is amended by revising paragraph (b)(2) to read as follows:

§ 1.1441–9 Exemption from withholding on exempt income of a foreign tax-exempt organization, including foreign private foundations.

* * * * *

(b) * * *

(2) *Withholding certificate.* A withholding certificate under this paragraph (b)(2) is valid only if it is a Form W–8 and if, in addition to other applicable requirements, the Form W–8 includes the taxpayer identifying number of the organization whose name is on the certificate, and it certifies that the Internal Revenue Service (IRS) has issued a favorable determination letter (and the date thereof) that is currently in effect, what portion, if any, of the amounts paid constitute income includible under section 512 in computing the organization's unrelated business taxable income, and, if the organization is described in section 501(c)(3), whether it is a private foundation described in section 509. Notwithstanding the preceding sentence, if the organization cannot certify that it has been issued a favorable determination letter that is still in effect, its withholding certificate is nevertheless valid under this paragraph (b)(2) if the organization attaches to the withholding certificate an opinion that is acceptable to the withholding agent from a U.S. counsel (or any other person as the IRS may prescribe in published guidance (see § 601.601(d)(2) of this chapter)) concluding that the organization is described in section 501(c). If the determination letter or opinion of counsel to which the withholding certificate refers concludes that the organization is described in section 501(c)(3), and the certificate further certifies that the organization is not a private foundation described in section 509, an affidavit of the organization setting forth sufficient facts concerning the operations and support of the organization for the Internal Revenue Service (IRS) to determine that such organization would be likely to qualify as an organization described in section 509(a)(1), (2), (3), or (4) must be attached to the withholding certificate. An organization that provides an opinion of U.S. counsel or an affidavit may provide the same opinion or affidavit to more than one withholding agent provided that the opinion is acceptable to each withholding agent who receives it in conjunction with a withholding certificate. Any such opinion of counsel or affidavit must be renewed whenever there is a change in facts or circumstances that are relevant to determine the organization's status under section 501(c) or, if relevant, that the organization is or is not a private foundation described in section 509.

* * * * *

Par. 12. Effective January 1, 2001, § 1.1461–1 is amended by:

1. Removing the last sentence of paragraph (a)(1).
2. Removing paragraphs (b)(2) and (b)(3) and redesignating paragraph (b)(4) as new paragraph (b)(2).
3. Revising paragraphs (c)(1), (c)(2), (c)(3), and (c)(4).
4. Removing paragraphs (c)(5), (c)(6), and (c)(7), and redesignating paragraph (c)(8) as new paragraph (c)(5).

The revisions read as follows:

§ 1.1461–1 Payment and returns of tax withhold.

* * * * *

(c) *Information returns*—(1) *Filing requirement*—(i) *In general.* A withholding agent (other than an individual who is not acting in the course of a trade or business with respect to a payment) must make an information return on Form 1042–S (or such other form as the IRS may prescribe) to report the amounts subject to reporting, as defined in paragraph (c)(2) of this section, that were paid during the preceding calendar year. Notwithstanding the preceding sentence, any person that withholds or is required to withhold an amount under sections 1441, 1442, or 1443 must file a Form 1042–S for the payment withheld upon whether or not that person is engaged in a trade or business and whether or not the payment is an amount subject to reporting. A Form 1042–S shall be prepared for each recipient of an amount subject to reporting. The Form 1042–S shall be prepared in such manner as the form and accompanying instructions prescribe. One copy of the Form 1042–S shall be filed with the IRS on or before March 15 of the calendar year following the year in which the amount subject to reporting was paid. It shall be filed with a transmittal form as provided in the instructions to the Form 1042–S and to the transmittal form. Withholding certificates, documentary evidence, or other statements or documentation

provided to a withholding agent are not required to be attached to the form. Another copy of the Form 1042–S must be furnished to the recipient for whom the form is prepared (or any other person, as required under this paragraph (c) or the instructions to the form) on or before March 15 of the calendar year following the year in which the amount subject to reporting was paid. The withholding agent must retain a copy of each Form 1042–S for the statute of limitations on assessment and collection applicable to the Form 1042 to which the Form 1042–S relates.

(ii) *Recipient*—(A) *Defined.* For purposes of this section, the term *recipient* means—

(*1*) A beneficial owner as defined in paragraph (c)(6) of this section, including a foreign estate or a foreign complex trust, as defined in § 1.1441–1(c)(25);

(*2*) A qualified intermediary as defined in § 1.1441–1(e)(5)(ii);

(*3*) A withholding foreign partnership as defined in § 1.1441–5(c)(2) or a withholding foreign trust under § 1.1441–5(e)(5)(v);

(*4*) An authorized foreign agent as defined in § 1.1441–7(c);

(*5*) A U.S. branch that is treated as a U.S. person under § 1.1441–1(b)(2)(iv)(A);

(*6*) A nonwithholding foreign partnership or a foreign simple trust as defined in § 1.1441–1(c)(24), but only to the extent the income is (or is treated as) effectively connected with the conduct of a trade or business in the United States by such entity;

(*7*) A payee, as defined in § 1.1441–1(b)(2) that is presumed to be a foreign person under the presumption rules of § 1.1441–1(b)(3); 1.1441–5(d) or (e)(6), or 1.6049–5(d); and

(*8*) Any other person as required on Form 1042–S or the instructions to the form.

(B) *Persons that are not recipients.* A recipient does not include—

(*1*) A nonqualified intermediary;

(*2*) A payment to a wholly-owned entity that is disregarded under § 301.7701–2(c)(2) of this chapter as an entity separate from its owner;

(*3*) A flow-through entity, as defined in § 1.1441–1(c)(23) (to the extent it is receiving amounts subject to reporting other than income effectively connected with the conduct of a trade or business in the United States); and

(*4*) A U.S. branch described in § 1.1441–1(b)(2)(iv) that is not treated as a U.S. person under that section.

(2) *Amounts subject to reporting*—(i) *In general.* Subject to the exceptions described in paragraph (c)(2)(ii) of this section, amounts subject to reporting on Form 1042–S are amounts paid to a foreign payee (including persons presumed to be foreign) that are amounts subject to withholding as defined in § 1.1441–2(a). Amounts subject to reporting include amounts subject to withholding even if no amount is deducted and withheld from the payment because of a treaty or Internal Revenue Code exception to taxation or because an amount withheld was reimbursed to the payee under the adjustment procedures of § 1.1461–2. In addition, amounts subject to reporting include any amounts paid to a foreign payee on which a withholding agent withheld an amount (either under chapter 3 of the Internal Revenue Code or section 3406) whether or not the amount is subject to withholding. Amounts subject to reporting include, but are not limited to, the following items—

(A) The entire amount of a corporate distribution (whether actual or deemed) irrespective of any estimate of the portion of the distribution that represents a taxable dividend;

(B) Interest, including the portion of a notional principal contract payment that is characterized as interest. Interest shall also be reported on Form 1042-S if it is bank deposit interest paid to nonresident alien individuals as required under § 1.6049–8;

(C) Rents;

(D) Royalties;

(E) Compensation for dependent and independent personal services performed in the United States;

(F) Annuities;

(G) Pension distributions and other deferred income;

(H) Gambling winnings that are not exempt from tax under section 871(j);

(I) Income from the cancellation of indebtedness unless the withholding agent is unrelated to the debtor and does not have knowledge of the facts that give rise to the payment (see § 1.1441–2(d));

(J) Amounts that are (or are presumed to be) effectively connected with the conduct of a trade or business in the United States (including deposit interest as defined in sections 871(i)(2)(A) and 881(d)) even if no withholding certificate is required to be furnished by the payee or beneficial owner. In the case of amounts paid on a notional principal contract described in § 1.1441–4(a)(3) that are presumed to be effectively connected with the conduct of a trade or business in the United States, the amount required to be reported is limited to the amount of cash paid from the notional principal contract;

(K) Scholarship, fellowship, or grant income and compensation for personal services that is not excludible from gross income under section 117 (whether or not the taxable scholarship, fellowship, grant income, or compensation for personal services is exempt from tax under an income tax treaty) paid to foreign students, trainees, teachers, or researchers;

(L) Amounts paid to foreign governments, international organizations, or the Bank for International Settlements, whether or not documentation must be provided;

(M) Interest (including original issue discount) paid with respect to foreign-targeted registered obligations described in § 1.871–14(e)(2) to the extent the documentation requirements described in § 1.871–14(e)(3) and (4) are required to be satisfied (taking into account the provisions of § 1.871–14(e)(4)(ii), if applicable); and

(N) Original issue discount paid on the redemption of an OID obligation. The amount to be reported is the amount of OID includible in the gross income of the holder of the obligation, if known, or, if not known, the total amount of original issue discount determined as if the holder held the obligation from its original issuance. A withholding agent may determine the total amount of OID by using the most recently published ''List of Original Issue Discount Instruments,'' (Publication 1212, available from the IRS Forms Distribution Centers).

(ii) *Exceptions to reporting.* The amounts listed in this paragraph (c)(2)(ii) are not required to be reported on Form 1042–S—

(A) Interest (including original issue discount) that is deposit interest under sections 871(i)(2)(A) and 881(d) and that is not effectively connected with the conduct of a trade or business in the United States, unless reporting is required under § 1.6049–8 (regarding payments to certain foreign residents) or is interest that is effectively connected with the conduct of a trade or business in the United States;

(B) Interest or original issue discount on certain short-term obligations, described in section 871(g)(1)(B) or 881(a)(3);

(C) Interest paid on obligations sold between interest payment dates and the portion of the purchase price of an OID obligation that is sold or exchanged in a transaction other than a redemption, unless the sale or exchange is part of a plan, the principal purpose of which is to avoid tax and the withholding agent has actual knowledge or reason to know of such plan (see § 1.1441–2(a)(5) and (6));

(D) Any item required to be reported on a Form W–2, including an item required to be shown on Form W–2 solely by reason of § 1.6041–2 (relating to return of information for payments to employees) or § 1.6052–1 (relating to information regarding payment of wages in the form of group-term life insurance);

(E) Any item required to be reported on Form 1099, and such other forms as are prescribed pursuant to the information reporting provisions of sections 6041 through 6050P and the regulations under those sections;

(F) Amounts paid on a notional principal contract described in § 1.1441–4(a)(3)(i) that are not effectively connected with the conduct of a trade or business in the United States (or not treated as effectively connected pursuant to § 1.1441–4(a)(3)(ii));

(G) Amounts required to be reported on Form 8288 (U.S. Withholding Tax Return for Dispositions by Foreign Persons of U.S. Real Property Interests) or Form 8804 (Annual Return for Partnership Withholding Tax (section 1446)). A withholding agent that must report a distribution partly on a Form 8288 or 8804 and partly on a Form 1042–S may elect to report the entire amount on a Form 8288 or 8804;

(H) Interest on a registered obligation that is targeted to foreign markets and qualifies as portfolio interest to the extent it is paid to a registered owner that is a financial institution or member of a clearing organization that has provided the proper withholding certificates (see §§ 1.1441–1(b)(4)(i) and 1.1441–2(a));

(I) Interest on a foreign targeted bearer obligation (see §§ 1.1441–1(b)(4)(i) and 1.1441–2(a));

(J) Gain described in section 301(c)(3); and

(K) Amounts described in § 1.1441–1(b)(4)(xviii) (dealing with certain amounts paid by the U.S. government).

(3) *Required information.* The information required to be furnished under this paragraph (c)(3) shall be based upon the information provided by or on behalf of the recipient of an amount subject to reporting (as corrected and supplemented based on the withholding agent's actual knowledge) or the presumption rules of §§ 1.1441–1(b)(3), 1.1441–4(a); 1.1441–5(d) and (e); 1.1441–9(b)(3) or 1.6049–5(d). The Form 1042–S must include the following information, if applicable—

(i) The name, address, and taxpayer identifying number of the withholding agent;

(ii) A description of each category of income paid based on the income codes provided on the form (e.g., interest, dividends, royalties, etc.) and the aggregate amount in each category expressed in U.S. dollars;

(iii) The rate of withholding applied or the basis for exempting the payment from withholding (based on exemption codes provided on the form);

(iv) The name and address of the recipient;

(v) The name and address of any nonqualified intermediary, flow-through entity, or U.S. branch as described in § 1.1441–1(b)(2)(iv) (other than a branch that is treated as a U.S. person) to which the payment was made;

(vi) The taxpayer identifying number of the recipient if required under § 1.1441–1(e)(4)(vii) or if actually known to the withholding agent making the return;

(vii) The taxpayer identifying number of a nonqualified intermediary or flow-through entity (to the extent it is not a recipient) or other flow-through entity to the extent it is known to the withholding agent;

(viii) The country (based on the country codes provided on the form) of the recipient and of any nonqualified intermediary or flow-through entity the name of which appears on the form; and

(ix) Such information as the form or the instructions may require in addition to, or in lieu of, information required under this paragraph (c)(3).

(4) *Method of reporting*—(i) *Payments by U.S. withholding agents to recipients.* A withholding agent that is a U.S. person (other than a foreign branch of a U.S. person that is a qualified intermediary as defined in § 1.1441–1(e)(5)(ii)) and that makes payments of amounts subject to reporting on Form 1042–S must file a separate Form 1042–S for each recipient who receives such amount. For purposes of this paragraph (c)(4), a U.S. person includes a U.S. branch described in § 1.1441–1(e)(2)(iv)(A) or (E) that agrees to be treated as a U.S. person. Except as may otherwise be required on Form 1042–S or the instructions to the form, only payments for which the income code, exemption code, withholding rate and recipient code are the same may be reported on a single Form 1042–S. See paragraph (c)(4)(ii) of this section for reporting of payments made to a person that is not a recipient.

(A) *Payments to beneficial owners.* If a U.S. withholding agent makes a payment directly to a beneficial owner it must complete Form 1042–S treating the beneficial owner as the recipient. Under the grace period rule of § 1.1441–1(b)(3)(iv), a U.S. withholding agent may, under certain circumstances, treat a payee as a foreign person while the withholding agent awaits a valid withholding certificate. A U.S. withholding agent who relies on the grace period rule to treat a payee as a foreign person must file a Form 1042–S to report all payments on Form 1042–S during the period that person was presumed to be foreign even if that person is later determined to be a U.S. person based on appropriate documentation or is presumed to be a U.S. person after the grace period ends. In the case of joint owners, a withholding agent may provide a single Form 1042–S made out to the owner whose status the U.S. withholding agent relied upon to determine the applicable rate of withholding. If, however, any one of the owners requests its own Form 1042–S, the withholding agent must furnish a Form 1042–S to the person who requests it. If more than one Form 1042–S is issued for a single payment, the aggregate amount paid and tax withheld that is reported on all Forms 1042–S cannot exceed the total amounts paid to joint owners and the tax withheld thereon.

(B) *Payments to a qualified intermediary, a withholding foreign partnership, or a withholding foreign trust.* A U.S. withholding agent that makes payments to a qualified intermediary (whether or not the qualified intermediary assumes primary withholding responsibility), a withholding foreign partnership, or a withholding foreign trust shall complete Forms 1042–S treating the qualified intermediary or withholding foreign partnership as the recipient. The U.S. withholding agent must complete a separate Form 1042–S for each withholding rate pool. A withholding rate pool is a payment of a single type of income (determined by the income codes on Form 1042–S) that is subject to a single rate of withholding. A qualified intermediary that does not assume primary withholding responsibility on all payments it receives provides information regarding the proportions of income subject to a particular withholding rate to the withholding agent on a withholding statement associated with a qualified intermediary withholding certificate. A qualified intermediary may provide a U.S. withholding agent with information regarding withholding rate pools for U.S. non-exempt recipients (as defined under § 1.1441–1(c)(21)). Amounts paid with respect to such withholding rate pools must be reported on Form 1099 completed for each U.S. non-exempt recipient to the extent they are subject to Form 1099 reporting. These amounts must not be reported on

Form 1042–S. In addition, the qualified intermediary may provide the U.S. withholding agent information regarding withholding rate pools for U.S. persons that are exempt recipients as defined under § 1.1441–1(c)(20). If such information is provided, a U.S. withholding agent should not report such withholding rate pools on Form 1042–S.

(C) *Amounts paid to U.S. branches treated as U.S. persons.* A U.S. withholding agent making a payment to a U.S. branch of a foreign person described in § 1.1441–1(b)(2)(iv) shall complete Form 1042–S as follows—

(*1*) If the branch has provided the U.S. withholding agent with a withholding certificate that evidences its agreement with the withholding agent to be treated as a U.S. person, the U.S. withholding agent files Forms 1042–S treating the U.S. branch as the recipient;

(*2*) If the branch has provided the U.S. withholding agent with a withholding certificate that transmits information regarding beneficial owners, qualified intermediaries, withholding foreign partnerships, or other recipients, the U.S. withholding agent must complete a separate Form 1042–S for each recipient whose documentation is associated with the U.S. branch's withholding certificate; or

(*3*) If the U.S. withholding agent cannot reliably associate a payment with a valid withholding certificate from the U.S. branch, it shall treat the U.S. branch as the recipient and report the income as effectively connected with the conduct of a trade or business in the United States.

(D) *Amounts paid to an authorized foreign agent.* If a U.S. withholding agent makes a payment to an authorized foreign agent, the withholding agent files Forms 1042–S treating the authorized foreign agent as the recipient, provided that the authorized foreign agent reports the payments on Forms 1042–S to each recipient to which it makes payments. If the authorized foreign agent fails to report the amounts paid on Forms 1042–S for each recipient to which the payment is made, the U.S. withholding agent remains responsible for such reporting.

(E) *Dual* Claims. A U.S. withholding agent may make a payment to a foreign entity that is simultaneously claiming a reduced rate of tax on its own behalf for a portion of the payment and a reduced rate on behalf of persons in their capacity as interest holders in that entity on the remaining portion. See § 1.1441–6(b)(2)(iii). If the claims are consistent and the withholding agent accepts the multiple claims, the withholding agent must file a separate Form 1042–S for those payments for which the entity is treated as the beneficial owner and Forms 1042–S for each of the interest holder in the entity for which the interest holder is treated as the recipient. For those payments for which the interest holder in an entity is treated as the recipient, the U.S. withholding agent shall prepare the Form 1042–S in the same manner as a payment made to a nonqualified intermediary or flow-through entity as set forth in paragraph (c)(4)(ii) of this section. If the claims are consistent but the withholding agent has not chosen to accept the multiple claims, or if the claims are inconsistent, the withholding agent must file a separate Form 1042–S for the person or persons it has chosen to treat as the recipients.

(ii) *Payments made by U.S. withholding agents to persons that are not recipients*—(A) *Amounts paid to a nonqualified intermediary, a flow-through entity, and certain U.S. branches.* If a U.S. withholding agent makes a payment to a nonqualified intermediary, a flow-through entity, or a U.S. branch described in § 1.1441–1(b)(2)(iv) (other than a branch that agrees to be treated as a U.S. person), it must complete a separate Form 1042–S for each recipient to the extent the withholding agent can reliably associate a payment with valid documentation (within the meaning of § 1.1441–1(b)(2)(vii)) from the recipient which is associated with the withholding certificate provided by the nonqualified intermediary, flow-through entity, or U.S. branch. If a payment is made through tiers of nonqualified intermediaries or flow-through entities, the withholding agent must nevertheless complete Form 1042–S for the recipients to the extent it can reliably associate the payment with documentation from the recipients. A withholding agent that is completing a Form 1042–S for a recipient that receives a payment through a nonqualified intermediary, a flow-through entity, or a U.S. branch must include on the Form 1042–S the name of the nonqualified intermediary or flow-through entity from which the recipient directly receives the payment. If a U.S. withholding agent cannot reliably associate the payment, or any portion of the payment, with valid documentation from a recipient either because no such documentation has been provided or because the nonqualified intermediary, flow-through entity, or U.S. branch has failed to provide sufficient allocation information so that the withholding agent can associate the payment, or any portion thereof, with valid documentation, then the withholding agent must report the payments as made to an unknown recipient in accordance with the appropriate presumption rules for that payment. Thus, if under the presumption rules the payment is presumed to be made to a foreign person, the withholding agent must generally withhold 30 percent of the payment and report the payment on Form 1042–S made out to an unknown recipient and shall also include the name of the nonqualified intermediary or flow-through entity that received the payment on behalf of the unknown recipient. If, however, the recipient is presumed to be a U.S. non-exempt recipient (as defined in § 1.1441–1(c)(21)), the withholding agent must withhold on the payment as required under section 3406 and report the payment as made to an unknown recipient on the appropriate Form 1099 as required under chapter 61 of the Internal Revenue Code.

(B) *Disregarded entities.* If a U.S. withholding agent makes a payment to a disregarded entity but receives a valid withholding certificate or other documentary evidence from a foreign person that is the single owner of a disregarded entity, the withholding agent must file a Form 1042–S treating the foreign single owner as the recipient. The taxpayer identifying number on the Form 1042–S, if required, must be the foreign single owner's TIN.

(iii) *Reporting by qualified intermediaries, withholding foreign partnerships, and withholding foreign trusts.* A qualified intermediary, a withholding foreign partnership, and a withholding foreign trust shall report payments on Form 1042–S as provided in their agreements with the IRS and the instructions to the form.

(iv) *Reporting by a nonqualified intermediary, flow-through entity, and certain U.S. branches.* A nonqualified intermediary, flow-through entity, or U.S. branch described in § 1.1441–1(e)(2)(iv) (other than a U.S. branch that is treated as a U.S. person) is a withholding agent and must file Forms 1042–S for amounts paid to recipients in the same manner as a U.S. withholding agent. A Form 1042–S will not be required, however, if another withholding agent has reported the same amount to the same recipient for which the nonqualified intermediary, flow-through entity, or U.S. branch would be required to file a return and the entire amount that should be withheld from such payment has been withheld. A nonqualified intermediary, flow-through entity, or U.S. branch must

report payments made to recipients to the extent it has failed to provide the appropriate documentation to another withholding agent together with the information required for that withholding agent to reliably associate the payment with the recipient documentation or to the extent it knows, or has reason to know, that less than the required amount has been withheld. A nonqualified intermediary or flow-through entity that is required to report a payment on Form 1042–S must follow the same rules as apply to a U.S. withholding agent under paragraph (c)(4)(i) and (ii) of this section.

(v) *Pro rata reporting for allocation failures.* If a nonqualified intermediary, flow-through entity, or U.S. branch described in § 1.1441–1(b)(2)(iv) (other than a branch treated as a U.S. person) that uses the alternative procedures of § 1.1441–1(e)(3)(iv)(D) fails to provide information sufficient to allocate the amount subject to reporting paid to a withholding rate pool to the payees identified for that pool, then the withholding agent shall report the payment in accordance with the rule provided in § 1.1441–1(e)(3)(iv)(D)(*6*).

(vi) *Other withholding agents.* Any person that is a withholding agent not described in paragraph (c)(4)(i), (iii), or (iv) of this section (e.g., a foreign person that is not a qualified intermediary, flow-through entity, or U.S. branch) shall file Form 1042–S in the same manner as a U.S. withholding agent and in accordance with the instructions to the form.

* * * * *

Par. 11. Effective January 1, 2001, § 1.6041–1 is amended by revising paragraph (d)(5) to read as follows:

§ 1.6041–1 Return of information as to payments of $600 or more.

* * * * *

(d) * * *

(5) *Notional principal contracts.* Except as provided in paragraphs (b)(5)(i) and (ii) of this section, amounts paid after December 31, 2000, with respect to notional principal contracts referred to in § 1.863–7 or 1.988–2(e) to persons who are not described in § 1.6049–4(c)(1)(ii) are required to be reported in returns of information under this section. The amount required to be reported under this paragraph (d)(5) is limited to the amount of cash paid from the notional principal contract as described in § 1.446–3(d). A non-periodic payment is reportable for the year in which an actual payment is made. Any amount of interest determined under the provisions of § 1.446–3(g)(4) (dealing with interest in the case of a significant non-periodic payment) is reportable under this paragraph (d)(5) and not under section 6049 (see § 1.6049–5(b)(15)). See § 1.6041–4(a)(4) for reporting exceptions regarding payments to foreign persons. See, however, § 1.1461–1(c)(1) for reporting amounts described under this paragraph (d)(5) that are paid to foreign persons. The provisions of § 1.6049–5(d) shall apply for determining whether a payment with respect to a notional principal contract is made to a foreign person. See § 1.6049–4(a) for a definition of payor. For purposes of this paragraph (d)(5), a payor includes a middleman defined in § 1.6049–4(f)(4).

(i) An amount paid with respect to a notional principal contract is not required to be reported if the payment is made outside the United States (as defined in § 1.6049–5(e)) by a non-U.S. payor or a non-U.S. middleman.

(ii) An amount paid with respect to a notional principal contract is not required to be reported if the payment is made outside the United States (as defined in § 1.6049–5(e)) by a payor that has no actual knowledge that the payee is a U.S. person, and the payor is—

(A) A U.S. payor or U.S. middleman that is not a U.S. person (such as a controlled foreign corporation defined in section 957(a) or certain foreign corporations or foreign partnerships engaged in a U.S. trade or business); or

(B) A foreign branch of a U.S. bank. See § 1.6049–5(c)(5) for a definition of a U.S. payor, a U.S. middleman, a non-U.S. payor, and a non-U.S. middleman.

* * * * *

Par. 12. Effective January 1, 2001, § 1.6041–4 is amended by 1. Revising paragraph (a)(3).

2. Adding paragraph (a)(6).

The revision and addition read as follows:

§ 1.6041–4 Foreign-related items and other exceptions.

(a) * * *

(3) Returns of information are not required for amounts paid by a foreign intermediary described in § 1.1441–1(c)(13) that it has received in its capacity as an intermediary and that are associated with a valid withholding certificate described in § 1.1441–1(e)(3)(ii) or (iii) and payments made by a U.S. branch of a foreign bank or of a foreign insurance company described in § 1.1441–1(b)(2)(iv) (other than a U.S. branch that is treated as a U.S. person) that are associated with a valid withholding certificate described in § 1.1441–1(e)(3)(v), which certificate the intermediary or branch has furnished to the payor or middleman from whom it has received the payment, unless, and to the extent, the intermediary or branch knows that the payments are required to be reported under § 1.6041–1 and were not so reported. For example, if a foreign intermediary or U.S. branch described in § 1.1441–1(b)(2)(iv) fails to provide information regarding U.S. persons that are not exempt from reporting under § 1.6041–3(q) to the person from whom the intermediary or U.S. branch receives the payment, the foreign intermediary or U.S. branch must report the payment on an information return. The exception of this paragraph (a)(3) shall not apply to a qualified intermediary that assumes reporting responsibility under chapter 61 of the Internal Revenue Code.

* * * * *

(6) For rules concerning direct sellers, see § 1.6041A–1(d)(3)(i)(C).

* * * * *

Par. 13. Effective January 1, 2001, § 1.6041A–1 is amended by:

1. Revising paragraph (d)(3)(i)(B).

2. Adding paragraph (d)(3)(i)(C).

The revision and addition read as follows:

§ 1.6041A–1 Returns regarding payments of remuneration for services and certain direct sales.

* * * * *

(d) * * *

(3) * * * (i) * * *

(B) Returns of information are not required for payments of remuneration for services from sources outside the United States (determined under the provisions of part I, subchapter N, chapter 1 of the Internal Revenue Code and the regulations under those provisions) if payments are made outside the United States by a non-U.S. payor or non U.S. middleman. For a definition of non U.S. payor or non-U.S. middleman, see § 1.6049–5(c)(5). For circumstances in which a payment is considered to be made outside the United States, see § 1.6049–5(e).

(C) Returns of information are not required under sections 6041 or 6041A for amounts paid outside of the United States (within the meaning of § 1.6049–5(e)) as remuneration for services as a direct seller (within the meaning of section 3508) performed outside of the United States or for sales described in section 6041A(b) made outside of the United States of consumer products for resale outside of the United States.

* * * * *

Par. 14. Effective January 1, 2001, § 1.6042–3 is amended by revising paragraph (b)(1)(vi) to read as follows:

§ 1.6042–3 Dividends subject to reporting.

* * * * *

(b) * * * (1) * * *

(vi) Payments made by a foreign intermediary described in § 1.1441–1(c)(13) of amounts that it has received in its capacity as an intermediary and that are associated with a valid withholding certificate described in § 1.1441–1(e)(3)(ii) or (iii) and payments made by a U.S. branch of a foreign bank or of a foreign insurance company described in § 1.1441–1(b)(2)(iv) (other than a U.S. branch that is treated as a U.S. person) that are associated with a valid withholding certificate described in § 1.1441–1(e)(3)(v), which certificate the intermediary or branch has furnished to the payor or middleman from whom it has received the payment, unless, and to the extent, the intermediary or branch knows that the payments are required to be reported under § 1.6042–2 and were not so reported. For example, if a foreign intermediary or U.S. branch described in § 1.1441–1(b)(2)(iv) fails to provide information regarding U.S. persons that are not exempt from reporting under § 1.6049–4(c)(1)(ii) to the person from whom the intermediary or U.S. branch receives the payment, the amount paid by the foreign intermediary or U.S. branch to such person is a dividend. The exception of this paragraph (b)(1)(vi) shall not apply to a qualified intermediary that assumes reporting responsibility under chapter 61 of the Internal Revenue Code.

* * * * *

Par. 15. Effective January 1, 2001, § 1.6045–1 is amended by:

1. Removing the last sentence of paragraph (g)(1)(i) and adding two new sentences in its place.
2. Revising paragraph (g)(3)(iv).
3. Revising paragraph (g)(4), *Example* 7.
4. Adding *Examples 8* and *9* to paragraph (g)(4).

The additions and revisions read as follows:

§ 1.6045–1 Returns of information of brokers and barter exchanges.

* * * * *

(g) * * * (1) * * *

(i) * * * For purposes of this paragraph (g)(1)(i), a broker that is required to obtain, or chooses to obtain, a beneficial owner withholding certificate described in § 1.1441–1(e)(2)(i) from an individual may rely on the withholding certificate only to the extent the certificate includes a certification that the beneficial owner has not been, and at the time the certificate is furnished, reasonably expects not to be present in the United States for a period aggregating 183 days or more during each calendar year to which the certificate pertains. The certification is not required if a broker receives documentary evidence under § 1.6049–5(c)(1) or (4).

* * * * *

(3) * * *

(iv) *Special rules where the customer is a foreign intermediary or certain U.S. branches.* A foreign intermediary, as defined in § 1.1441–1(c)(13), is an exempt foreign person, except when the broker has actual knowledge or reason to know (within the meaning of § 1.6049–5(c)(3)) that the person for whom the intermediary acts is a U.S. person that is not exempt from reporting under § 5f.6045–1(c)(3) of this chapter or the broker is required to presume under § 1.6049–5(d)(3) that the payee is a U.S. person that is not an exempt recipient. If an intermediary, as defined in § 1.1441–1(c)(13), or a U.S. branch described in § 1.1441–1(b)(2)(iv) (other than a U.S. branch that is treated as a U.S. person) receives a payment from a payor or middleman, which payment the payor or middleman can associate with a valid withholding certificate described in § 1.1441–1(e)(3)(ii), (iii), or (v) furnished by such intermediary or U.S. branch, then the intermediary or U.S. branch is not required to report such payment when it, in turn, pays the amount to the person whose name is on the certificate furnished by the intermediary or U.S. branch to the payor or middleman, unless, and to the extent, the intermediary or U.S. branch knows that the payment is required to be reported under this section and was not so reported. For example, if a foreign intermediary or U.S. branch fails to provide information regarding U.S. persons that are not exempt from reporting under § 5f.6045–1(c)(3) of this chapter to the person from whom the intermediary or U.S. branch receives the payment, the foreign intermediary or U.S. branch must report the payment on an information return. The exception of this paragraph (g)(3)(iv) shall not apply to a qualified intermediary that assumes reporting responsibility under chapter 61 of the Internal Revenue Code.

(4) * * *

Example 7. Customer A, an individual, owns U.S. corporate bonds issued in registered form after July 18, 1984 and carrying a stated rate of interest. The bonds are held through an account with foreign bank, X, and are held in street name. X is a wholly-owned subsidiary of a U.S. company and is not a qualified intermediary within the meaning of § 1.1441–1(e)(5)(ii). X has no documentation regarding A. A instructs X to sell the bonds. In order to effect the sale, X acts through its agent in the United States, Y. Y sells the bonds and remits the sales proceeds to X. X credits A's account in the foreign country. X does not provide documentation to Y.

(i) *Y's obligations to withhold and report.* Y treats X as the customer, and not A, because Y cannot treat X as an intermediary because it has received no documentation from X. Y is not required to report the sales proceeds under the multiple broker exception under § 5f.6045–1(c)(3)(ii) of this chapter, because X is an exempt recipient. Further, Y is not required to report the amount of accrued interest paid to X on Form 1042–S under § 1.1461–1(c)(2)(ii) because accrued interest is not an amount subject to reporting unless the withholding agent knows that the obligation is being sold with a primary purpose of avoiding tax.

(ii) *X's obligations to withhold and report.* Although X has effected, within the meaning of paragraph (a)(1) of this section, the sale of a security at an office outside the United States under paragraph (g)(3)(iii) of this section, X is treated as a broker, under paragraph (a)(1) of this section, because as a wholly-owned subsidiary of a U.S. corporation, X is a U.S. payor. See § 1.6049–5(c)(5). Under the presumptions described in § 1.6049–5(d)(2), X must presume that, with respect to the sales proceeds, A is a U.S. person who is not an exempt recipient. Therefore the payment of sales proceeds to A by X is reportable on a Form 1099 under paragraph (c)(2) of this section. X has no obligation to backup withhold on the payment based on the exemption under § 31.3406(g)–1(e) of this chapter, unless X has actual knowledge that A is a U.S. person that is not an exempt recipient. X is also required to separately report the accrued interest (see paragraph (d)(3) of this section) on Form 1099 under section 6049 because A is also presumed to be a U.S. person who is not an exempt recipient under the presumption rule in § 1.6049–5(d)(2) and § 1.1441–1(b)(3)(iii) since accrued interest is not an amount subject to reporting and therefore the presumption of foreign status for offshore accounts under § 1.1441–1(b)(3)(iii)(D) does not apply.

Example 8. The facts are the same as in *Example 7,* except that instead of U.S. corporate bonds that carry stated interest, A owns original issue discount instruments described in section 871(g)(1)(B)(i) (i.e., obligations payable 183 days or less from the date of original issue). In addition, the sale is in a transaction other than a redemption.

(i) *Y's obligations to withhold and report.* Y is not required to report the sales proceeds under the multiple broker exception under § 5f.6045–1(c)(3)(ii) of this chapter, because X is an exempt recipient.

(ii) *X's obligations to withhold and report.* Although X has effected, within the meaning of paragraph (a)(1) of this section, the sale of a security at an office outside the United States under paragraph (g)(3)(iii) of this section, X is treated as a broker, under paragraph (a)(1) of this section, because as a wholly-owned subsidiary of a U.S. corporation, X is a U.S. payor. See § 1.6049–5(c)(5). Under the presumptions described in § 1.6049–5(d)(2), X must presume that, with respect to the sales proceeds, A is a U.S. person who is not an exempt recipient. Therefore the payment of sales proceeds to A by X is reportable on a Form 1099 under paragraph (c)(2) of this section. X has no

obligation to backup withhold on the payment based on the exemption under § 31.3406(g)–1(e) of this chapter, unless X has actual knowledge that A is a U.S. person that is not an exempt recipient. X is not required to separately report the amount of accrued original issue discount. See paragraph (d)(3) of this section.

Example 9. The facts are the same as in *Example 8*, except that X is a foreign corporation that is not a U.S. payor under § 1.6049–5(c).

(i) *Y's obligations to withhold and report.* Y is not required to report the sales proceeds under the multiple broker exception under § 5f.6045–1(c)(3)(ii) of this chapter, because X is the person responsible for paying the proceeds from the sale to A.

(ii) *X's obligations to withhold and report.* Although A is presumed to be a U.S. payee under the presumptions of § 1.6049–5(d)(2), X is not considered to be a broker under paragraph (a)(1) of this section because it is a not a U.S. payor under § 1.6049–5(c)(5). Therefore X is not required to report the sale under paragraph (c)(2) of this section.

* * * * *

Par. 16. Effective January 1, 2001, § 1.6049–4 is amended by revising the introductory text of paragraph (c)(1)(ii) to read as follows:

§ 1.6049–4 Return of information as to interest paid and original issue discount includible in gross income after December 31, 1982.

* * * * *

(c) * * * (1) * * *

(ii) *Exempt recipient defined.* The term *exempt recipient* means any person described in paragraphs (c)(1)(ii)(A) through (Q) of this section. An exempt recipient is generally exempt from information reporting without filing a certificate claiming exempt status unless the provisions of this paragraph (c)(1)(ii) require a payee to file a certificate.

A payor may, in any case, require a payee that is a U.S. person not otherwise required to file a certificate under this paragraph (c)(1)(ii) to file a certificate in order to qualify as an exempt recipient. See § 31.3406(h)–3(a)(1)(iii) and (c)(2) of this chapter for the certificate that a payee that is a U.S. person must provide when a payor requires the certificate to treat the payee as an exempt recipient under this paragraph (c)(1)(ii). A payor may treat a payee as an exempt recipient based upon a properly completed form as described in § 31.3406(h)–3(e)(2) of this chapter, its actual knowledge that the payee is a person described in this paragraph (c)(1)(ii), or the indicators described in this paragraph (c)(1)(ii).

* * * * *

Par. 17. Effective January 1, 2001, § 1.6049–5 is amended by:

1. Adding a sentence at the end of paragraph (b)(10)(ii).
2. Adding a sentence at the end of the introductory text of paragraph (b)(11).
3. Revising paragraph (b)(14).
4. Adding a sentence at the end of paragraph (c)(1).
5. Revising paragraph (c)(4).
6. In paragraph (c)(6), removing *Example 3* and redesignating *Examples 4* and *5* as *Examples 3* and *4*, respectively; in newly designated *Example 3*, revise the language ''The facts are the same as in *Example 3*'' to read ''The facts are the same as in *Example 2*''; in addition, in newly designated *Example 4*, revise the language ''The facts are the same as in *Example 4*'' to read ''The facts are the same as in *Example 3*''.
7. Revising the first sentence of paragraph (d)(1) introductory text.
8. Revising paragraphs (d)(2)(i) and (d)(2)(ii), (d)(3), and (d)(4).
9. Removing paragraph (d)(5).

The additions and revisions read as follows:

§ 1.6049–5 Interest and original issue discount subject to reporting after December 31, 1982.

* * * * *

(b) * * *

(10) * * *

(ii) * * * The exemption from reporting described in this paragraph (b)(10) shall not apply if the payor has actual knowledge that the payee is a U.S. person who is not an exempt recipient.

(11) * * * The exemption from reporting described in this paragraph (b)(11) shall not apply if the payor has actual knowledge that the payee is a U.S. person who is not an exempt recipient.

* * * * *

(14) Payments made by a foreign intermediary described in § 1.1441–1(e)(3)(i) of amounts that it has received in its capacity as an intermediary and that are associated with a valid withholding certificate described in § 1.1441–1(e)(3)(ii) or (iii) and payments made by a U.S. branch of a foreign bank or of a foreign insurance company described in § 1.1441–1(b)(2)(iv) (other than a U.S. branch that is treated as a U.S. person) that are associated with a valid withholding certificate described in § 1.1441–1(e)(3)(v), which certificate the intermediary or branch has furnished to the payor or middleman from whom it has received the payment, unless, and to the extent, the intermediary or branch knows that the payments are required to be reported under § 1.6049–4 and were not so reported. For example, if a foreign intermediary or U.S. branch described in § 1.1441–1(b)(2)(iv) fails to provide information regarding U.S. persons that are not exempt from reporting under § 1.6049–4(c)(1)(ii) to the person from whom the intermediary or U.S. branch receives the payment, the amount paid by the foreign intermediary or U.S. branch to such person is interest or original issue discount. The exception of this paragraph (b)(14) shall not apply to a qualified intermediary that assumes reporting responsibility under chapter 61 of the Internal Revenue Code.

* * * * *

(c) * * * (1) * * * A payor may also rely on documentary evidence associated with a flow-through withholding certificate for payments treated as made to foreign partners of a nonwithholding foreign partnership, as defined in § 1.1441–1(c)(28), the foreign beneficiaries of a foreign simple trust, as defined in § 1.1441–1(c)(24), or foreign owners of a foreign grantor trust, as defined in § 1.1441–1(c)(26), even though the partnership or trust account is maintained in the United States.

* * * * *

(4) *Special documentation rules for certain payments.* This paragraph (c)(4) modifies the provisions of this paragraph (c) for payments to offshore accounts maintained at a bank or other financial institution of amounts that are not subject to withholding under chapter 3 of the Internal Revenue Code, other than amounts described in paragraph (d)(3)(iii) of this section (dealing with U.S. short-term OID and U.S. bank deposit interest). Amounts are not subject to withholding under chapter 3 of the Internal Revenue Code if they are not included in the definition of amounts subject to withholding under § 1.1441–2(a) (e.g., deposit interest with foreign branches of U.S. banks, foreign source income, or broker proceeds).

(i) *Special rule when non-renewable documentary evidence is customary.* If it is customary in the country in which a branch or office of a bank or other financial institution is located to obtain documentary evidence described in paragraph (c)(1) of this section, but it is not customary for such documentary evidence to be renewed, then a payor may, in lieu of obtaining a withholding certificate, request such documentary evidence for an account maintained at such branch or office. The bank or other financial institution may rely on such documentary evidence to treat a person as a foreign person without renewing such documentary evidence in accordance with paragraph (c)(2) of this section and § 1.1441–1(e)(4)(ii) if it may rely on the documentary evidence as sufficient to establish the person's

foreign status under § 1.1441–7(b)(7) and (8). If, however, the bank or other financial institution may, under § 1.1441–7(b)(8) treat a payee as a foreign person even though it has a residence or mailing address for the payee in the United States, or has standing instructions to pay amounts from its account to an address in the United States or an account maintained in the United States, then the payor shall rely on the documentary evidence only for a period of three full calendar years after the calendar year in which the documentary evidence is provided to the payor or, if earlier, until the payor is aware of a change of circumstances that affects the validity of the documentation as establishing the payee's status as a foreign person.

(ii) *Statement in lieu of documentary evidence.* If under the local laws, regulations, or practices applicable to a type of account or transaction it is not customary to obtain documentary evidence described in paragraph (c)(1) of this section, the bank or other financial institution may, instead of obtaining a beneficial owner withholding certificate described in § 1.1441–1(e)(2)(i) or documentary evidence described in paragraph (c)(1) of this section, establish a payee's foreign status based on the statement described in this paragraph (4)(ii) (or such substitute statement as the Internal Revenue Service may prescribe) made on an account opening form. The statement shall be valid only if the mailing and residence addresses of the payee are outside the United States and there are no other indicia of U.S. status. If reliance is not permitted because there are indicia of U.S. status then the payor must obtain either documentary evidence described in paragraph (c)(1) of this section or a Form W–8 described in § 1.1441–1(e)(2)(i) to treat the customer as a foreign payee. In such a case, the form or documentary evidence must be renewed every three years in accordance with the renewal procedures set forth in § 1.1441–1(e)(4)(ii)(A) for as long as indicia of U.S. status continue to be present. The statement referred to in this paragraph (c)(4)(i) of this section must appear near the signature line and must read as follows:

By opening this account and signing below, the account owner represents and warrants that he/she/it is not a U.S. person for purposes of U.S. Federal income tax and that he/she/it is not acting for, or on behalf of, a U.S. person. A false statement or misrepresentation of tax status by a U.S. person could lead to penalties under U.S. law. If your tax status changes and you become a U.S. citizen or a resident, you must notify us within 30 days.

(iii) *Continuous validity of declaration of foreign status subject to due diligence by financial institution.* A declaration of foreign status described in paragraph (c)(4)(ii) of this section does not expire unless the bank or financial institution becomes aware of circumstances indicating that the customer may be a U.S. person.

(iv) *Exception for existing accounts.* The rules of paragraphs (c)(4)(i) and (iii) of this section shall apply to accounts opened on or after January 1, 2001. For accounts opened before 2001, a bank or other financial institution may rely on the rules contained in §§ 35a.9999–3(ii) Q&A 34 and 35a.9999–4T Q&A 1 and 5 of this chapter in effect prior to January 1, 2001 (see 26 CFR Parts 30–39 revised as of April 1, 2000).

* * * * *

(d) * * * (1) *Identifying the payee.* The provisions of §§ 1.1441–1(b)(2), 1.1441–5(c)(1), (e)(2) and (3) shall apply (by applying the term *payor* instead of the term *withholding agent*) to identify the payee for purposes of this section (and other sections of the regulations under this chapter to which this paragraph (d)(1) applies), except to the extent provided in this paragraph (d)(1) in the case of a payment of amounts that are not subject to withholding under chapter 3 of the Internal Revenue Code. * * *

* * * * *

(2) *Presumptions of classification and U.S. or foreign status in the absence of documentation*—(i) *In general.* Except as otherwise provided in this paragraph (d)(2)(i), for purposes of this section (and other sections of regulations under this chapter to which this paragraph (d)(2) applies), the provisions of § 1.1441–1(b)(3)(i), (ii), (iii), (vii), (viii), and (ix) and 1.1441–5(d) and (e)(6) shall apply (by applying the term *payor* instead of the term *withholding agent*) to determine the classification (e.g., individual, corporation, partnership, trust), status (i.e., a U.S. or a foreign person), and other relevant characteristics (e.g., beneficial owner or intermediary) of a payee if a payment cannot be reliably associated with valid documentation under § 1.1441–1(b)(2)(vii) irrespective of whether the payments are subject to withholding under chapter 3 of the Internal Revenue Code. The provisions of § 1.1441–1(b)(3)(iii)(D) and (vii)(B) shall not apply, however, to payments of amounts that are not subject to withholding. In addition, § 1.1441–5(d)(2) shall not apply to treat a partnership as a foreign partnership with respect to amounts that are not subject to withholding unless the payor has actual knowledge of the payee's employer identification number and that number begins with the two digits ''98.'' The rules of § 1.1441–1(b)(2)(vii) shall apply for purposes of determining when a payment can reliably be associated with documentation, by applying the term *payor* instead of the term *withholding agent.* For this purpose, the documentary evidence or statement described in paragraph (c)(4) of this section can be treated as documentation with which a payment can be associated.

(ii) *Grace period in the case of indicia of a foreign payee.* When the conditions of this paragraph (d)(2)(ii) are satisfied, the 30-day grace period provisions under section 3406(e) shall not apply and the provisions of this paragraph (d)(2)(ii) shall apply instead. A payor that, at any time during the grace period described in this paragraph (d)(2)(ii), credits an account with payments described in § 1.1441–6(c)(2) that are reportable under sections 6042, 6045, 6049, or 6050N may, instead of treating the account as owned by a U.S. person and applying backup withholding under section 3406, if applicable, choose to treat the account as owned by a foreign person if, at the beginning of the grace period, the address that the payor has in its records for the account holder is in a foreign country, the payor has been furnished the information contained in a withholding certificate described in § 1.1441–1(e)(2)(i) or (3)(i) (by way of a facsimile copy of the certificate or other non-qualified electronic transmission of the information required to be stated on the certificate), or the payor holds a withholding certificate that is no longer reliable other than because the validity period as described in § 1.1441–1(e)(4)(ii)(A) has expired. In the case of a newly opened account, the grace period begins on the date that the payor first credits the account.

In the case of an existing account for which the payor holds a Form W–8 or documentary evidence of foreign status, the grace period begins on the date that the payor first credits the account after the existing documentation held with regard to the account can no longer be relied upon (other than because the validity period described in § 1.1441–1(e)(4)(ii)(A) has expired). A new account shall be treated as an existing account if the account holder already holds an account at the branch location at which the new account is opened. It shall also be treated as an existing account if an account is held at another branch location if the institution maintains a coordinated account

information system described in § 1.1441–1(e)(4)(ix). The grace period terminates on the earlier of the close of the 90th day from the date on which the grace period begins or the date that the documentation is provided. The grace period also terminates when the remaining balance in the account (due to withdrawals or otherwise) is equal to or less than 31 percent of the total amounts credited since the beginning of the grace period that would be subject to backup withholding if the provisions of this paragraph (d)(2)(ii) did not apply. At the end of the grace period, the payor shall treat the amounts credited to the account during the grace period as paid to a U.S. or foreign payee depending upon whether documentation has been furnished and the nature of any such documentation furnished upon which the payor may rely to treat the account as owned by a U.S. or foreign payee. If the documentation has not been received on or before the date of expiration of the grace period, the payor may also apply the presumptions described in this paragraph (d) to amounts credited to the account after the date on which the grace period expires (until such time as the payor can reliably associate the documentation with amounts credited). See § 31.6413(a)–3(a)(1)(iv) of this chapter for treating backup withheld amounts under section 3406 as erroneously withheld when the documentation establishing foreign status is furnished prior to the end of the calendar year in which backup withholding occurs. If the provisions of this paragraph (d)(2)(ii) apply, the provisions of § 31.3406(d)–3 of this chapter shall not apply. For purposes of this paragraph (d)(2)(ii), an account holder's reinvestment of gross proceeds of a sale into other instruments constitutes a withdrawal and a non-qualified electronic transmission of information on a withholding certificate is a transmission that is not in accordance with the provisions of § 1.1441–1(e)(4)(iv). See § 1.1092(d)–1 for a definition of the term *actively traded* for purposes of this paragraph (d)(2)(ii).

* * * * *

(3) *Payments to foreign intermediaries or flow-through entities*—(i) *Payments of amounts subject to withholding under chapter 3 of the Internal Revenue Code.* In the case of payments of amounts that the payor may treat as made to a foreign intermediary or flow-through entity in accordance with §§ 1.1441–1(b)(3)(ii)(C) and (b)(3)(v)(A), 1.1441–5(c) or (e) and that are subject to withholding under § 1.1441–2(a), the provisions of §§ 1.1441-1(b)(2)(v) and 1.1441–5(c)(1), (e)(2), and (3) shall apply (by applying the term *payor* instead of the term *withholding agent*) to identify the payee. If a payment of an amount subject to withholding cannot be reliably associated with valid documentation from a payee in accordance with § 1.1441–1(b)(2)(vii) the presumption rules of § 1.1441–1(b)(3)(v) and § 1.1441–5(d) and (e)(6) shall apply to determine the payees status for purposes of this section (and other sections of regulations under this chapter to which this paragraph (d)(3) applies).

(ii) *Payments of amounts not subject to withholding under chapter 3 of the Internal Revenue Code.* Except as provided in paragraph (d)(3)(iii) of this section, amounts that are not subject to withholding under chapter 3 of the Internal Revenue Code that the payor may treat as paid to a foreign intermediary or flow-through entity shall be treated as made to an exempt recipient described in § 1.6049–4(c) except to the extent that the payor has actual knowledge that any person for whom the intermediary or flow-through entity is collecting the payment is a U.S. person who is not an exempt recipient. In the case of such actual knowledge, the payor shall treat the payment that it knows is allocable to such U.S. person as a payment to a U.S. payee who is not an exempt recipient.

(iii) *Special rule for payments of certain short-term original issue discount and bank deposit interest*—(A) *General rule.* A payment of U.S. source deposit interest described in section 871(i)(2)(A) or 881(d)(3) or interest or original issue discount on the redemption of an obligation with a maturity from the date of issue of 183 days or less (short-term OID) described in section 871(g)(1)(B) or 881(e) that the payor may treat as paid to a foreign intermediary or flow-through entity in accordance with the provisions of § 1.1441-1(b)(3)(ii)(C) or (v)(A) shall be treated as paid to an undocumented U.S. payee that is not an exempt recipient under paragraph § 1.6049–4(c) unless the payor has documentation from the payees of the payment and the payment is allocated to foreign payees, as a group, and to each U.S. non-exempt recipient payee. See § 1.1441–1(e)(3)(iv)(C)(*2*).

(B) *Payee may be an intermediary.* If a payment is made to a person described in § 1.6049–4(c)(1)(ii) that has not provided an intermediary withholding certificate under § 1.1441–1(e)(3)(i) but the payor knows or has reason to know that the payee may be an intermediary, the payor must apply the rules of paragraph (d)(3)(iii)(A) of this section. A payor has reason to know that such a person may be an intermediary if that person has provided documentation under § 1.1441–3(b)(ii)(C) or (v)(A) for another account with the same payor.

(iv) *Short-term deposits and repurchase transactions.* The provisions of paragraph (d)(3)(ii) of this section and not paragraph (d)(3)(iii) of this section shall apply to deposits with banks and other financial institutions that remain on deposit for a period of two weeks or less, to amounts of original issue discount arising from a sale and repurchase transaction that is completed within a period of two weeks or less, or to amounts described in paragraphs (b)(7), (10) and (11) of this section (relating to certain obligations issued in bearer form).

(4) *Examples.* The rules of paragraphs (d)(1) through (3) of this section are illustrated by the following examples:

Example 1. (i) Facts. USP is a U.S. payor as defined in paragraph (c)(5) of this section. USP pays interest from sources within the United States to an account maintained in the United States by X. The interest is not deposit interest described in sections 871(i)(2)(A) or 881(d). USP does not have a withholding certificate from X as defined in § 1.1441–1(c)(16). Moreover, USP cannot treat X as an exempt recipient, as defined in § 1.6049–4(c)(1)(ii), without documentation and there is no indication that X is an individual, trust, or estate.

(ii) *Analysis.* The U.S. source interest is an amount subject to withholding as defined in § 1.1441–2(a). Under paragraph (d)(1) of this section, USP must apply the provisions of §§ 1.1441–1(b)(2) and 1.1441–5(c) and (e) to determine the payee of the interest. Under § 1.1441–1(b)(2)(i), X, the person to whom the payment is made, is considered to be the payee, unless X is determined to be a flow-through entity, in which case the rules of § 1.1441–5 apply to determine the payee. Under paragraph (d)(2)(i) of this section, the rules of § 1.1441–1(b)(3)(ii) apply to determine the classification of a payee as an individual, trust, estate, corporation, or partnership. Under § 1.1441–1(b)(3)(ii)(B), X is presumed to be a partnership, since X does not appear to be an individual, trust or estate, and X cannot be presumed to be an exempt recipient in the absence of documentation. Paragraph (d)(2)(i) of this section requires USP to apply the provisions of §§ 1.1441–1(b)(3)(iii) and 1.1441–5(d) to determine whether X is presumed to be a U.S. or foreign partnership. Under §§ 1.1441–1(b)(3)(iii) and 1.1441–5(d)(2), X is presumed to be

a U.S. partnership in absence of any indicia of foreign partnership status. The U.S. source interest paid to X is reportable under section 6049 on Form 1099 and the interest is subject to backup withholding under section 3406 because X has not provided its TIN on a valid Form W–9.

Example 2. (i) *Facts.* The facts are the same as in *Example 1,* except that the interest paid by USP is from sources outside the United States.

(ii) *Analysis.* Interest from sources outside the United States is not an amount subject to withholding, as defined in § 1.1441–2(a). Under paragraph (d)(1) of this section, USP must apply the provisions of §§ 1.1441–1(b)(2) and 1.1441–5(c) and (e) to determine the payee. Under § 1.1441–1(b)(2)(i), X, the person to whom the payment is made, is considered to be the payee, unless X is determined to be a flow-through entity, in which case the rules of § 1.1441–5(c) or (e) apply to determine the payee. Under paragraph (d)(2)(i) of this section, the rules of § 1.1441–1(b)(3)(ii) apply to determine the classification of a payee as an individual, trust, estate, corporation, or partnership. These rules apply irrespective of whether the payment is an amount subject to withholding. Under § 1.1441–1(b)(3)(ii)(B), X is presumed to be a partnership, since X does not appear to be an individual, trust or estate, and X cannot be presumed to be an exempt recipient in the absence of documentation. Paragraph (d)(2)(i) of this section requires USP to apply the provisions of §§ 1.1441–1(b)(3)(iii) and 1.1441–5(d) to determine whether, X is presumed to be a U.S. or foreign partnership. Under §§ 1.1441–1(b)(3)(iii) and 1.1441–5(d)(2), X is presumed to be a U.S. partnership in absence of any indicia of foreign partnership status. The foreign source interest is a payment subject to reporting on Form 1099 under § 1.6049–5(a). Further, because X is a non-exempt recipient that has failed to provide its TIN on a valid Form W–9, the foreign source interest is subject to backup withholding under section 3406.

Example 3. (i) Facts. USP is a U.S. payor as defined in paragraph (c)(5) of this section. USP makes a payment of U.S. source interest outside the United States to an offshore account of X. See paragraphs (c)(1) for a definition of offshore account and (e) for a payment outside the United States. USP does not have a withholding certificate from X as defined in § 1.1441–1(c)(16) nor does it have documentary evidence as described in § 1.1441–1(e)(1)(ii)(A)(2) and 1.6049–5(c)(1). (ii) *Analysis.* The interest is an amount subject to withholding as defined in § 1.1441–2(a). Under paragraph (d)(1) of this section, USP must apply the provisions of § 1.1441–1(b)(2) and § 1.1441–5(c) and (e) to determine the payee. Under § 1.1441–1(b)(2)(i), X, the person to whom the payment is made, is considered to be the payee, unless X is determined to be a flow-through entity, in which case the rules of § 1.1441–5(c) or (e) apply to determine the payee. Under paragraph (d)(2)(i) of this section, the rules of § 1.1441–1(b)(3)(ii) apply to determine the classification of a payee as an individual, trust, estate, corporation, or partnership. Under § 1.1441–1(b)(3)(ii)(B), X is presumed to be a partnership, since X does not appear to be an individual, trust or estate, and X cannot be presumed to be an exempt recipient in the absence of documentation. Paragraph (d)(2)(i) of this section requires USP to apply the provisions of §§ 1.1441–1(b)(3)(iii) and 1.1441–5(d) to determine whether, X is presumed to be a U.S. or foreign partnership. Under §§ 1.1441–1(b)(3)(iii)(D) and 1.1441–5(d)(2), X is presumed to be a foreign partnership. Therefore, under paragraph (d)(1) of this section and § 1.1441–5(c)(1)(i)(E), the payees of the interest are presumed to be the partners of X. Under § 1.1441–5(d)(3), the partners are presumed to be undocumented foreign persons. Therefore, USP must withhold 30 percent of the interest payment under § 1.1441–1(b)(1) and report the payment on Form 1042–S in accordance with § 1.1461–1(c).

Example 4. (i) Facts. The facts are the same as in Example 3, except that the interest is paid by F, a non-U.S. payor. (ii) *Analysis.* The analysis and result are the same as in *Example 3.* F is a withholding agent under § 1.1441–7 and its status as a non-U.S. payor under paragraph (c)(5) of this section is irrelevant.

Example 5. (i) *Facts.* USP is a U.S. payor as defined in paragraph (c)(5) of this section. USP makes a payment outside the United States of interest from sources outside the United States to an offshore account of X. USP does not have a withholding certificate from X as defined in § 1.1441–1(c)(16) nor does it have documentary evidence as described in §§ 1.1441–1(e)(1)(ii)(A)(*2*) and 1.6049–5(c)(1). USP does not have actual knowledge of an employer identification number for X. X does not appear to be an individual, trust, or estate and cannot be treated as an exempt recipient, as defined in § 1.6049–4(c)(1)(ii) in the absence of documentation.

(ii) *Analysis.* The interest is not an amount subject to withholding as defined in § 1.1441–2(a). Under paragraph (d)(1) of this section, USP must apply the rules of §§ 1.1441–1(b)(2) and 1.1441–5(c) and (e) to determine the payee of the interest. Under § 1.1441–1(b)(2)(i), X, the person to whom the payment is made, is considered to be the payee, unless X is determined to be a flow-through entity, in which case the rules of § 1.1441–5(c) or (e) apply to determine the payee. Under paragraph (d)(2)(i) of this section, § 1.1441–1(b)(3)(ii) applies to determine X's classification as an individual, trust, estate, corporation or partnership. Under § 1.1441–1(b)(3)(ii)(B), X is treated as a partnership, since it does not appear to be an individual, trust, or estate and cannot be treated as an exempt recipient without documentation. Paragraph (d)(2)(i) of this section requires USP to apply the provisions of §§ 1.1441–1(b)(3)(iii) and 1.1441–5(d) to determine whether, X is presumed to be a U.S. or foreign partnership. Paragraph (d)(2)(i) also states that the presumptions of foreign status for payments made to offshore accounts contained in §§ 1.1441–1(b)(3)(iii)(D) and 1.1441–5(d)(2) do not apply to amounts that are not subject to withholding. Therefore, under §§ 1.1441–1(b)(3)(iii) and 1.1441–5(d)(2), X is presumed to be a U.S. partnership because it does not have actual knowledge that X's employer identification number begins with the digits ''98.'' Therefore, USP must treat X as a U.S. person that is not an exempt recipient and report the payment on Form 1099 under section 6049. Under § 31.3406(g)–1(e) of this chapter, however, USP is not required to backup withhold on the payment unless it has actual knowledge that X is a U.S. person that is not an exempt recipient.

Example 6. (i) *Facts.* The facts are the same as in *Example 5,* except that the interest is paid by F, a non-U.S. payor, as defined under paragraph (c)(5) of this section.

(ii) *Analysis.* The analysis is the same as under *Example 5.* However, because F is a non-U.S. payor paying foreign source interest outside the United States, paragraph (b)(6) of this section exempts the payment from reporting under section 6049.

Example 7. (i) *Facts.* USP, a U.S. payor as defined in paragraph (c)(5) of this section, makes a payment of U.S. source interest to NQI, a foreign corporation and a nonqualified intermediary as defined in § 1.1441–1(c)(14). The interest is not deposit interest as defined in sections 871(i)(2)(A) and 881(d). The interest is paid inside the United States to an account maintained in the United States. NQI has provided USP with a nonqualified intermediary withholding certificate, as described in § 1.1441–1(e)(3)(iii), but has not attached any documentation from the persons on whose behalf it acts or a withholding statement as described in § 1.1441–1(e)(3)(iv).

(ii) *Analysis.* U.S. source interest is an amount subject to withholding under § 1.1441–2(a). USP may treat the payment as made to a foreign intermediary under § 1.1441–1(b)(3)(v)(A) because USP has received a nonqualified intermediary withholding certificate from NQI. Under paragraph (d)(3)(i) of this section, USP must apply § 1.1441–1(b)(2)(v) to determine the payees of the payment. Under § 1.1441–1(b)(2)(v)(A), USP must treat the persons on whose behalf NQI is acting as the payees. Paragraph (d)(3)(i) of this section also requires USP to apply the presumption rules of § 1.1441–1(b)(3)(v) if it cannot reliably associate the payment with valid documentation from a payee. See § 1.1441–1(b)(2)(vii). Under § 1.1441–1(b)(3)(v)(B), the interest is treated as paid to an unknown foreign payee because it cannot be reliably associated with documentation under § 1.1441–1(b)(2)(vii). Therefore, the payment is not subject to reporting on Form 1099 under paragraph (b)(12) of this section because the payment is presumed made to a foreign person. The payment is subject to withholding, however, under § 1.1441–1(b) at a rate of 30 percent and is subject to reporting on Form 1042–S under § 1.1461–1(c).

Example 8. (i) *Facts.* The facts are the same as in *Example 7,* except that the interest is paid outside the United States, as defined in paragraph (e) of this section to an offshore account, as defined in paragraph (c)(1) of this section.

(ii) *Analysis.* The analysis and results are the same as in *Example 7.* The rules of

§ 1.1441–1(b)(3)(v) apply irrespective of where the account is maintained or the payment made.

Example 9. (i) *Facts.* The facts are the same as in *Example 8,* except that the interest is paid by F, a non-U.S. payor, as defined in paragraph (c)(5) of this section.

(ii) *Analysis.* The analysis and results are the same as in *Example 7.*

Example 10. (i) USP, a U.S. payor as defined in paragraph (c)(5) of this section, makes a payment of foreign source interest to NQI, a foreign corporation and a nonqualified intermediary as defined in § 1.1441–1(c)(14). NQI has provided USP with a nonqualified intermediary withholding certificate, as described in § 1.1441–1(e)(3)(iii), but has not attached any documentation from the persons on whose behalf it acts or a withholding statement as described in § 1.1441–1(e)(3)(iv).

(ii) *Analysis.* Foreign source interest is not an amount subject to withholding under chapter 3 of the Internal Revenue Code. See § 1.1441–2(a). Under paragraph (d)(3)(ii)(A) of this section, amounts that are not subject to withholding under chapter 3 of the Internal Revenue Code that a payor may treat as paid to a foreign intermediary are treated as made to an exempt recipient described in § 1.6049–4(c). Therefore, the foreign source interest is not subject to reporting on Form 1099.

Example 11. (i) *Facts.* USP is a U.S. payor as defined in paragraph (c)(5) of this section. USP pays U.S. source original issue discount from the redemption of an obligation described in section 871(g)(1)(B) to NQI, a foreign corporation that is a nonqualified intermediary as defined in § 1.1441–1(c)(14). The redemption proceeds are paid to an account NQI has with USP in the United States. NQI provides a nonqualified intermediary withholding certificate as described in § 1.1441–1(e)(3)(iii) but does not attach any payee documentation or a withholding statement described in § 1.1441–1(e)(3)(iv).

(ii) *Analysis.* Under paragraph (d)(3)(ii)(A) of this section, USP must treat the payment as made to an undocumented U.S. payee that is not an exempt recipient and report the payment on Form 1099. Further, because the payment is made inside the United States, the exception to backup withholding for offshore accounts contained in § 31.3406(g)–1(e) of this chapter does not apply and the payment is subject to backup withholding.

Example 12. (i) Facts. P, a payor, makes a payment to NQI of U.S. source interest on debt obligations issued prior to July 18, 1984. Therefore, the interest does not qualify as portfolio interest under section 871(h) or 881(d). NQI is a nonqualified foreign intermediary, as defined in § 1.1441–1(c)(14), and has furnished P a valid nonqualified intermediary withholding certificate described in § 1.1441–1(e)(3)(iii) to which it has attached a valid Form W–9 for A, and two valid beneficial owner Forms W–8, one for B and one for C. A is not an exempt recipient under § 1.6049–4(c). NQI furnishes a withholding statement, described in § 1.1441–1(e)(3)(iv), in which it allocates 20 percent of the U.S. source interest to A, but does not allocate the remaining 80 percent of the interest between B and C. B's withholding certificate indicates that B is a foreign pension fund, exempt from U.S. tax under the U.S. income tax treaty with Country T. C's withholding certificate indicates that C is a foreign corporation not entitled to a reduced rate of withholding.

(ii) *Analysis.* Under paragraph (d)(3)(i) of this section, P applies the rules of § 1.1441–1(b)(2)(v) to determine the payees of the interest. Under that section, the payees are the persons on whose behalf NQI acts—A, B and C. Because P can reliably associate 20 percent of the payment with valid documentation provided by A, P must treat 20 percent of the interest as paid to A, a U.S. person not exempt from reporting, and report the payment on Form 1099. P cannot reliably associate the remaining 80 percent of the payment with valid documentation under § 1.1441–1(b)(2)(vii) and, therefore, under paragraph (d)(3)(i) of this section must apply the presumption rules of § 1.1441–1(b)(3)(v). Under that section, the interest is presumed paid to an unknown foreign payee. Under paragraph (b)(12) of this section, P is not required to report the interest presumed paid to a foreign person on Form 1099. Under § 1.1441–1(b), 80 percent of the interest is subject to 30 percent withholding, however, and the interest is reportable on Form 1042-S under § 1.1461–1(c).

Example 13. (i) *Facts.* The facts are the same as in Example 12, except that P can reliably associate 30 percent of the payment of interest to B, but cannot reliably associate the remaining 70 percent with A or C.

(ii) *Analysis.* Under paragraph (d)(3)(i) of this section, P applies the rules of § 1.1441–1(b)(2)(v) to determine the payees of the interest. Under that section, the payees are the persons on whose behalf NQI acts—A, B and C. Because P can reliably associate 30 percent of the payment with B, a foreign pensions fund exempt from withholding under an income tax treaty, P may treat that payment as paid to B and not subject to reporting on Form 1099 under paragraph (b)(12) of this section. P cannot reliably associate the remaining 70 percent of the payment with valid documentation under § 1.1441–1(b)(2)(vii) and, therefore, under paragraph (d)(3)(i) of this section must apply the presumption rules of § 1.1441–1(b)(3)(v). Under that section, the interest is presumed paid to an unknown foreign payee. Under paragraph (b)(12) of this section, P is not required to report the interest presumed paid to a foreign person on Form 1099. Under § 1.1441–1(b), 80 percent of the interest is subject to 30 percent withholding, however, and the interest is reportable on Form 1042-S under § 1.1461–1(c).

Example 14. (i) *Facts.* The facts are the same as in *Example 12,* except that P also makes a payment of foreign source interest to NQI.

(ii) *Analysis.* Under paragraph (d)(3)(ii)(A), P may treat the foreign source interest as paid to an exempt recipient as defined in § 1.6049–4(c) and not subject to reporting on Form 1099 even though some or all of the foreign source interest may in fact be owned by A, the U.S. person that is not exempt from reporting.

* * * * *

Parts 1 and 31 [Amended]

Par. 18. Effective January 1, 2001, in the list below, for each section indicated in the left column remove the language in the middle column and add the language in the right column:

Section	Remove	Add
1.1441–1(b)(1), first sentence	to a beneficial owner that is a U.S. person	to a payee that is a U.S. person.
1.1441–1(b)(2)(iii)(A), last sentence	1.1441–6(b)(4)	1.1441–6(b)(2).
1.1441–1(b)(2)(iii)(B), third sentence	1.1441–6(b)(4)	1.1441–6(b)(2).
1.1441–1(b)(2)(vi), second sentence	1.6049–5(c)(4)	1.6049–5(c)(1).
1.1441–1(b)(4)(iii), last sentence	§ 1.6049–5(c)(4)	§ 1.6049–5(c)(1).
1.1441–1(b)(4)(v), third sentence	§ 1.6049–5(c)(4)	§ 1.6049–5(c).
1.1441–1(b)(4)(xviii), third sentence	is required	is not required.
1.1441–1(b)(7)(i)(A)	§ 1.1441–4(a)(2)(i) or (3)	§ 1.1441–4(a)(2)(ii) or (3)(i).
1.1441–1(b)(7)(iii), first sentence	§ 1.1441–4(a)(2)(i) or (3)	§ 1.1441–4(a)(2)(ii) or (3)(i).
1.14441–1(b)(9), second sentence	a withholding certificate	an intermediary or flow-through withholding certificate.
1.1441–1(b)(9), second sentence	a U.S. beneficial owner	a U.S. payee.
1.1441–1(e)(1)(ii)(A)(*2*)	with respect to an offshore account	to an offshore account.
1.1441–1(e)(2)(i), fifth sentence	See § 1.1441–6(b)(4)(ii)	See § 1.1441–6(b)(2).
1.1441–1(e)(2)(ii), sixth sentence	See § 1.1441–6(b)(4)(i)	See § 1.1441–6(b).
1.1441–1(e)(4)(viii), introductory text, second sentence.	§ 1.1441–6(b)(2)(ii)	§ 1.1441–6(c)(2).
1.1441–1(e)(4)(viii), third sentence	§ 1.1441–6(b)(4)(ii)	§ 1.1441–6(b)(1).

Section	Remove	Add
1.1441–3(c)(2)(i), introductory text, second sentence.	estimate of earnings and profits,	estimates under this paragraph (c)(2).
1.1441–4(a)(3)(ii)	payment to a foreign financial institution (within the meaning of § 1.165–12(c)(1)(iv)) shall.	payment shall.
1.1441–4(a)(3)(ii)	counterparty	payee.
1.1441–7(b)(1), first sentence	is incorrect.	is unreliable or incorrect.
1.1441–7(b)(1), third sentence	contained in, or attached to, a withholding certificate.	contained in, or associated with, a withholding certificate.
1.1441–7(b)(1), third sentence	are not correct and	are incorrect or unreliable and.
1.1461–1(b)(2), first sentence	Form 1042X	Form 1042.
1.6045–1(j), first sentence	the end of the second calendar month following the close of the calendar year of such reporting period.	February 28 of the following calendar year.
1.6049–4(c)(1)(ii)(A), second sentence	meets the	meets one of the.
31.3406(h)–3(a), introductory text, first sentence.	the payee certifies	a payee that is a U.S. person certifies.

Robert E. Wenzel,

Deputy Commissioner of Internal Revenue.

Approved: May 5, 2000.

Jonathan Talisman,

Deputy Assistant Secretary of the Treasury.

[FR Doc. 00–11937 Filed 5–15–00; 8:45 am]

BILLING CODE 4830–01–U

Federal Register

Monday,
May 22, 2000

Part III

Environmental Protection Agency

40 CFR Part 261

Regulatory Determination on Wastes from the Combustion of Fossil Fuels; Final Rule

ENVIRONMENTAL PROTECTION AGENCY

40 CFR Part 261

[FRL–6588–1]

RIN 2050–AD91

Notice of Regulatory Determination on Wastes From the Combustion of Fossil Fuels

AGENCY: Environmental Protection Agency.

ACTION: Regulatory determination.

SUMMARY: This document explains EPA's determination of whether regulation of fossil fuel combustion wastes is warranted under subtitle C of the Resource Conservation and Recovery Act (RCRA). Today's action applies to all remaining fossil fuel combustion wastes other than high volume coal combustion wastes generated at electric utilities and independent power producing facilities and managed separately, which were addressed by a 1993 regulatory determination. These include: Large-volume coal combustion wastes generated at electric utility and independent power producing facilities that are co-managed together with certain other coal combustion wastes; coal combustion wastes generated by non-utilities; coal combustion wastes generated at facilities with fluidized bed combustion technology; petroleum coke combustion wastes; wastes from the combustion of mixtures of coal and other fuels (*i.e.*, co-burning); wastes from the combustion of oil; and wastes from the combustion of natural gas.

The Agency has concluded these wastes do not warrant regulation under subtitle C of RCRA and is retaining the hazardous waste exemption under RCRA section 3001(b)(3)(C). However, EPA has also determined national regulations under subtitle D of RCRA are warranted for coal combustion wastes when they are disposed in landfills or surface impoundments, and that regulations under subtitle D of RCRA (and/or possibly modifications to existing regulations established under authority of the Surface Mining Control and Reclamation Act (SMCRA)) are warranted when these wastes are used to fill surface or underground mines.

So that coal combustion wastes are consistently regulated across all waste management scenarios, the Agency also intends to make these national regulations for disposal in surface impoundments and landfills and minefilling applicable to coal combustion wastes generated at electric utility and independent power producing facilities that are not co-managed with low volume wastes,.

The Agency has concluded that no additional regulations are warranted for coal combustion wastes that are used beneficially (other than for minefilling) and for oil and gas combustion wastes. We do not wish to place any unnecessary barriers on the beneficial use of fossil fuel combustion wastes so that they can be used in applications that conserve natural resources and reduce disposal costs. Currently, about one-quarter of all coal combustion wastes are diverted to beneficial uses. We support increases in these beneficial uses, such as for additions to cement and concrete products, waste stabilization and use in construction products such as wallboard.

DATES: Comments in response to data and information requests in this document are due to EPA on September 19, 2000.

ADDRESSES: Public comments and supporting materials are available for viewing in the RCRA Information Center (RIC). In addition to the data and information that was included in the docket to support the RTC on FFC waste and the Technical Background Documents, the docket also includes the following document: Responses to Public Comments on the Report To Congress, Wastes from the Combustion of Fossil Fuels. The RIC is located at Crystal Gateway I, First Floor, 1235 Jefferson Davis Highway, Arlington, VA. The Docket Identification Number is F–2000–FF2F–FFFFF. The RIC is open from 9 a.m. to 4 p.m., Monday through Friday, excluding federal holidays. To review docket materials, we recommend that the public make an appointment by calling 703 603–9230. The public may copy a maximum of 100 pages from any regulatory docket at no charge. Additional copies cost $0.15/page. The index and some supporting materials are available electronically. See the **SUPPLEMENTARY INFORMATION** section for information on accessing them.

Commenters must send an original and two copies of their comments referencing docket number F–2000–FF2F–FFFFF to: (1) If using regular US Postal Service mail: RCRA Docket Information Center, Office of Solid Waste (5305G), U.S. Environmental Protection Agency Headquarters (EPA, HQ), Ariel Rios Building, 1200 Pennsylvania Avenue, NW., Washington, DC 20460–0002; or (2) if using special delivery, such as overnight express service: RCRA Docket Information Center (RIC), Crystal Gateway One, 1235 Jefferson Davis Highway, First Floor, Arlington, VA 22202. Comments may also be submitted electronically through the Internet to: *rcra-docket@epa.gov*. Comments in electronic format should also be identified by the docket number F–2000–FF2F–FFFFF and must be submitted as an ASCII file avoiding the use of special characters and any form of encryption.

Commenters should not submit electronically any confidential business information (CBI). An original and two copies of CBI must be submitted under separate cover to: RCRA CBI Document Control Officer, Office of Solid Waste (5305W), U.S. EPA, Ariel Rios Building, 1200 Pennsylvania Avenue, NW., Washington, DC 20460–0002.

FOR FURTHER INFORMATION CONTACT: For general information, contact the RCRA Hotline at 800 424–9346 or TDD 800 553–7672 (hearing impaired). In the Washington, DC, metropolitan area, call 703 412–9810 or TDD 703 412–3323.

For more detailed information on specific aspects of this regulatory determination, contact Dennis Ruddy, Office of Solid Waste (5306W), U.S. Environmental Protection Agency, Ariel Rios Building, 1200 Pennsylvania Avenue, NW, Washington, DC 20460–0002, telephone (703) 308–8430, e-mail address *ruddy.dennis@epa.gov*.

SUPPLEMENTARY INFORMATION: The index and several of the primary supporting materials are available on the Internet. You can find these materials at *<http://www.epa.gov/epaoswer/other/fossil/index.htm*.

The official record for this action will be kept in paper form. Accordingly, EPA will transfer all comments received electronically into paper form and place them in the official record, which will also include all comments submitted directly in writing. The official record is the paper record maintained at the address in **ADDRESSES** at the beginning of this notice.

EPA will not immediately reply to commenters electronically other than to seek clarification of electronic comments that may be garbled in transmission or during conversion to paper form, as discussed above.

The contents of today's notice are listed in the following outline:

1. General Information

A. What action is EPA taking today?

B. What is the statutory authority for this action?

C. What was the process EPA used in making today's decision?

D. What is the significance of ''uniquely associated wastes'' and what wastes does EPA consider to be uniquely associated wastes?

E. Who is affected by today's action and how are they affected?
F. What additional actions will EPA take after this regulatory determination regarding coal, oil and natural gas combustion wastes?
2. What Is the Basis for EPA's Regulatory Determination for Coal Combustion Wastes?
A. What is the Agency's decision regarding the regulatory status of coal combustion wastes and why did EPA make that decision?
B. What were EPA's tentative decisions as presented in the Report to Congress?
C. How did commenters react to EPA's tentative decisions and what was EPA's analysis of their comments?
D. What is the basis for today's decisions?
E. What approach will EPA take in developing national regulations?
3. What Is the Basis for EPA's Regulatory Determination for Oil Combustion Wastes?
A. What is the Agency's decision regarding the regulatory status of oil combustion wastes and why did EPA make that decision?
B. What were EPA's tentative decisions as presented in the Report to Congress?
C. How did commenters react to EPA's tentative decisions and what was EPA's analysis of their comments?
D. What is the basis for today's decisions?
4. What Is the Basis for EPA's Regulatory Determination for Natural Gas Combustion Wastes?
A. What is the Agency's decision regarding the regulatory status of natural gas combustion wastes and why did EPA make that decision?
B. What was EPA's tentative decision as presented in the Report to Congress?
C. How did commenters react to EPA's tentative decisions?
D. What is the basis for today's decisions?
5. What Is the History of EPA's Regulatory Determinations for Fossil Fuel Combustion Wastes?
A. On what basis is EPA required to make regulatory decisions regarding the regulatory status of fossil fuel combustion wastes?
B. What was EPA's general approach in making these regulatory determinations?
C. What happened when EPA failed to issue its determination of the regulatory status of the large volume utility combustion wastes in a timely manner?
D. When was the Part 1 regulatory decision made and what were EPA's findings?
6. Executive Orders and Laws Addressed in Today's Action
A. Executive Order 12866—Determination of Significance.
B. Regulatory Flexibility Act, as amended.
C. Paperwork Reduction Act (Information Collection Requests).
D. Unfunded Mandates Reform Act.
E. Executive Order 13132: Federalism.
F. Executive Order 13084: Consultation and Coordination with Indian Tribal Governments.
G. Executive Order 13045: Protection of Children from Environmental Health Risks and Safety Risks.
H. National Technology Transfer and Advancement Act of 1995.
I. Executive Order 12898: Environmental Justice.
J. Congressional Review Act.
7. How To Obtain more Information

1. General Information

A. What Action Is EPA Taking Today?

In today's action, we are determining that regulation of fossil fuel combustion (FFC) wastes under subtitle C of the Resource Conservation and Recovery Act (RCRA) is not warranted. This determination covers the following wastes:

- Large-volume coal combustion wastes generated at electric utility and independent power producing facilities that are co-managed together with certain other coal combustion wastes;
- Coal combustion wastes generated at non-utilities;
- Coal combustion wastes generated at facilities with fluidized bed combustion technology;
- Petroleum coke combustion wastes;
- Wastes from the combustion of mixtures of coal and other fuels (i.e., co-burning of coal with other fuels where coal is at least 50% of the total fuel);
- Wastes from the combustion of oil; and
- Wastes from the combustion of natural gas.

While these wastes remain exempt from subtitle C, we have further decided to establish national regulations under subtitle D of RCRA (RCRA sections 1008(a) and 4004(a)) for coal combustion wastes that are disposed in landfills or surface impoundments or used to fill surface or underground mines. For coal combustion wastes used as minefill, we will consult with the Office of Surface Mining in the Department of the Interior and thoroughly assess whether equivalent protectiveness could be achieved by using regulatory authorities available under the Surface Mining Control and Reclamation Act (SMCRA), as well as those afforded under the Resource Conservation and Recovery Act. We will consider whether RCRA subtitle D or SMCRA authorities or some combination of both are most appropriate to regulate the disposal of coal combustion wastes when used for minefill in surface and underground mines to ensure protection of human health and the environment. These standards will be developed through notice and comment rulemaking and in consultation with states and other stakeholders. These regulations will, in EPA's view, ensure that the trend towards improved management of coal combustion wastes over recent years will accelerate and will ensure a consistent level of protection of human health and the environment is put in place across the United States.

If, as a result of comments in response to this notice; the forthcoming analyses identified in this notice; or additional information garnered in the course of developing these national regulations; we find that there is a need for regulation under the authority of RCRA subtitle C, the Agency will revise this determination accordingly.

We recognize our decision to develop regulations under RCRA subtitle D (or, for minefilling, possibly under SMCRA) for the above-listed coal combustion wastes was not specifically identified as an option in our March 31, 1999 Report to Congress. Our final determination reflects our consideration of public comments received on the Report to Congress and other analyses that we conducted.

Today's decision was, in the Agency's view, a difficult one, given the many competing considerations discussed throughout today's notice. After considering all of the factors specified in RCRA section 8002(n), we have decided as discussed further below, that the decisive factors are the trends in present disposal and utilization practices (section 8002 (n)(2)), the current and potential utilization of the wastes (Section 8002 (n)(8), and the admonition against duplication of efforts by other federal and state agencies.

As described in the Report to Congress, the utility industry has made significant improvements in its waste management practices over recent years, and most state regulatory programs are similarly improving. For example, in the utility industry the use of liners and groundwater monitoring at landfills and surface impoundments has increased substantially over the past 15 years as indicated in the following table.

PERCENT OF UTILITY COAL COMBUSTION WASTE MANAGEMENT UNITS WITH CONTROLS IN 1995

Waste management unit	Liners		Groundwater monitoring	
	Percent of all units	Percent of new units *	Percent of all units	Percent of new units *
Landfills	57	75	85	88
Surface Impoundments	26	60	38	65

* New units constructed between 1985–1995.
Source: USWAG, EPRI 1995.

Public comments and other analyses, however, have convinced us that these wastes could pose risks to human health and the environment if not properly managed, and there is sufficient evidence that adequate controls may not be in place—for example, while most states can now require newer units to include liners and groundwater monitoring, 62% of existing utility surface impoundments do not have groundwater monitoring. This, in our view, justifies the development of national regulations. We note, however, that some waste management units may not warrant liners and/or groundwater monitoring, depending on site-specific characteristics.

New information we received in public comments includes additional documented damage cases, as well as cases indicating at least a potential for damage to human health and the environment. We did not independently investigate these damage cases; rather, we relied on information contained in state files. While the absolute number of documented damage cases is not large, we have considered the evidence of proven and potential damage in light of the proportion of facilities that lack basic environmental controls (*e.g.,* groundwater monitoring). We acknowledge, moreover, that our inquiry into the existence of damage cases was focused primarily on a subset of states—albeit states that account for almost 20 percent of coal fired utility electricity generation capacity. Given the volume of coal combustion wastes generated nationwide (115 million tons) and the numbers of facilities that currently lack some basic environmental controls, especially groundwater monitoring, other cases of proven and potential damage are likely to exist. Because EPA did not use a statistical sampling methodology to evaluate the potential for damage, the Agency is unable to determine whether the identified cases are representative of the conditions at all facilities and, therefore, cannot quantify the extent and magnitude of damages at the national level.

Since the Report to Congress, we have conducted additional analyses of the potential for the constituents of coal combustion wastes to leach in dangerous levels into ground water. Based on a comparison of drinking water and other appropriate standards to leach test data from coal combustion waste samples, we identified a potential for risks from arsenic that we cannot dismiss at this time. This conclusion is based on possible exceedences of a range of values that EPA is currently considering for a revised arsenic MCL. Once a new arsenic MCL is established, additional groundwater modeling may be required to evaluate the likelihood of exceeding that MCL.

As discussed further below, in light of certain comments received on the Report to Congress, we are not relying on a quantitative groundwater risk assessment to assess potential risks to human health or the environment. In the absence of a more complete groundwater risk assessment, we are unable at this time to draw quantitative conclusions regarding the risks due to arsenic or other contaminants posed by improper waste management. Once we have completed a review of our groundwater model and made any necessary changes, we will reevaluate groundwater risks and take appropriate regulatory actions. We will specifically assess new modeling results as they relate to any promulgated changes in the arsenic MCL.

We acknowledge that, even without federal regulatory action, many facilities in the utility industry have either voluntarily instituted adequate environmental controls or have done so at the direction of states that regulate these facilities. In addition, we found that for the proven damage cases, the states (and in two cases, EPA under the Superfund program) have taken action to mitigate risk and require corrective action. However, in light of the evidence of actual and potential environmental releases of metals from these wastes; the large volume of wastes generated from coal combustion; the proportion of existing and even newer units that do not currently have basic controls in place; and the presence of hazardous constituents in these wastes; we believe, on balance, that the best means of ensuring that adequate controls are imposed where needed is to develop national subtitle D regulations. As we develop and issue the national regulations, we will try to minimize disruptions to operation of existing waste management units.

In taking today's action, we carefully considered whether to develop national regulations under RCRA subtitle D or subtitle C authorities. One approach we considered was to promulgate regulations pursuant to subtitle C authority, similar to recently proposed regulations applicable to cement kiln dust. Under this approach, EPA would have established national management standards for coal combustion wastes managed in landfills and surface impoundments and used for minefilling, as well as a set of tailored subtitle C requirements, promulgated pursuant to RCRA section 3004(x). If wastes were properly managed in accordance with subtitle D-like standards, they would not be classified as a hazardous waste. If wastes were not properly managed, they would become listed hazardous wastes subject to tailored subtitle C standards. This approach would give EPA enforcement authority in states following their adoption of the contingent management listing.

We believe, however, for the reasons described below, the better approach at this time to ensuring adequate management of FFC wastes is to develop national regulations under subtitle D rather than subtitle C. EPA has reached this conclusion in large part based on consideration of ''present disposal and utilization practices.'' RCRA § 8002(n). As noted above, present disposal practices in landfills and surface impoundments are significantly better than they have been in the past in terms of imposing basic environmental controls such as liners and groundwater monitoring. This trend is the result of increasing regulatory oversight by states of the management of these wastes as well as voluntary industry improvements. In the 1980's, only 11

states had authority to require facilities to install liners, and 28 states had the authority to require facilities to conduct groundwater monitoring at landfills. As of 1995, these rates were significantly higher, with 43 states having the authority to require liners and 46 states having the authority to require groundwater monitoring at landfills. When authority under state groundwater and drinking water regulations are considered, some commenters have suggested that nearly all states can address the management of these wastes. Thus, with the exception of relatively few states, the regulatory infrastructure is generally in place at the state level to ensure adequate management of these wastes.

While the trend both in terms of state regulatory authorities and the imposition of controls at these facilities has been positive, between 40 and 70 percent of sites lacked controls such as liners and/or groundwater monitoring as of 1995. This gap is of environmental concern given the potential for risks posed by mismanagement of coal combustion wastes in certain circumstances. Nonetheless, given most of the states' current regulatory capabilities and the evidence that basic controls are increasingly being put in place by the states and facilities (see RCRA section 8002(n), which directs EPA to consider actions of state and other federal agencies with a view to avoiding duplication of effort), EPA believes that subtitle D controls will provide sufficient clarity and incentive for states to close the remaining gaps in coverage, and for facilities to ensure that their wastes are managed properly.

For minefilling, although we have considerable concern about certain current practices (*e.g.,* placement directly into groundwater) we have not yet identified a case where placement of coal wastes can be determined to have actually caused increased damage to ground water. In addition, there is a federal regulatory program—SMCRA—expressly designed to address environmental risks associated with coal mines. Finally, given that states have been diligent in expanding and upgrading programs, as they have done for surface impoundments and landfills, we believe they will be similarly responsive in addressing environmental concerns arising from this emerging practice. In short, we arrive at the same conclusions, for substantially the same reasons, for this practice as we did for landfills and surface impoundments: that subtitle D controls, or upgraded SMCRA controls or a combination of the two, should provide sufficient clarity and incentive to ensure proper handling of this waste. Having determined that subtitle C regulation is not warranted for all other management practices, EPA does not see a basis in the record for carving this one practice out for separate regulatory treatment.

Once these regulations are effective, facilities would be subject to citizen suits for any violation of the standards. If EPA were addressing wastes that had not been addressed by the states (or the federal government) in the past, or an industry with wide evidence of irresponsible solid waste management practices, EPA may well conclude that the additional incentives for improvement and compliance provided by the subtitle C scheme—the threat of federal enforcement and the stigma associated with improper management of RCRA subtitle C waste—were necessary. But the record before us indicates that the structure and the sanctions associated with a subtitle D approach (or a SMCRA approach if EPA determines it is equivalent) should be sufficient.

We also see a potential downside to pursuing a subtitle C approach. Section 8002(n)(8) directs us to consider, among other factors, ''the current and potential utilization of such materials.'' Industry commenters have indicated that they believe subjecting any coal combustion wastes to a subtitle C regime would place a significant stigma on these wastes, the most important effect being that it would adversely impact beneficial reuse. As we understand it, the concern is that, even though beneficially reused waste would not be hazardous under the contemplated subtitle C approach, the link to subtitle C would nonetheless tend to discourage purchase and re-use of the waste. We do not wish to place any unnecessary barriers on the beneficial uses of these wastes, because they conserve natural resources, reduce disposal costs and reduce the total amount of waste destined for disposal. States and industry have also expressed concern that regulation under subtitle C could cause a halt in the use of coal combustion wastes to reclaim abandoned and active mine sites. We recognize that when done properly, minefilling can lead to substantial environmental benefits. EPA believes the contingent management scheme we discussed should diminish any stigma that might be associated with the subtitle C link. Nonetheless, we acknowledge the possibility that the approach could have unintended consequences. We would be particularly concerned about any adverse effect on the beneficial re-use market for these wastes because more than 23 percent (approximately 28 million tons) of the total coal combustion waste generated each year is beneficially reused and an additional eight percent (nine million tons) is used for minefilling. EPA believes that such reuse when performed properly, is by far the environmentally preferable destination for these wastes, including when minefilled. Normally, concerns about stigma are not a deciding factor in EPA's decisions under RCRA, given the central concern under the statute for protection of human health and the environment. However, given our conclusion that the subtitle D approach here should be fully effective in protecting human health and the environment, and given the large and salutary role that beneficial reuse plays for this waste, concern over stigma is a factor supporting our decision today that subtitle C regulation is unwarranted in light of our decision to pursue a subtitle D approach.

Additionally, in a 1993 regulatory determination, EPA previously addressed large volume coal combustion wastes generated at electric utility and independent power producing facilities that manage the wastes separately from certain other low volume and uniquely associated coal combustion wastes (see 58 FR 42466; August 9, 1993). Our 1993 regulatory determination maintained the exemption of these large volume coal combustion wastes from being regulated as hazardous wastes when managed separately from other wastes (e.g., in monofills). We intend that the national subtitle D regulations we develop for the coal combustion wastes subject to today's regulatory determination will also be applicable to the wastes covered in the 1993 regulatory determination for the reasons listed below, so that all coal combustion wastes are consistently regulated for placement in landfills, surface impoundments, and minefills.

- The co-managed coal combustion wastes that we studied extensively in making today's regulatory determination derive their characteristics largely from these large-volume wastes and not from the other wastes that are co-managed with them.
- We believe that the risks posed by the co-managed coal combustion wastes result principally from the large-volume wastes.
- These large-volume coal combustion wastes, account for over 20% of coal combustion wastes.

As we proceed with regulation development, we will also take enforcement action under RCRA section 7003 when we identify cases of imminent and substantial endangerment. We will also use Superfund remedial and emergency

response authorities under the Comprehensive Environmental Response Compensation and Liabilities Act (CERCLA), as appropriate, to address damages that result in risk to human health and the environment.

However, as stated above, this decision was a difficult one and EPA believes that, absent our conclusions regarding the current trends in management of this waste, the waste might present sufficient potential threat to human health and the environment to justify subtitle C regulation. There are several factors that might cause us to rethink our current determination. First, and perhaps most importantly, if current trends toward protective management do not continue, EPA may well determine that subtitle C regulation is warranted for this waste. As we have stated, we do not believe the current gaps in the basic controls are acceptable, and our determination that subtitle C regulation is not warranted is premised to a large extent on our conclusion that subtitle D regulation will be sufficient to close these gaps. If this conclusion turns out not to be warranted, we would be inclined to re-examine our current decision.

Second, EPA will continue to examine available information and, as a result of the ongoing review, may conclude over the next several months that this decision should be revised. Our ongoing review will include consideration of: (1) The extent to which fossil fuel combustion wastes have caused actual or potential damage to human health or the environment; (2) the environmental effects of filling underground and surface coal mines with fossil fuel combustion wastes; and (3) the adequacy of existing state and/or federal regulation of these wastes. Finally, the agency will consider the results of a report of the National Academy of Sciences regarding the adverse human health effects of mercury, one of the constituents in fossil fuel combustion wastes. EPA believes that this report will enhance our understanding of the risks due to exposure to mercury. All of these efforts may result in a subsequent revision of today's regulatory determination.

Finally, relating to oil combustion wastes, we will work with relevant stakeholders so that any necessary measures are taken to ensure that oil combustion wastes currently managed in the two known remaining unlined surface impoundments are managed in a manner that protects human health and the environment.

B. What Is the Statutory Authority for This Action?

We are issuing today's notice under the authority of RCRA section 3001 (b)(3)(C), as amended. This section exempts certain wastes, including fossil fuel combustion wastes, from hazardous waste regulation until the Agency completes a Report to Congress mandated by RCRA section 8002 (n) and maintains the exemption, unless the EPA Administrator makes a determination that subtitle C (hazardous waste) regulation is warranted. RCRA section 3004 (x) provides the Agency with flexibility in developing subtitle C standards. If appropriate, these formerly exempted wastes may not be subjected to full subtitle C requirements in areas such as treatment standards, liner design requirements and corrective action.

C. What Was the Process EPA Used in Making Today's Decision?

1. What Approach Did EPA Take to Studying Fossil Fuel Combustion Wastes?

We conducted our study of wastes generated by the combustion of fossil fuels in two phases. The first phase, called the Part 1 determination, covered high volume coal combustion wastes (*e.g.,* bottom ash and fly ash) generated at electric utility and independent power producing facilities (non-utility electric power producers that are not engaged in any other industrial activity) and managed separately from other fossil fuel combustion wastes. In 1993, EPA issued a regulatory determination that exempted Part 1 wastes from regulation as hazardous wastes (see 58 FR 42466; August 9, 1993). Today's regulatory determination is the second phase of our effort, or the Part 2 determination. It covers all other fossil fuel combustion wastes not covered in Part 1. This includes high volume, utility-generated coal combustion wastes when co-managed with certain low volume wastes that are also generated by utility coal burners; coal combustion wastes generated by industrial, non-utility, facilities; and wastes from the combustion of oil and gas. Under court order, we are required to complete the Part 2 regulatory determination by April 25, 2000. [1]

[1] The consent decree entered into by EPA *(Frank Gearhart, et al.* v. *Browner, et al.,* No. 91–2435 (D.D.C.) for completing the studies and regulatory determination for fossil fuel combustion wastes used the term ''remaining wastes'' to differentiate the wastes to be covered in today's decision from the large-volume utility coal combustion wastes that were covered in the August 1993 regulatory determination (see 58 FR 42466).

2. What Statutory Requirements Does EPA Have To Meet in Making Today's Regulatory Determinations?

RCRA section 8002(n) specifies eight study factors that we must take into account in our decision-making. These are:

1. The source and volumes of such materials generated per year.
2. Present disposal practices.
3. Potential danger, if any, to human health and the environment from the disposal of such materials.
4. Documented cases in which danger to human health or the environment has been proved.
5. Alternatives to current disposal methods.
6. The costs of such alternatives.
7. The impact of those alternatives on the use of natural resources.
8. The current and potential utilization of such materials.

Additionally, in developing the Report to Congress, we are directed to consider studies and other actions of other federal and State agencies with a view toward avoiding duplication of effort (RCRA section 8002(n)). In addition to considering the information contained in the Report, EPA is required to base its regulatory determination on information received in public hearings and comments submitted on the Report to Congress (RCRA section 3001(b)(3)(C)).

3. What Were the Agency's Sources of Information and Data That Serve as the Basis for This Decision?

We gathered publicly available information from a broad range of sources, including federal and state agencies, industry trade groups, environmental organizations, and open literature searches. We requested information from all stakeholder groups on each of the study factors Congress requires us to evaluate. For many of the study factors, very limited information existed prior to this study. We worked closely with the Edison Electric Institute (EEI), Utility Solid Waste Activities Group (USWAG), the Electric Power Research Institute (EPRI), and the Council of Industrial Boiler Owners (CIBO) as those organizations developed new information. Because other ongoing EPA projects currently focus on portions of the FFC waste generator universe, we also leveraged data collection efforts conducted for air, industrial waste, and hazardous waste programs. In addition, we obtained information from environmental organizations regarding beneficial uses of some FFC wastes and methods for characterizing the risks associated with FFC wastes.

Specifically, we gathered and analyzed the following information from industry, states and environmental groups:

- Published and unpublished materials obtained from state and federal agencies, utilities and trade industry groups, and other knowledgeable parties on the volumes and characteristics of coal, oil, and natural gas combustion wastes and the corresponding low-volume and uniquely associated wastes (see the following section for a description of ''uniquely associated wastes'').
- Published and unpublished materials on waste management practices (including co-disposal and re-use) associated with FFC wastes and the corresponding low-volume and uniquely associated wastes.
- Published and unpublished materials on the potential environmental impacts associated with FFC wastes.
- Published and unpublished materials on trends in utility plant operations that may affect waste volumes and characteristics. We gathered specific information on innovations in scrubber use and the potential impacts of the 1990 Clean Air Act Amendments on waste volumes and characteristics.
- Energy Information Agency (EIA), Department of Energy, data on utility operations and waste generation obtained from EIA's Form 767 database. These data are submitted to EIA annually by electric utilities.
- Site visit reports and accompanying facility submittals for utility and non-utility plants we visited during the study.
- Materials obtained from public files maintained by State regulatory agencies. These materials focus on waste characterization, waste management, and environmental monitoring data, along with supporting background information.

We visited five states to gather specific information about state regulatory programs, FFC waste generators, waste management practices and candidate damage cases related to fossil fuel combustion. The five states we examined in great detail were: Indiana, Pennsylvania, North Carolina, Wisconsin, and Virginia. These five states account for almost 20 percent of coal-fired utility electrical generation capacity.

We also performed a variety of analyses, including human health and ecological risk assessments, analyses of existing federal and state regulatory programs, and economic impact analyses. We discussed and shared these results with all of our stakeholders. We also conducted an external peer review of our risk analysis.

4. What Process Did EPA Follow To Obtain Comments on the Report to Congress?

RCRA requires that we publish a Report to Congress (RTC) evaluating the above criteria. Further, within six months of submitting the report, we must, after public hearings and opportunity for comment, decide whether to retain the exemption from hazardous waste requirements or whether regulation as hazardous waste is warranted. On March 31, 1999, we issued the required RTC on those fossil fuel combustion wastes (coal, oil and gas) not covered in the Part 1 regulatory determination, which are also known as the ''remaining wastes'' (see footnote 1).

We asked the public to comment on the Report and the appropriateness of regulating fossil fuel wastes under subtitle C of RCRA. To ensure that all interested parties had an opportunity to present their views, we held a public meeting with stakeholders on May 21, 1999. The April 28, 1999 **Federal Register** notice provided a 45-day public comment period, until June 14, 1999. We received over 150 requests to extend the public comment period by up to six months. However, we were obligated by a court-ordered deadline to issue our official Regulatory Determination by October 1, 1999. (See 64 FR 31170; June 10, 1999.) In response to requests for an extension, we entered into discussions with the parties to consider an extension of the comment period to ensure that all interested members of the public had sufficient time to complete their review and submit comments. Subsequently, the plaintiffs in *Gearhart* v. *Reilly* moved to modify the consent decree to reopen the comment period and to allow EPA until March 10, 2000 to complete the Regulatory Determination. We supported the motion, and on September 2, 1999, the Court granted the motion. In compliance with the court order, on September 20, 1999, we announced that public comments would be accepted through September 24, 1999 (64 FR 50788; Sept. 20, 1999). We have since received two extensions to the date for the final determination. Currently, EPA is directed to issue the Part 2 regulatory determination by April 25, 2000.

We received about 220 comments on the RTC from the public hearing and our **Federal Register** requests for comments. The docket for this action (Docket No. F–99–FF2P–FFFFF) contains all individual comments presented in the public meetings and hearing, and a transcript from the public hearing, and all written comments. The docket is available for public inspection. Today's decision is based on the RTC, its underlying data and analyses, public comments, and EPA analyses of these comments.

The comments covered a wide variety of topics discussed in the Report to Congress, such as fossil fuel combustion waste generation and characteristics; current and alternative practices for managing FFC waste; documented damage cases and potential danger to human health and the environment; existing regulatory controls on FFC waste management; cost and economic impacts of alternatives to current management practices; FFC beneficial use practices; and our review of applicable state and federal regulations.

D. What Is the Significance of ''Uniquely Associated Wastes'' and What Wastes Does EPA Consider To Be ''Uniquely Associated Wastes?'

Facilities that burn fossil fuels generate combustion wastes and also generate other wastes from processes that are related to the main fuel combustion processes. Often, as a general practice, facilities co-dispose these wastes with the large volume wastes that are subject to the RCRA section 3001 (b) (3) (C) exemption. Examples of these related wastes are:

- Precipitation runoff from the coal storage piles at the facility.
- Waste coal or coal mill rejects that are not of sufficient quality to burn as fuel.
- Wastes from cleaning the boilers used to generate steam.

There are numerous wastes like these, collectively known as ''low-volume'' wastes. Further, when one of these low-volume wastes, during the course of generation or normal handling at the facility, comes into contact with either fossil fuel (*e.g.,* coal, oil) or fossil fuel combustion waste (*e.g.,* coal ash or oil ash) and it takes on at least some of the characteristics of the fuel or combustion waste, we call it a ''uniquely associated'' waste. When uniquely associated wastes are co-managed with fossil fuel combustion wastes, they fall within the coverage of today's regulatory determination. When managed separately, uniquely associated wastes are subject to regulation as hazardous waste if they are listed wastes or exhibit the characteristic of a hazardous waste (see 40 CFR 261.20 and 261.30, which specify when a solid waste is considered to be a hazardous waste).

The Agency recognizes that determining whether a particular waste

is uniquely associated with fossil fuel combustion involves an evaluation of the specific facts of each case. In the Agency's view, the following qualitative criteria should be used to make such determinations on a case-by-case basis:

(1) Wastes from ancillary operations are not ''uniquely associated'' because they are not properly viewed as being ''from'' fossil fuel combustion.

(2) In evaluating a waste from non-ancillary operations, one must consider the extent to which the waste originates or derives from the fossil fuels, the combustion process, or combustion residuals, and the extent to which these operations impart chemical characteristics to the waste.

The low-volume wastes that are not uniquely associated with fossil fuel combustion would not be subject to today's regulatory determination. That is, they would not be accorded an exemption from RCRA subtitle C, whether or not they were co-managed with any of the exempted fossil fuel combustion wastes. Instead, they would be subject to the RCRA characteristic standards and hazardous waste listings. The exemption applies to mixtures of an exempt waste with a non-hazardous waste, but when an exempt waste is mixed with a hazardous waste, the mixture is not exempt.

Based on our identification and review of low volume wastes associated with the combustion of fossil fuels, we are considering offering the following guidance concerning which low volume wastes are uniquely associated with and which are not uniquely associated with fossil fuel combustion. Unless there are some unusual site-specific circumstances, we would generally consider that the following lists of low volume wastes are uniquely and non-uniquely associated wastes:

Uniquely Associated

- Coal Pile Runoff
- Coal Mill Rejects and Waste Coal
- Air Heater and Precipitator Washes
- Floor and Yard Drains and Sumps
- Wastewater Treatment Sludges
- Boiler Fireside Chemical Cleaning Wastes

Not Uniquely Associated

- Boiler Blowdown
- Cooling Tower Blowdown and Sludges
- Intake or Makeup Water Treatment and Regeneration Wastes
- Boiler Waterside Cleaning Wastes
- Laboratory Wastes
- General Construction and Demolition Debris
- General Maintenance Wastes

Moreover, we do not generally consider spillage or leakage of materials used in the processes that generate these non-uniquely associated wastes, such as boiler water treatment chemicals, to be uniquely associated wastes, even if they occur in close proximity to the fossil fuel wastes covered by this regulatory determination.

An understanding of whether a waste is uniquely associated can be important in one circumstance. If a waste is not uniquely associated and is a hazardous waste, co-managment with a Bevill waste will result in loss of the Bevill exemption. As a general matter, the wastes identified above as potentially not uniquely associated do not tend to be hazardous. This issue may therefore not be critical. The Agency, however, must still define appropriate boundaries for the Bevill exemption, because there is no authority to grant Bevill status to wastes that are not uniquely associated—the exemption was not intended as an umbrella for wastes that other industries must treat as hazardous.

EPA solicits comment on this discussion of uniquely associated wastes in the context of fossil fuel combustion and will issue final guidance after reviewing and evaluating information we receive as a result of this request.

E. Who Is Affected by Today's Action and How Are They Affected?

As explained above, fossil fuel combustion wastes generated from the combustion of coal, oil and natural gas will continue to remain exempt from being regulated as hazardous wastes under RCRA. No party is affected by today's determination to develop regulations applicable to coal combustion wastes when they are land disposed or used to fill surface or underground mines because today's action does not impose requirements. However, if such regulations are promulgated, they would affect coal combustion wastes subject to today's regulatory determination as well as wastes covered by the Part 1 regulatory determination when they are disposed in landfills and surface impoundments, or when used to fill surface or underground mines.

While we do not intend that national subtitle D regulations would be applicable to oil combustion wastes, we intend to work with relevant stakeholders so that any necessary measures are taken to ensure that oil combustion wastes currently managed in the two known remaining unlined surface impoundments are managed in a manner that protects human health and the environment.

F. What Additional Actions Will EPA Take After this Regulatory Determination Regarding Coal, Oil and Natural Gas Combustion Wastes?

To ensure that entities who generate and/or manage fossil fuel combustion wastes provide long-term protection of human health and the environment, we plan several actions:

- We will review comments submitted in response to today's notice on uniquely associated wastes and on the adequacy of the guidance developed by the utility industry on co-management of mill rejects (pyrites) with large volume coal combustion wastes.
- We will work with the State of Massachusetts and the owners and operators of the remaining two oil combustion facilities that currently manage their wastes in unlined surface impoundments to ensure that any necessary measures are taken so these wastes are managed in a manner that protects human health and the environment (described in section 3.D. of this document).
- We are evaluating the groundwater model and modeling methods that were used in the RTC to estimate risks for these wastes. This review may result in a re-evaluation of the potential groundwater risks posed by the management of fossil fuel combustion wastes and action to revise our Part 1 and Part 2 determinations if appropriate (see section 2.C. of this document).
- There are a number of ongoing and evolving efforts underway at EPA to improve our understanding of the human health impacts of wastes used in agricultural settings. We expect to receive substantial comments and new scientific information based on a risk assessment of the use of cement kiln dust as a substitute for agricultural lime (see 64 FR 45632; August 20, 1999) and other Agency efforts. As a result, we may refine our methodology for assessing risks related to the use of wastes in agricultural settings. If these efforts lead us to a different understanding of the risks posed by fossil fuel combustion wastes when used as a substitute for agricultural lime, we will take appropriate action to reevaluate today's regulatory determination (see section 2.C. of this document).
- We will review the findings and recommendations of the National Academy of Sciences upcoming report on mercury and assess its implications on risks due to exposure to mercury. We will ensure that the regulations we develop as a result of today's regulatory determination address any additional

risks posed by these wastes if hazardous constituent levels exceed acceptable levels

- We will reevaluate risk posed by managing coal combustion solid wastes if levels of mercury or other hazardous constituents change due to any future Clean Air Act air pollution control requirements for coal burning utilities (see section 2.C. of this document).
- We will continue EPA's partnership with the states to finalize voluntary industrial solid waste management guidance that identifies baseline protective practices for industrial waste management units, including fossil fuel combustion waste management units. We will use relevant information and knowledge that we obtain as a result of this effort to assist us in developing national regulations applicable to coal combustion wastes.

2. What Is the Basis for EPA's Regulatory Determination for Coal Combustion Wastes?

A. What Is the Agency's Decision Regarding the Regulatory Status of Coal Combustion Wastes and Why Did EPA Make That Decision?

We have determined at this time that regulation of coal combustion wastes under subtitle C is not warranted. However, we have also decided that it is appropriate to establish national regulations under non-hazardous waste authorities for coal combustion wastes that are disposed in landfills and surface impoundments. We believe that subtitle D regulations are the most appropriate mechanism for ensuring that these wastes disposed in landfills and surface impoundments are managed safely.

EPA's conclusion that some form of national regulation is warranted to address these wastes is based on the following considerations: (a) The composition of these wastes could present danger to human health and the environment under certain conditions, and ''potential'' damage cases identified by EPA and commenters, while not definitively demonstrating damage from coal combustion wastes, may indicate that these wastes have the potential to pose such danger; (b) we have identified eleven documented cases of proven damages to human health and the environment by improper management of these wastes in landfills and surface impoundments; (c) present disposal practices are such that, in 1995, these wastes were being managed in 40 percent to 70 percent of landfills and surface impoundments without reasonable controls in place, particularly in the area of groundwater monitoring; and (d) while there have been substantive improvements in state regulatory programs, we have also identified gaps in state oversight.

When we considered a tailored subtitle C approach, we estimated the potential costs of regulation of coal combustion wastes (including the utility coal combustion wastes addressed in the 1993 Part 1 determination) to be $1 billion per year. While large in absolute terms, we estimate that these costs are less than 0.4 percent of industry sales. To improve our estimates we solicit public comment on the potential compliance costs to coal combustion waste generators as well as the indirect costs to users of these combustion by-products.

We have also decided that it is appropriate to establish national regulations under RCRA non-hazardous waste authorities (and/or possibly modifications to exiting regulations established under authority of SMCRA) applicable to the placement of coal combustion wastes in surface or underground mines. We have reached this decision because (a) we find that these wastes when minefilled could present a danger to human health and the environment under certain circumstances, and (b) there are few states that currently operate comprehensive programs that specifically address the unique circumstances of minefilling, making it more likely that damage to human health or the environment could go unnoticed.

With the exception of minefilling as described above, we have decided that national regulation under subtitle C or subtitle D is not warranted for any of the other beneficial uses of coal combustion wastes. We have reached this decision because: (a) We have not identified any other beneficial uses that are likely to present significant risks to human health or the environment; and (b) no documented cases of damage to human health or the environment have been identified. Additionally, we do not want to place any unnecessary barriers on the beneficial uses of coal combustion wastes so they can be used in applications that conserve natural resources and reduce disposal costs.

B. What Were EPA's Tentative Decisions as Presented in the Report to Congress?

On March 31, 1999, EPA indicated a preliminary decision that disposal of coal combustion wastes should remain exempt from regulation under RCRA subtitle C. We also presented our tentative view that most beneficial uses of these wastes should remain exempt from regulation under RCRA subtitle C. However, in the RTC we identified three situations where we had particular concerns with the disposition or uses of these wastes.

First, we indicated some concern with the co-management of mill rejects (''pyrites'') with coal combustion wastes which, under certain circumstances, could cause or contribute to ground water contamination or other localized environmental damage. We indicated that the utility industry responded to our concern by implementing a voluntary education and technical guidance program for the proper management of these wastes. We expressed satisfaction with the industry program and tentatively concluded that additional regulation in this area was not necessary. We explained that we were committed to overseeing industry's progress on properly managing pyritic wastes, and would revisit our regulatory determination relative to co-management of pyrites with large volume coal combustion wastes at a later date, if industry progress was insufficient in this area.

Second, in the RTC we identified potential human health risks from arsenic when these wastes are used for agricultural purposes (*e.g.,* as a lime substitute). To address this risk, we indicated our preliminary view that Subtitle C regulations may be appropriate for this management practice. We explained that an example of such controls could include regulation of the content of these materials such that, when used for agricultural purposes, the arsenic level could be no higher than that found in agricultural lime. As an alternative to subtitle C regulation, we indicated that EPA could engage the industry to implement a voluntary program to address the risk, for example, by limiting the level of arsenic in coal combustion wastes when using them for agricultural purposes. Moreover, we indicated that a decision to establish hazardous waste regulations applicable to agricultural uses of co-managed coal combustion wastes would likely affect the regulatory status of the Part 1 wastes (i.e., electric utility high volume coal combustion wastes managed separately from other coal combustion wastes) when used for agricultural purposes. This is because the source of the identified risk was the arsenic content of the high volume coal combustion wastes and not other materials that may be co-managed with them.

Third, we expressed concern with potential impacts from the expanding practice of minefilling coal combustion wastes (i.e., backfilling the wastes into mined areas) and described the

difficulties we had with assessing the impacts and potential risks of this practice. We explained that these difficulties include:

- Determining if elevated contaminants in ground water are due to minefill practices or pre-existing conditions resulting from mining operations,
- Trying to model situations that may be more complex than our groundwater models can accommodate,
- The lack of long-term experience with the recent practice of minefilling, which limits the amount of environmental data for analysis, and
- The site-specific nature of these operations.

Accordingly, we did not present a tentative decision in the RTC for this practice. We indicated that subtitle C regulation would remain an option for minefilling, but that we needed additional information prior to making a final decision. Rather, we solicited additional information from commenters on these and other aspects of minefilling practices and indicated we would carefully consider that information in the formulation of today's decision.

C. How Did Commenters' React to EPA's Tentative Decisions and What Was EPA's Analysis of Their Comments?

Commenter's provided substantial input and information on several aspects of our overall tentative decision to retain the exemption for these wastes from RCRA subtitle C regulation. These aspects are: modeling and risk assessment for the groundwater pathway, documented damage cases, the potential for coal combustion waste characteristics to change as a result of possible future Clean Air Act regulations, proper management of mill rejects (pyrites), agricultural use of coal combustion wastes, the practice of minefilling coal combustion wastes, and our assessment of existing State programs and industry waste management practices.

1. How Did Commenters React to the Groundwater Modeling and Risk Assessment Analyses Conducted by EPA To Support its Findings in the Report to Congress?

Comments. Industry and public interest group commenters submitted detailed critiques of the groundwater model, EPACMTP, that we used for our risk analysis. Industry commenters believe that the model will overestimate the levels of contaminants that may migrate down-gradient from disposed wastes. Environmental groups expressed the opposite belief; that is, that the model underestimates down-gradient chemical concentrations and, therefore, underestimates the potential risk posed by coal combustion wastes.

The breadth and potential implications of the numerous technical comments on the EPACMTP model are significant. Examples of the comments include issues relating to:

- The thermodynamic data that are the basis for certain model calculations,
- The model's ability to account for the effects of oxidation-reduction potential,
- The model's ability to account for competition between multiple contaminants for adsorption sites,
- The model's algorithm for selecting adsorption isotherms,
- The impact of leachate chemistry on adsorption and aquifer chemistry, and
- The model's inherent assumptions about the chemistry of the underlying aquifer.

EPA's Analysis of the Comments. We have been carefully reviewing all of the comments on the model. We determined that the process of thoroughly investigating all of the comments will take substantially more time to complete than is available within the court deadline for issuing this regulatory determination. At this time, we are uncertain of the overall outcome of our analysis of the issues raised in the comments. Accordingly, we have decided not to use the results of our groundwater pathway risk analysis in support of today's regulatory determination on fossil fuel combustion wastes. As explained below, in making today's regulatory determination, we have relied in part on other information related to the potential danger that may result from the management of fossil fuel combustion wastes.

Meanwhile, we will continue with our analysis of comments on the groundwater model and risk analysis. This may involve changing or re-structuring various aspects of the model, if appropriate. It may also include additional analyses to determine whether any changes to the model or modeling methodology would materially affect the groundwater risk analysis results that were reported in the RTC. If our investigations reveal that a re-analysis of groundwater risks is appropriate, we will conduct the analysis and re-evaluate today's decisions as warranted by the re-analysis.

In addition to our ongoing review of comments on the groundwater model, one element of the model—the metals partitioning component called ''MINTEQ''—has been proposed for additional peer review. When additional peer review is completed, we will take the findings and recommendations into account in any overall decision to re-evaluate today's regulatory determination.

While not relying on the EPACMTP groundwater modeling as presented in the RTC, we have since conducted a general comparison of the metals levels in leachate from coal combustion wastes to their corresponding hazardous waste toxicity characteristic levels. Fossil fuel wastes infrequently exceed the hazardous waste characteristic. For co-managed wastes, 2% (1 of 51 samples) exceeded the characteristic level. For individual wastes streams, 0% of the coal bottom ash, 2% of the coal fly ash, 3% of the coal flue gas desulfurization, and 7% of the coal boiler slag samples that were tested exceeded the characteristic level. Nevertheless, once we have completed a review of our groundwater model and made any necessary changes, we will reevaluate groundwater risks and take appropriate regulatory actions. We will specifically assess new modeling results as they relate to any promulgated changes in the arsenic MCL.

We also compared leach concentrations from fossil fuel wastes to the drinking water MCLs. In the case of arsenic, we examined a range of values because EPA expects to promulgate a new arsenic drinking water regulation by January 1, 2001. This range includes the existing arsenic MCL (50 ug/l), a lower health based number presented in the FFC Report to Congress (RTC) (0.29 ug/l), and two assumed values in between (10 and 5 ug/l). We examined this range of values because of our desire to bracket the likely range of values that EPA will be considering in its effort to revise the current MCL for arsenic. The National Research Council's 1999 report on Arsenic in Drinking Water indicated that the current MCL is not sufficiently protective and should be revised downward as soon as possible. For this reason, we selected the current MCL of 50 ug/L for the high end of the range because EPA is now considering lowering the current MCL and does not anticipate that the current MCL would be revised to any higher value. We selected the health-based number presented in the Report to Congress for the low end of the range because we believe this represents the lowest concentration that would be considered in revising the current MCL. Because at this time we cannot project a particular value as the eventual MCL, we also examined values in between these low-end and high-end values, a value of 5

ug/L and a value of 10 ug/L, for our analyses supporting today's regulatory determination. The choice of these mid-range values for analyses does not predetermine the final MCL for arsenic.

Those circumstances where the leach concentrations from the wastes exceed the drinking water criteria have the greatest potential to cause significant risks. This ''potential'' risk, however, may not occur at actual facilities. Pollutants in the leachate of the wastes undergo dilution and attenuation as they migrate through the ground. The primary purpose of models such as EPACMTP is to account for the degree of dilution and attenuation that is likely to occur, and to obtain a realistic estimate of the concentration of contaminants at a groundwater receptor. To provide a view of potential groundwater risk, we tabulated the number of occurrences where the waste leachate hazardous metals concentrations were: (a) Less than the criteria, (b) between 1 and 10 times the criteria, (c) between 10 and 100 times the criteria, and (d) greater than 100 times the criteria. Groundwater models that we currently use, when applied to large volume monofill sources of metals, frequently predict that dilution and attenuation will reduce leachate levels on the order of a factor of 10 under reasonable high end conditions. This multiple is commonly called a dilution and attenuation factor (DAF). For this reason and because lower dilution and attenuation factors (*e.g.,* 10) are often associated with larger disposal units such as those typical at facilities where coal is burned, we assessed the frequency of occurrence of leach concentrations for various hazardous metals which were greater than 10 times the drinking water criteria. Based on current MCLs, there was only one exceedence (for cadmium). However, when we considered the arsenic health based criterion from the RTC, we found that a significant percentage (86%) of available waste samples had leach concentrations for arsenic that were greater than ten times the health-based criterion. Even considering intermediate values closer to the current MCL, a significant percentage of available waste samples had leach concentrations for arsenic that were greater than ten times the criteria (30% when the criterion was assumed to be 5 ug/l, and 14% when the criterion was assumed to be 10 ug/l). Similar concerns also occurred when comparing actual groundwater samples associated with FFC waste units and this range of criteria for arsenic. We believe this is an indication of potential risks from arsenic.

For the above analysis, we used a value equal to half the detection level to deal with those situations where analyses resulted in ''less than detection'' values that exceeded the MCL criteria. The actual concentration may be as low as zero or up to the detection level. To illustrate the impact of this assumption, an analysis was performed setting the ''less than detection'' values to zero, and an arsenic criteria at 50 ug/l. While 30% of the values exceeded 10 times the criteria when using half the detection level, exceedences dropped to 13% when ''less than detection'' values were set to zero.

The comparison of the leachate levels to 10 times MCL criteria is a screening level analysis that supports our concerns, which are primarily based on damage cases and the lack of installed controls (liners and groundwater monitoring). We recognize, however, that prior to issuing a regulation the Agency expects to address the issues raised on the groundwater model and complete a comprehensive groundwater modeling effort. Furthermore, we anticipate that uncertainty regarding whether the arsenic MCL will be amended and to what level, will be more settled prior to regulation of these wastes. These factors could heighten or reduce concerns with regard to the need for Federal regulation of fossil fuel combustion wastes.

2. How Did Commenters React to EPA's Assessment of Documented Damage Cases Presented in the Report to Congress?

Prior to issuing the RTC, we sought and reviewed potential damage cases related to these particular wastes. The activities included:

- A re-analysis of the potential damage cases identified during the Part 1 determination,
- A search of the CERCLA Information System for instances of these wastes being cited as causes or contributors to damages,
- Contacts and visits to regulatory agencies in five states with high rates of coal consumption to review file materials and discuss with state officials the existence of damage cases,
- A review of information provided by the Utility Solid Waste Act Group and the Electric Power Research Institute on 14 co-management sites, and
- A review of information provided by the Council of Industrial Boiler Owners on eight fluidized bed combustion (FBC) facilities.

These activities yielded three damage case sites in addition to the four cases initially identified in the Part 1 determination.[2] Five of the damage cases involved surface impoundments and the two other cases involved landfills. The waste management units in these cases were all older, unlined units. The releases in these cases were confined to the vicinity of the facilities and did not affect human receptors. None of the damages impacted human health. We did not identify any damage cases that were associated with beneficial use practices.

Comments. Public interest group commenters criticized our approach to identifying damage cases associated with the management of fossil fuel combustion (FFC) wastes, stating that EPA did not use the same procedure used to identify damage cases for the cement kiln dust (CKD) Report to Congress. These commenters believed that we were too conservative in our interpretation and determination of FFC damage cases and dismissed cases that commenters believe are relevant instances of damage. For example, these commenters indicated that EPA, in the RTC, did not consider cases where the only exceedences of ground water standards were for secondary MCLs (Maximum Contaminant Levels as established by EPA for drinking water standards). They further indicated that the states often require ground water monitoring only for secondary MCL constituents and that elevated levels of the secondary MCL constituents are an indication of future potential for more serious, health-based standards to be exceeded for other constituents in the wastes, such as toxic metals. Additionally, these commenters stated that the Agency's analysis for damage cases was incomplete and they provided information on 59 possible damage cases involving these wastes, mostly at utilities. Additionally, commenters submitted seven cases of ecological damage that allege damage to mammals, amphibians, fish, benthic layer organisms and plants from co-management of coal combustion wastes in surface impoundments.

Industry commenters cited EPA's finding of so few damage cases as important support for our tentative conclusion to exempt these wastes from hazardous waste regulation. Further, some of the industry commenters indicated that the few damage cases that EPA identified do not represent current

[2] The Part 1 determination identified six cases of documented damages. Upon further reveiw, we determined that two of these cases involve utility coal ash monofills which are covered by the Part 1 determination. However, the other four cases involved remaining wastes that are covered by today's determination.

utility industry management practices, but rather reflect less environmentally protective management practices at older facilities that pre-date the numerous state and federal requirements that are now in effect for managing these wastes.

EPA's Analysis of the Comments. Regarding ecological damage, while we did not identify any ecological damage cases in the RTC associated with management of coal combustion wastes, we reviewed the information on ecological damage submitted by commenters and agree that four of the seven submitted are documented damage cases that involve FFC wastes. All of these involve some form of discharge from waste management units to nearby lakes or creeks. These confirm our risk modeling conclusions as presented in the RTC that there could be adverse impacts on amphibians, birds, or mammals if they were subject to the elevated concentrations of selected chemicals that had been measured in some impoundments. However, no information was submitted in comments that would lead us to alter our conclusion that these threats are not substantial enough to cause large scale, system level ecological disruptions. These damage cases, attributable to runoff or overflow that is already subject to Clean Water Act discharge or stormwater regulations, are more appropriately addressed under the existing Clean Water Act requirements.

Regarding our assessment of damage to ground water, we believe our approach to FFC damage cases in the RTC was consistent with the approach we used for identifying CKD damage cases. For CKD, we established two categories of damage cases—''proven'' damage cases and ''potential'' damage cases. Proven damage cases were those with documented MCL exceedences that were measured in ground water at a sufficient distance from the waste management unit to indicate that hazardous constituents had migrated to the extent that they could cause human health concerns. Potential damage cases were those with documented MCL exceedences that were measured in ground water beneath or close to the waste source. In these cases, the documented exceedences had not been demonstrated at a sufficient distance from the waste management unit to indicate that waste constituents had migrated to the extent that they could cause human health concerns. We do not believe that it would be appropriate to consider an exceedence directly beneath a waste management unit or very close to the waste boundary to be a documented, proven damage case. State regulations typically use a compliance procedure that relies on measurement at a receptor site or in ground water at a point beyond the waste boundary (*e.g.,* 150 meters). While our CKD analysis did not distinguish between primary and secondary MCL exceedences, most CKD damage cases involved a primary MCL constituent. Our principal basis for determining that CKD when managed in land-based units would no longer remain exempt from being regulated as a hazardous waste was our concern about generally poor management practices characteristic of that industry. Our conclusion was further supported by the extremely high percentage of proven damage cases occurring at active CKD sites for which groundwater monitoring data were available.

For FFC, we used the same test of proof to identify possible damage cases. Our FFC analysis drew a distinction between primary and secondary MCL exceedences because we believe this factor is appropriate in weighing the seriousness of FFC damage in terms of indicating risk to human health and the environment. For FFC, in the RTC, we reported only the ''proven'' damage (*i.e.,* exceedence of a health-based standard such as a primary MCL and measurement in ground water or surface water). As was done in the CKD analysis, we also identified a number of potential FFC damage cases (eleven) which were included in the background documents that support the RTC.

Unlike the primary MCLs, secondary MCLs are not based on human health considerations. (Examples are dissolved solids, sulfate, iron, and chloride for which groundwater standards have been established because of their effect on taste, odor, and color.) While some commenters believe that elevated levels of some secondary MCL parameters such as soluble salts are likely precursors or indicators of future hazardous constituent exceedences that could occur at coal combustion facilities, we are not yet able and will not be able to test their hypothesis until we complete our analysis of all comments received on our groundwater model and risk analysis, which will not be concluded until next year.

Of the 59 damage cases reported by commenters, 11 cases appear to involve exceedences of primary MCLs or other health-based standards as measured either in off-site ground water or in nearby surface waters, the criteria we used in the RTC to identify proven damage cases. Of these eleven cases, two are coal ash monofills which were included in the set of damage cases described by EPA in its record supporting the Part 1 regulatory determination. The remaining nine cases involve the co-management of large volume coal combustion wastes with other low volume and uniquely associated coal combustion wastes. We had already identified five of these nine cases in the RTC. Thus, only four of these eleven damage cases are newly identified to us. Briefly, the four new cases involve:

- Exceedence of a state standard for lead in downgradient ground water at a coal fly ash landfill in New York. There were also secondary MCL exceedences for sulfate, dissolved solids, and iron.
- Primary MCL exceedences for arsenic and selenium in downgradient monitoring wells for a coal ash impoundment at a power plant in North Dakota. There were also secondary MCL exceedences for sulfate and chloride.
- Primary MCL exceedences for fluoride and exceedence of a state standard for boron in downgradient monitoring wells at a utility coal combustion waste impoundment in Wisconsin. There was also a secondary MCL exceedence for sulfate.
- Exceedence of a state standard for boron and the secondary MCL for sulfate and manganese in downgradient monitoring wells at a utility coal combustion landfill in Wisconsin.

We found that in nine of the 11 proven damage cases (including one Superfund site), states took appropriate action to require or conduct remedial activities to reduce or eliminate the cause of contamination. EPA took action in the remaining two cases under the Superfund program

Nineteen of the candidate damage cases submitted by commenters involve either on-site or off-site exceedences of secondary MCLs, but not primary MCLs or other health-based standards. Consistent with our CKD analysis, we consider these cases to be indicative of a potential for damage to occur at these sites because they demonstrate that there has been a release to ground water from the waste management unit.

Regarding the remaining 29 cases submitted by commenters:

- Six involve primary MCL exceedences, but measurements were in ground water either directly beneath the waste or very close to the waste boundary, *i.e.*, no off-site ground water or receptor measurements indicated that ground water standards had been exceeded. Consistent with our analysis of damage cases for cement kiln dust, we consider these six cases to be indicative of a potential for damage to occur at these sites because they demonstrate that there has been a

release to ground water from the waste management unit..

• Eighteen case summary submissions contained insufficient documentation and data for us to verify and draw a conclusion about whether we should consider these to be potential or proven damage cases. Of these 18 cases, commenters claimed that 11 cases involve primary MCL exceedences, and another two involve secondary MCLs, but not primary MCLs. The other five cases lacked sufficient information and documentation to determine whether primary or secondary MCLs are involved. Examples of information critical to assessing and verifying candidate damage cases that was not available for these particular cases include: Identification of the pollutants causing the contamination; identification of where or how the damage case information was obtained (*e.g.*, facility monitoring data, state monitoring or investigation, third party study or analysis); monitoring data used to identify levels of contaminants; and/or sufficient information to determine whether the damages were actually attributable to fossil fuel combustion wastes; and/or location of the identified contamination (*i.e.*, directly beneath the unit or very close to the waste boundary or at a point some distant (*e.g.*, 150 meters) from the unit boundary).

• Three case submissions are cases we identified in the Part 1 determination and involve monofilled utility coal ash wastes. However, as explained in the Report to Congress for the Part 1 determination, EPA determined that there was insufficient evidence to consider them to be documented damage cases.

• One case did not involve fossil fuel combustion wastes.

• One case involved coal combustion wastes and other unrelated wastes in an illegal, unpermitted dump site. This site was handled by the state as a hazardous waste cleanup site.

Our detailed analysis of the damage cases submitted by commenters is available in the public docket for this regulatory determination.

In summary, based on damage case information presented in the RTC and our review of comments, we conclude that there are 11 proven damage cases associated with wastes covered by today's regulatory determination. We identified seven of these damage cases in the RTC, so there are four new proven damage cases that were identified by commenters. All of the sites were at older, unlined units, with disposal occurring prior to 1993. For all 11 of the proven damage cases, either the state or EPA provided adequate follow-up to require or else undertake corrective action. Although these damage cases indicate that coal combustion wastes can present risks to human health and the environment, they also show the effectiveness of states' responses when damages were identified. None of these cases involved actual human exposure.

Additionally, we determined that another 25 of the commenter submitted cases are potential damage cases for the reasons described above. Thus, including the 11 potential damage cases that we identified in the background documents that support the RTC, we are aware of 36 potential damage cases. While we do not believe the latter 36 cases satisfy the statutory criteria of documented, proven damage cases because damage to human health or the environment has not been proven, we believe that these cases may indicate that these wastes pose a ''potential'' danger to human health and the environment in some circumstances.

In conclusion, while the absolute number of documented, proven damage cases is not large, we believe that the evidence of proven and potential damage should be considered in light of the proportion of new and existing facilities, particularly surface impoundments, that today lack basic environmental controls such as liners and groundwater monitoring. Approximately one-third of coal combustion wastes are managed in surface impoundments. We note that controls such as liners may not be warranted at some facilities, due to site-specific conditions. We acknowledge, however, that our inquiry into the existence of damage cases was focused primarily on a subset of states. Given the volume of coal combustion wastes generated nationwide and the number of facilities that lacked groundwater monitoring as of 1995, there is at least a substantial likelihood other cases of actual and potential damage likely exist. Because we did not use a statistical sampling methodology to evaluate the potential for damage, we are unable to determine whether the identified cases are representative of the conditions at all facilities and, therefore, cannot quantify the extent and magnitude of damages at the national level.

3. What Concerns Did Commenters Express About the Impact of Potential Future Regulation of Hazardous Air Pollutants Under the Clean Air Act on Today's Regulatory Determination?

Comments. In both public hearing testimony and written comments, public interest groups expressed concern about potential changes in the characteristics of these wastes when new air pollution controls are established under the Clean Air Act. The commenters referred to the possible future requirement for hazardous air pollutant controls at coal burning electric utility power plants, which could result in an increased level of metals and possibly other hazardous constituents in coal combustion wastes. The commenters indicated that these increased levels, in turn, could have serious implications for cross-media environmental impacts such as leaching to groundwater and volatilization to the air. The commenters argued that the Agency should include these factors in its current decision making on the regulatory status of coal combustion under the Resource Conservation and Recovery Act.

EPA's Analysis of the Comments. We have carefully considered the issue of cross-media impacts and the commenters' specific concerns that future air regulations could have an adverse impact on the characteristics of coal combustion wastes. We have concluded that it is premature to consider the possible future impact of such new air pollution controls on the wastes that are subject to today's regulatory determination. The Agency plans to issue a regulatory determination in the latter part of 2000 regarding hazardous air pollutant (HAP) controls at coal-burning, power generating facilities. If EPA decides to initiate a rulemaking process, final rulemaking under the Clean Air Act is projected to occur in 2004. Thus, no final decision has been made on what, if any, constituents will be regulated by future air pollution control requirements. Additionally, the regulatory levels of the those specific pollutants that might be controlled and the control technologies needed to attain any regulatory requirements have not yet been identified. Therefore, we believe there is insufficient information at this time for evaluating the characteristics and potential environmental impacts of solid wastes that would be generated as a result of new Clean Air Act requirements.

When any rulemaking under the Clean Air Act proceeds to a point where we can complete an assessment of the likely changes to the character of coal combustion wastes, we will evaluate the implications of these changes relative to today's regulatory determination and take appropriate action.

4. How Did Commenters React to the Findings Presented in the Report to Congress Related to Proper Management of Mill Rejects (Pyrites)?

The RTC explained that we identified situations where pyrite-bearing

materials such as mill rejects (a low volume and uniquely associated waste) that are co-managed with coal combustion wastes may cause or contribute to risks or environmental damage if not managed properly. These materials when managed improperly with exposure to air and water can generate acid. The acid, in turn, can mobilize metals contained in the co-managed combustion wastes. The RTC also explained that the Agency engaged the utility industry in a voluntary program to ensure appropriate management of these wastes. The industry responded by developing technical guidance and a voluntary industry education program on proper management of these wastes.

Comments. Utility industry commenters supported our tentative decision to continue the exemption for coal combustion wastes co-managed with mill rejects from regulation as a hazardous waste. Their position is based primarily on the industry's voluntary implementation of an education program and technical guidance on the proper management of these wastes, as described in the RTC.

Public interest groups and other commenters disagreed with our tentative decision, explaining their belief that such voluntary controls or programs are inadequate. They indicated that coal combustion wastes should be subject to hazardous waste regulations.

EPA's Analysis of the Comments. We remain encouraged by the utility industry program to educate and inform its members by implementing guidance on the proper management of coal mill rejects. However, as pointed out by commenters, there is no assurance that facilities where coal combustion wastes co-managed with pyritic wastes will follow the guidance developed by industry. In light of the number of demonstrated and potential damage cases identified to date, we are concerned that simply relying on voluntary institution of necessary controls would not adequately ensure the protection of human health and the environment. At this time, to ensure that we are aware of all stakeholders views on the adequacy of the control approaches described in the guidance to protect human health and the environment, we are soliciting public comment on the final version of the industry coal mill rejects guidance. This guidance is available in the docket supporting today's decisions.

5. How Did Commenters React to the Findings Presented in the Report to Congress Related to Agricultural Use of Coal Combustion Wastes?

In the RTC, we presented findings on the human health risks associated with agricultural use of coal wastes as an agricultural lime substitute. The pathway examined embodies risks from ingestion of soil and inhalation, and from ingestion of contaminated dairy, beef, fruit and vegetable products. The resultant ''high end'' cancer risk reported in the RTC was 1×10^{-5} (one in one hundred thousand exposed population), for the child of a farmer. The variables held at high end for this calculation were contaminant concentration and children's soil ingestion. With all variables set to central tendency values, the risk was calculated to be 1×10^{-7} (one in ten million exposed population). We did not identify the presence of any non-cancer hazard of concern. Based on the high end risk, the Agency raised the possibility in the RTC of developing Subtitle C controls or seeking commitments from industry to a voluntary program.

Comments. A number of industry, academic, and federal agency commenters disagreed with our tentative conclusion that some level of regulation may be appropriate for coal combustion wastes when used as an agricultural soil supplement. They indicated that EPA used unrealistically conservative levels for four key inputs used in our risk analysis and that use of a realistic level for any one of these inputs would result in a risk level less than 1×10^{-6}. The four inputs identified by the commenters are: application rate of the wastes to the land, the rate of soil ingestion by children, the bioavailability of arsenic and the phytoavailability of arsenic.

These commenters further recommended that EPA not regulate, but rather encourage voluntary restrictions because:

- Agricultural use of coal combustion wastes creates no adverse environmental impacts and EPA identified no damage cases associated with this practice;
- Agricultural use of these wastes has significant technical and economic benefits;
- Federal controls would be unnecessarily costly and would create a barrier for research and development on the practice;
- Existing regulatory programs are sufficient to control any risks from this practice; and
- The limits suggested in the RTC for arsenic levels in coal combustion wastes are inconsistent with limits applied to other materials used in agriculture.

Public interest groups stated their belief that a voluntary approach would not be sufficiently protective of human health and the environment. They believe the Agency should apply restrictions on the use of these wastes in agriculture because the Agency's analyses of the risks and benefits of this practice were inadequate. They further recommended that EPA should prohibit the land application of coal combustion wastes generated by conventional boilers, and make the arsenic limitation of EPA's sewage sludge land application regulations applicable to the land application of coal combustion wastes generated by fluidized bed combustors, which add lime as part of the combustion process.

EPA's Analysis of Comments. After reviewing these comments and supporting information provided by the commenters, we concluded that a revised input into the model for children's soil ingestion rate is appropriate. Based on further review of the Agency's Exposure Factors Handbook (EFH), we decided to model a children's soil ingestion rate of 0.4 grams per day instead of the 1.4 grams per day that underlay the results given in the RTC.

Many studies have been conducted to estimate soil ingestion by children. Early studies focused on dirt present on children's hands. More recently, studies have focused on measuring trace elements in soil and then in feces as a function of internal absorption. These measurements are used to estimate amounts of soil ingested over a specified time period. The EFH findings for children's soil ingestion are based on seven key studies and nine other relevant studies that the Agency reviewed on this subject. These studies showed that mean values for soil ingestion ranged from 39 mg/day to 271 mg/day with an average of 146 mg/day. These results are characterized for studies that were for short periods with little information reported for pica behavior. To account for longer periods of time, the EFH reviewed the upper percentile ranges of the data studied and found ingestion rates that ranged from 106 mg/day to 1,432 mg/day with an average of 383 mg/day for soil ingestion. Rounding to one significant figure, the EFH recommended an upper percentile children's soil ingestion rate of 400 mg/day. The Agency believes that this recommendation is the best available information to address children's exposure through the soil ingestion route. Reducing the ingestion rate to the EFH handbook recommended level of

400 mg/day reduced the calculated risk to $3.4 \times 10{-}6$ for this one child risk situation and suggests that agricultural use of FFC wastes does not cause a risk of concern.

EPA believes its inputs for phytoavailability are accurate, although there are studies that suggest phytoavailability will decrease over time. Arsenic bioavailability is a function of all sources of arsenic and EPA believes it has characterized this accurately. However, as noted elsewhere, arsenic toxicity is now being studied by the Agency in conjunction with a proposed new arsenic MCL and may necessitate re-visiting today's judgement on agricultural use.

Our technical analysis that resulted in revised risk is explained in a document titled Reevaluation of Non-groundwater Pathway Risks from Agricultural Use of Coal Combustion Wastes, which is available in the docket for this action.

The comment on inappropriateness of application frequency was caused by a misunderstanding of the language in the RTC. The rate used was actually every two or three years, not two or three times per year.

Two ongoing studies of wastes of potential use as agricultural soil supplements relate to the use of FFC wastes for this purpose. Although these did not play a direct role in EPA's decision regarding FFC wastes, they are summarized below and may play a role in any future review of today's decision.

(1) On August 20, 1999, the agency proposed risk-based standards for cement kiln dust when used as a liming agent (see 64 FR 45632; August 20, 1999). This analysis was completed in 1998 just prior to our completion of the analysis of FFC wastes when used as agricultural supplements. The CKD analysis underwent a special peer review by a standing committee that is used by the Department of Agriculture. We were not able to respond to the peer review comments in either the CKD proposal or in our assessment for fossil fuel combustion wastes prior to publication of today's regulatory determination. The comment period for the CKD proposal closed on February 17, 2000, and we will soon begin our review and analyses of the public and peer review comments.

(2) In December 1999, EPA proposed new risk based standards for the use of municipal sewage sludge under section 503 of the Clean Water Act (the ''503 standards''). It is important to note that municipal sludge has unique properties, application rates, and uses. This makes it inappropriate to transfer the 503 standards directly. Even though the standards cannot be used directly, there may be interest in the risk assessment methodologies used to support the development of these standards. We disagree that it is appropriate to establish an arsenic limitation for coal combustion ash when used for agricultural purposes equivalent to that contained in the EPA sewage sludge land application regulations. The organic nature of sewage sludge makes it behave very differently from inorganic wastes such as coal combustion wastes.

We conclude at this time that arsenic levels in coal combustion wastes do not pose a significant risk to human health when used for agricultural purposes. We expect to continue to review and refine the related risk assessments noted above, and will consider comments on the Agency's CKD and municipal sludge proposals, as well as new scientific developments related to this issue such as additional peer review of the EPA MINTEQ model that was used as a component of our risk analysis. If these efforts lead us to a different understanding of the risks posed by coal combustion wastes when used as a substitute for agricultural lime, we will take appropriate action to reevaluate today's regulatory determination.

6. How Did Commenters React to the Findings Presented in the Report to Congress Related to Minefilling of Coal Combustion Wastes?

In the RTC, we explained that we had insufficient information to adequately assess the risks associated with the use of coal combustion wastes to fill surface and underground mines, whether the mines are active or abandoned. Accordingly, we did not present a tentative conclusion in the RTC with respect to the use of coal combustion wastes for disposal in active mines or for reclamation of mines. However, we did indicate that regulation of minefilling under hazardous waste rulemaking authority would remain an option for minefilling, but that we needed additional information prior to making a final decision. Thus, we solicited additional information on specific minefilling techniques, problems that may be inherent in this management practice, risks posed by this practice, existing state regulatory requirements, and environmental monitoring data. We indicated that we would consider any comments and new information on minefilling received in comments and would address this management practice in today's regulatory determination.

Comments. A number of commenters responded to our request by providing reports on individual case studies, including minefilling in underground as well as in surface mines, descriptions of current state regulatory requirements that address this practice, monitoring data, and information about risk analysis techniques.

Industry commenters and one federal agency supported our decision to study the issue further and not attempt to estimate the risks posed by this practice using existing methods. Further, numerous industry, academic, state agency, and federal agency commenters encouraged EPA not to adopt national regulations or voluntary restrictions on minefilling because: (a) Nationwide standards would not be conducive to the site-specific evaluations needed to appropriately control these operations; (b) minefilling creates no adverse environmental impacts and EPA identified no damage cases associated with this practice; (c) existing state and federal regulatory programs and industry practices are sufficient to control any risks from this practice, and (d) federal standards would be an unreasonable interference with states' authorities.

Additionally, several industry representatives, legislators, and state mining and environmental agencies mentioned that this practice, when used to remediate abandoned mine lands, will produce considerably greater environmental benefits than risks. Further, they maintained that minefilling is a relatively inexpensive means to stop or even reverse the environmental damage caused by old mining practices. They indicated that through remediation by minefilling, these lands frequently can be returned to productive use. These commenters recommended no additional regulation of this practice.

Public interest groups and others believe we should regulate minefilling under RCRA subtitle C or prohibit it for several reasons including weaknesses in existing state and federal regulatory programs, the poor practices and performance at existing minefilling operations, and potential impacts on potable water sources. Commenters stated that state programs effectively allow open dumps without any design or construction standards. For minefilling, one commenter urged EPA to defer to state regulations only if the Agency specifically found existing state regulations to be adequate.

EPA's Analysis of Comments. We agree with commenters that it is inappropriate to estimate the risks posed by minefilling using the existing methods that we employed to conduct risk analyses for disposal of coal combustion wastes in landfills and impoundments. We found that the

groundwater models available to us are unsuitable for estimating risks from minefills because, for example, they are not able to account for conditions such as fractured flow that are typical of the hydrogeology associated with mining operations. In addition, as explained above, EPA's primary groundwater model, EPACMTP, is now undergoing careful review on the basis of comments received on the Report to Congress.

We are aware that the use of coal combustion wastes to conduct remediation of mine lands can improve conditions caused by mining activities. We also recognize that this often is the lowest cost option for conducting these remediation activities. We generally encourage the practice of remediating mine lands with coal combustion wastes when minefilling is conducted properly and when there is adequate oversight of the remediation activities. We are also aware that relatively few states currently operate regulatory or other programs that specifically address minefilling, and that many states where this practice is occurring do not have programs in place. Based on our review of information on existing state minefill programs, we find serious gaps such as a lack of adequate controls and restrictions on unsound practices, *e.g.*, no requirement for groundwater monitoring and no control or prohibitions on waste placement in the aquifer.

At this time, we cannot reach definitive conclusions about the adequacy of minefilling practices employed currently in the United States and the ability of government oversight agencies to ensure that human health and the environment are being adequately protected. For example, it is often impossible to determine if existing groundwater quality has been impacted by previous mining operations or as a result of releases of hazardous constituents from the coal combustion wastes used in the minefilling applications. Additionally, data and information submitted during the public comment period indicate that if the chemistry of the mine relative to the chemistry of the coal combustion wastes is not properly taken into account, the addition of coal combustion wastes to certain environmental settings can lead to an increase in hazardous metals released into the environment. This phenomena has been substantiated by data available to the Agency that show when pyrites, which can cause acid generation, have been improperly co-managed with coal combustion wastes, high levels of metals, especially arsenic, have leached from the wastes.

Finally, we concluded in our recent study of disposal of cement kiln dust that placement of cement kiln dust directly in contact with ground water led to a substantially greater release of hazardous metal constituents than we predicted would occur when such placement in ground water did not occur. We are aware of situations where coal combustion wastes are being placed in direct contact with ground water in both underground and surface mines. This could lead to increased releases of hazardous metal constituents as a result of minefilling. Thus, if the complexities related to site-specific geology, hydrology, and waste chemistry are not properly taken into account when minefilling coal combustion wastes, we believe that certain minefilling practices have the potential to degrade, rather than improve, existing groundwater quality and can pose a potential danger to human health and the environment. Subsequent impacts on human health would depend in part on the proximity of drinking water wells, if any, to elevated levels of metals in the water. To date we are unaware of any proven damage cases resulting from minefilling operations.

7. How Did Commenters React to EPA's Tentative Reliance on State Programs and Voluntary Industry Implementation of Improved Management Practices To Mitigate Potential Risks From Coal Combustion Waste Management?

In the RTC, EPA considered retaining the exemption for coal combustion wastes disposed in surface impoundments and landfills and for mill rejects (pyrites) that are managed with those wastes. The Agency cited a reliance on state programs that have improved substantially over the past 10 to 15 years and continue to improve, combined with voluntary industry implementation of guidance for improved management practices to mitigate risk. In addition, we stated that we would continue to work with industries and states to promote and monitor improvements.

To assess the adequacy of state programs and the potential for voluntary implementation of improved practices, we looked at the current number of facilities with liners and groundwater monitoring (which may reflect voluntary industry upgrading as well as state requirements), and the number of state programs that currently have authority to require a broad range of environmental controls. For units operating as of 1995, we found that among utilities, slightly more than half of the disposal units were surface impoundments. Of these impoundments, 38 percent had groundwater monitoring and 26 percent had liners. Eighty-five percent of the utility landfills had groundwater monitoring and 57 percent had liners. For non-utility landfills, 94 percent had groundwater monitoring, and between 16 percent and 52 percent had liners. Between 1985 and 1995, 75 percent of new landfills and 60 percent of new surface impoundments within the utility sector had been lined. We have no information regarding the percentage of units built since 1995 (the date when the study we have relied on ended) that have liners or groundwater monitoring programs.

In looking at state programs, we found that for landfills, more than 40 states have the authority to require permits, siting restrictions, liners, leachate collection, groundwater monitoring, closure controls, and cover/dust controls. Forty-three states can require liners and 46 can require groundwater monitoring compared to 11 and 28 states, respectively, in the 1980's. For surface impoundments, more than 40 states have authority to require permits, siting restrictions, liners, groundwater monitoring, and closure control; 33 can require leachate collection (there is no earlier comparison data for surface impoundments). Forty-five states can require liners and 44 can require groundwater monitoring for impoundments.

Comments. Industry and state agency commenters generally stated that the Agency presented an accurate and comprehensive analysis of state programs and that existing state regulations are adequate. Public interest commenters raised many concerns about the adequacy of state programs: Either they do not have provisions to cover all elements of a protective program; they do not consistently impose the requirements for which they have authority; and/or enforcement is lax. Evidence commenters cited for the inadequacy of state programs included grandfathering for older management units and an apparent lack of controls for surface impoundments. For these reasons, some found EPA's review of state programs inaccurate or incomplete.

Public interest commenters were also skeptical of programs or efforts that rely on voluntary industry implementation because adherence to guidance is not guaranteed. Several commenters, primarily from industry, urged the Agency not to regulate pyrite co-management because of the voluntary, industry-developed guidance.

EPA's Analysis of Comments. We believe that state programs have, in fact, substantially improved over the last 15

years or so. A high percentage of states have authority to impose protective management standards on surface impoundments and landfills, especially for groundwater monitoring, liners, and leachate collection, which mitigate potential risks posed by these units. Over 40 states today have these authorities (33 states have authority to require leachate collection in surface impoundments). When authority under state groundwater and drinking water regulations are considered, some commenters have suggested that nearly all states can address the management of these wastes. In addition, we believe that the trend to line and install groundwater monitoring for new surface impoundments and landfills is positive. However, as some commenters noted, we acknowledge that our state program review looked at the authorities available to states and their overall regulatory requirements, not the specific requirements applied to given facilities, which could be more or less stringent. In addition, we recognize that individual state programs may have some gaps in coverage, as indicated below, so that some controls may not now be required at coal combustion waste impoundments and landfills. We would expect to see some differences in the application of requirements, depending on site-specific conditions.

One consistent trend that raises concern for the Agency is that controls are much less common at surface impoundment than at landfills. Even for newer units at utilities (constructed between 1985 and 1995), liners are used at 75 percent of landfills and only 60 percent of surface impoundments. Also at newer units, groundwater monitoring is implemented at 88 percent of landfills and at only 65 percent of surface impoundments. Approximately one-third of coal combustion wastes were managed in surface impoundments in 1995. Hydraulic pressure in a surface impoundment increases the likelihood of releases. We believe that groundwater monitoring, at a minimum, in existing as well as new impoundments, is a reasonable approach to monitor performance of the unit and a critical first step to addressing groundwater damage that may be caused by the unit. As of 1995, 38 percent of currently operating utility surface impoundments had groundwater monitoring and only 26 percent had liners.

While liners and groundwater monitoring are applied more frequently at landfills, there are still many utility and non-utility landfills that do not have liners. In addition, 15 percent of utility landfills do not have groundwater monitoring, and some six percent of non-utility landfills do not have groundwater monitoring, based on a limited survey.

The utility industry through its trade associations has demonstrated a willingness to work with EPA to develop protective management practices, and individual companies have committed to upgrading their own practices. However, the Agency recognizes that participation in voluntary programs is not assured. Also, individual facilities and companies may not implement protective management practices and controls, for a variety of reasons, in spite of their endorsement by industry-wide groups.

We see a trend toward significantly improving state programs and voluntary industry investment in liners and groundwater monitoring that we believe can mitigate potential risks over time. However, we identified significant gaps in controls already in place and, in particular, requirements that may be lacking in some states, either in authority to impose the requirements or potentially in exercising that authority. In response to comments, we further analyzed risks posed by coal combustion wastes taking into account waste characteristics and potential and actual damage cases. Based on these analyses, we concluded that coal combustion wastes, in certain circumstances, could unnecessarily increase risks to human health and the environment, and that a number of proven damages have been documented, and that more are likely if we had been able to conduct a more thorough search of available state records and if groundwater monitoring data were available for all units. We recognize there will probably continue to be some gaps in practices and controls and are concerned at the possibility that these will go unaddressed. We also believe the time frame for improvement of current practices is likely to be longer in the absence of federal regulations.

D. What Is the Basis for Today's Decisions?

Based on our collection and analysis of information reflecting the criteria in section 8002(n) of RCRA that EPA must consider in making today's regulatory determination, materials developed in preparing the RTC and supportive background materials, existing state and federal regulations and programs that affect the management of coal combustion wastes, and comments received from the public on the findings we presented in the RTC, we have concluded the following:

1. Beneficial Uses

To the extent coal combustion wastes are used for beneficial purposes, we believe they should continue to remain exempt from being regulated as hazardous wastes under RCRA. Beneficial purposes include waste stabilization, beneficial construction applications (*e.g.,* cement, concrete, brick and concrete products, road bed, structural fill, blasting grit, wall board, insulation, roofing materials), agricultural applications (*e.g.,* as a substitute for lime) and other applications (absorbents, filter media, paints, plastics and metals manufacture, snow and ice control, waste stabilization). For the reasons presented in section 3 below, we are separately addressing the use of coal combustion wastes to fill surface or underground mines.

For beneficial uses other than minefilling, we have reached this decision because: (a) We have not identified any beneficial uses that are likely to present significant risks to human health or the environment; and (b) no documented cases of damage to human health or the environment have been identified. Additionally, we do not want to place any unnecessary barriers on the beneficial use of coal combustion wastes so that they can be used in applications that conserve natural resources and reduce disposal costs.

Disposal can be burdensome and fails to take advantage of beneficial characteristics of fossil fuel combustion wastes. About one-quarter of the coal combustion wastes now generated are diverted to beneficial uses. Currently, the major beneficial uses of coal combustion wastes include: Construction (including building products, road base and sub-base, blasting grit and roofing materials) accounting for approximately 21%; sludge and waste stabilization and acid neutralization accounting for approximately 3%; and agricultural use accounting for 0.1%. Based on our conclusion that these beneficial uses of coal combustion wastes are not likely to pose significant risks to human health and the environment, we support increases in these beneficial uses of coal combustion wastes.

Off-site uses in construction, including wallboard, present low risk due to the coal combustion wastes being bound or encapsulated in the construction materials or because there is low potential for exposure. Use in waste and sludge stabilization and in acid neutralization are either regulated (under RCRA for hazardous waste stabilization or when placed in

municipal solid waste landfills, or under the Clean Water Act in the case of municipal sewage sludge or wastewater neutralization), or appear to present low risk due to low exposure potential. While in the RTC, we expressed concern over risks presented by agricultural use, we now believe our previous analysis assumed unrealistically high-end conditions, and that the risk, which we now believe to be on the order of 10^{-6}, does not warrant national regulation of coal combustion wastes that are used in agricultural applications.

In the RTC, we were not able to identify damage cases associated with these types of beneficial uses, nor do we now believe that these uses of coal combustion wastes present a significant risk to human health or the environment. While some commenters disagreed with our findings, no data or other support for the commenters' position was provided, nor was any information provided to show risk or damage associated with agricultural use. Therefore, we conclude that none of the beneficial uses of coal combustion wastes listed above pose risks of concern.

2. Disposal in Landfills and Surface Impoundments

In this section, we discuss available information regarding the potential risks to human health and the environment from the disposal of coal combustion wastes into landfills and impoundments. In sum, our conclusion is these wastes can pose significant risks when mismanaged and, while significant improvements are being made in waste management practices due to increasing state oversight, gaps in the current regulatory regime remain.

We have determined that the establishment of national regulations is warranted for coal combustion wastes when they are disposed in landfills and surface impoundments, because: (a) The composition of these wastes has the potential to present danger to human health and the environment under some circumstances and ''potential'' damage cases identified by EPA and commenters, while not definitively demonstrating damage from coal combustion wastes, lend support to our conclusion that these wastes have the potential to pose such danger; (b) we have identified eleven cases of proven damage to human health and the environment by improper management of these wastes when land disposed; (c) while industry management practices have improved measurably in recent years, there is sufficient evidence these wastes are currently being managed in a significant number of landfills and surface impoundments without proper controls in place, particularly in the area of groundwater monitoring; and (d) while there have been substantive improvements in state regulatory programs, we have also identified significant gaps either in states' regulatory authorities or in their exercise of existing authorities. Moreover, we believe that the costs of complying with regulations that specifically address these problems, while large in absolute terms, are only a small percentage of industry revenues.

When we considered a tailored subtitle C regulatory approach, we estimated the potential costs of regulation of coal combustion wastes (including the utility coal combustion wastes addressed in the 1993 Part 1 determination) to be $1 billion per year. While large in absolute terms, we estimate that these costs are less than 0.4 percent of industry sales. Our preliminary estimate of impact on profitability is a function of facility size, among other factors. For the larger facilities, we estimate that reported pre-tax profit margins of about 13 percent may be reduced to about 11 percent. For smaller facilities, margins may be reduced from about nine percent to about seven percent.

We identified that the constituents of concern in these wastes are metals, particularly hazardous metals. We further identified that leachate from various large volume wastes generated at coal combustion facilities infrequently exceed the hazardous waste toxicity characteristic, for one or more of the following metals: arsenic, cadmium, chromium, lead, and mercury. Additionally, when we compared waste leachate concentrations for hazardous metals to their corresponding MCLs (or potential MCLs in the case of arsenic), we found that there was a potential for risk as a result of arsenic leaching from these wastes. The criteria we examined included the existing arsenic MCL, a lower health based number presented in the RTC, and two assumed values in between. We examined this range of values because, as explained earlier in this notice, EPA is in the process of revising the current MCL for arsenic to a lower value as a result of a detailed study of arsenic in drinking water and we wanted to assess the likely range of values that would be under consideration by EPA. Once we have completed a review of our groundwater model and made necessary changes, we will reevaluate the potential risks from metals in coal combustion wastes and compare any projected groundwater contamination to the MCLs that exist at that time.

We also identified situations where the improper management of mill rejects, a low volume and uniquely associated waste, with high volume coal combustion wastes has the potential to cause releases of higher quantities of hazardous metals. When these wastes are improperly managed, the mill rejects can create an acidic environment which enhances leachability and can lead to the release of hazardous metals in high concentrations from the co-managed wastes to ground water or surface waters. Thus, our analysis of the characteristics of coal combustion wastes leads us to conclude that these wastes have the potential to pose risk to human health and the environment. We also plan to address such waste management practices in our subsequent rulemaking.

Additionally, we identified 11 proven damage cases that documented disposal of coal combustion wastes in unlined landfills or surface impoundments that involved exceedences of primary MCLs or other health-based standards in ground water or drinking water wells. Three of the proven damage cases were on the EPA Superfund National Priorities List. Although these damage cases indicate that coal combustion wastes can present risks to human health and the environment, they also show the effectiveness of states' responses when damages were identified. All of the sites were at older, unlined units, with disposal occurring prior to 1993. None of these cases involved actual human exposure. Given the large number of facilities that do not now conduct groundwater monitoring, we have a concern that additional cases of damage may be undetected.

As detailed in the RTC and explained earlier in this notice, we identified that the states and affected industry have made considerable progress in recent years toward more effective management of coal combustion wastes. We also identified that the ability for most states to impose specific regulatory controls for coal combustion wastes has increased almost three-fold over the past 15 years. Forty-three states can now impose a liner requirements at landfills whereas 15 years ago, 11 had the same authority. In addition to regulatory permits, the majority of states now have authority to require siting controls, liners, leachate collection, groundwater monitoring, closure controls, and other controls and requirements for surface impoundments and landfills.

Nonetheless, we have concluded that there are still gaps in the actual application of these controls and

requirements, particularly for surface impoundments. While most states now have the appropriate authorities and regulations to require liners and groundwater monitoring that would reduce or minimize the risks that we have identified, we have also identified numerous situations where these controls are not being applied. For example, only 26 percent of utility surface impoundments and 57 percent of utility landfills have liner systems in place. We have insufficient information to determine whether the use of these controls is significantly different for non-utility disposal units, due to a small sample size.

While many of these unlined units may be subject to grandfathering provisions that allow them to continue to operate without being lined, or may not need to be lined due to site-specific conditions, we are especially concerned that a substantial number of units do not employ groundwater monitoring to ensure that if significant releases occur from these unlined units, they will be detected and controlled. In 1995, groundwater was monitored at only 38 percent of utility surface impoundments. While monitoring is more frequent at landfills, there are still many units at which releases of hazardous metals could go undetected. For example, of the approximately 300 utility landfills, 45 newer landfills (15%) do not monitor ground water. We are concerned that undetected releases could cause exceedences of drinking water or other health-based standards that may threaten public health or groundwater and surface water resources. Thus, we conclude that national regulations would lead to substantial improvements in the management of coal combustion wastes.

3. Minefilling

We have determined that the establishment of national regulations is warranted for coal combustion wastes when they are placed in surface or underground mines because: (a) We wind that these wastes when minefilled have the potential to present a danger to human health and the environment, (b) minefilling of these wastes has been an expanding practice and there are few states that currently operate comprehensive programs that specifically address the unique circumstances of minefilling, making it more likely that any damage to human health or the environment would go unnoticed or unaddressed, and (c) we believe that the cost of complying with regulations that address these potential dangers may not have a substantial impact on this practice because minefilling continues to grow in those few states that already have comprehensive programs.

We recognize that at this time, we cannot quantify the nature of damage that may be occurring or may occur in the future as a result of using coal combustion wastes as minefill. It is often impossible to determine if existing groundwater quality has been impacted by previous mining operations or as a result of releases of hazardous constituents from the coal combustion wastes used in minefilling applications. We have not as yet identified proven damage cases resulting from the use of coal combustion wastes for minefilling.

We also acknowledge that when the complexities related to site-specific geology, hydrology, waste chemistry and interactions with the surrounding matrix, and other relevant factors are properly taken into account, coal combustion wastes used as minefill can provide significant benefits. However, when not done properly, minefilling has the potential to contaminate ground water to levels that could damage human health and the environment. Based on materials submitted during the public comment period, coal combustion wastes used as minefill can lead to increases in hazardous metals released into ground water if the acidity within the mine overwhelms the capacity of the coal combustion wastes to neutralize the acidic conditions. This is due to the increased leaching of hazardous metals from the wastes. The potential for this to occur is further supported by data showing that management of coal combustion wastes in the presence of acid-generating pyritic wastes has caused metals to leach from the combustion wastes at much higher levels than are predicted by leach test data for coal combustion wastes when strongly acidic conditions are not present. Such strongly acidic conditions often exist at mining sites.

Although we have identified no damage cases involving minefilling, we are also aware of situations where coal combustion wastes are being placed in direct contact with ground water in both surface and underground mines. We concluded in our recent study of cement kiln dust management practices that placement of cement kiln dust in direct contact with ground water led to a substantially greater release of hazardous metals than we predicted would occur when the waste was placed above the water table. For this reason, we find that there is a potential for increased releases of hazardous metals as a result of placing coal combustion wastes in direct contact with groundwater. Also, there are damage cases associated with coal combustion wastes in landfills. The Agency believes it is reasonable to be concerned when similar quantities of coal combustion wastes are placed in mines, which often are not engineered disposal units and in some cases involve direct placement of wastes into direct contact with ground water.

We are concerned that government oversight is necessary to ensure that minefilling is done appropriately to protect human health and the environment, particularly since minefilling is a recent, but rapidly expanding use of coal combustion wastes. Government oversight has not yet ''caught up'' with the practice consistently across the country. There are some states that have programs that specifically address minefilling practices. We are likely to find that their programs or certain elements of their programs could serve as the basis for a comprehensive, flexible set of national management standards that ensure protection of human health and the environment. We also believe that these state programs will provide valuable experience in coordinating with SMCRA program requirements. However, at this time, few of the programs are comprehensive. Commenters pointed out, and we agree, there are significant gaps in other states. We believe that additional requirements for long-term groundwater monitoring, and controls on wastes placed directly into groundwater might be prudent.

E. What Approach Will EPA Take in Developing National Regulations?

We will not promulgate any regulations for beneficial uses other than minefilling. We do not wish to place any unnecessary barriers on the beneficial use of fossil fuel combustion wastes so that they can be used in applications that conserve natural resources and reduce disposal costs.

Once we concluded there is a need for some form of national regulation of coal combustion wastes disposed in landfills and surface impoundments and used as minefill, we considered two approaches. One approach would involve promulgating subtitle D regulations, pursuant to sections 1008 and 4004(a) of RCRA, that would contain criteria defining landfills and impoundments that would constitute ''sanitary landfills.'' Any facility that failed to meet the standards would constitute an open dump, which is prohibited by section 4005(a) of RCRA. Such standards would set a consistent baseline for protective management throughout the country. We would also work with the Department of Interior,

Office of Surface Mining to evaluate whether equivalent protectiveness for minefilling could be afforded by relying on revision of existing SMCRA regulations or by relying on a combination of RCRA and SMCRA authorities.

The second approach was to promulgate regulations pursuant to Subtitle C of RCRA, that would have been similar to our recent proposed regulation of cement kiln dust. Following this approach, EPA would develop national management standards based on the Subtitle D open dump criteria as discussed above, as well as a set of tailored Subtitle C requirements promulgated pursuant to RCRA section 3004(x). If the wastes were properly managed in accordance with the subtitle D-like standards, they would not be classified as hazardous wastes. When they were not properly managed, they would become listed hazardous wastes subject to tailored subtitle C standards. This scheme would be effective in each state authorized for the hazardous waste program when that state modified its hazardous waste program to incorporate the listing.

Under this approach, after states have adopted the contingent listing, facilities that have egregious or repeated violations of the management standards would be moved into the subtitle C program (subject to the tailored RCRA 3004 (x) requirements, rather than to the full set of subtitle C requirements). Thus, EPA would have authority to enforce the management standards.

The decision whether to establish regulations under subtitle C or D of RCRA for disposal of coal combustion wastes in landfills and surface impoundments and when minefilled was a difficult one. EPA believes that, in this case, either approach would ensure adequate protection of public health and the environment. Either subtitle C or D provides EPA with the authority to prescribe protective standards for the management of these wastes. Moreover, as described above, the standards that EPA would adopt under either regime, because of the flexibility provided by section 3004 (x), would be substantively the same. Also, under either approach, a facility that fails to comply with the standards is in violation of RCRA—in the case of subtitle C, the facility would be in violation of the tailored standards promulgated under section 3004(x). In the case of subtitle D, the facility would be in violation of the prohibition in section 4005(a) of RCRA against ''open dumping.'' The prohibition against open dumping is, however, enforceable only by private citizens and states, not EPA. Management standards established under the authority of subtitle C (including tailored section 3004(x) standards) are also enforceable by EPA. It appears that more than 40 states already have sufficient authority to implement most, if not all of the national standards we contemplate would be appropriate for surface impoundments and landfills. One difference between the two regimes may be that states could cite revised subtitle D standards as a basis for exercising their existing authorities more vigorously, potentially promoting swifter adoption of appropriate controls for surface impoundments and landfills. In addition, subtitle D standards would be applicable and enforceable by citizens as soon as the federal rule becomes effective. subtitle C standards in contrast, would not apply until incorporated into state subtitle C programs. For minefilling, we would also explore SMCRA as a possible mechanism to speed implementation, even if we relied on subtitle D to establish protective standards, because minefilling operations already are subject to SMCRA permitting authority.

Taking into account the common and distinct features of these alternative approaches, EPA believes at this time, based on the current record, that subtitle D regulations are the more appropriate mechanism for a number of reasons. In view of the very substantial progress that states have made in regulating disposal of fossil fuel combustion wastes in surface impoundments and landfills in recent years, as well as the active role that this industry has played recently in facilitating responsible waste disposal practices, EPA believes that subtitle D controls will provide sufficient clarity and incentive for states to close the remaining gaps in coverage, and for facilities to ensure that their wastes are managed properly.

For minefilling, although we have considerable concern about certain current practices (*e.g.,* placement directly into groundwater), we have not yet identified a case where placement of coal wastes can be determined to have actually caused increased damage to ground water. In addition, there is a federal regulatory program—SMCRA—expressly designed to address environmental risks associated with coal mines. Finally, given that states have been diligent in expanding and upgrading programs for surface impoundments and landfills, we believe they will be similarly responsive in addressing environmental concerns arising from this emerging practice. In short, we arrive at the same conclusions, for substantially the same reasons, for this practice as we did for landfills and surface impoundments: that subtitle D controls, or upgraded SMCRA controls or a combination of the two, should provide sufficient clarity and incentive to ensure proper handling of this waste when minefilled. Having determined that subtitle C regulation is not warranted for all other management practices, EPA does not see a basis in the record for carving this one practice out for separate regulatory treatment.

Once these subtitle D regulations are effective, facilities would be subject to citizen suits for any violation of the standards. If EPA were addressing wastes that had not been addressed by the states (or the federal government) in the past, or an industry with wide evidence of irresponsible solid waste management practices, EPA may well conclude that the additional incentives for improvement and compliance provided by the subtitle C scheme—the threat of federal enforcement and the stigma associated with improper management of RCRA subtitle C waste—were necessary. But the record before us indicates that the structure and the sanctions associated with a subtitle D approach (or a SMCRA approach if EPA determines it is equivalent) should be sufficient.

We also see a potential downside to pursuing a subtitle C approach. Section 8002(n)(8) directs us to consider, among other factors, ''the current and potential utilization of such materials.'' Industry commenters have indicated that they believe subjecting any coal combustion wastes to a subtitle C regime would place a significant stigma on these wastes, the most important effect being that it would adversely impact beneficial reuse. As we understand it, the concern is that, even though beneficially reused waste would not be hazardous under the contemplated subtitle C approach, the link to subtitle C would nonetheless tend to discourage purchase and re-use of the wastes or products made from the wastes. We do not wish to place any unnecessary barriers on the beneficial uses of these wastes, because they conserve natural resources, reduce disposal costs and reduce the total amount of waste destined for disposal. States and industry have also expressed concern that regulation under subtitle C could cause a halt in the use of coal combustion wastes to reclaim abandoned and active mine sites. If this were to occur, it would be unfortunate in that when done properly, we recognize this practice can lead to substantial environmental benefits. EPA believes the contingent management scheme we discussed should diminish

any stigma that might be associated with the subtitle C link. Nonetheless, we acknowledge the possibility that the approach could have unintended consequences. We would be particularly concerned about any adverse effect on the beneficial re-use market for these wastes because more than 23 percent (approximately 28 million tons) of the total coal combustion waste generated each year is beneficially reused and an additional eight percent (nine million tons) is used for minefilling. EPA believes that such reuse when performed properly, is by far the environmentally preferable destination for these wastes, including when minefilled. Normally, concerns about stigma are not a deciding factor in EPA's decisions under RCRA, given the central concern under the statute for protection of human health and the environment. However, given our conclusion that the subtitle D approach here should be fully effective in protecting human health and the environment, and given the large and salutary role that beneficial reuse plays for this waste, concern over stigma is a factor supporting our decision today that subtitle C regulation is unwarranted in light of our decision to pursue a subtitle D approach.

As we proceed with regulation development, we will also take enforcement action under RCRA section 7003 when we identify cases of imminent and substantial endangerment. We will also use Superfund remedial and emergency response authorities under the Comprehensive Environmental Response Compensation and Liabilities Act (CERCLA), as appropriate, to address damages that result in risk to human health and the environment. We will also take into account new information as it becomes available. We are awaiting a National Academy of Sciences report scheduled to be released in June 2000. This report will present a comprehensive review of mercury and recommendations on appropriate adverse health effects levels for this constituent. We believe that this report will enhance our understanding of the risks due to exposure to mercury, and we will review and assess its implications for today's decision on fossil fuel combustion wastes. These efforts may result in a re-evaluation of the risks posed by managing coal combustion wastes.

3. What Is the Basis for EPA's Regulatory Determination for Oil Combustion Wastes?

A. What Is the Agency's Decision Regarding the Regulatory Status of Oil Combustion Wastes and Why Did EPA Make This Decision?

We have determined that it is not appropriate to issue regulations under subtitle C of RCRA applicable to oil combustion wastes because: (a) We have not identified any beneficial uses that are likely to present significant risks to human health or the environment; and (b) except for a limited number of unlined surface impoundments, we have not identified any significant risks to human health and the environment associated with any waste management practices.

We intend to work with the State of Massachusetts and the owners and operators of the remaining two oil combustion facilities that currently manage their wastes in unlined surface impoundments to ensure that their wastes are managed in a manner that protects human health and the environment.

B. What Were EPA's Tentative Decisions as Presented in the Report to Congress and Why Did EPA Make That Decision?

In the Report to Congress, we stated that the only management scenario for which we found risks posed by management of oil combustion wastes was when oil combustion wastes are managed in unlined surface impoundments. The Report to Congress further explained that we were considering two approaches to address these identified risks. One approach was to regulate using RCRA subtitle C authority. The other approach was to encourage voluntary changes so that no oil combustion wastes are managed in unlined surface impoundments. This voluntary approach is based on recent industry and state regulatory trends to line oil combustion waste disposal units and implement groundwater monitoring.

We also tentatively decided that the existing beneficial uses of oil combustion wastes should remain exempt from RCRA subtitle C. There are few existing beneficial uses of these wastes, which include use in concrete products, structural fill, roadbed fill, and vanadium recovery. We determined that no significant risks to human health exist for the beneficial uses of these wastes. For the case of facilities that accept these wastes to recover vanadium from them, we explained that if the wastes resulting from the metal recovery processes are hazardous, they will be subject to existing hazardous waste requirements.

We found in most cases that OCW, whether managed alone or co-managed, are rarely characteristically hazardous. Additionally, we identified no significant ecological risks posed by land disposal of OCW. We identified only one documented damage case involving OCW in combination with coal combustion wastes, and it did not affect human receptors.

Although most of the disposed oil combustion wastes are managed in lined surface impoundments, we did identify six utility sites where wastes are managed in unlined units. We expressed particular concern with management of these wastes in unlined settling basins and impoundments that are designed and operated to discharge the aqueous portion of the wastes to ground water. Our risk analysis indicated that, in these situations, three metals—arsenic, nickel, and vanadium—may pose potential risk by the groundwater pathway.

C. How Did Commenters React to EPA's Tentative Decisions and What Was EPA's Analysis of Their Comments?

Because we were able to identify so few unlined surface impoundments, the only management scenario for which we found risks, the primary focus of the comments regarding oil combustion wastes was on the six unlined surface impoundments that we identified. In addition, there were extensive comments on our modeling and risk assessment methodology for the groundwater pathway that are applicable to our assessment of risks posed by oil combustion wastes.

1. How Did Commenters React to the Six Unlined Oil Combustion Waste Surface Impoundments That We Identified?

Comments. Industry commenters supported the approach to encourage voluntary changes in industry practices on a site-specific basis, and explained why they believed hazardous waste regulations are unnecessary. The environmental community supported the development of hazardous waste regulations.

EPA's Analysis of Comments. In the RTC, we identified that our only concern about oil combustion wastes was based on the potential for migration of arsenic, nickel, and vanadium from unlined surface impoundments. We requested information on this issue and did not receive any additional data and/or information to refute our tentative finding stated in the RTC that these

unlined surface impoundments could pose a significant risk.

As stated in the RTC, there are only six sites involving two companies that have unlined surface impoundments. Four of the sites are in Florida and are operated by one company. The company operating the four unlined impoundments in Florida is undertaking projects to mitigate potential risks posed by their unlined management units. At a May 21, 1999 public hearing, the company announced its plans to remove all the oil ash and basin material from its unlined impoundments and to line or close the units. The company informed us in January 2000 that it had completed the lining of all the units. Based on this information, we do not believe that these units pose a significant risk to human health and the environment.

The other two sites with unlined impoundments are operated by one utility in Massachusetts. Both sites are permitted under Massachusetts' ground water discharge permit program and have monitoring wells around the unlined basins. Arsenic is monitored for compliance with state regulations. Although the company expressed no plans to line their impoundments, they are preparing to implement monitoring for nickel and vanadium in ground water around the waste management units. We have been working with the State and the company to obtain additional information to evaluate these two management units. We will continue this effort and will work with the company and the State to ensure that any necessary measures are taken so that these wastes are managed in a manner that protects human health and the environment.

2. How Did Commenters React to the Groundwater Modeling and Risk Assessment Analyses Conducted by EPA to Support Its Findings in the Report to Congress?

Comments. Industry and public interest group commenters submitted detailed critiques of the ground water model, EPACMTP, that we used for our risk analysis. Industry commenters believe that the model will overestimate the levels of contaminants that may migrate down-gradient from disposed wastes. Environmental groups expressed the opposite belief; that is, that the model underestimates down-gradient chemical concentrations and, therefore, underestimates the potential risk posed by oil combustion wastes.

EPA's Analysis of the Comments. We are carefully reviewing all of the comments on the model and have determined that the process of thoroughly investigating all of the comments will take substantially more time to complete than is available within the court deadline for issuing this regulatory determination. At this time, we are uncertain of the overall outcome of our analysis of the issues raised in the comments. Accordingly, we have decided not to use the results of our ground water pathway risk analysis in support of today's regulatory determination on fossil fuel combustion wastes. As explained above, we believe that actions have been taken or are under way by specific companies and/or the State of Massachusetts to address potential risks at the six impoundments that we have been able to identify. Therefore we believe that further groundwater analysis is unnecessary at this time.

Meanwhile, we will continue with our analysis of comments on the groundwater model and risk analysis. This may involve changing or restructuring various aspects of the model, if appropriate. It may also include additional analyses to determine whether any changes to the model or modeling methodology would materially affect the groundwater risk analysis results that were reported in the RTC. If our investigations reveal that a reanalysis of groundwater risks is appropriate, we will conduct the analysis and reevaluate today's decisions as appropriate.

In addition to our ongoing review of comments on the groundwater model, one element of the model—the metals partitioning component called ''MINTEQ''—has been proposed for additional peer review. When this additional peer review is completed, we will take the findings and recommendations into account in any overall decision to re-evaluate today's regulatory determination.

D. What Is the Basis for Today's Decisions?

We have determined that it is not appropriate to establish national regulations applicable to oil combustion wastes because: (a) We have not identified any beneficial uses that are likely to present significant risks to human health or the environment; and (b) except for two remaining unlined surface impoundments, we have not identified any significant risks to human health and the environment associated with any waste management practices. As explained in the previous section, we intend to work with the State of Massachusetts and the owners and operators of the remaining two oil combustion facilities that currently manage their wastes in unlined surface impoundments to ensure that any necessary measures are taken so that their wastes are managed in a manner that protects human health and the environment. Given the limited number of sites at issue and our ability to adequately address risks from these waste management units through site-specific response measures, we see no need for issuing regulations under subtitle C or D of RCRA.

4. What Is the Basis for EPA's Regulatory Determination for Natural Gas Combustion Wastes?

A. What Is the Decision Regarding the Regulatory Status of Natural Gas Combustion Wastes?

For the reasons described in the Report to Congress (pages 7–1 to 7–3), EPA has decided that regulation of natural gas combustion wastes as hazardous wastes under RCRA subtitle C or D is not warranted. The burning of natural gas generates virtually no solid waste.

B. What Was EPA's Tentative Decision as Presented in the Report to Congress?

The Agency's tentative decision was to retain the subtitle C exemption for natural gas combustion because virtually no solid waste is generated.

C. How Did Commenters React to EPA's Tentative Decision?

No commenters on the RTC disagreed with EPA's findings or its tentative decision to continue the exemption for natural gas combustion wastes.

Specific comments on this issue supported our tentative decision to retain the exemption for natural gas combustion waste. One industry association encouraged us to foster the use of natural gas as a substitute for other fossil fuels. While some public interest group commenters disagreed broadly with our tentative conclusions to retain the exemption for fossil fuel combustion wastes, they did not specifically address natural gas combustion wastes.

D. What Is the Basis for Today's Decision?

The burning of natural gas generates virtually no solid waste. We, therefore, believe that there is no basis for EPA developing subtitle C or D regulations applicable to natural gas combustion wastes.

5. What Is the History of EPA's Regulatory Determinations for Fossil Fuel Combustion Wastes?

A. On What Basis Is EPA Required To Make Regulatory Determinations Regarding the Regulatory Status of Fossil Fuel Combustion Wastes?

Section 3001(b)(3)(C) of the Resource Conservation and Recovery Act (RCRA) as amended requires that, after completing a Report to Congress mandated by section 8002(n) of RCRA, the EPA Administrator must determine whether Subtitle C (hazardous waste) regulation of fossil fuel combustion wastes is warranted.

B. What Was EPA's General Approach in Making These Regulatory Determinations?

We began our effort to make our determination of the regulatory status of fossil fuel combustion wastes by studying high volume coal combustion wastes managed separately from other fossil fuel combustion wastes that are generated by electric utilities. In February 1988, EPA published the Report to Congress on Wastes from the Combustion of Coal by Electric Utility Power Plants. The report addressed four large-volume coal combustion wastes generated by electric utilities and independent power producers when managed alone. The four wastes are fly ash, bottom ash, boiler slag, and flue gas desulfurization (FGD) wastes. The report did not address co-managed utility coal combustion wastes (UCCWs), other fossil fuel wastes generated by utilities, or wastes from non-utility boilers burning any type of fossil fuel. Because of other priorities at the time, we did not immediately complete a determination of the regulatory status of these large-volume coal combustion wastes.

C. What Happened When EPA Failed To Issue Its Determination of the Regulatory Status of the Large Volume Utility Combustion Wastes in a Timely Manner?

In 1991, a suit was filed against EPA for not completing a regulatory determination on fossil fuel combustion wastes (*Gearhart* v. *Reilly,* Civil No. 91–2345 (D.D.C.)). On June 30, 1992, the Agency entered into a Consent Decree that established a schedule for us to complete the regulatory determination for all fossil fuel combustion wastes in two phases:

- The first phase covers fly ash, bottom ash, boiler slag, and flue gas emission control wastes from the combustion of coal by electric utilities and independent commercial power producers. These are the four large volume wastes that were the subject of the 1988 Report to Congress described above. We refer to this as the Part 1 regulatory determination.
- The second phase covers all of the ''remaining'' fossil fuel combustion wastes not covered in the Part 1 regulatory determination. We refer to this as the Part 2 regulatory determination, which is the subject of today's action. Under the current court-order, EPA was directed to issue the Part 2 regulatory determination by April 25, 2000.

D. When Was the Part 1 Regulatory Decision Made and What Were EPA's Findings?

In 1993, EPA issued the Part 1 regulatory determination, in which we retained the exemption for Part 1 wastes (see 58 FR 42466; August 9, 1993). The four Part 1 large-volume utility coal combustion wastes (UCCWs) are also addressed in the Part 2 regulatory determination when they are co-managed with low-volume fossil fuel combustion wastes not covered in the Part 1 determination.

6. Executive Orders and Laws Addressed in Today's Action

A. Executive Order 12866—Determination of Significance

Under Executive Order 12866, (58 FR 51735, Oct. 4, 1993) we must determine whether the regulatory action is ''significant'' and therefore subject to review by the Office of Management and Budget (OMB) and the requirements of the Executive Order. The Order defines ''significant regulatory action'' as one that is likely to result in a rule that may:

- Have an annual effect on the economy of $100 million or more or adversely affect in a material way the economy, a sector of the economy, productivity, competition, jobs, the environment, public health or safety, or State, local, or tribal governments or communities;
- Create a serious inconsistency or otherwise interfere with an action taken or planned by another agency;
- Materially alter the budgetary impact of entitlements, grants, user fees, or loan programs or the rights and obligations of recipients thereof; or
- Raise novel legal or policy issues arising out of legal mandates, the President's priorities, or the principles in the Executive Order.''

Under Executive Order 12866, this is a ''significant regulatory action.'' Thus, we have submitted this action to OMB for review. Changes made in response to OMB suggestions or recommendations are documented in the public record.

B. Regulatory Flexibility Act (RFA), as Amended by the Small Business Regulatory Enforcement Fairness Act of 1996 (SBREFA), 5 U.S.C. 601 et seq.

Today's action is not subject to the RFA, which generally requires an agency to prepare a regulatory flexibility analysis for any rule that will have a significant economic impact on a substantial number of small entities. The RFA applies only to rules subject to notice-and-comment rulemaking requirements under the Administrative Procedure Act (APA) or any other statute. This action is not subject to notice and comment requirements under the APA or any other statute. Today's action is being taken pursuant to section 3001(b)(3)(C) of the Resource Conservation and Recovery Act. This provision requires EPA to make a determination whether to regulate fossil fuel combustion wastes after submission of its Report to Congress and public hearings and an opportunity for comment. This provision does not require the publication of a notice of proposed rulemaking and today's action is not a regulation. *See American Portland Cement Alliance* v. *E.P.A.,* 101 F.3d 772 (D.C.Cir. 1996).

C. Paperwork Reduction Act Information Collection Requests

Today's final action contains no information collection requirements.

D. Unfunded Mandates Reform Act

Today's action is not subject to the requirements of sections 202 and 205 of the Unfunded Mandates Reform Act of 1995 (UMRA), Public Law 104–4. Title II of UMRA establishes requirements for federal agencies to assess the effects of their regulatory actions on state, local, and tribal governments and the private sector. Under section 202 of the UMRA, EPA generally must prepare a written statement, including a cost-benefit analysis, for proposed and final rules with ''federal mandates'' that may result in expenditures to state, local, and tribal governments, in the aggregate, or to the private sector, of $100 million or more in any one year.

Before we issue a rule for which a written statement is needed, section 205 of the UMRA generally requires us to identify and consider a reasonable number of regulatory alternatives and adopt the least costly, most cost-effective, or least burdensome alternative that achieves the rule's objectives. Section 205 doesn't apply when it is inconsistent with applicable law. Moreover, section 205 allows us to adopt an alternative other than the least costly, most cost-effective, or least

burdensome alternative if the final rule explains why that alternative was not adopted. Before we establish any regulatory requirements that may significantly affect small governments, including tribal governments, we must have developed under section 203 of the UMRA a small-government-agency plan. The plan must provide for notifying potentially affected small governments, enabling them to have meaningful and timely input in the developing EPA regulatory proposals with significant federal intergovernmental mandates, and informing, educating, and advising small governments on compliance with the regulatory requirements.

Today's final action contains no federal mandates (under the regulatory provisions of Title II of the UMRA) for state, local, or tribal governments or the private sector. Today's final action imposes no enforceable duty on any state, local or tribal governments or the private sector.

In addition, we have determined this action contains no federal mandate that may result in expenditures of $100 million or more for state, local, and tribal governments, in the aggregate, or the private sector in any one year.

E. Executive Order 13132: Federalism

Executive Order 13132, entitled Federalism (64 FR 43255, August 10, 1999) requires us to develop an accountable process to ensure meaningful and timely input by state and local officials in the development of regulatory policies that have federalism implications. The executive order defines policies that have federalism implications to include regulations that have substantial direct effects on the states, on the relationship between the national government and the states, or on the distribution of power and responsibilities among the various levels of government.

Under section 6 of Executive Order 13132, we may issue a regulation that has federalism implications, that imposes substantial direct compliance costs, and that isn't required by statute, only if the federal government provides funds the direct compliance costs incurred by state and local governments, or if EPA consults with state and local officials early in the development of the proposed regulation. Also, EPA may issue a regulation that has federalism implications and that preempts state law, only if we consult with state and local officials early in the development of the proposed regulation.

If EPA complies by consulting, Executive Order 13132 requires us to provide OMB, in a separately identified section of the rule's preamble, a federalism summary impact statement (FSIS). The FSIS must describe the extent of our prior consultation with state and local officials, summarizing the nature of their concerns and our position supporting the need for the regulation, and state the extent to which the concerns of state and local officials have been met. Also, when we transmit a draft final rule with federalism implications to OMB for review under Executive Order 12866, our federalism official must include a certification that EPA has met the requirements of Executive Order 13132 in a meaningful and timely manner.

Today's final action does not have federalism implications. It will not have a substantial direct affect on the States, on the relationship between the national government and the States, or on the distribution of power and responsibilities among the various levels of government, as specified in Executive Order 13132. This is because no requirements are imposed by today's action, and EPA is not otherwise mandating any state or local government actions. Thus, the requirements of section 6 of the Executive Order do not apply to this final action.

F. Executive Order 13084: Consultation and Coordination With Indian Tribal Governments

Under Executive Order 13084, EPA may take an action that isn't required by statute, that significantly or uniquely affects the communities of Indian tribal governments, and that imposes substantial direct compliance costs on those communities, only if the federal government provides the funds necessary to pay the direct compliance costs incurred by the tribal governments or EPA consults with those governments. If EPA complies by consulting, Executive Order 13084 requires us to describe in a separately identified section of the preamble to the rule the extent of our prior consultation with representatives of affected tribal governments, summarizing of the nature of their concerns, and state the need for the regulation. Also, Executive Order 13084 requires EPA to develop an effective process permitting elected officials and other representatives of Indian tribal governments ''to provide meaningful and timely input in the development of regulatory policies on matters that significantly or uniquely affect their communities.''

Today's final action does not significantly or uniquely affect the communities of Indian tribal governments. This is because today's action by EPA involves no regulations or other requirements that significantly or uniquely affect Indian tribal governments. So, the requirements of section 3(b) of Executive Order 13084 do not apply to this action.

G. Executive Order 13045: Protection of Children From Environmental Health Risks and Safety Risks

''Protection of Children from Environmental Health Risks and Safety Risks'' (62 FR 19885, April 23, 1997) applies to any rule that: (1) Is ''economically significant'' as defined under Executive Order 12866, and (2) concerns an environmental health or safety risk that EPA has reason to believe may have a disproportionate effect on children. If the regulatory action meets both criteria, we must evaluate the environmental health or safety effects of the planned rule on children and explain why the planned regulation is preferable to other potentially effective and reasonably feasible alternatives considered by the Agency.

Today's final action isn't subject to the Executive Order because it is not economically significant as defined in Executive Order 12866, and because we have no reason to believe the environmental health or safety risks addressed by this action present a disproportionate risk to children. Risks were thoroughly evaluated during the course of developing today's decision and were determined not to disproportionately affect children.

H. National Technology Transfer and Advancement Act of 1995

As noted in the proposed rule, section 12(d) of the National Technology Transfer and Advancement Act of 1995 (''NTTAA''), Public Law. No. 104–113, section12(d) (15 U.S.C. 272 note) directs EPA to use voluntary-consensus standards in its regulatory activities unless doing so would be inconsistent with applicable law or otherwise impractical. Voluntary-consensus standards are technical standards (such as materials specifications, test methods, sampling procedures, and business practices) that are developed or adopted by voluntary-consensus standards bodies. The NTTAA directs us to explain to Congress, through OMB, when we decide not to use available and applicable voluntary-consensus standards.

Today's final action involves no technical standards. So, EPA didn't consider using any voluntary-consensus standards.

I. Executive Order 12898: Environmental Justice

EPA is committed to addressing environmental justice concerns and is assuming a leadership role in environmental justice initiatives to enhance environmental quality for all populations in the United States. The Agency's goals are to ensure that no segment of the population, regardless of race, color, national origin, or income bears disproportionately high and adverse human health or environmental impacts as a result of EPA's policies, programs, and activities, and that all people live in safe and healthful environments. In response to Executive Order 12898 and to concerns voiced by many groups outside the Agency, EPA's Office of Solid Waste and Emergency Response formed an Environmental Justice Task Force to analyze the array of environmental justice issues specific to waste programs and to develop an overall strategy to identify and address these issues (OSWER Directive No. 9200.317).

J. Congressional Review Act

The Congressional Review Act, 5 U.S.C. 801 *et seq.,* as added by the Small Business Regulatory Enforcement Fairness Act of 1996, does not apply because this action is not a rule for purposes of 5 U.S.C. 804(3). Rather, this action is an order as defined by 5 U.S.C. 551(6).

7. How To Obtain More Information

Documents related to this regulatory determination, including EPA's response to the public comments, are available for inspection in the docket. The relevant docket numbers are: F–99–FF2D–FFFFF for the regulatory determination, and F–99–FF2P–FFFFF for the RTC. The RCRA Docket Information Center (RIC), is located at Crystal Gateway I, First Floor, 1235 Jefferson Davis Highway, Arlington, VA. The RIC is open from 9 a.m. to 4 p.m., Monday through Friday, excluding Federal holidays. To review docket materials, it is recommended that the public make an appointment by calling 703-603–9230. The public may copy a maximum of 100 pages from any regulatory docket at no charge. Additional copies cost $0.15/page. The index and some supporting materials are available electronically. See the Supplementary Information section for information on accessing them.

List of Subjects in 40 CFR Part 261

Fossil fuel combustion waste, Coal combustion, Gas combustion, Oil combustion, Special wastes, Bevill exemption

Dated: April 25, 2000.

Carol M. Browner,

Administrator.

[FR Doc. 00–11138 Filed 5–19–00; 8:45 am]

BILLING CODE 6560–50–U

Federal Register

Monday,
May 22, 2000

Part IV

Department of Housing and Urban Development

24 CFR Part 2003

Implementation of the Privacy Act of 1974; Proposed Rule

Privacy Act of 1974; Proposed Amendment of Routine Uses Applicable to Existing Systems of Records, and Establishment of Two New Systems of Records; Notice

DEPARTMENT OF HOUSING AND URBAN DEVELOPMENT

24 CFR Part 2003

[Docket No. FR–4575–P–02]

RIN 2508–AA11

Implementation of the Privacy Act of 1974

AGENCY: Office of Inspector General, HUD.

ACTION: Proposed rule.

SUMMARY: This proposed rule would amend the regulations of the Office of Inspector General (OIG) that implement the Privacy Act of 1974 to conform these regulations to the OIG's notice adding two new systems of records to the four systems of records already in existence.

DATES: *Comment Due Date:* July 21, 2000.

ADDRESSES: Interested persons are invited to submit comments regarding this proposed rule to the Rules Docket Clerk, Office of General Counsel, Room 10278, Department of Housing and Urban Development, 451 Seventh Street, SW, Washington, DC 20410. Communications should refer to the above docket number and title. A copy of each communication submitted will be available for public inspection and copying between 7:30 a.m. and 5:30 p.m. weekdays at the above address.

FOR FURTHER INFORMATION CONTACT: Bryan Saddler, Acting Counsel to the Inspector General, Room 8260, Department of Housing and Urban Development, 451 Seventh Street, SW, Washington, DC 20410, (202) 708–1613. (This is not a toll free number.) A telecommunications device for hearing- and speech-impaired persons (TTY) is available at 1–800–877–8339 (Federal Information Relay Services). (This is a toll-free number.)

SUPPLEMENTARY INFORMATION:

Background

The Inspector General Act of 1978 (5 U.S.C. App. 3) was enacted to create independent and objective units to perform various investigative and monitoring functions in several Executive Agencies of the Federal Government, including the Department of Housing and Urban Development (HUD). This Act confers broad authority upon the Inspector General to conduct independent investigations, audits, and other activities. Consistent with its statutory independence, the OIG of HUD adopted separate regulations at 24 CFR Chapter XII. Chapter XII is applicable to such OIG matters as availability of information to the public (part 2002) and production of information in response to subpoenas or demands of courts or other authorities (part 2004). *See* 57 FR 2225, January 21, 1992.

In June 1992, the Inspector General of HUD also adopted part 2003 of Chapter XII, for the purpose of implementing the requirements of the Privacy Act of 1974 (5 U.S.C. 552a) with respect to OIG records. Part 2003 generally incorporated the Department's existing Privacy Act regulations (24 CFR part 16), but also contained a series of general and specific exemptions for three of OIG's four existing systems of records.

This proposed rule would amend these regulations consistent with the OIG notice, published elsewhere in this **Federal Register**, that adds two new systems of records to the four systems of records already in existence.

Findings and Certifications

Environmental Review

This proposed rule does not direct, provide for assistance or loan and mortgage insurance for, or otherwise govern or regulate real property acquisition, disposition, leasing, rehabilitation, alteration, demolition, or new construction, or establish , revise, or provide for standards for construction or construction materials, manufactured housing or occupancy. Accordingly, under 24 CFR 50.19(c)(1), this issuance is categorically excluded from environmental review under the National Environmental Policy Act of 1969, as amended (42 U.S.C. 4321).

Regulatory Flexibility Act

This rule would not create a significant economic impact on a substantial number of small entities. This rule is limited to proposing to make a conforming amendment to existing regulations.

While HUD has determined that this rule would not have a significant economic impact on a substantial number of small entities, HUD welcomes any comments regarding alternatives to this rule that would meet HUD's objectives, as described in this preamble, and would be less burdensome to small entities.

Executive Order 13132, Federalism

This rule does not have Federalism implications and does not impose substantial direct compliance costs on State and local governments or preempt State law within the meaning of Executive Order 13132.

Unfunded Mandates Reform Act

Title II of the Unfunded Mandates Reform Act of 1995 (Pub. L. 104–4, 109 Stat. 48, 64, codified at 2 U.S.C. 1531–1538) (UMRA) requires Federal agencies to assess the effects of their regulatory actions on State, local, and tribal governments and on the private sector. This proposed rule does not impose, within the meaning of the UMRA, any Federal mandates on any State, local, or, tribal governments or on the private sector.

List of Subjects in 24 CFR Part 2003

Privacy.

Accordingly, 24 CFR chapter XII, part 2003, is proposed to be amended to read as follows:

PART 2003—IMPLEMENTATION OF THE PRIVACY ACT OF 1974

1. The authority citation for part 2003 is revised to read as follows:

Authority: 5 U.S.C. 552a; 5 U.S.C. App. 3 (Inspector General Act of 1978); 42 U.S.C. 3535(d).

2. In § 2003.8, the introductory text of paragraph (a) is revised to read as follows:

§ 2003.8 General exemptions.

(a) The systems of records entitled ''Investigative Files of the Office of Inspector General,'' ''Hotline Complaint Files of the Office of Inspector General,'' ''Name Indices System of the Office of Inspector General,'' and ''AutoInvestigation of the Office of Inspector General'' consist, in part, of information compiled by the OIG for the purpose of criminal law enforcement investigations. Therefore, to the extent that information in these systems falls within the scope of exemption (j)(2) of the Privacy Act, 5 U.S.C. 552a(j)(2), these systems of records are exempt from the requirements of the following subsections of the Privacy Act, for the reasons stated below.

* * * * *

3. In § 2003.9, the introductory text of paragraph (a) is revised, and paragraph (b) is revised, to read as follows:

§ 2003.9 Specific Exemptions.

(a) The systems of records entitled ''Investigative Files of the Office of Inspector General,'' ''Hotline Complaint Files of the Office of Inspector General,'' ''Name Indices System of the Office of Inspector General,'' and ''AutoInvestigation of the Office of Inspector General'' consist, in part, of investigatory material compiled by the OIG for law enforcement purposes. Therefore, to the extent that information

in these systems falls within the coverage of exemption (k)(2) of the Privacy Act, 5 U.S.C. 552a(k)(2), these systems of records are exempt from the requirements of the following subsections of the Privacy Act, for the reasons stated below.

* * * * *

(b) The systems of records entitled ''Investigative Files of the Office of Inspector General,'' ''Hotline Complaint Files of the Office of Inspector General,'' ''Name Indices System of the Office of Inspector General,'' and ''AutoInvestigation of the Office of Inspector General'' consist in part of investigatory material compiled by the OIG for the purpose of determining suitability, eligibility, or qualifications for Federal civilian employment or Federal contracts, the release of which would reveal the identity of a source who furnished information to the Government under an express promise that the identity of the source would be held in confidence. Therefore, to the extent that information in these systems fall within the coverage of exemption (k)(5) of the Privacy Act, 5 U.S.C. 552a(k)(5), these systems of records are exempt from the requirements of subsection (d)(1), because release would reveal the identity of a source who furnished information to the Government under an express promise of confidentiality. Revealing the identity of a confidential source could impede future cooperation by sources, and could result in harassment or harm to such sources.

Dated: April 25, 2000.

Susan Gaffney,

Inspector General.

[FR Doc. 00–12711 Filed 5–19–00; 8:45 am]

BILLING CODE 4210–01–P

DEPARTMENT OF HOUSING AND URBAN DEVELOPMENT

[Docket No. FR–4575–N–01]

Privacy Act of 1974; Proposed Amendment of Routine Uses Applicable to Existing Systems of Records, and Establishment of Two New Systems of Records

AGENCY: Office of Inspector General, HUD.

ACTION: Notification of Proposed Amendment of Routine Uses Applicable to Existing Systems of Records, and Establishment of Two New Systems of Records.

SUMMARY: In accordance with the Privacy Act of 1974 (5 U.S.C. 552a), the Office of Inspector General (OIG) gives notice that it proposes to amend the routine uses applicable to its four existing systems of records, and to establish two new systems of records. The amendment adds two new routine uses to the five uses currently applicable to OIG's four existing systems of records. The new routine uses permit disclosure: to State boards of accountancy, for potential disciplinary action against independent public accountants; and to the Department of Justice (''DOJ''), for use in litigation. This two new systems of records established are the AutoAudit (HUD/OIG–5) and the AutoInvestigation (HUD/OIG–6). These systems of records are automated information tracking and storage systems employed in connection with OIG audits and investigations commenced on or after June 1, 2000.

DATES: *Effective Date:* This proposal shall become effective without further notice on June 21, 2000, unless comments are received on or before that date which would result in a contrary determination.

Comment Due Date: June 21, 2000.

ADDRESSES: Interested persons are invited to submit comments regarding this notice to the Rules Docket Clerk, Office of General Counsel, Room 10276, Department of Housing and Urban Development, 451 7th Street, SW, Washington, DC 20410–0500. Communications should refer to the above docket number and title. Comments submitted by facsimile (FAX) will not be accepted. A copy of each communication submitted will be available for public inspection and copying between 7:30 a.m. and 5:30 p.m. weekdays at the above address.

FOR FURTHER INFORMATION CONTACT: For Privacy Act information: Jeanette Smith, Departmental Privacy Act Officer, Telephone Number (202) 708–2374. For OIG-related information: Bryan Saddler, Acting Counsel to the Inspector General, Office of Inspector General, Telephone Number (202) 708–1613. (These are not toll free numbers). A telecommunications device for hearing- and speech-impaired persons (TTY) is available at 1–800–877–8339 (Federal Information Relay Services). (This is a toll-free number).

SUPPLEMENTARY INFORMATION:

Revision of Existing Systems of Records

The OIG, pursuant to the Privacy Act of 1974, currently maintains four systems of records: (l) Investigative Files of the Office of Inspector General (HUD/OIG–1); (2) Hotline Complaint Files of the Office of Inspector General (HUD/OIG–2); (3) Name Indices System of the Office of Inspector General (HUD/OIG–3); and (4) Independent Auditor Monitoring Files of the Office of Inspector General (HUD/OIG–4). The notice for these systems of records was last published on June 12, 1992 (57 FR 25069). The two additional routine uses being made applicable to OIG's four existing systems of records will permit disclosure: (1) To State boards of accountancy, for potential disciplinary action against independent public accountants; and (2) to the Department of Justice, for use in litigation. All other aspects of OIG's four existing systems of records remain unchanged and are as published at 57 FR 25069.

Sections 552a(e)(4) and (11) of title 5, United States Code provide that an agency publish a notice of the establishment or revision of a record system which affords the public a 30-day period in which to submit comments. To meet this requirement, the texts of the new routine uses are printed below. Further, a report of the OIG's intention to amend the routine uses applicable to its four existing systems of records has been submitted to the Committee on Government Operations of the House of Representatives, the Committee on Governmental Affairs of the Senate, and the Office of Management and Budget (OMB), pursuant to paragraph 4b of Appendix I of OMB Circular A–130, which is entitled ''Federal Agency Responsibilities for Maintaining Records About Individuals'' (50 FR 52730, December 24, 1985).

Establishment of New Systems of Records

AutoAudit and AutoInvestigation, OIG's new automated information tracking and storage systems, will effectively consolidate and expand upon information included in OIG's four existing systems of records. AutoAudit and AutoInvestigation are designed to function as tools to create, maintain and manage audits and investigations in a centralized, paper-less environment. Records maintained in AutoAudit and AutoInvestigation may be accessed by reference to any information field entered into such systems, including name, alias, social security number, address, etc.

The AutoAudit and AutoInvestigation systems notices required under section 552a are also printed below. Additionally, a report of the OIG's intention to establish the two new systems has been submitted to the Committee on Government Operations of the House of Representatives, the Committee on Governmental Affairs of the Senate, and OMB.

Accordingly, the notice, pursuant to 5 U.S.C. 552a(e)(4) and (11), of revisions to OIG's four existing systems of records and the establishment of two new systems of records follows:

HUD/OIG–1

SYSTEM NAME:

Investigative Files of the Office of Inspector General.

* * * * *

ROUTINE USES OF RECORDS MAINTAINED IN THE SYSTEM, INCLUDING CATEGORIES OF USERS AND THE PURPOSES OF SUCH USES:

In addition to those disclosures generally permitted under subsection (b) of the Privacy Act of 1974, 5 U.S.C. 552a(b), records may also be disclosed routinely to other users under the following circumstances:

1. In the event that records indicate a violation or potential violation of law, whether criminal, civil or regulatory in nature, the relevant records may be disclosed to the appropriate federal, State or local agency charged with the responsibility for investigating or prosecuting such violation or enforcing or implementing such statute, rule or regulation.

2. Records may be disclosed to a congressional office in response to an inquiry from that congressional office made at the request of the individual who is the subject of the records.

3. Records may be disclosed to HUD contractors, Public Housing Authorities or management agents of HUD-assisted housing projects, in order to assist such entities in taking action to recover money or property, where such recovery serves to promote the integrity of the programs or operations of HUD.

4. Records may be disclosed during the course of an administrative proceeding where HUD is a party to the

litigation and the disclosure is relevant and reasonably necessary to adjudicate the matter.

5. Records may be disclosed to any source, either private or governmental, to the extent necessary to elicit information relevant to an OIG investigation.

6. Records may be disclosed to appropriate State boards of accountancy for possible administrative or disciplinary sanctions such as license revocation. These referrals will be made only after the independent auditor has been notified that the OIG is contemplating disclosure of its findings to an appropriate State board of accountancy, and the independent auditor has been provided with an opportunity to respond in writing to the OIG's findings.

7. Records may be disclosed to DOJ for litigation purposes associated with the representation of OIG and/or HUD before the courts.

* * * * *

HUD/OIG–2

SYSTEM NAME: HOTLINE COMPLAINT FILES OF THE OFFICE OF INSPECTOR GENERAL

* * * * *

ROUTINE USES OF RECORDS MAINTAINED IN THE SYSTEM, INCLUDING CATEGORIES OF USERS AND THE PURPOSES OF SUCH USES:

In addition to those disclosures generally permitted under subsection (b) of the Privacy Act of 1974, 5 U.S.C. 552a(b), records may also be disclosed routinely to other users under the following circumstances:

1. In the event that records indicate a violation or potential violation of law, whether criminal, civil or regulatory in nature, the relevant records may be disclosed to the appropriate federal, State or local agency charged with the responsibility for investigating or prosecuting such violation or enforcing or implementing such statute, rule or regulation.

2. Records may be disclosed to a congressional office in response to an inquiry from that congressional office made at the request of the individual who is the subject of the records.

3. Records may be disclosed to HUD contractors, Public Housing Authorities or management agents of HUD-assisted housing projects, in order to assist such entities in taking action to recover money or property, where such recovery serves to promote the integrity of the programs or operations of HUD.

4. Records may be disclosed during the course of an administrative proceeding where HUD is a party to the litigation and the disclosure is relevant and reasonably necessary to adjudicate the matter.

5. Records may be disclosed to any source, either private or governmental, to the extent necessary to elicit information relevant to an OIG investigation.

6. Records may be disclosed to appropriate State boards of accountancy for possible administrative or disciplinary sanctions such as license revocation. These referrals will be made only after the independent auditor has been notified that the OIG is contemplating disclosure of its findings to an appropriate State board of accountancy, and the independent auditor has been provided with an opportunity to respond in writing to the OIG's findings.

7. Records may be disclosed to DOJ for litigation purposes associated with the representation of OIG and/or HUD before the courts.

* * * * *

HUD/OIG–3

SYSTEM NAME:

Name Indices System of the Office of Inspector General.

* * * * *

ROUTINE USES OF RECORDS MAINTAINED IN THE SYSTEM, INCLUDING CATEGORIES OF USERS AND THE PURPOSES OF SUCH USES:

In addition to those disclosures generally permitted under subsection (b) of the Privacy Act of 1974, 5 U.S.C. 552a(b), records may also be disclosed routinely to other users under the following circumstances:

1. In the event that records indicate a violation or potential violation of law, whether criminal, civil or regulatory in nature, the relevant records may be disclosed to the appropriate federal, State or local agency charged with the responsibility for investigating or prosecuting such violation or enforcing or implementing such statute, rule or regulation.

2. Records may be disclosed to a congressional office in response to an inquiry from that congressional office made at the request of the individual who is the subject of the records.

3. Records may be disclosed to HUD contractors, Public Housing Authorities or management agents of HUD-assisted housing projects, in order to assist such entities in taking action to recover money or property, where such recovery serves to promote the integrity of the programs or operations of HUD.

4. Records may be disclosed during the course of an administrative proceeding where HUD is a party to the litigation and the disclosure is relevant and reasonably necessary to adjudicate the matter.

5. Records may be disclosed to any source, either private or governmental, to the extent necessary to elicit information relevant to an OIG investigation.

6. Records may be disclosed to appropriate State boards of accountancy for possible administrative or disciplinary sanctions such as license revocation. These referrals will be made only after the independent auditor has been notified that the OIG is contemplating disclosure of its findings to an appropriate State board of accountancy, and the independent auditor has been provided with an opportunity to respond in writing to the OIG's findings.

7. Records may be disclosed to DOJ for litigation purposes associated with the representation of OIG and/or HUD before the courts.

* * * * *

HUD/OIG–4

SYSTEM NAME:

Independent Auditor Monitoring Files of the Office of Inspector General.

* * * * *

ROUTINE USES OF RECORDS MAINTAINED IN THE SYSTEM, INCLUDING CATEGORIES OF USERS AND THE PURPOSES OF SUCH USES:

In addition to those disclosures generally permitted under subsection (b) of the Privacy Act of 1974, 5 U.S.C. 552a(b), records may also be disclosed routinely to other users under the following circumstances:

1. In the event that records indicate a violation or potential violation of law, whether criminal, civil or regulatory in nature, the relevant records may be disclosed to the appropriate federal, State or local agency charged with the responsibility for investigating or prosecuting such violation or enforcing or implementing such statute, rule or regulation.

2. Records may be disclosed to a congressional office in response to an inquiry from that congressional office made at the request of the individual who is the subject of the records.

3. Records may be disclosed to HUD contractors, Public Housing Authorities or management agents of HUD-assisted housing projects, in order to assist such entities in taking action to recover money or property, where such recovery serves to promote the integrity of the programs or operations of HUD.

4. Records may be disclosed during the course of an administrative proceeding where HUD is a party to the litigation and the disclosure is relevant and reasonably necessary to adjudicate the matter.

5. Records may be disclosed to any source, either private or governmental, to the extent necessary to elicit information relevant to an OIG investigation.

6. Records may be disclosed to appropriate State boards of accountancy for possible administrative or disciplinary sanctions such as license revocation. These referrals will be made only after the independent auditor has been notified that the OIG is contemplating disclosure of its findings to an appropriate State board of accountancy, and the independent auditor has been provided with an opportunity to respond in writing to the OIG's findings.

7. Records may be disclosed to DOJ for litigation purposes associated with the representation of OIG and/or HUD before the courts.

* * * * *

HUD/OIG–5

SYSTEM NAME:

AutoAudit of the Office of Inspector General.

SYSTEM LOCATION:

Headquarters, District Offices, and Field Offices.

CATEGORIES OF INDIVIDUALS COVERED BY THE SYSTEM:

Individuals covered consist of: (1) HUD program participants and HUD employees who are associated with an activity that OIG is auditing or reviewing; (2) requesters of an OIG audit or other activity; and (3) persons and entities performing some other role of significance to the OIG's efforts, such as relatives or business associates of HUD program participants or employees, potential witnesses, or persons who represent legal entities that are connected to an OIG audit or other activity. The system also tracks information pertaining to OIG staff handling the audit or other activity, and may contain contact names for relevant staff in other agencies.

CATEGORIES OF RECORDS IN THE SYSTEM:

Records consist of materials compiled and/or generated in connection with audits and other activities performed by OIG staff. These materials include information regarding the planning, conduct and resolution of audits and reviews of HUD programs and participants in those programs, internal legal assistance requests, information requests, responses to such requests, reports of findings, etc.

AUTHORITY FOR MAINTENANCE OF THE SYSTEM:

The Inspector General Act of 1978 (5 U.S.C. App. 3) authorizes the Inspector General to conduct, supervise and coordinate audits and investigations relating to the programs and operations of HUD, to engage in other activities that promote economy and efficiency in the programs and operations of HUD, and to receive and investigate complaints concerning possible violations of law, rules, or regulations, or mismanagement, gross waste of funds, abuse of authority, or a substantial or specific danger to the public health or safety.

ROUTINE USES OF RECORDS MAINTAINED IN THE SYSTEM, INCLUDING CATEGORIES OF USERS AND THE PURPOSES OF SUCH USES:

In addition to those disclosures generally permitted under subsection (b) of the Privacy Act of 1974, 5 U.S.C. 552a(b), records may also be disclosed routinely to other users under the following circumstances:

1. In the event that records indicate a violation or potential violation of law, whether criminal, civil or regulatory in nature, the relevant records may be disclosed to the appropriate federal, State or local agency charged with the responsibility for investigating or prosecuting such violation or enforcing or implementing such statute, rule or regulation.

2. Records may be disclosed to a congressional office in response to an inquiry from that congressional office made at the request of the individual who is the subject of the records.

3. Records may be disclosed to HUD contractors, Public Housing Authorities or management agents of HUD-assisted housing projects, in order to assist such entities in taking action to recover money or property, where such recovery serves to promote the integrity of the programs or operations of HUD.

4. Records may be disclosed during the course of an administrative proceeding where HUD is a party to the litigation and the disclosure is relevant and reasonably necessary to adjudicate the matter.

5. Records may be disclosed to any source, either private or governmental, to the extent necessary to elicit information relevant to an OIG investigation.

6. Records may be disclosed to appropriate State boards of accountancy for possible administrative or disciplinary sanctions such as license revocation. These referrals will be made only after the independent auditor has been notified that the OIG is contemplating disclosure of its findings to an appropriate State board of accountancy, and the independent auditor has been provided with an opportunity to respond in writing to the OIG's findings.

7. Records may be disclosed to DOJ for litigation purposes associated with the representation of OIG and/or HUD before the courts.

POLICIES AND PRACTICES FOR STORING, RETRIEVING, ACCESSING, RETAINING, AND DISPOSING OF RECORDS IN THE SYSTEM: STORAGE:

Records are stored electronically in office automation equipment and manually in file jackets.

RETRIEVABILITY:

Records may be retrieved by computer search of the AutoAudit software, and/or by reference to a particular file number.

SAFEGUARDS:

Records are maintained in a secure computer network, and in locked file cabinets or in metal file cabinets in rooms with controlled access.

RETENTION AND DISPOSAL:

Retention and disposal is in accordance with (1) Records Disposition Schedule 3 (Administrative Records), Item Nos. 79–1 to 86, Appendix 3, HUD Handbook 2225.6 Rev 1; and (2) General Records Schedules, Appendix 22 (Inspector General Records), HUD Handbook 2228.2 Rev. 4.

SYSTEM MANAGERS AND ADDRESS:

Assistant Inspector General for Audit, Office of the Inspector General, Department of Housing and Urban Development, 451 Seventh Street, SW, Washington, DC 20410.

NOTIFICATION PROCEDURE:

The System Manager will accept inquiries from individuals seeking notification of whether the system contains records pertaining to them.

RECORD ACCESS PROCEDURES:

The procedures for requesting access to records appear in 24 CFR parts 16 and 2003.

CONTESTING RECORD PROCEDURES:

The procedures for requesting amendment or correction of records appear in 24 CFR part 16.

RECORD SOURCE CATEGORIES:

The OIG collects information from a wide variety of sources, including from HUD, other federal agencies, the General Accounting Office (''GAO''), law enforcement agencies, program participants, subject individuals, complainants, witnesses and other non-governmental sources.

EXEMPTIONS FROM CERTAIN PROVISIONS OF THE ACT:

None.

HUD/OIG–6

SYSTEM NAME:

AutoInvestigation of the Office of Inspector General.

SYSTEM LOCATION:

Headquarters, District Offices, and Field Offices.

CATEGORIES OF INDIVIDUALS COVERED BY THE SYSTEM:

Individuals covered consist of: (1) HUD program participants and HUD employees who are associated with an activity that OIG is investigating or evaluating; (2) requesters of an OIG investigative or other activity; and (3) persons and entities performing some other role of significance to the OIG's efforts, such as relatives or business associates of HUD program participants or employees, potential witnesses, or persons who represent legal entities that are connected to an OIG investigation or other activity. The system also tracks information pertaining to OIG staff handling the investigation or other activity, and may contain contact names for relevant staff in other agencies.

CATEGORIES OF RECORDS IN THE SYSTEM:

Records consist of investigatory material compiled and/or generated for law enforcement purposes in connection with investigations and other activities performed by OIG staff. These materials include information regarding the planning, conduct and prosecution of investigations of HUD program participants and employees, legal assistance requests, information requests, responses to such requests, reports of investigations, etc.

AUTHORITY FOR MAINTENANCE OF THE SYSTEM:

The Inspector General Act of 1978 authorizes the Inspector General to conduct, supervise and coordinate audits and investigations relating to the programs and operations of HUD, to engage in other activities that promote economy and efficiency in the programs and operations of HUD, and to receive and investigate complaints concerning possible violations of law, rules, or regulations, or mismanagement, gross waste of funds, abuse of authority, or a substantial or specific danger to the public health or safety.

ROUTINE USES OF RECORDS MAINTAINED IN THE SYSTEM, INCLUDING CATEGORIES OF USERS AND THE PURPOSES OF SUCH USES:

In addition to those disclosures generally permitted under subsection (b) of the Privacy Act of 1974, 5 U.S.C. 552a(b), records may also be disclosed routinely to other users under the following circumstances:

1. In the event that records indicate a violation or potential violation of law, whether criminal, civil or regulatory in nature, the relevant records may be disclosed to the appropriate federal, State or local agency charged with the responsibility for investigating or prosecuting such violation or enforcing or implementing such statute, rule or regulation.

2. Records may be disclosed to a congressional office in response to an inquiry from that congressional office made at the request of the individual who is the subject of the records.

3. Records may be disclosed to HUD contractors, Public Housing Authorities or management agents of HUD-assisted housing projects, in order to assist such entities in taking action to recover money or property, where such recovery serves to promote the integrity of the programs or operations of HUD.

4. Records may be disclosed during the course of an administrative proceeding where HUD is a party to the litigation and the disclosure is relevant and reasonably necessary to adjudicate the matter.

5. Records may be disclosed to any source, either private or governmental, to the extent necessary to elicit information relevant to an OIG investigation.

6. Records may be disclosed to appropriate State boards of accountancy for possible administrative or disciplinary sanctions such as license revocation. These referrals will be made only after the independent auditor has been notified that the OIG is contemplating disclosure of its findings to an appropriate State board of accountancy, and the independent auditor has been provided with an opportunity to respond in writing to the OIG's findings.

7. Records may be disclosed to DOJ for litigation purposes associated with the representation of OIG and/or HUD before the courts.

POLICIES AND PRACTICES FOR STORING, RETRIEVING, ACCESSING, RETAINING, AND DISPOSING OF RECORDS IN THE SYSTEM: STORAGE:

Records are stored electronically in office automation equipment and manually in file jackets.

RETRIEVABILITY:

Records may be retrieved by computer search of the AutoInvestigation software, and/or by reference to a particular file number.

SAFEGUARDS:

Records are maintained in a secure computer network, and in locked file cabinets or in metal file cabinets in rooms with controlled access.

RETENTION AND DISPOSAL:

Retention and disposal is in accordance with (1) Records Disposition Schedule 3 (Administrative Records), Item Nos. 79–1 to 86, Appendix 3, HUD Handbook 2225.6 Rev 1; and (2) General Records Schedules, Appendix 22 (Inspector General Records), HUD Handbook 2228.2 Rev. 4.

SYSTEM MANAGER(S) AND ADDRESS:

Assistant Inspector General for Investigation, Office of the Inspector General, Department of Housing and Urban Development, 451 Seventh Street, SW, Washington, DC 20410.

NOTIFICATION PROCEDURE:

Records are generally exempt from Privacy Act access. However, the System Manager will accept and give consideration to a request from an individual for notification of whether the system contains records pertaining to that individual.

RECORD ACCESS PROCEDURES:

Records are generally exempt from Privacy Act access. However, the System Manager will accept and give consideration to a request from an individual for access to records pertaining to that individual that are indexed and retrieved by reference to that individual's name and/or social security number. The procedures for requesting access to records appear in 24 CFR parts 16 and 2003.

CONTESTING RECORD PROCEDURES:

Records are generally exempt from Privacy Act amendment or correction. However, the System Manager will accept and give consideration to a request from an individual for amendment or correction of records pertaining to that individual that are indexed and retrieved by reference to that individual's name and/or social

security number. The procedures for requesting amendment or correction of records appear in 24 CFR part 16.

RECORD SOURCE CATEGORIES:

The OIG collects information from a wide variety of sources, including from HUD, other federal agencies, GAO, law enforcement agencies, program participants, subject individuals, complainants, witnesses and other non-governmental sources.

EXEMPTIONS FROM CERTAIN PROVISIONS OF THE ACT:

This system of records, to the extent that it consists of information compiled for the purpose of criminal investigations, has been exempted from the requirements of subsections (c)(3), (d)(1), (d)(2), (e)(1), (e)(2) and (e)(3) of the Privacy Act pursuant to 5 U.S.C. 552a(j)(2). In addition, this system of records, to the extent that it consists of other investigatory material compiled or generated for law enforcement purposes, has been exempted from the requirements of subsections (c)(3), (d)(1), (d)(2) and (e)(1) of the Privacy Act pursuant to 5 U.S.C. 552a(k)(2). Finally, this system of records, to the extent that it consists of investigatory material compiled or generated for the purpose of determining suitability, eligibility, or qualifications for Federal civilian employment or Federal contracts, the release of which would reveal the identity of a source who furnished information to the government under an express promise that the identity of the source would be held in confidence, has been exempted from the requirements of subsection (d)(1) of the Privacy Act pursuant to 5 U.S.C. 552a(k)(5). Rules have been promulgated in accordance with the requirements of 5 U.S.C. 553(b), (c) and (e) and have been published in the **Federal Register**.

Dated: April 25, 2000.

Susan Gaffney,

Inspector General.

[FR Doc. 00–12712 Filed 5–19–00; 8:45 am]

BILLING CODE 4210–01–P

Reader Aids

Federal Register

Vol. 65, No. 99

Monday, May 22, 2000

CUSTOMER SERVICE AND INFORMATION

Federal Register/Code of Federal Regulations

General Information, indexes and other finding aids	**202–523–5227**
Laws	**523–5227**
Presidential Documents	
Executive orders and proclamations	**523–5227**
The United States Government Manual	**523–5227**
Other Services	
Electronic and on-line services (voice)	**523–4534**
Privacy Act Compilation	**523–3187**
Public Laws Update Service (numbers, dates, etc.)	**523–6641**
TTY for the deaf-and-hard-of-hearing	**523–5229**

ELECTRONIC RESEARCH

World Wide Web

Full text of the daily Federal Register, CFR and other publications:

http://www.access.gpo.gov/nara

Federal Register information and research tools, including Public Inspection List, indexes, and links to GPO Access:

http://www.nara.gov/fedreg

E-mail

PENS (Public Law Electronic Notification Service) is an E-mail service for notification of recently enacted Public Laws. To subscribe, send E-mail to

listserv@www.gsa.gov

with the text message:

subscribe PUBLAWS-L your name

Use listserv@www.gsa.gov only to subscribe or unsubscribe to PENS. We cannot respond to specific inquiries.

Reference questions. Send questions and comments about the Federal Register system to:

info@fedreg.nara.gov

The Federal Register staff cannot interpret specific documents or regulations.

FEDERAL REGISTER PAGES AND DATE, MAY

25233–25434 1
25435–25622 2
25623–25828 3
25829–26116 4
26117–26480 5
26481–26730 8
26731–26940 9
29941–30334 10
30335–30520 11
30521–30828 12
30829–31072 15
31073–31244 16
31245–31426 17
31427–31782 18
31783–32006 19
32007–32046 22

CFR PARTS AFFECTED DURING MAY

At the end of each month, the Office of the Federal Register publishes separately a List of CFR Sections Affected (LSA), which lists parts and sections affected by documents published since the revision date of each title.

3 CFR

Proclamations:
7297 25821
7298 25823
7299 25825
7300 25827
7301 26113
7302 26117
7303 26481
7304 30335
7305 30827
7306 30829
7307 31071
7308 31783

Administrative Orders:
Notice of May 18, 2000 32005

Executive Orders:
January 19, 1917 (Revoked by PL07444).....30429
10977 (See EO 13154) 26479
11478 (Amended by EO 13152).....26115
12871 (Amended by EO 13156).....31785
12983 (See EO 13156) 31785
12985 (See EO 13154) 26479
13047 (See Notice of May 18, 2000).....32005
13149 (See Proc. 7308) 31783
13151 25619
13152 26115
13153 26475
13154 26479
13155 30521
13156 31785

5 CFR

351 25623
532 .....26119, 26120, 30821
630 26483
1201 25623

7 CFR

2 31245
47 29941
210 .....26904, 31371
220 26904
245 31427
301 .....26487, 30337, 31245
400 29941
945 25625
959 29942
981 25233
985 .....30341, 32007
989 30525
993 29945
1001 32010
1005 32010
1006 32010
1007 32010
1126 32010
1131 32010
1135 32010
1205 25236
1220 30832
1436 30345
1710 31246
1951 31248

Proposed Rules:
319 30365
360 31289
930 32044
958 30920
1220 30922
1240 30924
1710 31289

9 CFR

Proposed Rules:
77 25292
94 31290
590 26148

10 CFR

72 25241
420 25265
810 26278
Ch. XVIII 30833

Proposed Rules:
32 26148
50 .....30550, 31837
76 30018
Ch. 1 26772
431 30929

11 CFR

Proposed Rules:
104 .....25672, 31787
111 31787

12 CFR

361 31250
563 30527
563c 30527
563g 30527
614 26278
707 32010
716 31722
741 31722
790 25266
900 25267
917 25267
940 25267
1735 26731

Proposed Rules:
35 31962
207 31962
346 31962
533 31962
611 26776

900.....25676, 26518
917.....26518
926.....26518
940.....25676
944.....26518
950.....25676, 26518
952.....26518
955.....25676
956.....25676
961.....26518
980.....26518

13 CFR

121.....30836

14 CFR

25.....25435
39 .....25278, 25280, 25281, 25437, 25627, 25829, 25833, 26121, 26122, 26124, 26735, 26738, 30527, 30529, 30532, 30534, 30536, 30538, 30539, 30863, 30865, 30874, 31253, 31255, 31256, 31259, 32011, 32013, 32015,32016, 32018, 32021
71 .....25439, 25440, 26126, 26128, 30541, 30876, 30877, 30878, 30879, 32023
91.....31214, 31798
95.....26740
97 .....25838, 25842, 31427, 31798
121.....26128

Proposed Rules:

23.....30936
39 .....25694, 25696, 25892, 26149, 26152, 26781, 26783, 30019, 30021, 30023, 30025, 30028, 30031, 30033, 30553, 31109, 31113, 31291, 31837, 31839
71 .....25455, 25456, 25457, 26154, 26155, 26156, 26157, 26158, 26160, 26785, 26786, 26787, 26788, 30036, 30678, 31504, 32046, 32047

15 CFR

902.....31430

Proposed Rules:

301.....30555
922.....31634, 32048

16 CFR

305.....30351

Proposed Rules:

307.....26534
310.....26161

17 CFR

4.....25980
231.....25843
241.....25843
270.....25630
271.....25843

Proposed Rules:

240.....26534

19 CFR

19.....31260
24.....31261
101.....31262
122.....31263
159.....31261
174.....31261

20 CFR

404.....31800

Proposed Rules:

217.....30366
335.....26161
403.....30037

21 CFR

10.....25440
13.....25440
14.....25440
15.....25440
25.....30352
177.....26744
178.....26129, 26746
203.....25639
205.....25639
510.....25641
522.....26747
884.....31454
1301.....30541

Proposed Rules:

2.....26789
16.....26162
25.....30366
900.....26162

22 CFR

Proposed Rules:

706.....30369

23 CFR

450.....31803
668.....25441
771.....31803

24 CFR

84.....30498
583.....30822
905.....25445

Proposed Rules:

2003.....32240
3280.....31778
3282.....31778

25 CFR

Proposed Rules:

38.....26728

26 CFR

1 .....31073, 31078, 31805, 32152
31.....32152
48.....26488

Proposed Rules:

1 .....26542, 31115, 31118, 31841, 31853

27

275.....31079

Proposed Rules:

9.....31853

29 CFR

4022.....30880
4044.....30880

30 CFR

250.....25284
917.....29949
948.....26130

31 CFR

560.....25642

Proposed Rules:

10.....30375

32 CFR

Ch. XXIX.....30542
701.....31456
727.....26748
767.....31079

Proposed Rules:

701.....31505

33 CFR

100 .....25446, 25644, 31083, 31086
110 .....31083, 31086, 31091, 32023
117 .....25446, 25645, 25646, 29954, 30881, 31478
155.....31806
165 .....26489, 26750, 29954, 30883, 30884, 31086, 31091, 31479, 31813, 32023

Proposed Rules:

117.....30043, 30938
165 .....25458, 25980, 30376, 31293
167.....31856

34 CFR

674.....26136

Proposed Rules:

100.....26464
104.....26464
106.....26464
110.....26464
300.....30314

36 CFR

327.....26136

Proposed Rules:

1253.....26542
294.....30276, 30288

37 CFR

Proposed Rules:

201.....25894
202.....26162

39 CFR

20.....29955
111.....26750, 31815
952.....32026
913.....31265

Proposed Rules:

111 .....26792, 31118, 31506

40 CFR

9.....25982, 26491
22.....30885
52 .....29956, 29959, 30355, 30358, 31093, 31267, 31480, 31482, 31485, 31489, 32028, 32030, 32033
60.....32033
62.....25447
63.....26491
70.....32035
81.....29959
117.....30885
122.....30885
123.....30885
124.....30885
125.....30885
131.....31682
141.....25982
142.....25982
143.....25982
144.....30885
228.....31492
261.....31096, 32214
180 .....25647, 25652, 25655, 25660, 25857, 25860, 29963, 30543
228.....30545
270.....39885
271 .....26750, 26755, 29973, 29981
300.....30482, 31821
721.....30912

Proposed Rules:

51.....31858
52 .....26792, 30045, 30387, 31120, 31297, 31507, 32057
61.....26932
62.....25460
63.....26544
81.....30045, 31859
141.....25894, 30194
142.....25894, 30194
239.....26544
271.....26802, 30046
300 .....25292, 26803, 30489, 31864, 32058
403.....26550
430.....31120

41 CFR

101–43.....31218
102–36.....31218
Ch. 301.....31824

Proposed Rules:

60–1.....26088
60–2.....26088

42 CFR

414.....25664

Proposed Rules:

9.....25894
405.....31124
412.....26282
413.....26282
485.....26282
1001.....32060
1003.....25460

43 CFR

4.....25449

Proposed Rules:

2930.....31234
3800.....31234
8340.....31234
8370.....31234
8560.....31234
9260.....31234

44 CFR

64.....30545

Proposed Rules:

206.....31129

45 CFR

Proposed Rules:

1159.....31864

46 CFR

32.....31806
515.....26506
520.....26506
530.....26506
535.....26506

Proposed Rules
520 31130

47 CFR

1 ....29985, 31270
11 29985
22 25451
24 25452
54 ....25864, 26513
73 ....25450, 25453, 25669, 25865, 29985, 30547, 31100, 31101, 31498
74 29985
79 26757

Proposed Rules:
73 ....25463, 25697, 25865, 30046, 30047, 30558, 31130, 31131

48 CFR

219 30191
235 32040
241 32040
252 32041
1516 31498
1552 31498
1804 31101
1806 31101
1815 ....30012, 31101
1819 30012
1823 31101
1832 31101
1845 31101
1852 30012

Proposed Rules:
2 30311
11 30311
15 30311
23 30311
32 25614
42 30311
52 25614
209 32065
215 32066
223 32065
1503 25899
1552 25899
1803 32069
1852 32069
5433 31131
5452 31131

49 CFR

173 30914
178 30914
391 25285
552 30680
571 ....30680, 30915
585 30680
595 30680
619 31803
622 31803

Proposed Rules:
350 ....26166, 32070
359 25540
390 ....25540, 26166, 32070
394 ....25540, 26166, 32070
395 ....25540, 26166, 32070
398 ....25540, 26166, 32070
538 26805

50 CFR

17 ....25867, 26438, 26762
21 30918
32 30772
222 ....25670, 31500
223 ....25670, 31500
300 30014
600 ....25881, 31283, 31430
622 ....30362, 30547, 31827, 31831
648 ....25887, 30548, 31836, 32042
654 31831
660 ....25881, 26138, 31283
679 ....25290, 25671, 30549, 31103, 31104, 31105, 31107, 31288

Proposed Rules:
10 26664
13 26664
17 ....26664, 30048, 30941, 30951, 31298, 31870
23 26664
224 26167
622 ....31132, 31507
635 26876
660 31871
679 ....30559, 32070
697 25698

REMINDERS

The items in this list were editorially compiled as an aid to Federal Register users. Inclusion or exclusion from this list has no legal significance.

RULES GOING INTO EFFECT MAY 22, 2000

AGRICULTURE DEPARTMENT
Agricultural Marketing Service
Milk marketing orders:
New England et al.; published 5-22-00

AGRICULTURE DEPARTMENT
Animal and Plant Health Inspection Service
Plant-related quarantine, foreign:
Wood chips from Chile; published 4-20-00

COMMODITY FUTURES TRADING COMMISSION
Commodity Exchange Act:
Minimum financial requirements for futures commission merchants and introducting brokers; published 4-21-00

DEFENSE DEPARTMENT
Acquisition regulations:
Research, development, test, and evaluation budget category; definition; published 5-22-00
Utility privatization; published 5-22-00
Acquisitions:
Audit of Federal operations and programs; (OMB Circular A-73); published 5-22-00

ENERGY DEPARTMENT
Acquisition regulation:
Management and operating contracts; published 4-21-00
Acquisition regulations:
Mentor-Protege Program; published 4-21-00

ENVIRONMENTAL PROTECTION AGENCY
Air quality implementation plans; approval and promulgation; various States:
California; published 3-22-00
Iowa
Correction; published 5-22-00
Oregon; published 3-22-00

FEDERAL COMMUNICATIONS COMMISSION
Radio stations; table of assignments:
Texas; published 4-19-00

HEALTH AND HUMAN SERVICES DEPARTMENT
Food and Drug Administration
Public information; communications with state and foreign government officials; published 3-7-00

NATIONAL CREDIT UNION ADMINISTRATION
Credit unions:
Truth in Savings Act—
Statement disclosures; delivery in electronic form; published 4-20-00

OCCUPATIONAL SAFETY AND HEALTH REVIEW COMMISSION
Freedom of Information Act; implementation; published 4-25-00

POSTAL SERVICE
Practice and procedure:
False representation and lottery orders; proceedings; subpoenas and civil penalties; published 5-22-00

TRANSPORTATION DEPARTMENT
Federal Aviation Administration
Airworthiness directives:
Lockheed; published 4-17-00
MD Helicopters Inc.; published 5-5-00

TRANSPORTATION DEPARTMENT
National Highway Traffic Safety Administration
Anthropomorphic test devices:
Occupant crash protection—
Hybrid III test dummies; 3-year-old child dummy; design and performance specifications; published 3-22-00

COMMENTS DUE NEXT WEEK

AGRICULTURE DEPARTMENT
Animal and Plant Health Inspection Service
Exportation and importation of animals and animal products:
Horses from contagious equine meritis (CEM)-affected countries—
Spain; Spanish Pure Breed horses; comments due by 6-2-00; published 4-3-00

AGRICULTURE DEPARTMENT
Food Safety and Inspection Service
Egg products inspection; fee increase; comments due by 6-1-00; published 5-5-00

ARCHITECTURAL AND TRANSPORTATION BARRIERS COMPLIANCE BOARD
Electronic and information technology accessibility standards; comments due by 5-30-00; published 3-31-00

COMMERCE DEPARTMENT
National Oceanic and Atmospheric Administration
Fishery conservation and management:
Atlantic coastal fisheries cooperative management—
Atlantic Coast horseshoe crab; comments due by 6-2-00; published 5-3-00
Caribbean, Gulf, and South Atlantic fisheries—
Gulf of Mexico and South Atlantic coastal migratory pelagic resources; comments due by 5-31-00; published 5-16-00
Ocean and coastal resource management:
Coastal Zone Management Act Federal consistency regulations; comments due by 5-30-00; published 4-14-00

COMMERCE DEPARTMENT
Patent and Trademark Office
Patent cases:
Twenty-year patent term; patent term adjustment; implementation; comments due by 5-30-00; published 3-31-00

DEFENSE DEPARTMENT
Federal Acquisition Regulation (FAR):
Competitive negotiated acquisitions; discussion requirements; comments due by 6-2-00; published 4-3-00
Procurement integrity rewrite; comments due by 5-30-00; published 3-29-00

EDUCATION DEPARTMENT
Grants:
Direct grant programs; discretionary grants; application review process; comments due by 6-1-00; published 4-17-00

ENERGY DEPARTMENT
Energy Efficiency and Renewable Energy Office
Consumer products; energy conservation program:
Fluorescent lamp ballasts—
Energy conservation standards; comments due by 5-30-00; published 3-15-00

ENVIRONMENTAL PROTECTION AGENCY
Air programs; approval and promulgation; State plans for designated facilities and pollutants:
Oklahoma; comments due by 6-1-00; published 5-2-00
Clean Air Act:
Accidental release prevention requirements; risk management programs; distribution of off-site consequence analysis information; comments due by 5-30-00; published 4-27-00
Hazardous waste:
Project XL program; site-specific projects—
Minnesota; comments due by 5-30-00; published 5-8-00
Pesticides; tolerances in food, animal feeds, and raw agricultural commodities:
Fenthion, etc.; comments due by 5-30-00; published 3-31-00
Superfund program:
National oil and hazardous substances contingency plan—
National priorities list update; comments due by 5-31-00; published 5-1-00

FEDERAL COMMUNICATIONS COMMISSION
Radio stations; table of assignments:
Tennessee and Alabama; comments due by 5-30-00; published 4-19-00
Texas; comments due by 5-30-00; published 4-19-00
Various States; comments due by 5-30-00; published 4-19-00

FEDERAL ELECTION COMMISSION
Reports by political committees:
Election cycle reporting by authorized committees; comments due by 6-2-00; published 5-3-00

FEDERAL HOUSING FINANCE BOARD
Federal home loan bank system:
Acquired member assets, core mission activities, and investments and advances; comments due by 6-2-00; published 5-3-00

FEDERAL TRADE COMMISSION

Telemarketing sales rules; comments due by 5-30-00; published 5-5-00

GENERAL SERVICES ADMINISTRATION

Federal Acquisition Regulation (FAR):

Competitive negotiated acquisitions; discussion requirements; comments due by 6-2-00; published 4-3-00

Procurement integrity rewrite; comments due by 5-30-00; published 3-29-00

HOUSING AND URBAN DEVELOPMENT DEPARTMENT

Mortgage and loan insurance programs:

Title I Property Improvement and Manufactured Home Loan Insurance programs and Title I lender/Title II mortgagee approval requirements; comments due by 5-30-00; published 3-30-00

Public and Indian housing:

Public housing agency plans; poverty deconcentration and public housing integration (''One America''); comments due by 6-1-00; published 4-17-00

INTERIOR DEPARTMENT

Fish and Wildlife Service

Endangered and threatened species:

San Diego ambrosia; comments due by 5-30-00; published 3-30-00

Migratory bird hunting:

Seasons, limits, and shooting hours; establishment, etc.; comments due by 6-2-00; published 4-25-00

INTERIOR DEPARTMENT

Surface Mining Reclamation and Enforcement Office

Permanent program and abandoned mine land reclamation plan submissions:

Maryland; comments due by 5-30-00; published 4-28-00

JUSTICE DEPARTMENT

Immigration and Naturalization Service

Nationality:

Naturalization grants; revocation; comments due by 5-30-00; published 3-31-00

JUSTICE DEPARTMENT

Clean Air Act:

Accidental release prevention requirements; risk management programs; distribution of off-site consequence analysis information; comments due by 5-30-00; published 4-27-00

NATIONAL AERONAUTICS AND SPACE ADMINISTRATION

Federal Acquisition Regulation (FAR):

Competitive negotiated acquisitions; discussion requirements; comments due by 6-2-00; published 4-3-00

Procurement integrity rewrite; comments due by 5-30-00; published 3-29-00

TRANSPORTATION DEPARTMENT

Coast Guard

Ports and waterways safety:

OPSAIL 2000, New York Harbor, NY; safety zones; comments due by 5-31-00; published 5-17-00

Regattas and marine parades:

Eighth Coast Guard District annual marine events; comments due by 5-30-00; published 4-28-00

TRANSPORTATION DEPARTMENT

Federal Aviation Administration

Airworthiness directives:

Bell; comments due by 5-30-00; published 3-30-00

Bombardier; comments due by 5-30-00; published 4-28-00

Eurocopter France; comments due by 5-30-00; published 3-28-00

General Electric Co.; comments due by 6-2-00; published 4-3-00

McDonnell Douglas; comments due by 6-1-00; published 4-17-00

New Piper Aircraft, Inc.; comments due by 6-2-00; published 3-30-00

TREASURY DEPARTMENT

Customs Service

Organization and functions; field organizations, ports of entry, etc.:

Milwaukee and Racine, WI; ports consolidation; comments due by 5-30-00; published 3-28-00

TREASURY DEPARTMENT

Internal Revenue Service

Income taxes:

Tax shelter disclosure statements; cross-reference; comments due by 5-31-00; published 3-2-00

Tax-exempt organizations; taxation of income from corporate sponsorship; comments due by 5-30-00; published 3-1-00

Procedure and administration:

Corporate tax shelter registration; cross-reference; comments due by 5-31-00; published 3-2-00

Investors in potentially abusive tax shelters; requirements to maintain list; cross-reference; comments due by 5-31-00; published 3-2-00

VETERANS AFFAIRS DEPARTMENT

Vocational rehabilitation and education:

Veterans education—

Flight-training programs; information collection; comments due by 6-2-00; published 4-3-00

LIST OF PUBLIC LAWS

This is a continuing list of public bills from the current session of Congress which have become Federal laws. It may be used in conjunction with ''P L U S'' (Public Laws Update Service) on 202–523–6641. This list is also available online at http://www.nara.gov/fedreg.

The text of laws is not published in the **Federal Register** but may be ordered in ''slip law'' (individual pamphlet) form from the Superintendent of Documents, U.S. Government Printing Office, Washington, DC 20402 (phone, 202–512–1808). The text will also be made available on the Internet from GPO Access at http://www.access.gpo.gov/nara/index.html. Some laws may not yet be available.

H.R. 434/P.L. 106–200

Trade and Development Act of 2000 (May 18, 2000; 114 Stat. 251)

S. 1744/P.L. 106–201

To amend the Endangered Species Act of 1973 to provide that certain species conservation reports shall continue to be required to be submitted. (May 18, 2000; 114 Stat. 307)

S. 2323/P.L. 106–202

Worker Economic Opportunity Act (May 18, 2000; 114 Stat. 308)

Last List May 10, 2000

Public Laws Electronic Notification Service (PENS)

PENS is a free electronic mail notification service of newly enacted public laws. To subscribe, go to www.gsa.gov/archives/publaws-l.html or send E-mail to **listserv@www.gsa.gov** with the following text message:

SUBSCRIBE PUBLAWS-L Your Name.

Note: This service is strictly for E-mail notification of new laws. The text of laws is not available through this service. **PENS** cannot respond to specific inquiries sent to this address.

CFR CHECKLIST

This checklist, prepared by the Office of the Federal Register, is published weekly. It is arranged in the order of CFR titles, stock numbers, prices, and revision dates.

An asterisk (*) precedes each entry that has been issued since last week and which is now available for sale at the Government Printing Office.

A checklist of current CFR volumes comprising a complete CFR set, also appears in the latest issue of the LSA (List of CFR Sections Affected), which is revised monthly.

The CFR is available free on-line through the Government Printing Office's GPO Access Service at http://www.access.gpo.gov/nara/cfr/index.html. For information about GPO Access call the GPO User Support Team at 1-888-293-6498 (toll free) or 202-512-1530.

The annual rate for subscription to all revised paper volumes is $951.00 domestic, $237.75 additional for foreign mailing.

Mail orders to the Superintendent of Documents, Attn: New Orders, P.O. Box 371954, Pittsburgh, PA 15250–7954. All orders must be accompanied by remittance (check, money order, GPO Deposit Account, VISA, Master Card, or Discover). Charge orders may be telephoned to the GPO Order Desk, Monday through Friday, at **(202) 512–1800** from 8:00 a.m. to 4:00 p.m. eastern time, or FAX your charge orders to **(202) 512-2250**.

Title	Stock Number	Price	Revision Date
1, 2 (2 Reserved)	(869–038–00001–6)	5.00	[5] Jan. 1, 1999
3 (1997 Compilation and Parts 100 and 101)	(869–042–00002–1)	22.00	[1] Jan. 1, 2000
4	(869–042–00003–0)	8.50	Jan. 1, 2000
5 Parts:			
1–699	(869–042–00004–8)	43.00	Jan. 1, 2000
700–1199	(869–042–00005–6)	31.00	Jan. 1, 2000
1200–End, 6 (6 Reserved)	(869–042–00006–4)	48.00	Jan. 1, 2000
7 Parts:			
1–26	(869–042–00007–2)	28.00	Jan. 1, 2000
27–52	(869–042–00008–1)	35.00	Jan. 1, 2000
53–209	(869–042–00009–9)	22.00	Jan. 1, 2000
210–299	(869–042–00010–2)	54.00	Jan. 1, 2000
300–399	(869–042–00011–1)	29.00	Jan. 1, 2000
400–699	(869–042–00012–9)	41.00	Jan. 1, 2000
700–899	(869–042–00013–7)	37.00	Jan. 1, 2000
900–999	(869–042–00014–5)	46.00	Jan. 1, 2000
1000–1199	(869–042–00015–3)	18.00	Jan. 1, 2000
1200–1599	(869–042–00016–1)	44.00	Jan. 1, 2000
1600–1899	(869–042–00017–0)	61.00	Jan. 1, 2000
1900–1939	(869–042–00018–8)	21.00	Jan. 1, 2000
1940–1949	(869–042–00019–6)	37.00	Jan. 1, 2000
1950–1999	(869–042–00020–0)	38.00	Jan. 1, 2000
2000–End	(869–042–00021–8)	31.00	Jan. 1, 2000
8	(869–042–00022–6)	41.00	Jan. 1, 2000
9 Parts:			
1–199	(869–042–00023–4)	46.00	Jan. 1, 2000
200–End	(869–042–00024–2)	44.00	Jan. 1, 2000
10 Parts:			
1–50	(869–042–00025–1)	46.00	Jan. 1, 2000
51–199	(869–042–00026–9)	38.00	Jan. 1, 2000
200–499	(869–042–00027–7)	38.00	Jan. 1, 2000
500–End	(869–042–00028–5)	48.00	Jan. 1, 2000
11	(869–042–00029–3)	23.00	Jan. 1, 2000
12 Parts:			
1–199	(869–042–00030–7)	18.00	Jan. 1, 2000
200–219	(869–042–00031–5)	22.00	Jan. 1, 2000
220–299	(869–042–00032–3)	45.00	Jan. 1, 2000
300–499	(869–042–00033–1)	29.00	Jan. 1, 2000
500–599	(869–042–00034–0)	26.00	Jan. 1, 2000
600–End	(869–042–00035–8)	53.00	Jan. 1, 2000
13	(869–042–00036–6)	35.00	Jan. 1, 2000
14 Parts:			
1–59	(869–042–00037–4)	58.00	Jan. 1, 2000
60–139	(869–042–00038–2)	46.00	Jan. 1, 2000
140–199	(869–038–00039–3)	17.00	Jan. 1, 1999
200–1199	(869–042–00040–4)	29.00	Jan. 1, 2000
1200–End	(869–042–00041–2)	25.00	Jan. 1, 2000
15 Parts:			
0–299	(869–042–00042–1)	28.00	Jan. 1, 2000
300–799	(869–042–00043–9)	45.00	Jan. 1, 2000
800–End	(869–042–00044–7)	26.00	Jan. 1, 2000
16 Parts:			
0–999	(869–042–00045–5)	33.00	Jan. 1, 2000
1000–End	(869–042–00046–3)	43.00	Jan. 1, 2000
17 Parts:			
1–199	(869–038–00048–2)	29.00	Apr. 1, 1999
200–239	(869–038–00049–1)	34.00	Apr. 1, 1999
240–End	(869–038–00050–4)	44.00	Apr. 1, 1999
18 Parts:			
1–399	(869–038–00051–2)	48.00	Apr. 1, 1999
400–End	(869–038–00052–1)	14.00	Apr. 1, 1999
19 Parts:			
1–140	(869–038–00053–9)	37.00	Apr. 1, 1999
141–199	(869–038–00054–7)	36.00	Apr. 1, 1999
200–End	(869–038–00055–5)	18.00	Apr. 1, 1999
20 Parts:			
1–399	(869–038–00056–3)	30.00	Apr. 1, 1999
400–499	(869–038–00057–1)	51.00	Apr. 1, 1999
500–End	(869–038–00058–0)	44.00	[7] Apr. 1, 1999
21 Parts:			
1–99	(869–038–00059–8)	24.00	Apr. 1, 1999
100–169	(869–038–00060–1)	28.00	Apr. 1, 1999
170–199	(869–038–00061–0)	29.00	Apr. 1, 1999
200–299	(869–038–00062–8)	11.00	Apr. 1, 1999
300–499	(869–038–00063–6)	18.00	Apr. 1, 1999
500–599	(869–038–00064–4)	28.00	Apr. 1, 1999
600–799	(869–038–00065–2)	9.00	Apr. 1, 1999
800–1299	(869–038–00066–1)	35.00	Apr. 1, 1999
1300–End	(869–038–00067–9)	14.00	Apr. 1, 1999
22 Parts:			
1–299	(869–038–00068–7)	44.00	Apr. 1, 1999
300–End	(869–038–00069–5)	32.00	Apr. 1, 1999
23	(869–038–00070–9)	27.00	Apr. 1, 1999
24 Parts:			
0–199	(869–038–00071–7)	34.00	Apr. 1, 1999
200–499	(869–038–00072–5)	32.00	Apr. 1, 1999
500–699	(869–038–00073–3)	18.00	Apr. 1, 1999
700–1699	(869–038–00074–1)	40.00	Apr. 1, 1999
1700–End	(869–038–00075–0)	18.00	Apr. 1, 1999
25	(869–038–00076–8)	47.00	Apr. 1, 1999
26 Parts:			
§§ 1.0-1–1.60	(869–038–00077–6)	27.00	Apr. 1, 1999
§§ 1.61–1.169	(869–038–00078–4)	50.00	Apr. 1, 1999
§§ 1.170–1.300	(869–038–00079–2)	34.00	Apr. 1, 1999
§§ 1.301–1.400	(869–038–00080–6)	25.00	Apr. 1, 1999
§§ 1.401–1.440	(869–038–00081–4)	43.00	Apr. 1, 1999
§§ 1.441-1.500	(869-038-00082-2)	30.00	Apr. 1, 1999
§§ 1.501–1.640	(869–038–00083–1)	27.00	[7] Apr. 1, 1999
§§ 1.641–1.850	(869–038–00084–9)	35.00	Apr. 1, 1999
§§ 1.851–1.907	(869–038–00085–7)	40.00	Apr. 1, 1999
§§ 1.908–1.1000	(869–038–00086–5)	38.00	Apr. 1, 1999
§§ 1.1001–1.1400	(869–038–00087–3)	40.00	Apr. 1, 1999
§§ 1.1401–End	(869–038–00088–1)	55.00	Apr. 1, 1999
2–29	(869–038–00089–0)	39.00	Apr. 1, 1999
30–39	(869–038–00090–3)	28.00	Apr. 1, 1999
40–49	(869–038–00091–1)	17.00	Apr. 1, 1999
50–299	(869–042–00092–7)	23.00	Apr. 1, 2000
300–499	(869–038–00093–8)	37.00	Apr. 1, 1999
500–599	(869–038–00094–6)	11.00	Apr. 1, 1999
600–End	(869–038–00095–4)	11.00	Apr. 1, 1999
27 Parts:			
1–199	(869–038–00096–2)	53.00	Apr. 1, 1999

Title	Stock Number	Price	Revision Date
200–End	(869–038–00097–1)	17.00	Apr. 1, 1999
28 Parts:			
0-42	(869–038–00098–9)	39.00	July 1, 1999
43-end	(869-038-00099-7)	32.00	July 1, 1999
29 Parts:			
0–99	(869–038–00100–4)	28.00	July 1, 1999
100–499	(869–038–00101–2)	13.00	July 1, 1999
500–899	(869–038–00102–1)	40.00	[8] July 1, 1999
900–1899	(869–038–00103–9)	21.00	July 1, 1999
1900–1910 (§§ 1900 to 1910.999)	(869–038–00104–7)	46.00	July 1, 1999
1910 (§§ 1910.1000 to end)	(869–038–00105–5)	28.00	July 1, 1999
1911–1925	(869–038–00106–3)	18.00	July 1, 1999
1926	(869–038–00107–1)	30.00	July 1, 1999
1927–End	(869–038–00108–0)	43.00	July 1, 1999
30 Parts:			
1–199	(869–038–00109–8)	35.00	July 1, 1999
200–699	(869–038–00110–1)	30.00	July 1, 1999
700–End	(869–038–00111–0)	35.00	July 1, 1999
31 Parts:			
0–199	(869–038–00112–8)	21.00	July 1, 1999
200–End	(869–038–00113–6)	48.00	July 1, 1999
32 Parts:			
1–39, Vol. I		15.00	[2] July 1, 1984
1–39, Vol. II		19.00	[2] July 1, 1984
1–39, Vol. III		18.00	[2] July 1, 1984
1–190	(869–038–00114–4)	46.00	July 1, 1999
191–399	(869–038–00115–2)	55.00	July 1, 1999
400–629	(869–038–00116–1)	32.00	July 1, 1999
630–699	(869–038–00117–9)	23.00	July 1, 1999
700–799	(869–038–00118–7)	27.00	July 1, 1999
800–End	(869–038–00119–5)	27.00	July 1, 1999
33 Parts:			
1–124	(869–038–00120–9)	32.00	July 1, 1999
125–199	(869–038–00121–7)	41.00	July 1, 1999
200–End	(869–038–00122–5)	33.00	July 1, 1999
34 Parts:			
1–299	(869–038–00123–3)	28.00	July 1, 1999
300–399	(869–038–00124–1)	25.00	July 1, 1999
400–End	(869–038–00125–0)	46.00	July 1, 1999
35	(869–038–00126–8)	14.00	[8] July 1, 1999
36 Parts			
1–199	(869–038–00127–6)	21.00	July 1, 1999
200–299	(869–038–00128–4)	23.00	July 1, 1999
300–End	(869–038–00129–2)	38.00	July 1, 1999
37	(869–038–00130–6)	29.00	July 1, 1999
38 Parts:			
0–17	(869–038–00131–4)	37.00	July 1, 1999
18–End	(869–038–00132–2)	41.00	July 1, 1999
39	(869–038–00133–1)	24.00	July 1, 1999
40 Parts:			
1–49	(869–038–00134–9)	33.00	July 1, 1999
50–51	(869–038–00135–7)	25.00	July 1, 1999
52 (52.01–52.1018)	(869–038–00136–5)	33.00	July 1, 1999
52 (52.1019–End)	(869–038–00137–3)	37.00	July 1, 1999
53–59	(869–038–00138–1)	19.00	July 1, 1999
60	(869–038–00139–0)	59.00	July 1, 1999
61–62	(869–038–00140–3)	19.00	July 1, 1999
63 (63.1–63.1119)	(869–038–00141–1)	58.00	July 1, 1999
63 (63.1200–End)	(869–038–00142–0)	36.00	July 1, 1999
64–71	(869–038–00143–8)	11.00	July 1, 1999
72–80	(869–038–00144–6)	41.00	July 1, 1999
81–85	(869–038–00145–4)	33.00	July 1, 1999
86	(869–038–00146–2)	59.00	July 1, 1999
87-135	(869–038–00146–1)	53.00	July 1, 1999
136–149	(869–038–00148–9)	40.00	July 1, 1999
150–189	(869–038–00149–7)	35.00	July 1, 1999
190–259	(869–038–00150–1)	23.00	July 1, 1999
260–265	(869–038–00151–9)	32.00	July 1, 1999
266–299	(869–038–00152–7)	33.00	July 1, 1999
300–399	(869–038–00153–5)	26.00	July 1, 1999
400–424	(869–038–00154–3)	34.00	July 1, 1999
425–699	(869–038–00155–1)	44.00	July 1, 1999
700–789	(869–038–00156–0)	42.00	July 1, 1999
790–End	(869–038–00157–8)	23.00	July 1, 1999
41 Chapters:			
1, 1–1 to 1–10		13.00	[3] July 1, 1984
1, 1–11 to Appendix, 2 (2 Reserved)		13.00	[3] July 1, 1984
3–6		14.00	[3] July 1, 1984
7		6.00	[3] July 1, 1984
8		4.50	[3] July 1, 1984
9		13.00	[3] July 1, 1984
10–17		9.50	[3] July 1, 1984
18, Vol. I, Parts 1–5		13.00	[3] July 1, 1984
18, Vol. II, Parts 6–19		13.00	[3] July 1, 1984
18, Vol. III, Parts 20–52		13.00	[3] July 1, 1984
19–100		13.00	[3] July 1, 1984
1–100	(869–038–00158–6)	14.00	July 1, 1999
101	(869–038–00159–4)	39.00	July 1, 1999
102–200	(869–038–00160–8)	16.00	July 1, 1999
201–End	(869–038–00161–6)	15.00	July 1, 1999
42 Parts:			
1–399	(869–038–00162–4)	36.00	Oct. 1, 1999
400–429	(869–038–00163–2)	44.00	Oct. 1, 1999
430–End	(869–038–00164–1)	54.00	Oct. 1, 1999
43 Parts:			
1–999	(869–038–00165–9)	32.00	Oct. 1, 1999
1000–end	(869–038–00166–7)	47.00	Oct. 1, 1999
44	(869–038–00167–5)	28.00	Oct. 1, 1999
45 Parts:			
1–199	(869–038–00168–3)	33.00	Oct. 1, 1999
200–499	(869–038–00169–1)	16.00	Oct. 1, 1999
500–1199	(869–038–00170–5)	30.00	Oct. 1, 1999
1200–End	(869–038–00171–3)	40.00	Oct. 1, 1999
46 Parts:			
1–40	(869–038–00172–1)	27.00	Oct. 1, 1999
41–69	(869–038–00173–0)	23.00	Oct. 1, 1999
70–89	(869–038–00174–8)	8.00	Oct. 1, 1999
90–139	(869–038–00175–6)	26.00	Oct. 1, 1999
140–155	(869–038–00176–4)	15.00	Oct. 1, 1999
156–165	(869–038–00177–2)	21.00	Oct. 1, 1999
166–199	(869–038–00178–1)	27.00	Oct. 1, 1999
200–499	(869–038–00179–9)	23.00	Oct. 1, 1999
500–End	(869–038–00180–2)	15.00	Oct. 1, 1999
47 Parts:			
0–19	(869–038–00181–1)	39.00	Oct. 1, 1999
20–39	(869–038–00182–9)	26.00	Oct. 1, 1999
40–69	(869–038–00183–7)	26.00	Oct. 1, 1999
70–79	(869–038–00184–5)	39.00	Oct. 1, 1999
80–End	(869–038–00185–3)	40.00	Oct. 1, 1999
48 Chapters:			
1 (Parts 1–51)	(869–038–00186–1)	55.00	Oct. 1, 1999
1 (Parts 52–99)	(869–038–00187–0)	30.00	Oct. 1, 1999
2 (Parts 201–299)	(869–038–00188–8)	36.00	Oct. 1, 1999
3–6	(869–038–00189–6)	27.00	Oct. 1, 1999
7–14	(869–038–00190–0)	35.00	Oct. 1, 1999
15–28	(869–038–00191–8)	36.00	Oct. 1, 1999
29–End	(869–038–00192–6)	25.00	Oct. 1, 1999
49 Parts:			
1–99	(869–038–00193–4)	34.00	Oct. 1, 1999
100–185	(869–038–00194–2)	53.00	Oct. 1, 1999
186–199	(869–038–00195–1)	13.00	Oct. 1, 1999
200–399	(869–038–00196–9)	53.00	Oct. 1, 1999
400–999	(869–038–00197–7)	57.00	Oct. 1, 1999
1000–1199	(869–038–00198–5)	17.00	Oct. 1, 1999
1200–End	(869–038–00199–3)	14.00	Oct. 1, 1999
50 Parts:			
1–199	(869–038–00200–1)	43.00	Oct. 1, 1999
200–599	(869–038–00201–9)	22.00	Oct. 1, 1999

Title	Stock Number	Price	Revision Date
600–End	(869–038–00202–7)	37.00	Oct. 1, 1999
CFR Index and Findings Aids	(869–038–00047–4)	48.00	Jan. 1, 1999
Complete 1998 CFR set		951.00	1998
Microfiche CFR Edition:			
Subscription (mailed as issued)		247.00	1998
Individual copies		1.00	1998
Complete set (one-time mailing)		247.00	1997
Complete set (one-time mailing)		264.00	1996

[1] Because Title 3 is an annual compilation, this volume and all previous volumes should be retained as a permanent reference source.

[2] The July 1, 1985 edition of 32 CFR Parts 1–189 contains a note only for Parts 1–39 inclusive. For the full text of the Defense Acquisition Regulations in Parts 1–39, consult the three CFR volumes issued as of July 1, 1984, containing those parts.

[3] The July 1, 1985 edition of 41 CFR Chapters 1–100 contains a note only for Chapters 1 to 49 inclusive. For the full text of procurement regulations in Chapters 1 to 49, consult the eleven CFR volumes issued as of July 1, 1984 containing those chapters.

[5] No amendments to this volume were promulgated during the period January 1, 1998 through December 31, 1998. The CFR volume issued as of January 1, 1997 should be retained.

[7] No amendments to this volume were promulgated during the period April 1, 1998, through April 1, 1999. The CFR volume issued as of April 1, 1998, should be retained.

[8] No amendments to this volume were promulgated during the period July 1, 1998, through July 1, 1999. The CFR volume issued as of July 1, 1998, should be retained.