DEPARTMENT OF TRANSPORTATION

Federal Aviation Administration

14 CFR Part 39

[Docket No. 99–NM–161–AD; Amendment 39–11749; AD 2000–11–01]

RIN 2120–AA64

Airworthiness Directives; McDonnell Douglas Model DC–9–80 and MD–90–30 Series Airplanes, and Model MD–88 Airplanes

AGENCY: Federal Aviation Administration, DOT.

ACTION: Final rule.

SUMMARY: This amendment adopts a new airworthiness directive (AD), applicable to certain McDonnell Douglas Model DC–9–80 and MD–90–30 series airplanes, and Model MD–88 airplanes, that requires a determination be made of whether, and at what locations, metallized polyethyleneteraphthalate (MPET) insulation blankets are installed, and replacement of MPET insulation blankets with new insulation blankets. This amendment is prompted by reports of in-flight and ground fires on certain airplanes manufactured with insulation blankets covered with MPET, which may contribute to the spread of a fire when ignition occurs from small ignition sources such as electrical arcing or sparking. The actions specified by this AD are intended to ensure that insulation blankets constructed of MPET are removed from the fuselage. Such insulation blankets could propagate a small fire that is the result of an otherwise harmless electrical arc and could lead to a much larger fire.

DATES: Effective June 30, 2000.

The incorporation by reference of certain publications listed in the regulations is approved by the Director of the Federal Register as of June 30, 2000.

ADDRESSES: The service information referenced in this AD may be obtained from Boeing Commercial Aircraft Group, Long Beach Division, 3855 Lakewood Boulevard, Long Beach, California 90846, Attention: Technical Publications Business Administration, Dept. C1–L51 (2–60). This information may be examined at the Federal Aviation Administration (FAA), Transport Airplane Directorate, Rules Docket, 1601 Lind Avenue, SW., Renton, Washington; or at the FAA, Transport Airplane Directorate, Los Angeles Aircraft Certification Office, 3960 Paramount Boulevard, Lakewood, California; or at the Office of the Federal Register, 800 North Capitol Street, NW., suite 700, Washington, DC.

FOR FURTHER INFORMATION CONTACT: Robert Stacho, Aerospace Engineer, Systems and Equipment Branch, ANM–130L, FAA, Transport Airplane Directorate, Los Angeles Aircraft Certification Office, 3960 Paramount Boulevard, Lakewood, California 90712–4137; telephone (562) 627–5334; fax (562) 627–5210.

SUPPLEMENTARY INFORMATION: A proposal to amend part 39 of the Federal Aviation Regulations (14 CFR part 39) to include an airworthiness directive (AD) that is applicable to certain McDonnell Douglas Model DC–9–80 and MD–90–30 series airplanes, and Model MD–88 airplanes was published as a notice of proposed rulemaking (NPRM) in the **Federal Register** on August 12, 1999 (64 FR 43966). A second proposal that was identical to the NPRM, except that it affected additional airplanes, was published as a supplemental NPRM on November 17, 1999 (64 FR 62613). Those actions proposed to require that a determination be made of whether, and at what locations, metallized polyethyleneteraphthalate (MPET) insulation blankets are installed, and replacement of MPET insulation blankets with new insulation blankets.

Since the issuance of those NPRM's, the FAA has observed several prototyping exercises that involved the removal and replacement of MPET insulation blankets. The information obtained from these exercises assisted the FAA, operators, and manufacturer in understanding the technical details and impact of the requirements of this AD. Certain aspects of these prototype exercises will be discussed in the FAA's response to the comments received from the NPRM's.

Comments

Interested persons have been afforded an opportunity to participate in the making of this amendment. Due consideration has been given to the comments received.

The FAA has received comments in response to the NPRM's and supplemental NPRM's to Rules Docket No.'s. 99–NM–161–AD [applicable to certain McDonnell Douglas Model DC–9–81 (MD–81), DC–9–82 (MD–82), DC–9–83 (MD–83), DC–9–87 (MD–87) series airplanes; Model MD–90–30 series airplanes; and Model MD–88 airplanes] and 99–NM–162—AD (applicable to certain McDonnell Douglas Model DC–10–30 and –30F series airplanes, and Model MD–11 and –11F series airplanes). Because in most cases the issues raised by the commenters are generally relevant to both NPRM's, each final rule includes a discussion of all comments received.

Support for Proposed AD's

Several commenters support the intent of the proposed AD's; however, they request that some changes be made (discussed later).

Unsafe Condition

One commenter states that, because the MPET insulation blankets only propagate the flame and are not the source of the flame, the proposed AD's should address the unsafe condition (*i.e.,* source of the flame) rather than previously certified material (which met the flammability standard at one time) that is not creating the unsafe condition. The FAA does not concur. MPET insulation blankets, when ignited from a small ignition source, such as an electrical arc, can contribute to the spread of a fire. Such insulation blankets could propagate a small fire and lead to a much larger fire. Potential ignition sources exist in many areas of the affected airplanes. It is extremely difficult to determine where all potential ignition sources are. To provide the level of safety that is expected by the public for transport category airplanes, insulation blankets constructed of MPET must be removed. Therefore, the FAA finds that it has properly identified the unsafe condition (*i.e.,* insulation blankets constructed of MPET) addressed by these AD's.

The same commenter suggests that the subject blankets be handled as ''attrition replacements,'' as intended in the original McDonnell Douglas service bulletins. The commenter states that, since cabin interior flammability has been addressed already to a large extent by the FAA, MPET insulation blankets could be treated comparably, and thus, integrated into the overall interior materials requirements. (The FAA infers that the commenter is referring to the provisions in 14 CFR section 121.312 related to ''substantially complete replacement of the cabin interior.'') These requirements not only mandate stricter new standards, but allow older airplane interiors to remain in service until a balanced decision is made to fully reconfigure the cabin. After that decision is made, the entire flammability rule must be met on these older airplane interiors, as well. The commenter argues that insulation blankets could be included, since the proposed requirements are in the same category of ''new flammability standards'' and do not address the actual ignition source.

The FAA does not concur with the commenter's request to handle the subject blankets as ''attrition replacements.'' Attrition is appropriate for safety enhancements, not to correct identified unsafe conditions. There is a distinct difference between correcting an identified unsafe condition and enhancing safety. The intent of the interior material flammability enhancement was to provide occupants more time to evacuate an airplane before the cabin environment would become unsurvivable due to smoke and fire. The existing interior materials were not deemed unsafe, and therefore, could remain in service until the airlines needed to replacement them. With this action, as discussed above, the FAA finds that MPET-covered insulation material represents an unsafe condition that must be corrected. These AD's are a vehicle for ensuring that all affected operators perform the necessary actions that will address the identified unsafe condition. Therefore, these AD's are appropriate and warranted.

One commenter expresses concern that, because the requirements of the proposed AD's are extremely costly and cumbersome, resources are being taken away from more effective measures for improving aviation safety. The commenter states that there are safety groups (both with wide aviation business basis) that have targeted the most important/critical areas to be addressed. However, neither of these groups has fire on board as its top priority. The commenter interprets this to mean that the safety experts looking at statistical data would rather concentrate their efforts in other fields.

While there may be groups that concentrate their efforts in other areas, the FAA has identified an unsafe condition that needs to be corrected (as discussed above). The activity referred to is primarily aimed at identifying areas for improved safety, and focusing resources on the most effective candidates. This is distinctly different from correcting an identified unsafe condition. Therefore, these AD's are appropriate and warranted.

One commenter notes that in its experience most blankets are wet or soaking wet in a short time after coming out fairly dry (*i.e.,* after extensive drying) during a heavy check. The commenter asks how it should explain to its mechanics that they have to replace wet blankets because of a fire hazard.

The FAA infers from this comment that the wet blankets are a result of the atmospheric conditions in which the airplane is being operated or a result of moisture accumulation in the belly of the fuselage. As discussed above, the FAA has identified an unsafe condition on the affected airplanes that needs to be corrected. As addressed in the preambles of the NPRM's, the FAA has received reports of a number of in-flight and ground fires on in-service airplanes manufactured with insulation blankets covered with MPET, which can cause fire to spread from a small ignition source such as electrical arcing or sparking. The fact that insulation material itself may be wet may not prevent the MPET film material from propagating the fire to other combustible materials and causing a larger fire.

One commenter states that the wording ''otherwise harmless electrical arcs'' in the Summary section in the preamble of the proposed AD's is misleading and requests that this wording be removed. The commenter reports that there has never been any Maintenance Steering Group (MSG) 3 testing on airplane wiring, and that no one other than the FAA has even evaluated the problems associated with momentary metal-to-metal contact of wires. In addition, the FAA has never evaluated the effects of spurious signals emitted from degraded wires that can affect flight control surfaces, autopilots, rudders, etc.

The FAA does not concur with the commenter's request to revise the Summary section of the AD's. The term ''otherwise harmless arcs'' refers to an electrical arc that, on insulation films other than MPET, would not propagate a fire. In this case, the effect of the arc is negligible. In the case of MPET, an uncontrolled fire could develop. The FAA points out that these AD's do not address the aging wiring issues that can affect various systems. As discussed in the preamble of the NPRM's, the FAA is continuing to investigate various wiring problems on certain airplanes. In addition, the Aging System Task Force (ASTF) is continuing to investigate the need for specific aging wiring inspections and tests, as well as the potential effect on systems from degraded wiring. The actions required by this AD only address the identified unsafe condition (*i.e.,* insulation blankets constructed of MPET). The FAA may consider additional rulemaking actions to address any other identified unsafe condition.

Risk Assessment

Several commenters state that, in concert with the scheduled prototyping, a thorough risk assessment should be accomplished, particularly on the effects of replacing insulation blankets on the electrical (including wiring, cables, and installations), hydraulic, and mechanical systems. One commenter states that the risk assessment must be taken into account when mandating the scope and compliance of the proposed AD's. Several commenters state that a risk assessment is needed to determine whether areas exist where the risks associated with the replacement of MPET insulation blankets outweigh the benefits of replacing them. Risks inherent with disturbing airplane wiring and other permanently installed systems, particularly on the scale contemplated by the proposed AD's, are of primary concern. This and other related risks should be addressed using a structured method that considers the characteristics of MPET and alternative films, design and operation of overlying systems, susceptibility of those systems to damage during the replacement of insulation under proposed methods, and likely effects of any damage to those systems. One commenter states that the proposed AD's are not supported by such an analysis.

The FAA does not concur that a formal risk assessment is necessary. If accomplished properly, the replacement required by this AD will not disrupt wiring in such a way as to adversely affect safety. Generally, the prototype exercises demonstrated that the required replacement can be accomplished safely. In addition, Boeing is revising the referenced service bulletins to provide additional guidance on techniques to ensure safe replacements. The primary reason for providing an extended compliance time for this AD, as discussed under the next heading, is to ensure that operators have adequate time to accomplish the replacements properly. On the other hand, MPET insulation blankets have been shown to create an unsafe condition that must be corrected. Furthermore, the FAA will require any operator/modifier that develops its own installation data to include specific instructions to ensure that any displaced wires, systems, and installations are in an airworthy condition after accomplishment of the required replacement. The FAA will monitor these areas of concern during the accomplishment of the insulation blanket installations. Finally, if operators can show that removal and replacement of MPET insulation blankets in certain areas of an airplane will create a greater risk of an unsafe condition than leaving the MPET blankets in place, the FAA will consider requests that provide an acceptable level of safety under the provision of paragraph (e) of the final rule. Any request to leave MPET insulation

blankets installed in an airplane must provide justification that the identified unsafe condition has been minimized and that an acceptable level of safety is maintained.

One commenter states that the proposed AD's should be rewritten to limit the blanket replacement to areas of high risk, or conversely, retain existing blankets in areas with no wiring or with wiring deemed to pose little or no hazard.

The FAA does not concur. No technical justification, criteria, or data were submitted to support the commenter's request. Potential ignition sources exist throughout the airplane and insulation blankets constructed of MPET film material are located throughout the airplane. It is, therefore, extremely difficult to identify high risk areas and areas of little or no risk. The FAA finds that MPET insulation blankets in all areas of the affected airplanes must be addressed.

One commenter states that the requirements of the proposed AD's should be recast into phases so as to first respond across the worldwide fleet of affected airplanes to the areas of highest perceived risk. Thereafter, the areas of lesser perceived risk can be dealt with at a more appropriate pace. Targeting the highest perceived risk areas of the worldwide fleet of affected airplanes first would provide the greatest decrease in risk across the fleet most quickly. This approach also would make the best use of limited resources, lessen the substantial adverse impact to the traveling public of excessive fleet groundings, and somewhat reduce the substantial economic burden to the airlines.

The FAA does not concur with the commenter's statement that the requirements of the final rule should be recast into phases. As discussed above under the heading ''Unsafe Condition,'' potential ignition sources exist in many areas of the affected airplanes. It is difficult to identify high risk areas and areas of little or no risk. Therefore, the FAA finds that MPET insulation blankets in all areas of the affected airplanes must be replaced. With the change in the compliance time from 4 to 5 years in this AD, excessive fleet grounding should not take place. Adequate maintenance facilities are available to complete this action within the required time period.

Compliance Time for Proposed Replacement of MPET Insulation Blankets

Several commenters request that the compliance time for accomplishing the proposed replacement of the MPET insulation blankets be extended from the proposed 4 years to a range of 5 years to 8 years. The commenters state that such an extension will allow the replacement to be accomplished during a regularly scheduled ''D'' check or heavy maintenance visit, thereby eliminating any additional expenses that would be associated with special scheduling. The commenters express a concern about the availability of facilities and trained personnel, either domestically or offshore, to accomplish tasks of this magnitude.

One commenter states that maintenance planning can only be done effectively once all details of the work to be accomplished and all downtimes needed to perform the work are known in detail. Therefore, the compliance time should only start once all these details have been clarified.

One commenter states that the proposed AD's do not provide sufficient time for accomplishment of the prototyping effort. Wholesale removal or relocation of wiring not designed for removal in areas where access is difficult can lead to incidental damage even with the best maintenance practices. Given the problems of access, multiple blanket sections will now be required in many fuselage areas to replace a single original blanket. This will lead to new designs, templates, and part numbers. The commenter concludes that this cannot happen in an orderly fashion without completing a prototyping effort on at least one airplane.

The FAA concurs that an extension to the compliance time is warranted. The FAA's intent was that the replacement be conducted during a regularly scheduled maintenance visit for the majority of the affected fleet, when the airplanes would be located at a base where special equipment and trained personnel would be readily available, if necessary. Based on the information supplied by the commenters, the FAA now recognizes that 5 years corresponds more closely to an interval representative of most of the affected operators' normal maintenance schedules. The FAA finds that a 4-year compliance time would have a significant impact on scheduling and cost and might result in hurried accomplishment of the required replacement, which could result in potential damage to associated wiring. This decision is supported by experience from the prototype installations, which demonstrated that the required replacement procedures are complex in some areas, and that adequate time and facilities are necessary to ensure that they are completed safely and correctly. Paragraphs (a) and (c) of the final rule have been revised to reflect a compliance time of 5 years. The FAA does not consider that this extension will adversely affect safety.

One commenter supports the proposed 4-year compliance time for accomplishing the proposed replacement of the MPET insulation blankets. The commenter states that, while some operators feel it is not a practical time period, the proposed compliance time is reasonable and practical to retrofit all of the affected airplanes, utilizing airline and third party maintenance facilities. The commenter also states that it and other materials manufacturers are fully prepared and have the capacity to support this effort. Another commenter states that the proposed 4-year compliance time is a very generous allotment of time and would not want to see the proposed AD's delayed any further.

The commenters did not provide any data to support their position. For the reasons described previously, the FAA finds that a 5-year compliance time is reasonable and practical to retrofit all of the affected airplanes rather than the 4-year compliance time proposed by the original NPRM and supplemental NPRM.

Two commenters request that the compliance time for accomplishing the proposed replacement be shortened. One commenter states that the proposed compliance time of 4 years is too lengthy given the fire hazard introduced by MPET insulation blankets. The second commenter states that quicker action is necessary if the conditions of the wiring on affected airplanes are anything like what was discovered in the 737's emergency grounding issue of May 98, wires found damaged on the Space Shuttle Columbia, or numerous instances of wire insulation failure coming out of the Aging Transport Systems Rulemaking Advisory Committee (ATSRAC)/ASTF inspections (15 service bulletins upgraded to alert status on Model MD–11 series airplanes alone) or alert service bulletins on the 727's.

The FAA does not concur with the commenter's request to shorten the compliance time. As discussed previously, the FAA considered the safety implications, parts availability, and normal maintenance schedules for timely accomplishment of replacement of the MPET insulation blankets. In consideration of all of these factors, the FAA determined that the compliance time, as revised, represents an appropriate interval in which

replacement of the MPET insulation blankets can be accomplished in a timely manner within the fleet and still maintain an adequate level of safety. The FAA encourages operators to accomplish this modification as soon as possible. The commenter points out several incidents associated with airplane wiring. The FAA is addressing these issues as they are identified. The commenter is correct that these wiring incidents are the focus of ATSRAC and ASTF activity. However, these wiring issues are not the subject of this AD.

One commenter requests that the FAA consider a 4-year compliance time to accomplish the proposed replacement only in areas that are readily accessible (*i.e.,* areas where extraordinary means are not required to gain access). The MPET insulation blankets for certain defined areas of the cockpit and electronics bay(s) should not be replaced or should be replaced when those areas are made accessible. The commenter states that replacement of 98 percent of the insulation on the affected airplanes will provide an equivalent level of safety to those airplanes not affected by the proposed AD's. Considerable time will have to be added to the proposed compliance time to accommodate a complete replacement without forcing some airplanes to be grounded due to lack of maintenance capacity.

The FAA does not concur with the commenter's request to require a compliance time of 4 years only for replacement areas that are readily accessible. Although the prototype installations have shown that accomplishment of the required replacement in the cockpit and electronic compartment is physically challenging, potential ignition sources and the identified unsafe condition exist in areas that are not readily accessible. Therefore, the FAA finds that MPET insulation blankets in all areas of the affected airplanes must be replaced. However, as discussed previously, the FAA has extended the compliance time for the required replacement from 4 years to 5 years. While not intended to address the issue of inaccessible areas, the extension of the compliance time by one year should help alleviate the concern for grounding of airplanes due to lack of maintenance capacity.

Two commenters request that the FAA ensure that sufficient insulation material of appropriate quality is available. Supply shortages could create conditions in which the work needs to be performed under time pressure. One commenter notes that there is only one blanket covering material that is currently approved, and only one qualified test apparatus available for operators to perform American Society for Testing and Materials (ASTM) E648 tests on other products. The commenter also notes that the airplane manufacturer has stated that it has only one qualified supplier for manufactured blankets. The commenter is uncertain if the blanket manufacturer can meet replacement demands within the proposed 4-year compliance time. Furthermore, the commenter states that there are no dimensioned drawings available to 14 CFR part 121 operators who might plan to fabricate their own blankets. Templates must be plotted and obtained from the airplane manufacturer, which is a time consuming process.

Various insulation blanket material suppliers state that there is no cause for concern over the availability of the materials specified in the proposed AD's. Metallized Tedlar™ (*i.e.,* polyvinylfluoride), polyimide film, Tedlar™ and polyimide tapes, and fiberglass are abundant and are readily accessible to support all retrofit requirements.

The FAA has assessed the availability of materials required by this AD and has determined that required materials and manufacturing sources should be available for modification of the U.S. fleet within the 5-year compliance time. The FAA encourages operators to review their airplanes to assess their individual needs for materials and plan accordingly. The FAA anticipates that operators will accomplish the requirements of this AD at the earliest practicable maintenance opportunity to lessen the burden toward the end of the compliance time. In addition, the airplane manufacturer is preparing installation kits that can be utilized to accomplish the required replacement. Also, operators and modifiers have developed and are continuing to develop their own data (templates and drawings) to accomplish this required replacement. While this may be a time consuming process for some, it can be accomplished.

Inadequate Procedures and Information in Referenced Service Bulletins

Several commenters state that the replacement procedures and information specified in the referenced service bulletins (*i.e.,* McDonnell Douglas Service Bulletins MD–90–25–015, Revision 01, dated November 5, 1997; MD80–25–355, Revision 01, dated November 5, 1997; DC10–25–368, dated October 31, 1997; and MD11–25–200, Revision 01, dated March 20, 1998) are inadequate for reasons discussed below.

Several commenters state that the Accomplishment Instructions of the referenced service bulletins address the fabrication of insulation blankets but provide no instructions for installation. Detailed instructions for installation are essential to avoid risks during installation, particularly in crucial areas where wiring or other systems are densely concentrated. Damage to installed systems can result in latent failures of critical flight systems and generation of electrical ignition sources. The unprecedented scope of the work involved in moving and replacing wires and systems, and the fact that nothing similar has ever been attempted, introduce a new and unquantified amount of risk.

One commenter states that Boeing has acknowledged that instructions to remove and reinstall some equipment racks and related structures, which are necessary to accomplish the proposed replacement, do not exist in current maintenance documents and will need to be developed. Specific aspects of the proposed replacement are beyond the scope of any currently authorized maintenance procedures. The members of the Boeing Recovery and Modification (RAM) Team are the only personnel trained and authorized to disassemble and reassemble certain critical areas. Several commenters state that Boeing is planning to issue revised service bulletins around June 2000. One commenter states that Boeing should issue detailed service bulletins to cover the scope of the NPRM's and all related test criteria and requirements associated with insulation blanket replacement and removal/installation of associated equipment/components. One commenter states that the service bulletins should be revised to include the above information.

The FAA acknowledges that the instructions appear to be generic, without reference to specific locations in the airplane. However, it is still possible to complete the replacement required by this AD by developing the necessary installation data in conjunction with existing maintenance procedures. Since the issuance of the NPRM's, the manufacturer, in conjunction with operators, has completed prototype installations. Based on the results of the prototype, the manufacturer is developing revisions to the referenced service bulletins that will contain additional installation information and instructions. These revised service bulletins are scheduled for completion in June 2000. Any new or revised service bulletins will contain procedures to maintain/test the integrity

of the wiring after accomplishment of the replacement of any MPET insulation blanket. The FAA is planning to review and approve the revised service bulletins under the AMOC provision of paragraph (e) of the final rule.

In addition, the FAA is aware that certain operators and modifiers are developing their own installation data. The FAA may approve requests for an AMOC under the provisions of paragraph (e) of this AD if sufficient data are submitted to substantiate that such a design change would provide an acceptable level of safety.

The FAA does not concur with the commenter that the members of the Boeing RAM team are the only personnel that can address certain areas of the airplane. The FAA finds that many operators have the expertise to accomplish the required replacement. In addition, Boeing intends to include the necessary instructions in the revised service bulletins.

Several commenters state that the referenced service bulletins not only refer to materials tested in accordance with Standard Test Method ASTM E648 and approved by the FAA as a method of compliance with the requirements of the proposed AD, but also refer to materials that do not meet the new requirements. Moreover, other materials acceptable for compliance with the requirements of the proposed AD are not listed in the referenced service bulletins.

The FAA concurs that the referenced service bulletins refer to materials that do not meet the requirements of this AD. When the referenced service bulletins specified in the NPRM's were issued in 1997, the insulation blanket film material listed in those service bulletins were considered acceptable for installation. Since the issuance of those service bulletins, however, only one of the two metallized Tedlar™ covers specified in the referenced service bulletins has been demonstrated to be acceptable for compliance with the replacement requirements of paragraph (c) of this AD (as indicated in NOTE 4 of the AD) based on flammability testing using the criteria specified in the final rule. The revised service bulletins will only list material that has been approved by the FAA. Under the provisions of paragraph (c) of this AD, the FAA may approve other film material that is shown to meet the flammability test method specified in the final rule. Also, under the provisions of paragraph (e) of this AD, the FAA may approve requests for approval of an AMOC for insulation blankets other than those specified in the service bulletins referenced in the final rule that are shown to meet the flammability test method specified in the final rule and all other airworthiness regulations.

Several commenters state that, due to age, identification stamps on the MPET insulation blankets may be unreadable. The referenced service bulletins are missing instructions for determining whether such blankets are constructed of MPET.

Although the referenced service bulletins are missing instructions for determining whether insulation blankets are constructed of MPET, the FAA finds that such a determination can be made without such instructions. MPET insulation blankets are extremely shiny when compared to all other insulation blanket cover material, and can be readily recognized by trained maintenance personnel. It is also possible to use known MPET material as a comparison sample to assist in the identification should the markings not be readable. Paragraph (a) of the final rule has been revised to clarify the method of identifying MPET. MPET insulation blankets can be identified by the following markings: (1) DMS 2072, Type 2, Class 1, Grade A; (2) DMS 2072, Type 2, Class 1, or (3) DMS 1996, Type 1. The FAA has revised NOTE 2 of the final rule to clarify these markings.

Several commenters state that the referenced service bulletins specify the least effective method for the fabrication of new insulation blankets. Few operators are equipped or have the capability or capacity to manufacture their own blankets. Four sources of insulation blankets were evaluated in technical meetings with the manufacturer. Of these four sources, operators viewed blankets provided in kits by the manufacturer as the most efficient and practical. Such kits would facilitate the earliest completion date of a replacement program, would preserve the thermoacoustic characteristics of insulation systems and certificated configuration of affected airplanes, and can be supported according to the manufacturer. In addition, no dimensional blanket drawings and templates for making the blankets are available.

Although the method for fabrication of new insulation blankets specified in the referenced service bulletins may not be the most efficient method for the commenters, the FAA finds that it is possible to develop the necessary data to manufacture blankets in accordance with the instructions of the referenced service bulletins. The FAA is aware that Boeing is developing replacement kits. The information necessary to purchase these kits will be included in the revised service bulletins (as discussed previously). However, the revised service bulletins are not scheduled to be completed until June 2000. The FAA has decided not to delay this action in anticipation of the service bulletins, since the release date is not absolute and this action is necessary to address an identified unsafe condition. Therefore, the FAA may approve requests for an AMOC under the provisions of paragraph (e) of this AD once the revised bulletins are issued.

In addition, the FAA acknowledges that templates may not be available for operators to make new insulation blankets. However, the referenced service bulletins do describe procedures for removing the subject insulation blankets and using those blankets as templates for making new insulation blankets. While some operators may not be equipped or may decide not to manufacture the replacement blankets, there are adequate resources available in the industry to accomplish the manufacturing.

Several commenters state that the referenced service bulletins provide no labor estimates. One commenter states that it is not aware of any large transport category airplane that has been removed from service, has had its insulation replaced, and has been returned to service. This lack of experience and labor estimates from the manufacturer would impair the planning required of operators and their ability to provide accurate comments to the proposed AD's.

The FAA does not concur. The FAA acknowledges that the referenced service bulletins do not provide labor estimates. However, as indicated under the heading ''Regulatory Evaluation Summary'' in the preamble of the NPRM's and supplemental NPRM's, a Preliminary Cost Analysis and Initial Regulatory Flexibility Analysis to determine the regulatory impacts of the proposed AD's were included in the Rules Docket No.'s 99–NM–161–AD and 99–NM–162–AD. A summary of those analyses was contained under that same heading in the preamble of the NPRM's and supplemental NPRM's. In addition, the manufacturer, operators, and modifiers have developed estimates based on the prototype installations completed to date. (The FAA discusses the comments to the cost estimate of the proposed AD's in more detail, below, under the heading ''Regulatory Evaluation Summary.'')

In response to the original NPRM's, several commenters state that the manufacturer has indicated that the airplane effectivity in the referenced service bulletins is currently being re-

evaluated and may be revised substantially. This lack of accurate airplane effectivity also would impair the planning required of operators and their ability to provide accurate comments.

The FAA concurs that the effectivity listed in the service bulletins is not correct. As indicated under the heading ''Differences Between the Proposed AD and Service Bulletins'' in the preamble of the NPRM's, the FAA realizes that the effectivity listing of the referenced service bulletins not only includes airplanes manufactured with MPET insulation blankets, but airplanes equipped with other materials that are much more difficult to ignite than MPET. The FAA has determined that only airplanes manufactured with MPET insulation blankets are subject to the identified unsafe condition. Therefore, paragraph (a) of the AD's requires that a determination be made of whether, and at what locations, MPET insulation blankets are installed. In addition, the applicability specified in the final rules, based on the supplemental NPRM's, includes fewer airplanes than specified in the service bulletins. In addition, the applicability statement of the final rule, Rules Docket No. 99-NM–162-AD, has been revised to clarify the airplanes that are subject to the identified unsafe condition, which is discussed below, under the heading ''Revise Applicability of Proposed AD.''

Several commenters state that some accessibility issues have not been addressed. One commenter requests that the removal/replacement requirements be re-evaluated to exclude replacement insulation blankets in those ''inaccessible places'' of the airplanes. Three to four percent of the MPET insulation blankets are buried beneath structure and wiring in areas like the electrical and equipment (EE) bay and the flight deck and will require as much as 70 percent of the total man hours to replace.

The FAA does not concur that replacement of MPET insulation blankets should not be required in ''inaccessible'' areas. The areas identified by the commenters (*i.e.,* the EE bay and flight deck) are areas where potential ignition sources (*i.e.*, electrical arcing) are likely to exist and are, therefore, susceptible to the identified unsafe condition. During the prototype exercises and subsequent inspections of the EE bay and flight deck, the FAA learned that most Model DC–9–80 and MD–90–30 series airplanes do not have MPET insulation blankets in these areas. It is, however, the operator's responsibility, as required by paragraph (a) of this AD, to determine whether, and at what locations, MPET insulation blankets are installed in each airplane. Therefore, contrary to the commenters' assertion, the total labor costs associated with replacement of the MPET insulation blankets in the EE bay and flight deck will not be the most significant portion of the total cost of the AD.

One commenter requests that the FAA revise the proposed AD to incorporate specific references to industry guidance material on wire inspection and disturbance. As a minimum, such references should include Advisory Circular 25–16, ''Electrical Fault and Fire Protection and Prevention.''

The FAA does not concur. Operators and modifiers should be aware of the existing guidance and the revised service bulletin instructions (discussed above), which, based on the prototyping that has been accomplished, will specify wiring inspection information that may be needed.

One commenter requests that the FAA develop and require post-modification wiring inspections to verify the integrity of the wiring insulation. The FAA concurs that any damage done to wiring or other components in the course of the required replacement needs to be corrected. In fact, if maintenance personnel are aware of damage, whether or not caused by replacement of the MPET insulation blankets, they are obligated to document it and initiate appropriate corrective action. Operators are required by 14 CFR parts 91, 121, and 135 to maintain their airplanes in an airworthy condition after any alteration or repairs are made to the airplane. Also, based on the prototyping that has been accomplished, the revised service bulletins will provide any specific wire integrity inspection that may be needed. Therefore, no change to the final rule is necessary.

Coordination With Wiring AD's

Several commenters state that they understand that other NPRM's are in the development phases, which would require inspection of airplane wiring, and would deal with the same issues that have brought about the subject proposed AD's. Some of these commenters state that these NPRM's should not be developed, mandated, and undertaken separately, but rather should be part of a carefully thought out and coordinated process and program. A properly developed plan must consider that each time such disruption of airplane wires/systems takes place, there is an increasing opportunity for collateral damage to those wire/systems with unknown future safety implications. Such a plan also should recognize that the insulation proposed to be changed is not really the source of any fire problem and that proper rectification of the issues being considered might better lie in a carefully thought out and researched wiring AD. One commenter states that it would be efficient to combine the requirements of the proposed AD's with the wiring requirements that will be proposed soon. One commenter states that Boeing is developing several service bulletins dedicated to the inspection and maintenance of airplane wiring. However, these service bulletins will not be available in time to coincide with the insulation blanket replacement should the current NPRM's, with their proposed timing, become law.

The FAA does not concur that AD's addressing specific unsafe wiring conditions should necessarily provide for compliance times that are concurrent with this AD. In some cases, the corrective actions for those unsafe conditions are simple maintenance actions that can be accomplished quickly. It would be inappropriate to allow those unsafe conditions to continue during the extended compliance time allowed by this AD. The FAA does concur that any AD's addressing general wiring inspections for unsafe conditions would be best accomplished in conjunction with the replacement of MPET insulation blankets in affected areas. Such coordinated actions would certainly be most efficient for operators. The FAA does not concur with the commenters' request to combine the requirements of this AD with any proposed actions to address general wiring issues. Such action may delay correction of the unsafe condition of this AD by extending the compliance time further. The FAA will take into consideration the compliance time of this AD in any future action for general wiring inspection to minimize the duplication of aircraft downtime associated with accomplishing the actions of this AD.

Revise Applicability of Proposed AD

One commenter notes that paragraph (a) of the proposed AD states ''* * * determine whether, and at what locations, insulation blankets constructed of MPET are installed. This determination shall be made in a manner approved by the FAA.'' The commenter states that this wording is very unclear to operators and that the FAA should coordinate with Boeing to determine more precisely what the applicable airplanes are.

Based on the commenter's statement that ''the FAA should coordinate with Boeing to determine more precisely

what the applicable airplanes are,'' the FAA finds that clarification is necessary. After inspecting in-service airplanes, the FAA has determined that all affected airplanes may not have MPET insulation blankets throughout the fuselage. Some airplanes may have very little MPET insulation blankets installed and others may have 100 percent installed. The FAA also has determined that, based on the manufacturer's records alone, it is not possible to determine precisely the configuration of each individual airplane. Therefore, paragraph (a) of the final rule requires that operators determine whether, and at what locations, insulation blankets constructed of MPET are installed. If MPET insulation blankets are not installed, no further action is required by this AD.

The manufacturer states that it is continuing to verify the actual extent of MPET-covered insulation on airplanes delivered from the factory. In response to the original NPRM's, the manufacturer states that additional Model DC–9–87 (MD–87), DC–10, and MD–11 series airplanes, and KC–10A (military) airplanes need to be included in the applicability of the NPRM's, and at least some Model DC–9 series airplanes should be excluded. When that effort is complete, the manufacturer states that it will issue new service bulletin information. One commenter states that the applicability statement of NPRM, Rules Docket No. 99–NM–162–AD, is incorrect. The commenter states that the manufacturer has indicated that MPET insulation blankets were used on Model DC–10 series airplanes, fuselage numbers 359 through 381 inclusive, and 432 through 436 inclusive, and Model MD–11 series airplanes, fuselage numbers 447 through 602 inclusive. In addition, MPET insulation blankets were used on ducting installed in Model MD–11 series airplanes, fuselage numbers 603 through 632 inclusive.

The FAA acknowledges that the applicability statement of the original NPRM's was incorrect. Following the issuance of the NPRM's, the FAA identified additional airplanes that were subject to the identified unsafe condition and issued supplemental NPRM's to reopen the comment period to provide additional opportunity for public comment. The applicability statement of the supplemental NPRM's included the fuselage numbers of the airplanes the commenter referred to above.

One commenter states that the applicability statement of supplemental NPRM, Rules Docket No. 99–NM–162–AD, is incomplete. The commenter notes that it operates four Model DC–10–15 series airplanes, three of which fall within fuselage numbers 359 through 632 inclusive (*i.e.,* fuselage numbers 362, 365, and 374), which were manufactured between June 1981 and January 1982. The commenter requests that the applicability statement of the supplemental NPRM be revised to include Model DC–10–15 series airplanes. The FAA concurs. The applicability statement of the subject supplemental NPRM correctly references the specific manufacturer's fuselage numbers of all affected airplanes, including those fuselage numbers for Model DC–10–15 series airplanes. Therefore, the FAA finds that it is necessary to revise the applicability statement of the subject final rule to include all affected series of Model DC–10 airplanes, specifically Model DC–10–10F, DC–10–15, and DC–10–40 series airplanes.

One commenter requests that the applicability of NPRM, Rules Docket No. 99–NM–161–AD, be revised to ''[m]anufacturer's fuselage number 1011 through 2241 inclusive; certified in common carriage operations.'' The commenter states that private operators were not considered when studying the effects of the proposed AD's. Private operators who operate under 14 CFR 91.501 need to be separately considered when they are faced with rules that are directed at air carriers. Transport category ''Private Carriage'' operators, who operate under 14 CFR 91.501, are part of the general aviation population and do not offer service to the public or a segment of the public. General aviation operators' airplanes are not held (and are not expected to be held) accountable to the same regulation standards as ''Common Carriage'' operators. The commenter also states that significant differences in airplane utilization, interior, and operation make the likelihood of in-flight fire threat due to MPET insulation blankets on ''Private Carriage'' airplanes extremely remote. Therefore, the exclusion of ''Private Carriage'' airplanes from the applicability of this NPRM would not jeopardize public interest.

The FAA does not concur with the commenter's request to revise the applicability of the subject rule as stated. The identified unsafe condition and potential consequences addressed by this AD are not any different for airplanes utilized in private operation versus ones operated in common carriage.

One commenter states that the proposed AD's do not address affected airplanes outside the noted applicability that may have been retrofitted with MPET insulation blankets during service. This implies that the FAA's investigation has determined that small amounts of MPET on those airplanes do not pose an unsafe condition.

Regarding post-delivery installation of MPET, the FAA does consider that such insulation is unsafe. Most operators do not retain records identifying on what airplanes such insulation has been installed. Therefore, to address this unsafe condition, an AD would have to require that all operators inspect all airplanes of any type to identify the relatively small amount of such insulation that may have been installed during post-production maintenance. The FAA does not consider that such a requirement would be practical or cost effective. However, as with any other unsafe condition, when an operator becomes aware that MPET insulation blankets have been installed, the material should be removed to maintain the airplane in an airworthy condition.

Flammability Test Method Not Adequately Developed/Defined

Several commenters state that the proposed test method seems insufficiently developed to be considered the new standard flammability test. The commenters addressed several issues, including:

- The validity of the test method;
- Qualification of the test method;
- Details of the test procedures; and
- Materials and approval process.

Validity of Test Method

One commenter notes that it has built a test unit and conducted tests on it. The commenter has verified the results of the FAA Technical Center tests, but believes there are serious limitations on this test's utility for predicting how insulation coverings will burn when in place on an airplane. In addition, the commenter states that the mechanism by which films can pass the Radiant Panel Test is for the material to shrink away from the heat source. Other materials, such as polyimide film, pass the Radiant Panel Test by not igniting and shrinking away from the heat source. Two other commenters state that the best of Tedlar™ and Mylar™ (*i.e.,* 3 polyethyleneteraphthalate) films shrink away in the presence of flame and are no help at all in containing fire. The Tedlar™ material that passes the test shrinks away from the heat source before the ignition source can be applied to the surface of the test material. Thus, there is no material to ignite. The commenter states that the Radiant Panel Test may not replicate the condition on an airplane where blankets

are restrained and multiple layers are often part of the blanket construction.

The commenter further states that it is possible for polyethyleneteraphthalate (PET), MPET, or other plastics that are more combustible than Tedlar™ to pass ASTM E648, if treated to have desirable heat shrink characteristics. The only other requirement for insulation coverings is the 12-sec vertical burn, which is recognized as inadequate because MPET materials can pass it. The commenter notes that the proposed standard may leave the door open in the future for combustible materials to be installed on airplanes.

The FAA does not concur with the commenter's statement that films can pass the Radiant Panel Test by shrinking away from the heat source and are no help in containing a fire. The purpose of the test is to establish the flame spread characteristics of insulation blanket materials under realistic conditions. The results of this test have been correlated with full-scale testing, conducted by the FAA Technical Center, in which insulation was installed in fuselage sections in a representative fashion. Certain materials that shrink when exposed to heat have been shown to prevent propagation of a fire. In addition, for these same reasons, the FAA does not concur with the commenter that the FAA Technical Center tests have serious limitations. The FAA finds that the insulation material tested in accordance with the method specified in the AD will have much better flame spread characteristics than MPET, which was shown to comply with the current Bunsen Burner Test specified in the regulations, and subsequently, determined to have unsafe flame spread characteristics when ignited from a small ignition source.

One commenter states that the best situation is to have insulation covering film that does not burn in the Radiant Panel Test. The commenter contends that the test should screen out material that does not perform as well as polyimide film.

The FAA does not concur that the test method must screen out materials that do not perform as well as polyimide films. As discussed previously, materials, including polyimide films, that pass the Radiant Panel Test perform much better in full-scale testing than MPET insulation blankets that are the subject of this AD.

Qualification of the Test Method

One commenter expresses concern that the FAA has not yet published updated flammability standards that will allow for the development and testing of materials other than those cited in previous McDonnell Douglas service bulletins, which specify the replacement of MPET with two types of metallized Tedlar™. The commenter notes that the FAA has approved only one type of specified metallized Tedlar™ after it successfully passed an ASTM flame spread test. The commenter emphasizes that it is urgent that the FAA provide its own applicable test standard to facilitate the rapid replacement of MPET with other materials that will have superior fire resistant characteristics.

One commenter requests that the FAA revise the proposed AD's to ''more clearly require the FAA Radiant Panel Test, which was derived from ASTM E648,'' and to define the test before approving specific films. The commenter states that ASTM E648 is much different than the Radiant Panel Test developed by the FAA Technical Center. The Radiant Panel Test uses the same enclosure, a radiant panel, and the same basic concept as the ASTM E648 test. However, the Radiant Panel Test has had several modifications including a different heat flux, different ignition source, and a modified sample holder. The commenter notes that results of the Radiant Panel Test vary widely when test specifications are changed. Therefore, the specification of any film as passing the test prior to the completion of the test method is not warranted. It is possible for films that currently fail the existing test to pass when the test procedures or chamber is fully defined. Conversely, films that currently pass the test can fail.

One commenter states that industry experts should discuss the success criteria of ASTM E648 further. This commenter notes that these changes to the standard and success criteria have not been subject to round robin testing and outside peer review, so various aspects of their merit are questionable. One commenter suggests that round robin testing with clearly identifiable/achievable pass/fail criteria be performed by the industry to validate the repeatability of the test procedures prior to release of the proposed AD's. Validated criteria would produce an equivalent level of safety to material currently in production and in use in the fleet, which is deemed acceptable.

The FAA concurs with the commenters concerning the reference to ASTM E648 in the NPRM's and finds that clarification is necessary. The FAA has been developing for some time new flammability standards for insulation material. Research has been conducted on the various types of insulation material to determine their effectiveness on both flame spread and fuselage burnthrough. As a result, the FAA has developed a new flame spread test method. The flame spread test method specified in this AD is a modified version of the ASTM E648 flammability standard and test apparatus. Modifications to ASTM E648 test apparatus have been made to more closely reflect the fire conditions in an airplane environment. The FAA has prepared a document to reflect the flame spread test method to be used for testing of replacement insulation blankets for this AD. It is identified as ''Test Method to Determine the Flame Spread Characteristics of Thermal/Acoustic Insulation Material for Replacement of MPET.'' For the purposes of correcting the identified unsafe condition of this AD, the FAA finds that this flame spread test method is sufficiently developed.

The FAA also has developed a procedure for utilizing the FAA Technical Center flame spread test apparatus to qualify materials for this AD. The procedure for utilizing the test apparatus of the FAA Technical Center is identified as ''Ground Rules for Use of Technical Center Facility for Testing.''

The flame spread test method and procedure for using the FAA Technical Center test apparatus are both included in Appendix 1 of this AD.

As paragraph (c) of the NPRM's is currently worded, some commenters may misinterpret that the replacement insulation blankets must be constructed of materials tested in accordance with the original ASTM E648 flammability standard, rather than tested in accordance with a new flame spread test using an apparatus derived from ASTM E648 in accordance with a method approved by the FAA. Paragraph (c) of the final rules has been revised to clarify the flame spread test method for replacement insulation blankets. The Los Angeles Aircraft Certification Office (ACO) will work closely with other FAA ACO's and the FAA Technical Center to assist operators/modifiers in qualifying new materials for compliance with the requirements of this AD.

The FAA concurs that the method specified is not yet a ''standard.'' However, the method is sufficiently developed for this AD and, before adoption as a standard, will undergo the kind of industry qualification proposed by one commenter. The FAA partially concurs with the commenter's statement that round robin testing is necessary and that the success criteria of the flame spread test method should be discussed further. Prior to incorporation of a new flame spread test method into the

Airworthiness Standards for transport category airplanes (14 CFR part 25), the test method will be subject to round robin testing. In fact, this process is currently underway within the International Aircraft Materials Fire Test Working Group.

With respect to changes in the flame spread test method that may cause certain materials to go from acceptable to unacceptable, or vice versa, the FAA does not agree that this is an issue. Refinements to the test method will be made to improve the repeatability of the test, not to change the test results. Materials that are marginal will perform marginally regardless of the details of the method.

One commenter states that it understands that the FAA has plans to replace the standard gas-fired radiant panel with an electric panel, and that the flame ignition source is a single cone non-standard burner as opposed to the T-type burner method specified in ASTM E648. The commenter contends that differences between the FAA method and ASTM E648 are confusing to both testing labs wishing to provide services to FAA-regulated clients as well as suppliers of insulation who are unclear as to what the specification will be for the products they produce for the aerospace industry. The commenter states that ''specification of a non-standard test apparatus and conditions by the FAA end up creating a whole other set of devices which must be fabricated and maintained separately from their standard 'parent devices' removing the economic benefits which use of consensus developed public sector standards provide.''

The FAA does not concur for the reasons noted previously. In addition, since the apparatus specified is not used for any other aviation application, there is very little potential for confusion. The number of facilities currently equipped to conduct these tests is extremely small, which further diminishes any problems associated with differences in the test method.

One commenter states that, because of such a tremendously costly retrofit program, all further developments with regard to new testing methods must clearly avoid duplication or contradiction of actions as described in the proposed AD's.

The FAA has revised paragraph (c) of the final rule to clarify the flame spread test method to be used to qualify replacement insulation blankets. As previously discussed, this test method is adequately refined to qualify these materials for this AD.

Details of the Test Procedures

One commenter states that results of tests have shown that the thickness of the insulation has no impact on the performance of the film under test. Therefore, the commenter suggests that all samples be tested with two-inch thick insulation.

One commenter requests that the FAA develop specifications for environmental conditioning of samples since the absence of such requirements will significantly alter test results, in particular for ignition and flame spread sensitive materials such as faced insulation.

The commenter states that the proposed pass/fail criteria, including the minimum 2-inch burn length and 0 flame spread, are not easily measured or agreed upon. Several commenters state that clearer pass/fail criteria are needed. One commenter states that subjective assessment of test results in small scale fire testing is a constant, ongoing problem that should be avoided.

One commenter claims that the ''pilot'' burner arrangement called out in the FAA specification does not result in reproducible test results. Likewise, the ''pre-heat'' time between specimens and the time between sample insertion and flame application have not been defined. The commenter prefers a standard design and operation conditions and is unclear why the standard design has been modified.

The FAA does not agree that the current test method lacks reproducibility. Tests conducted at the FAA Technical Center and at other facilities indicate that the test is reproducible and repeatable. The FAA concurs with the commenter that a defined test protocol should be used when testing replacement material. The flame spread test method specified in the final rule does include the pass/fail criteria, environmental conditioning, and test specimen thickness. Issues such as the pilot burner arrangement will be the subject of further refinement before the test method is adopted as a regulatory standard, but are adequately defined for this AD.

One commenter requests that the test procedures include contaminated insulation blankets to simulate real world conditions. The commenter states that testing of pristine material may not provide sufficient assurance when within a few years the thermal blankets will be contaminated with solvents and other material. The FAA does not concur. While ''contamination'' might result in either detrimental or improved flammability performance, incorporation of generic ''contamination'' into a test requirement is not practical. Contamination is usually a localized phenomenon, and not spread uniformly throughout the airplane. Replacing the existing materials with materials that will not propagate a fire will confine a fire to the area of contamination and should prevent the fire from becoming a hazard. As with any material installed on an airplane, it is the operator's responsibility to ensure that the airplane remains in an airworthy condition.

The commenter further requests that the test procedures include ignition ''by these so-called, otherwise harmless electrical arcs.''' The commenter states that the likelihood of thermal blankets propagating a fire will typically start with an electrical arc. Therefore, the resistance to an arc-tracking Kapton™ (*i.e.,* polyimide) wire fire should be assessed. The commenter contends that this will give a clear indication of what the next flight crew might experience, rather than a Bunsen Burner or cotton swab test that doesn't relate to the real world conditions found on affected airplanes.

The FAA does not concur with the commenter's request to include electrical arcing ignition in the test procedures. Electrical arc tests were used to identify the unsafe characteristics of MPET in the course of research. The test method required by this AD is, in fact, a more severe measure of the materials' performance. There are materials that are not susceptible to ignition by electrical arcing that will not pass the test required by this AD. Therefore, the replacement of MPET insulation blankets in accordance with this AD will address the commenter's concern.

Approved Materials

Two commenters request that the FAA revise the proposed AD's to include an expanded list of approved films. Several commenters note that Kapton™ film installed 25 years ago on Model L–1011 series airplanes has proven to outperform Tedlar™ and Mylar™ films in FAA tests, which measure the materials' ability to hold back flames. Two commenters state that all FAA testing, including burnthrough testing, have shown polyimide films to be superior. In addition, FAA Administrator, Jane Garvey, specifically mentioned Kapton™ film as being a material that would be ''grandfathered in'' in an October 14, 1998, announcement.

Two commenters state that the proposed AD's appear to preclude the use of polyimide (Kapton™) insulation

covering film that has passed the new Radiant Panel Test.

The FAA does not concur with the commenters' request to revise NOTE 4 of the AD to include additional films. Except for the metallized Tedlar™ cover mentioned in NOTE 4 of the AD, currently, no other film has successfully passed the flammability testing in a manner approved by the Manager, Los Angeles ACO. However, the FAA is aware of various film materials that could be found to be acceptable replacement materials for MPET. Once these materials have successfully passed the flammability testing specified in the AD, they must be approved by the Manager, Los Angeles ACO. In addition to the flammability requirements, the material must be shown to meet all other applicable airworthiness requirements. The FAA Administrator did make an announcement in October 1998 that Kapton™ would be ''grandfathered,'' and that the FAA would not require that material to be replaced once is was installed. However, that announcement was made prior to the issuance of the NPRM for this final rule. This AD does NOT require Kapton™ to be replaced once it is installed; however, it does require testing and approval of any material, including Kapton™.

One commenter requests that the FAA revise NOTE 4 of the proposed AD's to read ''[t]he metallized Tedlar covers specified in the service bulletins must be tested to demonstrate compliance with the requirements of paragraph (c) of this AD.'' The commenter disagrees with the characterization that a particular cover material is considered acceptable with the requirements of paragraph (c) of the proposed AD's. The commenter states that the Thermal Acoustic Task Group, which was organized by the Fire (Safety) Test Branch of the FAA Technical Center to develop the new flammability requirements, did not begin to discuss the procedures for demonstrating compliance until a seminar was held on September 13 and 14, 1999. Because the release date of the NPRM's was before the seminar, no material could have been specified to be in compliance with the requirements of paragraph (c) of the NPRM's. The commenter states that, at the time of publication of the proposed AD's, compliance materials and methods had not yet been submitted under a Test Plan, conformity inspection of samples had not been completed, and properly witnessed testing had not taken place.

The FAA does not concur with the commenter's request to revise NOTE 4 of the AD as it suggests. The material that is listed in the service bulletins has been found acceptable by the FAA and was tested at the FAA Technical Center in a manner approved by the FAA, prior to the September seminar. The purpose of the seminar was not to develop test methods, but to introduce the method to the interested segment of the industry. Therefore, the timing of the seminar has no bearing on the approval status of the material. No change to the final rule is necessary.

Replacement Material Approval Process

One commenter notes that under the heading ''Differences Between the Proposed AD and Service Bulletins'' in the preamble of the NPRM's, it states ''* * * Only one of the two insulation blanket film materials specified in the service bulletins has successfully passed the testing of the ASTM flammability standard and has been found to be an acceptable replacement material for the MPET-covered insulation blankets. Other film material, such as certain polyimide and fluoropolymer composites, also have been successfully tested to ASTM E648 and could be found to be acceptable for compliance with the requirements of this proposed AD if presented to the FAA for approval. These materials are not listed in the service bulletins described previously.'' The commenter claims that the original equipment manufacturer (OEM) and certain operators are interpreting this statement as requiring a full Part Manufacturing Approval (PMA) and Supplemental Type Certificate (STC) approval process for blankets using films not in the referenced McDonnell Douglas service bulletins.

One commenter states that other new materials besides Kapton™ will become available in the near future for use as insulation coverings, and that the PMA/STC process is not designed for nor suited for purely materials testing. The commenter contends that using this process would add a great deal of unnecessary cost to the current approval process for new materials. Another commenter requests that the proposed AD be revised to include language describing a clear and abbreviated approval process for blankets utilizing new and less flammable materials.

The FAA does not concur with the commenter's request to include language describing the process for approval of replacement insulation blankets utilizing new and less flammable materials. The FAA approval process of replacing materials/installations is well established and known. Design approval can be obtained by an STC or PMA. It is the responsibility of the operators and modifiers to obtain such approvals for any proposed materials under paragraph (c) of the AD. The FAA may approve requests for AMOC's, such as alternative blanket installation, under the provisions of paragraph (e) of this AD if sufficient data are submitted to substantiate that such a design change would provide an acceptable level of safety.

The FAA has determined that an adequate supply of approved replacement materials will be available to comply with this AD in the time specified. Operators that choose to develop new or different materials must plan accordingly and obtain approval as previously stated. While the PMA or STC process may not seem to be cost effective for some operators, it is the proper approval method to assure all airworthiness standards are met.

Insulation Material on Other Aircraft

One commenter is not clear if the material used today on other Boeing airplanes is able to pass ASTM E648. The same commenter also states that the proposed AD's require full replacement of only MPET. The commenter is not clear what the rationale behind this decision is.

As discussed in the NPRM's, these AD's are intended to correct an unsafe condition by replacing MPET insulation blankets. MPET film differs from other films in use in that it is susceptible to propagation of a fire from a small ignition source. Other films, while not necessarily meeting the proposed test requirements, do not have this susceptibility. It is the susceptibility to small ignition sources that creates the unsafe condition. New standards for insulation materials in general may be similar to the requirements of this AD, but will be used to upgrade the level of safety, and not correct an unsafe condition.

Burnthrough

Several commenters request that the FAA revise the proposed AD's to make clear that airlines are permitted to install insulation that meets a burnthrough protection standard. Two commenters state that the proposed AD's appear to preclude the use of Curlon as a substitute for fiberglass to achieve burnthrough performance. One commenter states that Curlon material and many other materials recently developed could easily and economically provide double the level of protection of the current burnthrough time (*i.e.*, four minutes). Although the proposed AD's do not address the

burnthrough safety threat, the commenters want to take this opportunity to achieve this important safety advance when replacing the insulation. The commenters reemphasize that this would simply be reinforcing the October 1998 announcement that Curlon would be one of the materials ''grandfathered in,'' if operators proceeded to install it voluntarily.

Two commenters request that the FAA revise the proposed AD's to include requirements for burnthrough protection from fuel fires on the ground for all affected airplanes. The commenters state that replacement of flammable insulation is an opportunity to install burnthrough protection. One commenter states that this should be the time to push the industry, as was done with the heat release requirements for interior materials a few years ago. Materials were not even available to meet the new FAA requirements, but the industry ''stepped up to the plate and we now are all safer as a result of this proactive approach.''

The FAA does not concur with the commenters' requests to include burnthrough requirements in the AD. While burnthrough protection is important to the overall fire resistance of airplanes following an accident, the actions required by this AD are intended to correct a known unsafe condition—insulation blankets constructed of MPET. The FAA does not consider that the degree of burnthrough protection provided by currently installed insulation constitutes an unsafe condition. Therefore, it would be inappropriate to issue an AD to require improvement in burnthrough protection. The new replacement insulation blankets required by this AD meet the test method specified in the final rule, correct the identified unsafe condition, and provide the level of safety required by 14 CFR part 25. The FAA encourages the installation of materials that meet additional standards such as fuselage burnthrough protection.

Trade Names

One commenter opposes the use of trade names in both the preamble and regulatory text of the proposed AD's and considers such references to trade names highly prejudicial to Chemfab, the manufacturer of Chemfilm. The commenter states that there is no need for brand name product identification and that this connotes not only FAA approval of, but also preference for, the identified product brand. Once the official ''seal of approval'' has been granted through the rulemaking process, other market entrants face a significant barrier in gaining customer acceptance simply because the identified product has been ''officially'' sanctioned.

Because of the publication and circulation of the proposed AD's, two commenters request that the FAA revise the proposed AD's to identify the manufacturer(s) and trade names of insulation blanket covering films that have met FAA requirements specified in the proposed AD's.

The FAA does not concur with the commenters' request to reference other trade name products in the final rules or to eliminate all references. Tedlar™ and Mylar™ are common trade names and this is the clearest way for FAA to communicate with affected operators. Except for the one metallized Tedlar™ cover mentioned in NOTE 4 of the AD, currently, no other film has been approved by the Manager, Los Angeles ACO. In addition, the airplane manufacturer is planning to list materials, once they have been tested and approved by the FAA, in the revised service bulletins (discussed previously under the heading ''Inadequate Procedures and Information in Referenced Service Bulletin''). Furthermore, the FAA finds that trade names such as of Mylar™, Kapton™, and Tedlar™ are well known and are accepted terminology in industry. The reference of these trade names in the AD's are not, in any way, an FAA endorsement of those products. Therefore, no change to the final rule is necessary.

Wiring

One commenter requests that flammability requirements for the sources of ignition (*i.e.,* the wiring) for thermal blanket fires be stricter than the requirements for thermal blankets themselves. The commenter states that the 60-degree flame test—the only test required by the FAA for the wiring on commercial airplanes—should be replaced immediately with the vertical flame test as a minimum requirement, and that every type of wire insulation in all airplanes should have to meet it.

The FAA does not concur. The current flammability standard for wiring has not been determined to be inadequate. The actions required by this AD are intended to address an identified unsafe condition, which is that MPET-covered insulation blankets can contribute to the spread of a fire when ignition occurs from a small ignition source such as electrical arcing or sparking. As noted previously, the FAA has a major program underway to address issues related to airplane wiring and problems are being addressed as they are identified.

Corrosion Protection

One commenter states that for Model MD–11 series airplanes to be afforded the same corrosion protection offered by the OEM installation, any fabricated blankets must meet the original type design. The existing Corrosion Prevention and Control Program (CPCP) requirements are based on the performance of the insulation system. Any compromise or alteration will necessitate changes to the CPCP. Many insulation blankets cannot be installed as they originally were due to installation of overlying structure. Therefore, deviations to the type design will have to be approved by the OEM and FAA in the form of an AMOC. The burden of these approvals will stress the resources of the OEM and FAA over the duration of the compliance period.

The FAA does not concur. The FAA is aware of the potential effects of changing insulation material has on the corrosion protection of the affected airplanes. The airplane manufacturer intends to take this into account so that no change to the CPCP is required. Any operator or modifier also will be required, under paragraph (e) of this AD, to address any ramifications to the CPCP in any request for an AMOC.

Add New Inspection

One commenter requests that, if it is determined that an insulation blanket is not constructed of MPET during the action required by paragraph (a) of the proposed AD's, a visual inspection be conducted to detect fire damage, electrical arcing, discoloration, or other physical damage. The commenter also requests a visual inspection for possible ignition sources during routine maintenance on airplanes not affected by the proposed AD's.

The FAA does not concur with the commenter's request to revise paragraph (a) of the final rule to include a visual inspection for possible ignition sources. If any evidence of fire damage is found during the subject inspection, operators are already required to investigate and determine the source of the problem. This is no different from any other maintenance action that is performed by the operators. It is not necessary to include any additional requirements in this AD to accomplish this action.

Alternative Method of Compliance

One commenter states that it has developed a system whereby the existing bagged insulation can be removed from the airplane without the necessity of interfering with wiring

harnesses or other unrelated systems. The commenter claims that its system would reduce the installation time of the proposed AD's, reduce the cost of compliance, and reduce the remote chances of creating future related AD's caused by the method of compliance. Another commenter states that it also has developed an insulation system that works around existing equipment and thus eliminates the need to remove much of the equipment that is not normally removed during heavy maintenance checks. The commenter claims that its system is lighter in weight than the OEM insulation system and will result in fuel savings.

One commenter agrees that the flammability/flame spread performance of the MPET-covered insulation blankets should be improved, but questions proposed AD's that would require blanket replacement. The commenter states that this approach may not be the only possible method of addressing the issue. This concept is especially important considering the potential negative consequences of required airplane disassembly to accomplish the blanket replacement. The commenter suggests that there may be other options such as spray coatings that offer virtually equivalent performance with little negative impact.

From these comments, the FAA infers that the commenters are requesting that the final rules be revised to include the commenter's systems for replacing or modifying the MPET insulation blankets. The FAA does not concur. The commenters did not provide any technical details for the FAA to make a finding. Paragraph (e) of the final rule contains provisions for requesting approval of an AMOC to address these types of unique circumstances.

One commenter requests that the FAA require installation of additional fire resistant material(s) between the insulation blankets and any adjacent wires, wire bundles, or other potential ignition sources instead of removing and replacing MPET insulation blankets. The commenter also requests that the FAA consider this approach on either a full or partial basis. Another commenter believes that fire resistant material(s) in such a location would better promote the overall safety of the affected airplanes.

The FAA acknowledges that this suggestion may be a possible acceptable alternative to removing the existing insulation blankets. However, no change to the final rule is necessary. Under paragraph (e) of the AD, operators may apply for the approval of an AMOC or adjustment of the compliance time that provides an acceptable level of safety.

Communication

One commenter requests that the FAA have a public meeting regarding the proposed AD's. The commenter states that, because many vendors are trying to develop materials that meet the new FAA requirements, and the market price of these materials seems to vary drastically at present, it just has insufficient information on new materials.

The FAA does not concur that a public meeting regarding the proposed AD's is necessary. Through the FAA Technical Center, the FAA has provided a forum to develop flammability standards for insulation materials. In addition, the FAA is aware of a number of meetings hosted by the airplane manufacturer to provide information to operators affected by the requirements of this AD. The FAA is sensitive of the public's concern with the fire safety issues associated with this AD and is aware of the effects this AD will have on operators. The FAA has determined that an unsafe condition exists, and that the actions required by this AD are necessary in order to ensure the continued safety of the affected fleet.

Extend Comment Period of NPRM's, Delay Issuance of Final Rules, and Withdraw NPRM's

For the reasons described above, several commenters request that the FAA do one or more of the following: (1) Extend the public comment period for the NPRM's and supplemental NPRM's; (2) delay issuance of the final rules; or (3) withdraw the NPRM's and combine them with the draft burnthrough NPRM. (The FAA infers that the commenters are referring to a draft NPRM relating to insulation blanket flammability. The FAA announced its intention to develop new flammability standards for thermal/acoustic insulation in October 1998. This announcement included mention of improved burnthrough protection.)

One commenter states that it is not uncommon, in the case of an AD relating to issues not as complex as the proposed AD's, for the FAA to allow 90 days or more to comment. The 45-day comment period of the proposed AD's does not allow for proper understanding and evaluation on which to develop reasonable comments.

The FAA does not concur with the commenters' request to extend the comment period. On November 10, 1999, the FAA issued supplemental NPRM's to reopen the comment period for an additional 25 days to provide opportunity for public comment (the comment period for the NPRM's was 45 days and closed on September 27, 1999). The FAA finds that the public has had a reasonable opportunity to comment on the substance of the AD's. The FAA does not concur with the commenter's statement that it is not uncommon for the FAA to allow 90 days or more for the public to comment on proposed AD's. The standard comment period is 45 days for NPRM's and 25 days for supplemental NPRM's in which the FAA has responsibility as the State of Design of the affected airplanes. A 90-day comment period would be uncommon.

As discussed above in ''Inadequate Procedures in Referenced Service Bulletins,'' the FAA also finds that it is possible to accomplish the requirements of this AD. Since the issuance of the NPRM's, the airplane manufacturer, in conjunction with operators, has completed the prototype installations. Based on the results of these installations, the airplane manufacturer is developing revisions to the service bulletins referenced in the AD's to include detailed instructions for accomplishment of the required replacement. These revised service bulletins are scheduled for completion in June 2000. Any new or revised service bulletins, among other items, will contain procedures to maintain/test the integrity of the wiring after accomplishment of the replacement of any MPET insulation blanket. These revised service bulletins will be approved as an AMOC for the requirements of this AD.

The FAA does not concur with the commenter's request to delay issuance of the final rules. These revised service bulletins are scheduled for completion in June 2000. The FAA has determined that, while physically challenging, the actions required by the AD can be accomplished within the 5-year compliance time, and that the actions are warranted to address an identified unsafe condition.

In support of its request to withdraw the NPRM's, one commenter contends that other rulemaking in development by the FAA may eventually affect the airplanes covered by this AD, thereby requiring two extensive modifications.

The FAA does not concur with the commenter's request to withdraw the NPRM's and combine them with the draft burnthrough NPRM. Any other regulatory action to raise the level of safety would have to be justified and subject to public comment. The FAA does not anticipate requiring airplanes to be modified twice as a result of future actions. The actions required by this AD are intended to correct an identified unsafe condition by removing MPET insulation blankets from airplanes

affected by these AD's. These actions are not intended to provide a general upgrade to the current level of safety specified in the airworthiness regulations. Therefore, the actions required by these AD's are warranted.

One commenter disagrees that prototyping efforts are necessary to determine the feasibility of the requirements of the proposed AD's and disagrees that issuance of the proposed AD's should be delayed. The commenter states that it is in the process of prototyping the insulation retrofit on several affected airplanes. The commenter expects the prototyping to be completed in 6 weeks (the commenter's letter was received by the FAA on September 27, 1999). The FAA concurs with the commenter that issuance of the final rules should not be delayed. As discussed previously, the FAA has participated in the prototyping specified by the commenter, and that prototyping effort has been completed.

Cost Estimates

Several commenters state that the FAA ''grossly'' underestimated the costs associated with accomplishing the requirements of the proposed AD and provided their cost estimates. Two other commenters provided cost estimates that were less than those provided in the NPRM's.

The FAA concurs that the cost estimates specified in the NPRM's were underestimated. The FAA based its cost estimates on information that was available at the time the NPRM's were issued. Since the issuance of the NPRM's, the FAA has carefully reviewed the information and cost estimates provided by the commenters and the information obtained during the prototype exercises. The FAA has learned that most Model DC–9–80 and MD–90–30 series airplanes do not have MPET insulation blankets installed in the nose section of the airplane. Also, a number of airplanes do not have MPET insulation blankets in the fuselage, but have MPET insulation blankets only on the air conditioning ducting. The airplane manufacturer will be making this information available when the service bulletins are revised, as mentioned above. In light of these findings, the FAA has revised the cost estimates for the final rules, which is summarized below under the heading ''Regulatory Evaluation Summary.''

Several commenters request that the FAA reevaluate the cost estimates once the prototype exercises are completed. As discussed previously, the FAA has revised the cost estimate of the final rules based on the prototype exercises.

Several commenters state that the FAA should consider costs associated with accomplishing the requirements of both proposed AD's (*i.e.,* Rules Dockets 99–NM–161–AD and 99–NM–162–AD) , under Title II of the Unfunded Mandates Reform Act of 1995.

The FAA did consider the total costs associated with accomplishing the requirements of both NPRM's for all affected airplanes under the heading ''Regulatory Evaluation Summary'' in the preamble of the NPRM's. A copy of the Preliminary Cost Analysis and Initial Regulatory Flexibility Analysis also were included in each docket. These documents, along with the final documents, are available for the public to review.

Conclusion

After careful review of the available data, including the comments noted above, the FAA has determined that air safety and the public interest require the adoption of the rule with the changes previously described. The FAA has determined that these changes will neither increase the economic burden on any operator nor increase the scope of the AD.

Regulatory Evaluation Summary

To determine the regulatory impact of this AD, the FAA conducted a Final Cost Analysis and a Final Regulatory Flexibility Analysis. In addition, the FAA assessed the impact of this AD on international trade and determined whether it must satisfy the requirements of the Unfunded Mandate Reform Act. While a summary of these findings is reported in this preamble, a more detailed discussion is included in the Rules Docket for this AD.

Since the publication of the NPRM, the FAA has observed several prototype exercises that involved the removal and replacement of MPET insulation blankets. Information gained through these exercises has contributed to greater understanding by the FAA, operators, and manufacturer of the technical details and impacts of the requirements of this AD.

The FAA took account of the results of the prototype exercises, comments to the NPRM's, and other additional information, and then adjusted its estimates of the costs attributable to this AD. Further, recent information indicates that the count of affected airplanes is 621 Model DC–9–80 series airplanes and 21 Model MD–90–30 series airplanes. Specifics of these adjustments are discussed below.

Several commenters indicate that the FAA underestimated the costs of the new insulation material, labor hours necessary for retrofitting, and lost passenger revenue from retrofitting downtime. With respect to labor and material costs, the FAA contacted the major material suppliers (one of which was the airplane manufacturer) and three carriers that together operate 75% of the affected fleet. Information and estimates from these sources support increases both in the level of detail and in the levels of labor and material costs for this adjusted estimate. Therefore, the labor cost calculation methods used in this AD differ from those used in the NPRM's. The FAA has developed the labor estimates for this AD using information supplied by the manufacturer and affected operators to arrive at average values specific to the requirements of this AD. The FAA considers these values conservative.

The commenters express disagreement with the asset-based approach the FAA used in the Preliminary Cost Analysis to estimate the cost of the loss of service of the airplanes during their retrofits. The commenters suggest that the estimate be made on the basis of loss of per seat revenue. There are two reasons why the FAA uses the asset-based approach. First, the FAA takes an industry-wide perspective in which a passenger who cannot be seated on an airplane that is out of service for compliance with this AD can be seated on an airplane that is in service. On an industry-wide basis, no revenue will be lost. Second, the contribution of a seat's revenue to corporate net income is subject to variations in accounting, financial, marketing, and operational practice.

The FAA's asset-based approach centers on the financial ratio, overall corporate rate of return, which was reported by the operators and published by the Department of Transportation. This ratio is applied to the average value of the assets lost to the service of the operators and is adjusted for the average period of time for which they are lost because of compliance. This approach assumes that operators maximize the value of their firms by optimizing the mix and quantity of their assets.

Even though the FAA uses essentially the same ''lost-revenue'' method as that in the supplemental NPRM's, the FAA nevertheless did increase its estimates of lost revenue by increasing the number of days out of service, reducing the operating base year from 365 days to approximately 320 days, and raising the rate of return (9% is an average of domestic passenger and cargo operators' profit rates as estimated by the Department of Transportation's Bureau of Transportation Statistics). All of these adjustments raise the value of the

variables applied to the airplane asset values (*i.e.,* $16.2 million per DC–9–80/MD–90–30).

The FAA has identified 621 Model DC–9–80 and 21 MD–90–30 series airplanes that will be subject to retrofitting. Four of these airplanes have MPET insulation installed throughout. Thirty-five of these airplanes have MPET insulation installed only around air conditioning ducts. Six hundred and three of these airplanes have MPET installed throughout except for the nose. These patterns of installation strongly affect the retrofitting costs for each individual airplane. The FAA final costs estimate reflects the cost of each airplane when averaged for the total DC–9–80/MD–90–30 affected fleet.

The foregoing results in the following adjustments to the calculations presented in the supplemental NPRM.

For Model DC–9–80 series airplanes, the preliminary estimates for labor, material, and lost service per airplane were as follows: labor, $335,988; material, $27,021; and lost service, $20,416. The corresponding MD–90–30 estimates were as follows: $385,560; $31,008; and $37,052.

The components of this adjusted estimate per airplane, for both Model DC–9–80 and MD–9–30 series airplanes, are as follows: combined labor and material, $479,921 (averaged as $628,184 for 4 airplanes, $73,156 for 35 airplanes, and $502,547 for 603 airplanes, as discussed above); and lost service, $65,998. Overall, the adjusted estimates compare to the original estimates as follows:

Original	Adjusted
625 DC–9–80, each $383,000.	621 MD80s, each $545,919.
22 MD–90–30, each $454,000.	21 MD90s, each $545,919.

The adjusted estimate of the total costs of this AD over the five-year retrofit period for all 644 affected narrow-body airplanes is approximately $351.6 million or $288.6 million discounted to present value. The total impact for all affected airplanes (i.e., Model DC–9–80, MD–90–30 , MD–11, and DC–10 series airplanes) is 449.3 million or 368.4 million discounted to present value over the five year compliance time.

With respect to effects on small entities, the Regulatory Flexibility Act (RFA) of 1980 establishes ''as a principle of regulatory issuance'' that agencies shall endeavor, consistent with the objective of the rule and of applicable statutes, to fit regulatory and informational requirements to the sale of the business, organizations, and governmental jurisdictions subject to regulation. To achieve that principle, the RFA requires agencies to solicit and consider flexible regulatory proposals and to explain the rationale for their actions. The RFA covers a wide range of small entities, including small businesses, not-for-profit organizations, and small governmental jurisdictions. Agencies must perform a review to determine whether a proposed or final rule will have a significant economic impact on a substantial number of small entities. If the determination is that it will, the Agency must prepare a regulatory flexibility analysis as described in the RFA. However, if an agency determines that a proposed or final rule is not expected to have a significant economic impact on a substantial number of small entities, section 605(b) of the RFA provides that the head of the agency may so certify and a regulatory flexibility analysis is not required. The certification must include a statement providing the factual basis for this determination, and the reasoning should be clear.

Of the operators affected by this AD, all but three are air carriers, none of which is a small business. In two of the remaining cases, Model DC–9–80 series airplanes are owned for personal use. One Model DC–9–80 series airplane is operated for non-carrier business purposes by a large corporation. Although the small business size criterion is met in the cases of the two Model DC–9–80 series airplanes that are owned for personal use, two such entities do not constitute a ''substantial number'' within the meaning of the RFA. Thus, pursuant to the Regulatory Flexibility Act, 5 U.S. C. 605(b), the FAA certifies that this AD will not have a significant economic impact on a substantial number of small entities.

The provisions of this AD will have little or no impact on trade for U.S. firms doing business in foreign countries and foreign firms doing business in the United States.

Finally, Title II of the Unfunded Mandates Reform Act of 1995 (the Act), enacted as Public Law 104–4 on March 22, 1995, requires each Federal agency, to the extent permitted by law, to prepare a written assessment of the effects of any Federal mandate in a proposed or final agency rule that may result in the expenditure by State, local, and tribal governments, in the aggregate, or by the private sector, of $100 million or more (adjusted annually for inflation) in any one year. Section 204(a) of the Act, 2 U.S.C. 1534, requires the Federal agency to develop an effective process to permit timely input by elected officers (or their designees) of State, local, and tribal governments on a proposed ''significant intergovernmental mandate.'' A ''significant intergovernmental mandate'' under the Act is any provision in a Federal agency regulation that would impose an enforceable duty upon State, local, and tribal governments, in the aggregate, of $100 million (adjusted annually for inflation) in any one year. Section 203 of the Act, 2 U.S.C. 1533, provides that before establishing any regulatory requirements that might significantly or uniquely affect small governments, the agency shall have developed a plan that, among other things, provides for notice to potentially affected small governments, if any, and for a meaningful and timely opportunity to provide input in the development of regulatory proposals.

This AD does not contain any Federal intergovernmental or private sector mandate. Therefore, the requirements of Title II of the Unfunded Mandates Reform Act of 1995 do not apply.

List of Subjects in 14 CFR Part 39

Air transportation, Aircraft, Aviation safety, Incorporation by reference, Safety.

Adoption of the Amendment

Accordingly, pursuant to the authority delegated to me by the Administrator, the Federal Aviation Administration amends part 39 of the Federal Aviation Regulations (14 CFR part 39) as follows:

PART 39—AIRWORTHINESS DIRECTIVES

1. The authority citation for part 39 continues to read as follows:

Authority: 49 U.S.C. 106(g), 40113, 44701.

§ 39.13 [Amended]

2. Section 39.13 is amended by adding the following new airworthiness directive:

2000–11–01 McDonnell Douglas: Amendment 39–11749. Docket 99–NM–161–AD.

Applicability: Model DC–9–81 (MD–81), DC–9–82 (MD–82), DC–9–83 (MD–83), DC–9–87 (MD–87) series airplanes; Model MD–90–30 series airplanes; and Model MD–88 airplanes; manufacturer's fuselage numbers 995 through 2243 inclusive; certificated in any category.

Note 1: This AD applies to each airplane identified in the preceding applicability provision, regardless of whether it has been modified, altered, or repaired in the area subject to the requirements of this AD. For airplanes that have been modified, altered, or repaired so that the performance of the requirements of this AD is affected, the

owner/operator must request approval for an alternative method of compliance in accordance with paragraph (e) of this AD. The request should include an assessment of this AD; and, if the unsafe condition has not been eliminated, the request should include specific proposed actions to address it.

Compliance: Required as indicated, unless accomplished previously.

To ensure that insulation blankets constructed of metallized polyethyleneteraphthalate (MPET) are removed from the fuselage, accomplish the following:

Inspection

(a) Within 5 years after the effective date of this AD, determine whether, and at what locations, insulation blankets constructed of MPET, are installed. When markings are not visible, the determination shall be made by using known MPET material as a comparison sample to assist in the identification.

Note 2: Insulation blankets that are marked with ''DMS 2072, Type 2, Class 1, Grade A;'' ''DMS 2072, Type 2, Class 1;'' or ''DMS 1996, Type 1;'' are constructed of MPET.

Corrective Actions

(b) For insulation blankets that are determined not to be constructed of MPET, no further action is required by this AD.

(c) For insulation blankets that are determined to be constructed of MPET, within 5 years after the effective date of this AD, replace the MPET insulation blankets with new insulation blankets that have been approved by the Manager, Los Angeles Aircraft Certification Office (ACO), FAA, Transport Airplane Directorate. The blankets shall be replaced in accordance with the Accomplishment Instructions of McDonnell Douglas Service Bulletin MD–90–25–015, Revision 01, dated November 5, 1997 (for Model MD–90–30 series airplanes); or McDonnell Douglas Service Bulletin MD80–25–355, Revision 01, dated November 5, 1997 (for Model DC–9–80 series airplanes and Model MD–88 airplanes); as applicable. The replacement insulation blankets must be constructed of materials tested in accordance with Appendix 1 of this AD, or in accordance with a method approved by the Manager, Los Angeles ACO.

Note 3: Although this paragraph allows up to 5 years for the required replacement, the FAA anticipates that operators will comply at the earliest practicable maintenance opportunity.

Note 4: Only one of the two metallized Tedlar™ covers specified in the service bulletins has been shown to have successfully passed the testing of the American Society for Testing and Materials (ASTM) flammability standard and is considered acceptable for compliance with the requirements of paragraph (c) of this AD.

Spares

(d) As of the effective date of this AD, no person shall install an MPET insulation blanket on any airplane.

Alternative Methods of Compliance

(e) An alternative method of compliance or adjustment of the compliance time that provides an acceptable level of safety may be used if approved by the Manager, Los Angeles ACO. Operators shall submit their requests through an appropriate FAA PMI, who may add comments and then send it to the Manager, Los Angeles ACO.

Note 5: Information concerning the existence of approved alternative methods of compliance with this AD, if any, may be obtained from the Los Angeles ACO.

Special Flight Permits

(f) Special flight permits may be issued in accordance with sections 21.197 and 21.199 of the Federal Aviation Regulations (14 CFR 21.197 and 21.199) to operate the airplane to a location where the requirements of this AD can be accomplished.

Incorporation by Reference

(g) The blankets shall be replaced in accordance with the Accomplishment Instructions of McDonnell Douglas Service Bulletin MD–90–25–015, Revision 01, dated November 5, 1997; or McDonnell Douglas Service Bulletin MD80–25–355, Revision 01, dated November 5, 1997; as applicable. This incorporation by reference was approved by the Director of the Federal Register in accordance with 5 U.S.C. 552(a) and 1 CFR part 51. Copies may be obtained from Boeing Commercial Aircraft Group, Long Beach Division, 3855 Lakewood Boulevard, Long Beach, California 90846, Attention: Technical Publications Business Administration, Dept. C1–L51 (2–60). Copies may be inspected at the FAA, Transport Airplane Directorate, 1601 Lind Avenue, SW., Renton, Washington; or at the FAA, Transport Airplane Directorate, Los Angeles Aircraft Certification Office, 3960 Paramount Boulevard, Lakewood, California; or at the Office of the **Federal Register**, 800 North Capitol Street, NW., suite 700, Washington, DC.

(h) This amendment becomes effective on June 30, 2000.

Appendix 1.—Test for Materials Replacing Metallized PET Thermal Acoustical Insulation, Film February 16, 2000

This test method is used to evaluate the flammability and flame propagation characteristics of thermal/acoustic insulation when exposed to both a radiant heat source and a flame.

(a) *Definitions.*

(1) *Thermal/Acoustic Insulation.* Thermal/acoustic insulation is defined as a material or system of materials used to provide thermal and/or acoustic protection. Examples include a film-covering material encapsulating a core material such as fiberglass or other batting material and foams.

(2) *Radiant Heat Source.* The radiant heat source is an air/gas fueled radiant heat energy panel.

(b) *Test Apparatus* (as schematically shown in figure 1).

(1) *Radiant Panel Test Chamber.* Tests will be conducted in the radiant panel test chamber as used in ASTM—Designation: E 648. It is suggested that the test chamber be located under an exhaust hood to facilitate clearing the chamber of smoke after each test. The radiant panel test chamber shall consist of an enclosure 55 inches (1400 mm) long by 19½ inches (500 mm) deep by 28 inches (710 mm) above the test specimen. The sides, ends, and top shall be insulated with a fibrous ceramic insulation such as Kaowool™ board. One side shall be provided with an approximately 48 by 6 inch (1219 by 152mm) draft tight, high temperature, heat resistant glass observation window, to facilitate viewing the sample during testing. On the same side and below the window is a door which, when open, allows the specimen platform to be moved out for mounting or removal of test specimens. The bottom of the test chamber shall consist of a sliding steel platform, which has provisions for securing the test specimen holder in a fixed and level position. The top of the chamber shall have an exhaust stack with interior dimensions of 4 inches (102mm) wide by 15 inches (380 mm) deep by 12.5 inches (318mm) high at the opposite end of the chamber from the radiant energy source.

(2) *Radiant Heat Source.* The radiant heat energy source will be a panel of porous refractory material mounted in a cast iron frame, with a radiation surface of 12 by 18 inches (305 by 457mm). It shall be capable of operating at temperatures up to 1500°F (816°C (Figure 1).

Figure 1.

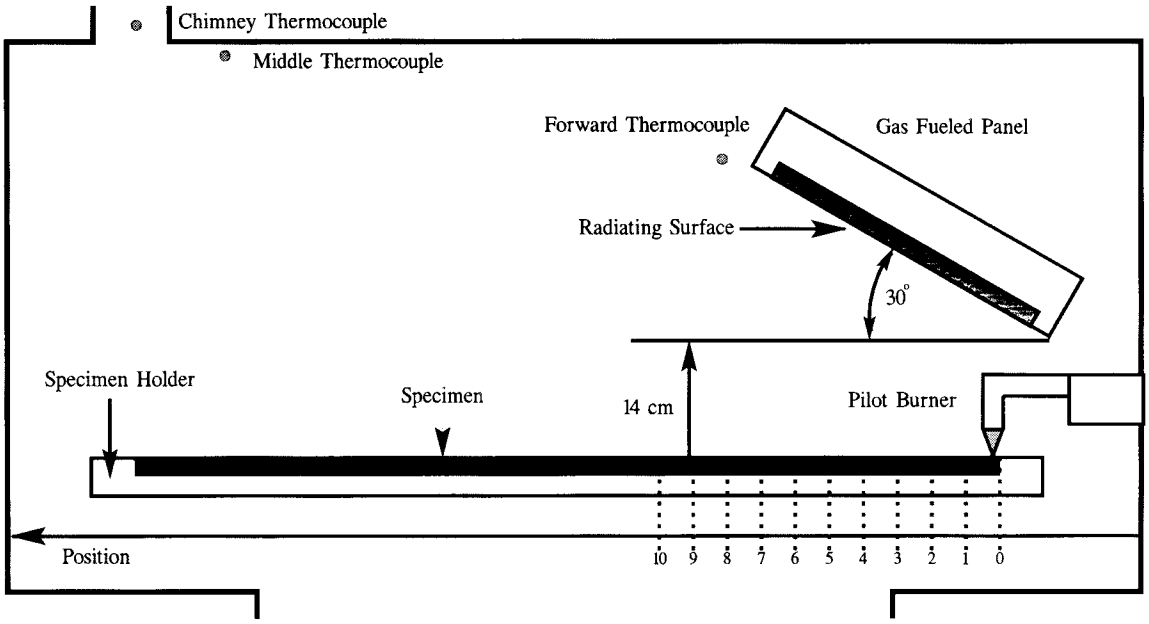

(i) Radiant Panel Fuel System. The radiant panel fuel will be propane (liquid petroleum gas—2.1 UN 1075). The panel fuel system shall consist of a venturi-type aspirator for mixing gas and air at approximately atmospheric pressure. Suitable instrumentation will be necessary for monitoring and controlling the flow of fuel and air to the panel. Instrumentation will include an air flow gauge, an air flow regulator, a gas pressure gauge, and a rotameter for measuring gas flow.

(ii) Radiant Panel Placement. The panel will be mounted in the chamber at 30 degrees to the horizontal specimen plane.

(3) *Specimen Holding System.*

(i) The sliding platform serves as the housing for test specimen placement. A ¼ inch (6.35mm) sheet of Durarock, or other non-combustible base, measuring 43¼ inches by 12½ inches (1098 by 317.5mm) will be placed in the open bottom (base) of the sliding platform. It is necessary to cut the non-combustible base into two pieces for placement in the bottom of the platform, since it will be supported by a ¾-inch (19.1mm) lip that extends around the bottom of the platform base. It is suggested that the shortest piece be placed at the end furthest from the radiant panel (figure 2). A ½ inch (13mm) piece of Kaowoolλ™ board or other high temperature material measuring 41½ by 8¼ inches (1054 by 210mm) will be attached to the back side of the platform. This board will serve as a heat retainer and will protect the test specimen from excessive preheating. The height of this board must not be too high such that it will impede the sliding platform movement (in and out) of the test chamber.

Figure 2: Sliding Platform

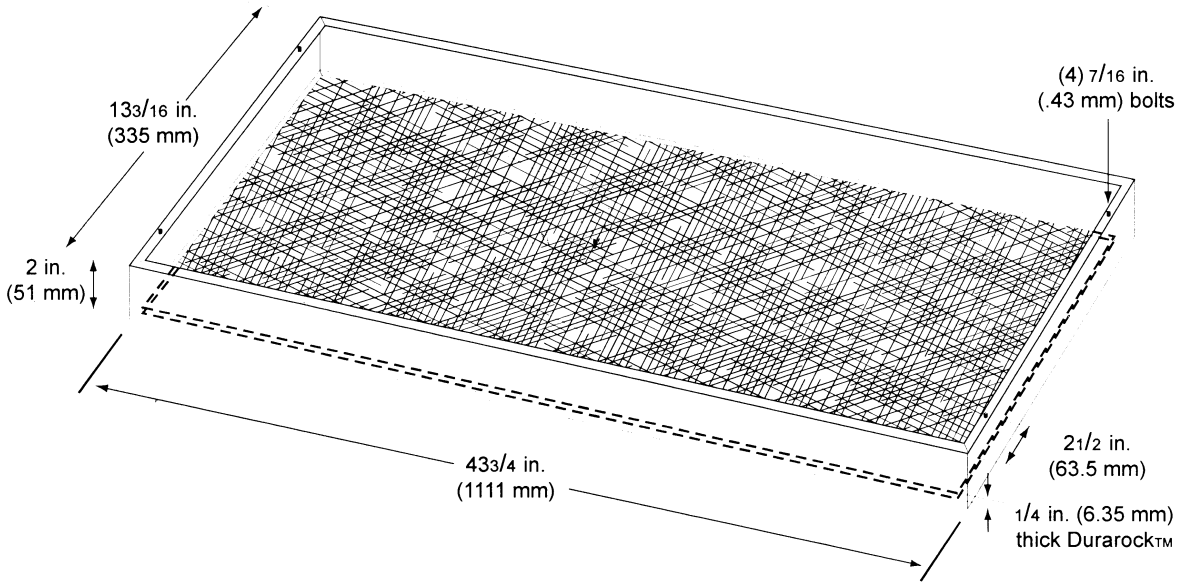

(ii) The test specimen will be placed horizontally on the non-combustible base. A stainless steel retaining frame (AISI Type 300 UNA–NO8330), or equivalent, having a thickness of 0.078 inches (1.98mm) and overall dimensions of 44¾ by 12¾ inches (1137 by 320mm) with a specimen opening of 40 by 7⅞ (1016 by 140mm) will be placed on top of the test specimen. The retaining frame will have two ½inch (12.7mm) holes drilled at each end for positioning the frame to the two stud bolts at each end of the sliding platform (figure 3).

Figure 3: Stainless Steel Retaining Frame

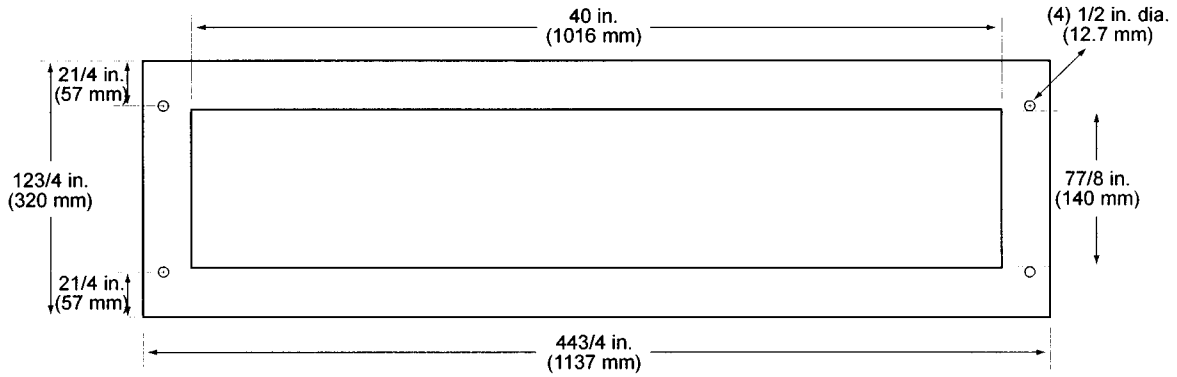

(iii) A securing frame (acting as a clamping mechanism) constructed of mild steel will be placed over the test specimen. The securing frame overall dimensions are 42½ by 10½ inches (1080 by 267mm) with a specimen opening of 39½ by 7½ inches (1003 by 190mm). Hence, the exposed area of test specimen exposed to the radiant panel is 39¼ by 7¼ inches (996 by 184mm). See figure 4. It is not necessary to physically fasten the securing frame over the test specimen due to the weight of the frame itself.

(4) *Pilot Burner.* The pilot burner used to ignite the specimen is a commercial propane venturi torch with an axially symmetric burner tip having a propane supply tube with an orifice diameter of 0.003 inches (0.076mm). The propane flow is adjusted to produce a pencil flame blue inner cone length of ½ inch (13mm). There will be a means provided to move the burner out of the ignition position so that the flame is horizontal and at least 2 inches (50mm) above the specimen plane.

(5) *Thermocouples.* Three 24 American Wire Gauge (AWG) Type K (Chromel-Alumel) thermocouples will be installed in the test chamber for temperature monitoring. All three are inserted into the chamber through three small holes drilled through the top of the chamber. One thermocouple is placed 2 inches (51mm) from the end of the radiant panel and approximately 16 inches (406mm) above the test specimen. The second thermocouple is placed 5 inches (127mm) from the first thermocouple and approximately 16 inches (406mm) from the sample. The third thermocouple is located in the chimney approximately 38 inches (965mm) above the specimen.

(6) *Calorimeter.* The calorimeter will be a one inch cylindrical water-cooled, total heat flux density, foil type Gardon Gage that has

a range of 0 to 5 BTU/ft²-second (0 to 5.6 Watts/cm²).

(7) *Calorimeter Calibration Specification and Procedure.*

(i) Calorimeter Specification.

(A) Foil diameter will be 0.25±0.005 inches (6.35±0.13mm).

(B) Foil thickness will be 0.0005±0.0001 inches (0.013±0.0025mm).

(C) Foil material will be thermocouple grade Constantan.

(D) Temperature measurement will be a Copper Constantan thermocouple.

(E) The copper center wire diameter will be 0.0005 inches (0.013mm).

(F) The entire face of the calorimeter will be lightly coated with ''Black Velvet'' paint having an emissivity of 96 or greater.

(ii) Calorimeter Calibration.

(A) The calibration method will be by comparison to a like standardized transducer.

(B) The standardized transducer will meet the specification given in paragraph (6).

(C) It will be calibrated against a primary standard by the National Institute of Standards and Technology (NIST).

(D) The method of transfer will be a heated graphite plate.

(E) The graphite plate will be electrically heated, have a clear surface area on each side of the plate of at least 2 by 2 inches (51 by 51mm), and be ⅛ inch ±1/16 inch thick (3.2 ±1.6mm).

(F) The 2 transducers will be centered on opposite sides of the plates at equal distances from the plate.

(G) The distance of the calorimeter to the plate will be no less than 0.0625 inches (1.6mm), nor greater than 0.375 inches (9.5mm).

(H) The range used in calibration will be at least 0–3.5 BTUs/ft² second (0–3.9 Watts/cm²) and no greater than 0–5.6 BTUs/ft² second (0–5 Watts/cm²).

(I) The recording device used must record the 2 transducers simultaneously or at least within 1/10 second of each other.

(8) *Calorimeter Fixture.* With the sliding platform pulled out of the chamber, install a 2-rail fixture that has a travel range of 40¼ inches (1022mm) over the sliding platform. The dimension between the 2 rails is 2 11/16 inches (68mm). The rail fixture is screwed into the sliding panel, such that it is always directly under the geometric center of the radiant panel (figure 4). Push the platform into the chamber and insert the calorimeter. The calorimeter, which is mounted in an insulated housing, fits in the rail opening but has enough clearance such that it may be moved along the rail for heat flux readings. The top surface of the calorimeter must be level with the rails.

Figure 4: Angle Iron (1.5x1.5) Securing Frame
*NOTE: All Seams Welded

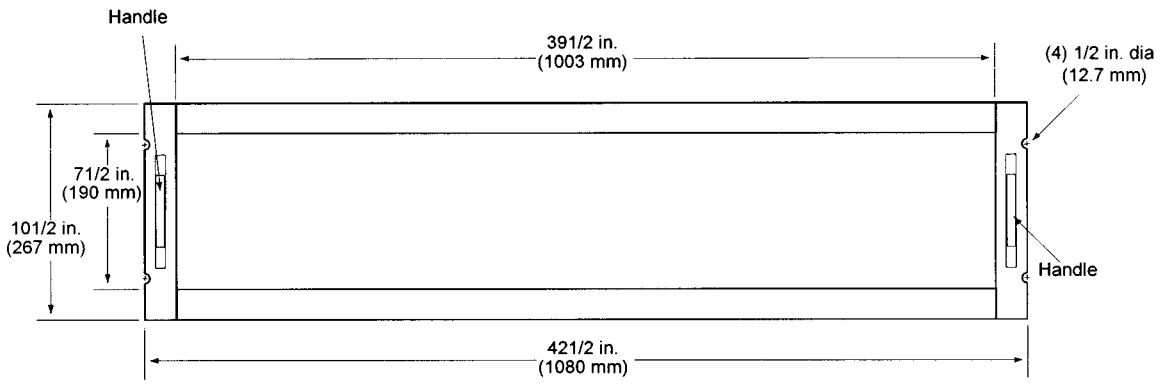

(9) *Instrumentation.* A calibrated recording device with an appropriate range or a computerized data acquisition system will be provided to measure and record the outputs of the calorimeter and the thermocouples. The data acquisition system must be capable of recording the calorimeter output every second.

(10) *Timing Device.* A stopwatch or other device, accurate to ±1second/hour, will be provided to measure the time of application of the pilot burner flame.

(c) *Test Specimens.*

(1) Specimen Preparation. A minimum of three test specimens will be prepared and tested.

(2) Construction. Cut a piece of core material such as foam or fiberglass. If fiberglass is used, cut the material 43½ (±¼) inches long (1093mm) (±6.3mm) by 12½ inches (305.1mm) wide. If using foam, cut the material 41¼ inches (1039mm) by 11 inches wide (279mm) by 1½ inches (381mm) high. Cut a piece of film cover material (if used) large enough to cover the core material. It is permissible to staple the film cover at the ends, as they are not exposed to the radiant heat source. A piece or pieces of an inorganic/inert material such as Kaowoolλ™ or Marinite ™ board may be placed in the bottom of the sliding platform holder if the sample is not thick enough to be level with the top of the sliding platform. The specimen thickness must be of the same thickness as installed in the airplane.

(d) *Specimen Conditioning.* The specimens will be conditioned at 70 ±5°F (21 ±2°C) and 55%±10% relative humidity for a minimum of 24 hours prior to testing.

(e) *Calibration.*

(1) With the sliding platform out of the chamber, install the rail fixture. Push the platform back into the chamber, install the calorimeter (in its housing), and move the calorimeter to the ''zero'' position (figure 5). Close the bottom door located below the sliding platform. The centerline of the calorimeter is 1⅞ inches (46mm) from the end of the sliding platform. This will be the ''zero'' position. The distance from the center of the calorimeter to the radiant panel surface at this point is 7.5 inches ±⅛ (191 mm ±3).

(i) Prior to igniting the radiant panel, ensure that the calorimeter face is clean and that there is water running through the calorimeter.

(2) Ignite the panel. Adjust the fuel/air mixture to achieve 1.5 BTUs/ft²–second ±0.025 BTUs/ft²–second (1.9 Watts/cm²±0.025 Watts/cm²) at the ''zero'' position. Allow the unit to reach steady state (this may take up to 1 hour). The pilot burner is off during this time. The temperature as measured by the thermocouple closest to the panel (forward) is approximately 1100°F (600°C). The temperatures recorded by thermocouples 2 and 3 (thermocouple 3 located in chimney) are approximately 430°F (230°C) and 300°F (135°C), respectively.

Figure 5: Calorimeter Rail

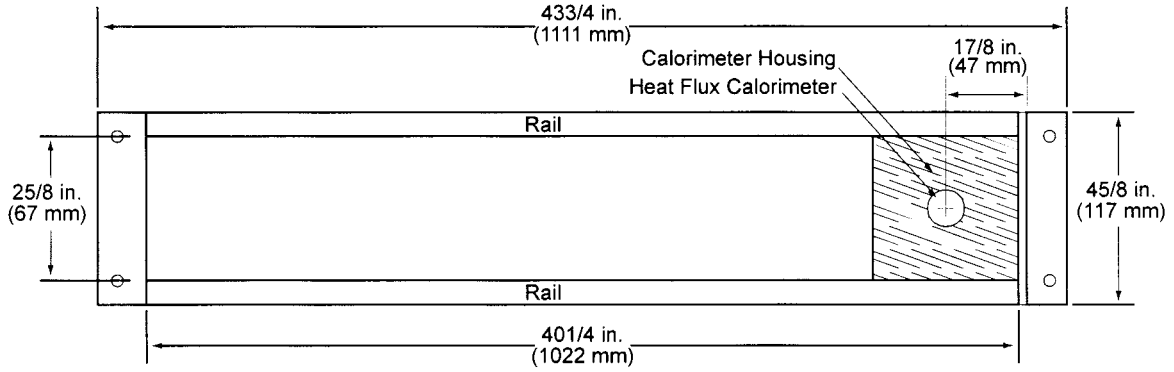

(3) After steady-state conditions have been reached, move the calorimeter 2 inches (51mm) from the ''zero'' position and record the heat flux. Allow a minimum of 30 seconds at each position for the calorimeter to stablize. Record at least 10 positions. (Figure 6 depicts a calibration profile.)

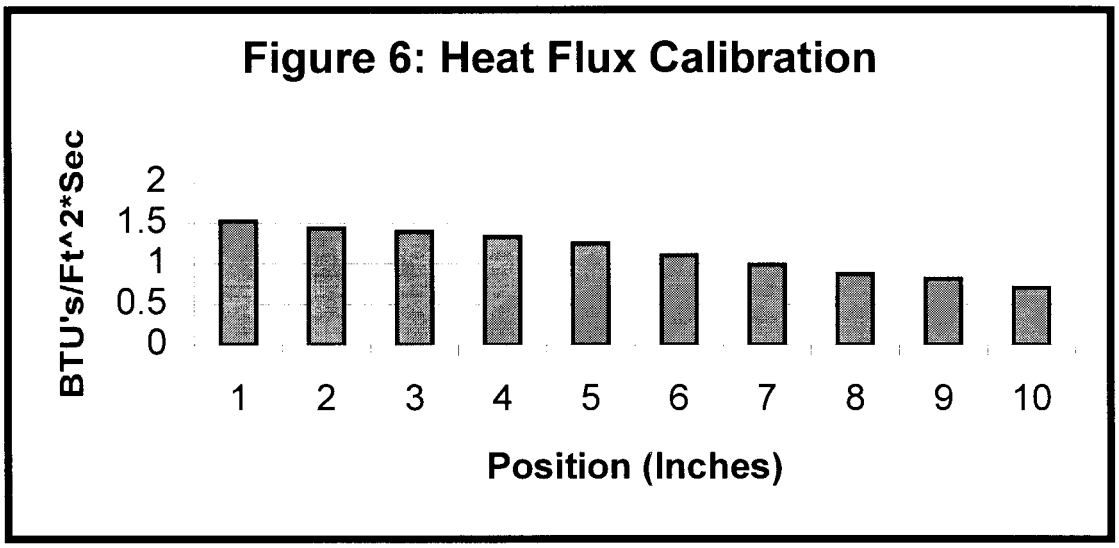

(4) It is not necessary to run a full heat flux calibration (minimum of 10 positions) each time the chamber is powered on. It is required that a heat flux measurement be taken at the ''zero'' position at the start of the test period (*e.g.,* each morning) to ensure that the 1.5 BTU/ft^2–second (1.9 Watts/cm^2) requirement be met. A full calibration should be run periodically.

(5) Open the bottom door, pull out the sliding platform, and remove the calorimeter and rail fixture.

(f) *Test Procedure.*

(1) Ignite the pilot burner. Ensure that it is at least 2 inches (51mm) above the top of the platform. The burner must not contact the specimen until the test begins.

(2) Place the test specimen in the sliding platform holder. Ensure that the test sample surface is level with the top of the platform. At ''zero'' point, the specimen surface is 7½ inches ±1/8 (191mm ±3) below the radiant panel.

(3) With film/fiberglass assemblies, it may be necessary to puncture small holes in the film cover to purge any air inside. This allows the operator to maintain the proper test specimen position (level with the top of the platform). The holes should be made in the sides and/or the corners of the test specimen using a needle-like tool.

(4) Place the retaining frame and the securing frame over the test specimen.

(5) A small mark should be placed on the ''zero'' point.

(6) Immediately push the sliding platform into the chamber and close the bottom door.

(7) Bring the pilot burner flame into contact with the center of the specimen such that the center line of the flame impinges on the ''zero'' point and simultaneously start the timer. The burner flame impinges the sample at an angle of approximately 20 degrees with the horizontal (front of the sliding platform).

(8) Leave the burner in position for 15 seconds and then remove to a position at least 2 inches (51mm) above the specimen.

(g) *Report.*

(1) Identify and describe the specimen being tested.

(2) Report any shrinkage or melting of the test specimen.

(3) Report the Burn length

(4) Report Extinguishing Time

(h) *Requirements.*

(1) During burner application, no flaming is allowed to propagate more than 2 inches (50.8mm) along the sample (to the left in figure 1) of the centerline of the flame.

(2) There shall be no flaming of the test sample after pilot burner removal.

Issued in Renton, Washington, on May 19, 2000.

John J. Hickey,

Manager, Transport Airplane Directorate, Aircraft Certification Service.

[FR Doc. 00–13149 Filed 5–25–00; 8:45 am]

BILLING CODE 4910–13–P

DEPARTMENT OF TRANSPORTATION

Federal Aviation Administration

14 CFR Part 39

[Docket No. 99–NM–162–AD; Amendment 39–11750; AD 2000–11–02]

RIN 2120–AA64

Airworthiness Directives; McDonnell Douglas Model DC–10–10F, DC–10–15, DC–10–30, DC–10–30F, and DC–10–40 Series Airplanes, and Model MD–11 and –11F Series Airplanes

AGENCY: Federal Aviation Administration, DOT.

ACTION: Final rule.

SUMMARY: This amendment adopts a new airworthiness directive (AD), applicable to certain McDonnell Douglas Model DC–10–10F, DC–10–15, DC–10–30, DC–10–30F, and DC–10–40 series airplanes, and Model MD–11 and –11F series airplanes, that requires a determination be made of whether, and at what locations, metallized polyethyleneteraphthalate (MPET) insulation blankets are installed, and replacement of MPET insulation blankets with new insulation blankets. This amendment is prompted by reports of in-flight and ground fires on certain airplanes manufactured with insulation blankets covered with MPET, which may contribute to the spread of a fire when ignition occurs from small ignition sources such as electrical arcing or sparking. The actions specified by this AD are intended to ensure that insulation blankets constructed of MPET are removed from the fuselage. Such insulation blankets could propagate a small fire that is the result of an otherwise harmless electrical arc and could lead to a much larger fire.

DATES: Effective June 30, 2000.

The incorporation by reference of certain publications listed in the regulations is approved by the Director of the Federal Register as of June 30, 2000.

ADDRESSES: The service information referenced in this AD may be obtained from Boeing Commercial Aircraft Group, Long Beach Division, 3855 Lakewood Boulevard, Long Beach, California 90846, Attention: Technical Publications Business Administration, Dept. C1–L51 (2–60). This information may be examined at the Federal Aviation Administration (FAA), Transport Airplane Directorate, Rules Docket, 1601 Lind Avenue, SW., Renton, Washington; or at the FAA, Transport Airplane Directorate, Los Angeles Aircraft Certification Office, 3960 Paramount Boulevard, Lakewood, California; or at the Office of the Federal Register, 800 North Capitol Street, NW., suite 700, Washington, DC.

FOR FURTHER INFORMATION CONTACT: Robert Stacho, Aerospace Engineer, Systems and Equipment Branch, ANM–130L, FAA, Transport Airplane Directorate, Los Angeles Aircraft Certification Office, 3960 Paramount Boulevard, Lakewood, California 90712–4137; telephone (562) 627–5334; fax (562) 627–5210.

SUPPLEMENTARY INFORMATION: A proposal to amend part 39 of the Federal Aviation Regulations (14 CFR part 39) to include an airworthiness directive (AD) that is applicable to certain McDonnell Douglas Model DC–10–30 and –30F series airplanes, and Model MD–11 and –11F series airplanes was published as a notice of proposed rulemaking (NPRM) in the **Federal Register** on August 12, 1999 (64 FR 43963). A second proposal that was identical to the NPRM, except that it affected additional airplanes, was published as a supplemental NPRM on November 17, 1999 (64 FR 62615). Those actions proposed to require that a determination be made of whether, and at what locations, metallized polyethyleneteraphthalate (MPET) insulation blankets are installed, and replacement of MPET insulation blankets with new insulation blankets.

Since the issuance of those NPRM's, the FAA has observed several prototyping exercises that involved the removal and replacement of MPET insulation blankets. The information obtained from these exercises assisted the FAA, operators, and manufacturer in understanding the technical details and impact of the requirements of this AD. Certain aspects of these prototype exercises will be discussed in the FAA's response to the comments received from the NPRM's.

Comments

Interested persons have been afforded an opportunity to participate in the making of this amendment. Due consideration has been given to the comments received.

The FAA has received comments in response to the NPRM's and supplemental NPRM's to Rules Docket No.'s. 99–NM–161–AD [applicable to certain McDonnell Douglas Model DC–9–81 (MD–81), DC–9–82 (MD–82), DC–9–83 (MD–83), DC–9–87 (MD–87) series airplanes; Model MD–90–30 series airplanes; and Model MD–88 airplanes] and 99–NM–162–AD (applicable to certain McDonnell Douglas Model DC–10–30 and –30F series airplanes, and Model MD–11 and –11F series airplanes). Because in most cases the issues raised by the commenters are generally relevant to both NPRM's, each final rule includes a discussion of all comments received.

Support for Proposed AD's

Several commenters support the intent of the proposed AD's; however, they request that some changes be made (discussed later).

Unsafe Condition

One commenter states that, because the MPET insulation blankets only propagate the flame and are not the source of the flame, the proposed AD's should address the unsafe condition (i.e., source of the flame) rather than previously certified material (which met the flammability standard at one time) that is not creating the unsafe condition. The FAA does not concur. MPET insulation blankets, when ignited from a small ignition source, such as an electrical arc, can contribute to the spread of a fire. Such insulation blankets could propagate a small fire and lead to a much larger fire. Potential ignition sources exist in many areas of the affected airplanes. It is extremely difficult to determine where all potential ignition sources are. To provide the level of safety that is expected by the public for transport category airplanes, insulation blankets constructed of MPET must be removed. Therefore, the FAA finds that it has properly identified the unsafe condition (i.e., insulation blankets constructed of MPET) addressed by these AD's.

The same commenter suggests that the subject blankets be handled as ''attrition replacements,'' as intended in the original McDonnell Douglas service bulletins. The commenter states that, since cabin interior flammability has been addressed already to a large extent by the FAA, MPET insulation blankets could be treated comparably, and thus, integrated into the overall interior materials requirements. (The FAA infers that the commenter is referring to the provisions in 14 CFR section 121.312 related to ''substantially complete replacement of the cabin interior.'') These requirements not only mandate stricter new standards, but allow older airplane interiors to remain in service