Federal Communications Commission.

John A. Karousos,

Chief, Allocations Branch, Policy and Rules Division, Mass Media Bureau.

[FR Doc. 00–13598 Filed 5–31–00; 8:45 am]

BILLING CODE 6712–01–P

FEDERAL COMMUNICATIONS COMMISSION

47 CFR Part 73

[DA No. 00–1110; MM Docket No. 00–28; RM–9796]

Radio Broadcasting Services; Christine, TX

AGENCY: Federal Communications Commission.

ACTION: Proposed rule; dismissal.

SUMMARY: This document dismisses a proposal filed by Christine Radio Broadcasting Company requesting the allotment of Channel 245A at Christine, Texas, as the community's first local service. *See* 65 FR 11537, March 3, 2000. As stated in the *Notice,* a showing of continuing interest is required before a channel will be allotted. Since there has been no interest expressed for the allotment of a channel at Christine, the *Report and Order* dismisses the proposal.

FOR FURTHER INFORMATION CONTACT: Kathleen Scheuerle, Mass Media Bureau, (202) 418–2180.

SUPPLEMENTARY INFORMATION: This is a summary of the Commission's Report and Order, MM Docket No. 00–28, adopted May 10, 2000, and released May 19, 2000. The full text of this Commission decision is available for inspection and copying during normal business hours in the Commission's Reference Center, 445 12th Street, SW, Washington, DC. The complete text of this decision may also be purchased from the Commission's copy contractors, International Transcription Services, Inc., 1231 20th Street, NW, Washington, DC 20036, (202) 857–3800, facsimile (202) 857–3805.

Federal Communications Commission.

John A. Karousos,

Chief, Allocations Branch, Policy and Rules Division, Mass Media Bureau.

[FR Doc. 00–13597 Filed 5–31–00; 8:45 am]

BILLING CODE 6712–01–P

FEDERAL COMMUNICATIONS COMMISSION

47 CFR Part 73

[DA 00–1109; MM Docket No. 99–115; RM–9378]

Radio Broadcasting Services; Clio and Tuscola, MI

AGENCY: Federal Communications Commission.

ACTION: Proposed rule; denial.

SUMMARY: The *Notice* in this proceeding proposed the reallotment of Channel 268A from Tuscola, Michigan, to Clio, Michigan, and modification of the license for Station WWBN accordingly. The *Notice* was issued in response to a petition filed by Faircom Flint Inc. See 64 FR 18569, 1999. Based on the information submitted, it has been determined that the reallotment from Tuscola to Clio does not provide a public interest benefit of enough significance to outweigh the loss of a transmission service to Tuscola or offset the disruption of an existing service. Therefore, the proposed reallotment from Tuscola to Clio has been denied. With this action, this docketed proceeding is terminated.

FOR FURTHER INFORMATION CONTACT: Kathleen Scheuerle, Mass Media Bureau, (202) 418–2180.

SUPPLEMENTARY INFORMATION: This is a summary of the Commission's Report and Order, MM Docket No. 99–115, adopted May 10, 2000, and released May 19, 2000. The full text of this Commission decision is available for inspection and copying during normal business hours in the Commission's Reference Center, 445 12th Street, SW, Washington, DC. The complete text of this decision may also be purchased from the Commission's copy contractors, International Transcription Services, Inc., 1231 20th Street, NW, Washington, DC 20036, (202) 857–3800, facsimile (202) 857–3805.

Federal Communications Commission.

John A. Karousos,

Chief, Allocations Branch, Policy and Rules Division, Mass Media Bureau.

[FR Doc. 00–13596 Filed 5–31–00; 8:45 am]

BILLING CODE 6712–01–P

DEPARTMENT OF TRANSPORTATION

National Highway Traffic Safety Administration

49 CFR Part 575

[Docket No. NHTSA–2000–6859]

RIN 2127–AC64

Consumer Information Regulations; Federal Motor Vehicle Safety Standards; Rollover Prevention

AGENCY: National Highway Traffic Safety Administration (NHTSA), DOT.

ACTION: Request for comments.

SUMMARY: The agency believes that consumer information on the rollover risk of passenger cars and light multipurpose passenger vehicles and trucks would reduce the number of injuries and fatalities from rollover crashes. This information would enable prospective purchasers to make choices about new vehicles based on differences in rollover risk and serve as a market incentive to manufacturers in striving to design their vehicles with greater rollover resistance. The consumer information program would also inform drivers who choose vehicles with less rollover resistance that their risk of harm can be greatly reduced with seat belt use to avoid ejection.

The agency has tentatively decided that the Static Stability Factor should be used to indicate overall rollover risk in single-vehicle crashes. This document seeks comment on whether the information should be presented as part of NHTSA's New Car Assessment Program (NCAP), which provides consumer information concerning frontal and side impact protection.

DATES: Comment Date: Comments must be received by July 31, 2000.

ADDRESSES: All comments should refer to Docket No. NHTSA–2000–6859 and be submitted to: Docket Management, Room PL–401, 400 Seventh Street, SW, Washington, DC 20590. Docket hours are from 10 am to 5 pm Monday through Friday.

For public comments and other information related to previous notices on this subject, please refer to Docket No. 91–68; Notice 3, NHTSA Docket, Room 5111, 400 Seventh Street, SW, Washington, DC 20590. NHTSA Docket hours are from 9:30 am to 4 pm Monday through Friday.

FOR FURTHER INFORMATION CONTACT: Gayle Dalrymple, NPS–23, Office of Safety Performance Standards, National Highway Traffic Safety Administration, 400 Seventh Street, SW, Washington, DC 20590. Ms. Dalrymple can be

reached by phone at (202) 366–5559 or by facsimile at (202) 366–4329.

SUPPLEMENTARY INFORMATION:

I. Executive Summary
II. Background
III. Rulemaking History
IV. Recent Research on Maneuver-induced Rollover Crashes
A. Why Study Untripped Rollovers?
B. Estimate of the Annual National Incidence of On-Road, Untripped Rollover Crashes
C. Dynamic Test Program
1. Preliminary Steps
a. NASS Case Studies
b. ODI Complaints
c. Survey of Available Test Procedures
2. Track Testing—Phase Ia
3. Track Testing—Phase Ib
4. Track Testing—Phase II
a. Test Vehicle Selection
b. Results
5. Plans for Continuing Dynamic Test Research
D. How Do Dynamic Rollover Test Results Compare With Metrics?
V. Why Choose SSF?
A. Description of Metrics
B. Tripped and Untripped Rollover
C. Correlation and Causation
D. Simplicity and Measurability
E. Unintended Consequences
VI. Why Not a Standard?
VII. Consumer Information Presentation
A. How Consumers Want to See Information Displayed
B. Converting SSF Measurements to Star Ratings
VIII. Rollover Information Dissemination through NCAP
A. Why NCAP Rather than Vehicle Labeling?
B. Addition of Rollover Resistance Stars to NCAP
IX. Rulemaking Analyses and Notices
X. Submission of Comments
Appendix

I. Executive Summary

This notice requests comment from the public on NHTSA's intent to include a vehicle measure of rollover resistance, its Static Stability Factor, as an addition to the 2001 New Car Assessment Program (NCAP).

According to the 1997 Fatality Analysis Reporting System (FARS), 9,529 people were killed as occupants in light vehicle rollovers. FARS shows that 53 percent of light vehicle occupant fatalities in single-vehicle crashes involved rollover. The proportion differs greatly by vehicle type: 45 percent of car occupant fatalities in single-vehicle crashes involved rollover, compared to 60 percent for pickup trucks, 65 percent for vans, and 79 percent for sport utility vehicles (SUVs). The 1995–1997 National Automotive Sampling System (NASS) estimates that 228,000 light vehicles were towed from a rollover crash each year (on average), and that 25,000 occupants of these vehicles were seriously injured.

The action described by this notice follows a decision by the agency in 1994 (59 CFR 33254) to terminate rulemaking on a minimum standard for rollover resistance and to propose a consumer information approach instead. We have decided to pursue consumer information, through NCAP, to enable consumers to make informed choices about the tradeoffs in vehicle attributes, such as high ground clearance, and rollover resistance. NCAP provides practical advantages over the mandatory consumer information regulation proposed in 1994:

- Implementation would be faster. The program would be able to start almost immediately, so consumers would have the information sooner.
- NHTSA retains control of vehicle measurement so the consumer will know exactly which vehicle model/equipment combination was tested.
- It takes advantage of the existing NCAP organization within NHTSA equipped to perform vehicle tests and disseminate consumer information and avoids the need for a compliance function within NHTSA to collect and process manufacturers' test reports and provide to manufacturers the vehicle ranges required on the labels.

The agency believes that consumer information on the rollover risk of passenger cars and light multipurpose passenger vehicles and trucks, based on the vehicle's Static Stability Factor, would reduce the number of injuries and fatalities from rollover crashes. This information would enable prospective purchasers to make choices about new vehicles based on differences in rollover risk and serve as a market incentive to manufacturers in striving to design their vehicles with greater rollover resistance.

It would inform drivers of the general difference in rollover resistance between light trucks and cars and among vehicles within the various classes. Consumers who need, or desire, a particularly large cargo space, high ground clearance, or narrow track width, would not be denied the chance to purchase such vehicles. However, consumers who choose vehicles with relatively low rollover resistance could do so with knowledge of that fact, something that is not very likely today. The consumer information program would also inform drivers who choose vehicles with less rollover resistance that their risk of harm can be greatly reduced with seat belt use to avoid ejection.

In 1994, the agency proposed a vehicle labeling requirement for rollover information, but we believe that including rollover information in the NCAP program instead may be preferable. The labeling of vehicles with one safety attribute to the exclusion of others may be misleading. A 1996 study by the National Academy of Sciences (NAS) recommended the development of an overall measure of vehicle safety. Until that goal can be met, the presentation of our proposed measure of rollover risk, in the context of our established measures of frontal and side impact crashworthiness in NCAP, would go a long way toward addressing NAS's concern for presenting overall vehicle safety.

II. Background

Rollover crashes are complex events that reflect the interaction of driver, road, vehicle, and environmental factors. We can describe the relationship between these factors and the risk of rollover using information from the agency's crash data programs. We limit our discussion here to light vehicles, which are defined as the combination of (1) passenger cars and (2) multipurpose passenger vehicles and trucks under 4,536 kilograms (10,000 pounds) gross vehicle weight rating (collectively, ''light trucks'').[1]

According to the 1997 Fatality Analysis Reporting System (FARS), 9,529 people were killed as occupants in light vehicle rollovers, including 7,697 killed in single-vehicle rollovers. Eighty percent of the people who died in single-vehicle rollovers were not using a safety belt, and 63 percent were ejected from the vehicle (including 52 percent who were completely ejected). FARS shows that 53 percent of light vehicle occupant fatalities in single-vehicle crashes involved rollover. The proportion differs greatly by vehicle type: 45 percent of car occupant fatalities in single-vehicle crashes involved rollover, compared to 60 percent for pickup trucks, 65 percent for vans, and 79 percent for sport utility vehicles (SUVs).

The 1995–1997 National Automotive Sampling System (NASS) estimates that 228,000 light vehicles were towed from a rollover crash each year (on average), and that 25,000 occupants of these vehicles were seriously injured (defined as an Abbreviated Injury Scale rating of at least 3).[2] This includes 186,000 single-vehicle tow-away rollovers with 17,000 serious injuries. Seventy-six percent of those people who suffered a serious injury in single-vehicle tow-away rollovers were not using a safety

[1] Light trucks include vans, minivans, SUVs, and pickup trucks under 4,536 kilograms (10,000 pounds) GVWR.

[2] A broken hip is an example of an AIS 3 injury.

belt, and 56 percent were ejected (including 48 percent who were completely ejected). Estimates from NASS are that 82 percent of tow-away rollovers occurred in single-vehicle crashes, and 85 percent (159,000) of the single-vehicle rollover crashes occurred off the roadway.

The 1995–1997 General Estimates System (GES) data produce estimates that 240,000 light vehicles rolled over each year (on average) in police-reported crashes, and that 55,000 occupants in rollover crashes received injuries rated as K or *A* on the police injury scale. (The police KABCO scale calls these injuries ''incapacitating,'' but their actual severity depends on local practice. ''Incapacitating'' injury may mean that the injury was visible to the reporting officer or that the officer called for medical assistance.) This includes 207,000 single-vehicle rollovers with 45,000 K or A injuries. Fifty-two percent of those with *K* or *A* injury in single-vehicle rollovers were not using a safety belt, and 18 percent were ejected from the vehicle (including 16 percent who were completely ejected). Estimates from GES are that 16 percent of light vehicles in police-reported single-vehicle crashes rolled over. The estimated risk of rollover differs by vehicle type: 13 percent of cars and 14 percent of vans in police-reported single-vehicle crashes rolled over, compared to 24 percent of pickup trucks and 30 percent of SUVs.

III. Rulemaking History

In 1973 NHTSA issued an Advance Notice of Proposed Rulemaking (ANPRM) on resistance to rollover (38 FR 9598; April 18, 1973). The agency was considering a safety standard ''* * * that would specify minimum performance requirements for the resistance of vehicles to rollover in simulations of extreme driving conditions encountered in attempting to avoid accidents.'' Research projects were undertaken to investigate handling and stability of different types of vehicles in severe steering maneuvers associated with untripped rollovers. The relevant conclusions of the research were that ''vehicle rollover response is dominated by the vehicle's rigid body geometry (with dynamic contributions from suspension effects),'' and that ''untripped rollover, even on high skid-resistance surfaces, is difficult to predict and accomplish.'' The research recommended computer simulation of dynamic testing as a more repeatable alternative to full-scale track testing. Further work on untripped rollover was discontinued in the late 70's.

In September 1986, Congressman Timothy Wirth petitioned NHTSA to establish a safety standard for rollover resistance by setting a minimum allowable Static Stability Factor (SSF) of 1.2. The agency denied the petition in December of 1987 (52 FR 49033, December 29, 1987) stating that ''* * * while a vehicle's stability factor can reasonably predict whether a vehicle which is already involved in a single-vehicle accident will roll over, it does not accurately determine its likelihood of becoming involved in an accident that includes rollover.'' An SSF of 1.2 ''* * * would neither adequately encompass the causes of vehicle rollover nor satisfactorily ameliorate the problem.'' In order to consider a minimum standard, the agency believed it was necessary to understand vehicle characteristics making a single-vehicle crash more likely as well as those predictive of the rollover outcome of a single-vehicle crash.

In June 1988 the Consumers Union (CU) petitioned NHTSA to establish a safety standard to protect occupants against ''unreasonable risk of rollover.'' CU did not suggest a specific remedy. The agency granted the petition in September 1988. From 1988–1993 NHTSA undertook the most comprehensive vehicle and data analysis in its history, studying over 100,000 single-vehicle rollover crashes. This study eventually focused on two vehicle static measurements which seemed promising: Tilt Table Angle and Critical Sliding Velocity. Tilt Table Angle is the angle at which a vehicle will begin to tip off a gradually tilted platform. Critical Sliding Velocity is the minimum velocity needed to trip a vehicle which is sliding sideways. Both of these measurements address the situation in which a vehicle encounters something that trips it into a rollover, such as a curb, soft dirt, or its own tire rim digging into the pavement.

The NHTSA Authorization Act of 1991 (the Act) (part of the Intermodal Surface Transportation Efficiency Act) required the agency to address several vehicle safety subjects through rulemaking. One of the safety subjects was protection against unreasonable risk of rollovers of passenger cars and light trucks. The Act required that NHTSA publish, no later than May 31, 1992, an ANPRM or a notice of proposed rulemaking (NPRM) on this subject. The Act also required the agency to complete a rulemaking action on rollover within 26 months of publishing the ANPRM. The Act explained that this rulemaking would be considered completed when NHTSA either published a final rule or decided and announced that it would not promulgate a rule.

On January 3, 1992 NHTSA fulfilled the first mandate of the Act by publishing an ANPRM (57 FR 242). In the ANPRM the agency stated that it was considering various regulatory actions to reduce the frequency of vehicle rollovers and/or the number and severity of injuries resulting from vehicle rollovers. The agency requested comments on potential regulatory actions in the areas of: improved stability, improved crashworthiness, and consumer information. NHTSA said that it might issue a rule or rules in any one of these three categories, or in any combination of them.

The ANPRM discussed the agency's statistical analyses of the interaction of driver characteristics, vehicle stability metrics, roadway and environmental conditions. The notice described the following vehicle stability metrics as having a potentially significant role in vehicle rollover: center of gravity height; static stability factor; tilt table ratio; side pull ratio; wheelbase; critical sliding velocity; rollover prevention metric; braking stability metric; and percent of total vehicle weight on the rear axle. A vehicle stability metric is a measured vehicle parameter thought to be related to the vehicle's likelihood of rollover involvement. To supplement the ANPRM, a Technical Assessment Paper that discussed testing activities, testing results, crash data collection, and analysis of the data was placed in the docket on January 6, 1992 (NHTSA–1996–1683–4). A description of the individual metrics can be found in the Technical Assessment Paper.

During the development of the ANPRM and after receiving and analyzing comments to the ANPRM, it became obvious that no single type of rulemaking could solve all, or even a majority of, the problems associated with rollover. This view was strengthened by the agency's review and analysis of the comments on the ANPRM. To emphasize this conclusion and inform the public further about the complicated nature of the light duty vehicle rollover problem, the agency released a document titled ''Planning Document for Rollover Prevention and Injury Mitigation'' at a Society of Automotive Engineers (SAE) meeting on rollover on September 23, 1992. The Planning Document gave an overview of the rollover problem and a list of alternative actions that NHTSA was examining to address the problem. Activities described in that document were: crash avoidance research on vehicle measures for rollover resistance, research on antilock brake effectiveness,

rulemaking on upper interior padding to prevent head injury, research into improved roof crush resistance to prevent head and spinal injury, research on improved side window glazing and door latches to prevent occupant ejection, and consumer information to alert people to the severity of rollover crashes and the benefits of safety belt use in this type of crash. The document was placed in Docket No. 91–68; Notice 02, on the same day. NHTSA published a notice in the **Federal Register** announcing the availability of the Planning Document and requesting comment (September 29, 1992; 57 FR 44721).

In June 1994 NHTSA terminated rulemaking to establish a minimum standard, fulfilling the second mandate of the Act, because it found (using statistical simulation of crash outcome) that increasing several vehicle rollover metrics to a level higher than is currently seen in most compact sport utility vehicles would not appreciably decrease crash fatalities and injuries in rollovers (59 FR 33254). In the termination notice NHTSA said, ''The agency believes that no single type of rulemaking or other agency action could solve all, or even a majority of, the problems associated with rollover. Accordingly, it is pursuing a broad range of actions to address those problems.'' The notice discussed the wide range of ongoing agency activities to address the rollover problem and referred to the Planning Document.

In the same June 1994 notice NHTSA proposed to require manufacturers to label their vehicles with information on their rollover stability using either Tilt Table Angle (TTA) or Critical Sliding Velocity (CSV). However, in September 1994, in NHTSA's fiscal 1995 Appropriations Act, Congress stated that NHTSA shall not issue any final rule on vehicle rollover labeling until the agency had reviewed a study by the National Academy of Sciences (NAS) on how to most effectively communicate motor vehicle safety information to consumers. The NAS study, ''Shopping for Safety—Providing Consumer Automotive Safety Information,'' was released in March 1996 (TRB Special Report 248). The NAS study recommended that NHTSA expand the scope of consumer information it provides to the public. In the long term, the study recommends the development of one overall measure that combines the relative importance of crashworthiness and crash avoidance features for a vehicle.

In May 1996 NHTSA issued the ''Status Report for Rollover Prevention and Injury Mitigation'' (NHTSA–1996–1811–2). This document updated the progress of the programs discussed in the Planning Document and added the description of a planned project: development of a dynamic test for rollover and control stability in light vehicles.

On June 5, 1996, NHTSA reopened the comment period on its proposed labeling rule (61 FR 28560). In that notice NHTSA noted that it was reviewing the 1994 proposal in light of the NAS study. On the same day NHTSA published a notice denying a July 1994 petition for reconsideration of the termination of rulemaking on a rollover standard from the Advocates for Highway and Auto Safety and the Insurance Institute for Highway Safety. In the denial the agency noted that it had reviewed and expanded its work on the benefits and cost of a standard based on static vehicle measurements and found the same results: such a standard would eliminate a very popular vehicle type (compact sport utility vehicles) and would not decrease appreciably injuries and fatalities in rollover crashes.

In August 1996 NHTSA received a petition from Consumers Union (CU) asking the agency to develop a test of vehicle emergency handling capability and to provide test results on new vehicles to the public as consumer information. The type of rollover that would be addressed by such a test is known as on-road, untripped rollover, or maneuver-induced rollover. This type of rollover was believed to represent approximately 10 percent of annual rollovers. Since the May 1996 Status Report, the agency had been planning to start a program on dynamic stability testing. Funding for this research was received for fiscal year 1997, and therefore the agency granted the CU petition in May 1997 saying, ''NHTSA will initially focus on exploring whether it can develop a practicable, repeatable and appropriate dynamic emergency handling test that assesses, among other issues, a vehicle's propensity for involvement in an on-road, untripped rollover crash.'' Section IV of this notice details the additional research which has been done since the 1996 CU petition.

Since the vast majority of rollovers are tripped, we have now decided that primary consumer information should be based on factors relevant to tripped as well as untripped rollover, and we have reconsidered the merits of Static Stability Factor as an indicator of rollover risk for consumer information.

IV. Recent Research on Maneuver-Induced Rollover Crashes

A. Why Study Untripped Rollovers?

The causes of *tripped* rollover are well understood. Any vehicle will roll over if it impacts a tripping mechanism with sufficient lateral velocity (such as when the wheels on one side of a vehicle that is sliding sideways hit a curb and the vehicle tips over). A vehicle's static and dynamic rollover metrics are related to the theoretical minimum lateral velocity required for a tripped rollover to occur. Improving a vehicle's static and dynamic rollover metrics increases that theoretical minimum lateral velocity and decreases the potential for rollover.[3] Unfortunately, as we reported in 1994, there is currently no vehicle measurement that can be used in a minimum vehicle safety standard that would decrease the risk of rollover involvement without necessitating drastic design changes to a vehicle type that is sought after by consumers, namely compact SUVs. This is because the rollover rate of an individual make/model is not very sensitive to small changes in metrics, and larger changes in metrics great enough to positively influence rollover rate would necessitate vehicle dimensional changes that would prevent the manufacture of current designs of compact light truck (pickups and SUVs)[4].

In comparison, the causes of *untripped,* on-road rollover are not well understood. Past agency research has never found a light vehicle for which, when empty, the sharpest attainable steady state (constant radius) turn exceeds the vehicle's rollover threshold (although, in our recent track testing, a compact pickup did tip up in a step-steer test). However, our crash data show that light vehicles *do* roll over on the roadway, without tripping, due to abrupt maneuvers. Currently-undefined transient maneuvers may exist that cause rollover for at least some light vehicles. Various crash data studies

[3] Tripped rollovers result from a vehicle's sideways motion, as opposed to its forward motion. When sideways motion is suddenly interrupted, for example, when a vehicle is sliding sideways and its tires on one side encounter something that stops them from sliding, the vehicle may roll over. Whether or not the vehicle rolls over in that situation depends on its speed in a sideways direction (lateral velocity). By measuring certain vehicle dimensions, it is possible to calculate each make/model's theoretical minimum lateral velocity for this type of rollover to occur. These calcualted speeds are relatively low, usually below 15mph, but would be higher in actual crashes.

[4] ''Potential Reductions in Fatalities and Injuries in Single-vehicle Rollover Crashes as a Result of a Minimum Rollover Stability Standard;'' NHTSA; 1994.

have indicated that loss of vehicle directional control is a prelude to rollover in 50 to 80 percent of all rollover crashes [5]. These traits would be particularly important in on-road, untripped rollovers and rollovers resulting from loss of control due to a poor road edge recovery maneuver.

An agency test project done in the mid-1970's on light truck handling reported several interesting findings on braking in a turn, trapezoidal steer, sinusoidal steer, trapezoidal steer while braking, and crosswind sensitivity for light trucks (including utility vehicles) [6]. This study concentrated on discovering the handling properties of ''recreational vehicles'' in use at the time. The goal was not necessarily to discover maneuvers that would lead to rollover for particular vehicles. It was intended instead to ''demonstrate the handling behavior of recreational vehicles when an external disturbance is encountered or while engaged in a variety of evasive actions * * * '' Maneuvers were not chosen for their relevance to crash data. No crash data study was done to determine what maneuvers and situations were common to most rollover crashes.

We decided that in order to cover all possible avenues, for even a small portion of the rollover problem, we should take a new look at untripped rollovers. Our goal was two-fold: To determine the extent of the national incidence of untripped rollover, and to examine commonly used track tests for their potential in acting as an indicator of vehicle tendency to roll over as the result of an on-road maneuver. Admittedly, this type of crash is a small percentage of all rollovers. However, we judged this new research to be worthwhile because this type of crash is very important to consumers (based on comments to the NPRM, at the 1994 town meetings, telephone calls to agency staff, and media interest). It represents the most egregious type of crash, where vehicle performance could be said to be most involved, and it could be the type of crash most affected by a crash avoidance standard if an effective maneuver could be developed.

Our goal was to find a test procedure that would be relevant to what actually happens to today's vehicles on the road. The best way to develop such a procedure was to investigate which situations and driving maneuvers are most common in untripped rollover crashes. Once these maneuvers and situations were identified, field testing could reveal which maneuvers can be performed reliably and repeatably.

B. Estimate of the Annual National Incidence of On-Road, Untripped Rollover Crashes

One important element in determining whether a new Federal Motor Vehicle Safety Standard (FMVSS) for untripped rollover prevention should be established is to determine how often that type of crash actually occurs. Even if it does not occur very often, if we were to develop a standard that would prevent a great majority of these crashes, a benefit would still accrue to the motoring public. We have known for many years that the incidence of untripped, on-road rollover is less than 10 percent of all rollovers. However, exactly how much less was not known and had not been investigated.

The National Automotive Sampling System Crashworthiness Data System (NASS CDS) is a sample of all crashes in the United States that involve damage to a passenger vehicle (car, light truck or van) of sufficient severity to require towing. NASS CDS contains variables describing the type of rollover for vehicles involved in rollover crashes. NHTSA's National Center for Statistics and Analysis recently completed an estimate of the national incidence of untripped rollover using 1992–96 NASS data and a review of rollover crashes completed by NHTSA in 1998. [7] NCSA found that over those years an average of 7,866 untripped rollovers happen each year (standard error 2,340), 4.4 percent of all rollover crashes.

C. Dynamic Test Program

Our interest in untripped rollover, combined with public interest in vehicle stability arising in part from Consumers Union double-lane change tests, [8] led us to undertake a new rollover test program. It was apparent that, since the 1992 ANPRM, the light truck market had expanded and was continuing to grow.

Thus, in late 1996, we started planning a test program in which the goal was to evaluate the best available dynamic rollover resistance test procedures which could be used either in a new vehicle safety standard or in a consumer information program to reduce light vehicle rollover risk. The test program we envisioned would be a full scale evaluation using production vehicles with an emphasis on dynamic track testing as opposed to static laboratory measurements, the latter having been well researched and documented already by that time.

1. Preliminary Steps

As a first step, we identified the candidate procedures for the purpose of measuring light vehicle rollover resistance from among many available possibilities, with consideration given to current ''best practices'' and to actual rollover crash experience. We took the following steps before conducting the full scale test program:

a. Review of a selection of NASS CDS cases in which untripped rollover was the primary harmful event. The review gave a general idea of the circumstances surrounding on-road, untripped rollover crashes and provided some perspective on the types of track testing that would be appropriate to reflect actual crashes of that kind.

b. Review of consumer complaints involving rollovers of light vehicles. The complaints came from an agency database maintained by NHTSA's Office of Defects Investigation (ODI).

c. Comprehensive review of a variety of test procedures from several available sources.

Each of these activities is briefly discussed below.

a. NASS Case Studies

The NASS CDS database for the calendar years 1992 to 1995 included 15 light vehicle rollover crashes which met all of the following criteria:

- the crash was coded ''turnover'', which indicates an untripped rollover, [9]
- a single vehicle was involved and turned over on the road or paved shoulder,
- the rollover was the first harmful event,
- the vehicle was a 1990 or later model year,
- the driver was not impaired, there were no mechanical failures such as a tire blow-out prior to the rollover, and

[5] ''Report to Congress: Rollover Prevention and Roof Crush;'' NHTSA, 1992.

[6] ''Handling Test Procedures for Light Trucks, Vans, and Recreational Vehicles;'' NHTSA, DOT–HS–4–00853; February 1976.

[7] Research Note, ''Passenger Vehicles in Untripped Rollovers;'' NHTSA National Center for Statistics and Analysis; September 1999.

[8] Consumers Union of Yonkers, New York, publishes vehicle evaluations in their Consumer Reports magazine. Part of their evaluation is to have experienced test drivers run each test vehicle through an obstacle avoidance course marked out with traffic cones. The test attempts to simulate an emergency in which a driver, initially traveling straight in a traffic lane, is suddenly forced to swerve to the left into the adjacent lane by an obstacle encroaching into his path from the right, and then swerve back into the original lane. Thus the term ''double-lane change.''

[9] This review of NASS CDS rollover cases was made prior to the 1998 audit of NASS rollover coding. The audit found that many ''turnover'' cases should have been coded as other types, primarily ''trip over''. A discussion of the NASS CDS audit is included in the Research Note cited in this notice.

• the rolled vehicle was not towing a trailer.

These restrictions limited the cases to a selection which could be described as ''maneuver-induced'' rollovers, that is, rollover crashes in which tire-road friction, rather than some other factor such as a collision or contact with a tripping mechanism, can be assumed to have been the primary source of overturning force.

We reviewed hard copy files from each of those 15 cases. The following are the pertinent observations from that review:

• Thirteen of the cases involved LTVs (vans, pickups, or SUVs); the other two rollovers involved sub-compact cars in a loaded condition (three or more occupants).

• In ten of the 15 cases, the vehicle was entering, exiting, or traveling on highways, divided roadways, or interstates with posted speeds of 55 mph or greater and associated entrance/exit ramps prior to crashing. According to the files, two cases involved excessive speed prior to the incident. The remaining five cases occurred in lower speed zones (posted 35 mph or less).

• Only one of the 15 rollovers occurred in an urban setting; the remainder occurred in a rural setting or other non-urban location.

• None of the 15 cases appeared to involve a driver attempting to avoid a stationary or slow-moving object in the roadway. In several cases, the driver swerved or lost control of the vehicle, but the reason for swerving was reported as a moving vehicle, or unknown.

• It appears that driving conditions were generally good in all of the cases (level roads, no precipitation, in daylight or on lighted roadways) except for wet pavement in a few of the instances.

These observations indicated that single-vehicle, untripped rollover crashes most often occur on rural highways; the speeds at which the rollover crashes occur are relatively high compared to, for example, those experienced in the Consumers Union obstacle avoidance maneuver (approximately 30 to 40 mph, depending on the vehicle); and they occur because drivers lose control of their vehicles, sometimes in attempting to recover from having completely or partially left the roadway, as opposed to avoiding an obstacle.

The information derived from these case studies led us to conclude that, in order to evaluate untripped rollover stability of production vehicles, at least one of the test procedures should involve a highway scenario with the test vehicle moving at close to highway speeds (45 mph or greater) and attempting to re-enter the roadway from a shoulder or from some partially off-road disposition.

In reviewing available test procedures, we found mention of a test procedure proposed at one time by General Motors that emulates a roadway recovery scenario. In addition, at a meeting with NHTSA representatives in March, 1997, Suzuki submitted information on three variations of a scenario in which a vehicle leaves or partially leaves a roadway and then rolls over after attempting to re-enter the roadway. One of the three scenarios suggested by Suzuki is similar to the roadway recovery scenario indicated in several of the NASS cases.

An expanded search of NASS CDS data with fewer restrictions than those listed above for the 15 NASS CDS cases yielded 60 untripped rollover cases. In many of those cases, the cause of rollover was coded as ''obstacle avoidance.'' This supported inclusion of an obstacle avoidance test procedure in addition to the roadway recovery test in the NHTSA test program.

b. ODI Complaints

We reviewed a number of complaints of light vehicle rollover in the database maintained by ODI. As of March, 1997, 144 incidences of rollover involving passenger cars, light trucks, SUVs, and vans were found in the database (four other rollover complaints were rejected because they involved other types of vehicles like motor homes and heavy trucks).

Of the 144 complaints, roughly two-thirds were the result of an alleged component failure of some kind. In other words, the rollovers occurred, either directly or indirectly, because a critical component of the vehicle suddenly or unexpectedly broke (*e.g.,* ''axle separated''), seized (*e.g.,* ''brakes locked''), or otherwise failed (*e.g.,* ''steering wobbled'') while the vehicle was in motion. The following are some examples of typical complaint descriptions taken verbatim from the ODI files:

• ''Axle ring broke, causing vehicle to swerve/lose control/rollover,''

• ''Wheel assembly locked up, causing uncontrollable spin/rollover,''

• ''ABS brake locked up after reducing speed to 35 mph, vehicle slid then rolled over.''

• ''Inner tie rod broke at threads near outer tie rod. Vehicle swerved and rolled over.''

The most commonly reported component failures in the rollover complaints were:

• brake lock-up (both conventional and ABS systems),

• other braking system failure (including parking brake),

• steering or suspension component lock-up, separation, or other failure,

• wheel rim, axle, or bearing, separation or failure,

• tire went flat or other tire failure, and

• sudden acceleration

(Note that these failures were allegedly associated with the rollovers as reported in the complaint records, and there was no way to confirm them independently.)

In twenty-four of the complaints, no component failure was cited, and severe vehicle maneuvers were indicated. In these instances, the lack of vehicle rollover resistance appeared to be a primary causal factor, if not the ultimate cause. But this assumption is based solely on the minimal event description given in the ODI database. The following are some examples of the descriptions in which vehicle instability appeared to be a key factor:

• ''Truck rolled over when making clockwise wide arc turn, came to rest on its top.''

• ''While driving at 55 mph, went around an animal on highway, vehicle went out of control, rear fish-tailed, vehicle rolled; injured head, back, shoulder, and arm.''

• ''Lack of reinforcement around sunroof; high center of gravity resulted in rollover.''

There was insufficient information in the database in the remainder of the ODI complaints to allow speculation on the cause of the rollover.

Sixty-four percent of the ODI complaints (92 of 144) involved light trucks, vans, and sport utility vehicles as compared with passenger cars.

c. Survey of Available Test Procedures

We reviewed information on a wide range of test procedures related to vehicle handling and stability, including test methods already in use by vehicle manufacturers, technical standards organizations like SAE and the International Standards Organization, and consumer groups.

We also met with a number of major vehicle manufacturers to discuss their approach to vehicle design and testing with respect to rollover.[10] Each of the manufacturers had a somewhat different approach. In terms of track testing vehicles, manufacturers generally used a

[10] The meetings are documented in docket NHTSA–1998–3206.

battery of maneuvers to assess both handling and stability; no single test was dedicated solely to rollover resistance. Evaluations of rollover resistance were usually associated with more general handling evaluation tests.

One notable exception was a detailed engineering procedure for a ''fishhook'' test devised specifically for rollover propensity testing and submitted to the agency by Toyota Motor Corporation. Some tests were specifically mentioned by other vehicle manufacturers. These included step-steer (J-Turn), steering reversal, slalom, double lane change, and a resonant steering test. Two variations of the ''fishhook'' and two variations of a J-turn test were eventually used in the agency's untripped rollover test program (see sections 2 through 4, below).

Of particular importance among the vehicle manufacturers was their reliance to a very great extent on their own experienced test drivers to provide feedback on vehicle stability. It was evident that, in the realm of a manufacturer's vehicle development and testing programs, there was little incentive to use the most objective procedures possible, such as using a programmable steering controller. For the manufacturers' own purposes in designing the handling and stability characteristics of their vehicles, the skill and experience of test drivers was sufficient.

In NHTSA's review of dynamic rollover resistance test procedures, the initial objective had been to choose an available procedure which could be used, with minimal adaptation, in a test program with a large group of vehicle models. However, after review of available procedures, we concluded that there did not appear to be a single, prominent test among industry users, or one or two test procedures that were clearly superior in most respects for the purpose of rollover resistance testing. We were unable to conclude from the documentation that we reviewed whether any of the test procedures alone would provide an acceptable, practical, and repeatable measure of rollover stability, and one that would be accurate enough to effectively distinguish among many vehicle models of the same vehicle type. Furthermore, there were many procedures that were merely variations of some of the more basic ones. For example, we found reference to at least a half dozen variations on an obstacle avoidance test and each one was essentially a double-lane change.

Since there was insufficient information available on which to make a definitive test procedure selection, we decided to pursue a two phase test program. The first phase would focus on evaluating the various types of test procedures found in our initial review. This evaluation would allow us to eliminate any impractical, repetitive, or inapplicable test procedures. The second phase would then focus on an in-depth analysis of the relatively few test procedures remaining.

2. Track Testing—Phase Ia

For Phase I testing, we selected three popular SUVs in order to experiment with a number of possible test procedures. By using only a few vehicle models in Phase I, we were able to focus on narrowing down the extensive list of possible test procedures to a relatively few choices.

The three Phase I test vehicles were selected based on our desire to gain experience with SUVs in particular, as opposed to passenger cars, vans, or pickups. Also, it was necessary to choose vehicles from the same class to address the original goal of the test program, which was to determine whether dynamic test procedures could differentiate performance among vehicles of the same type. Once it had been decided to concentrate on SUVs in Phase I, the choice of models was made in large part on what we had in hand at the time or could obtain quickly and at low cost. The three models selected were: A 1997 Jeep Cherokee 4-door, four-wheel drive, a 1990 Toyota 4Runner 4-door, four-wheel-drive, and a 1984 Ford Bronco II, 2-door, four-wheel-drive. The suspension of each of these vehicles was mechanically refurbished as necessary prior to testing.

The test procedures that we evaluated in Phase I track testing included the following:

- Step-steer (''J-Turn'')
- J-Turn with pulse braking
- Toyota Fishhook maneuver (with pulse braking)
- Modified Toyota Fishhook maneuver (no pulse braking)
- Steering reversal
- Double lane change (path-following)
- Split-mu (wet epoxy and asphalt)
- Braking in a turn (''Brake and Steer'')

Some of these procedures, such as J-Turn, are generic and can be performed using a range of input parameters including various steering amplitudes and speeds. Although we began Phase I with specific variations of these test procedures in mind, each having predetermined test parameters, we did not limit our evaluation to any predetermined parameters. Instead, the specific test procedure parameters were used as starting points. As we gained experience during the course of Phase I, we made judgements about what were appropriate modifications to suit our testing objectives. For example, the Double Lane Change test was initially modeled after the Consumer's Union Short Course, using the same dimensions and cone spacing, but we experimented with a variety of course layouts by adjusting the cone spacing to give a different steering inputs. In another example, we used a modification of the Toyota Fishhook maneuver to represent a loss of control associated with driving errors in road edge recovery.

The result of Phase I testing was the selection of five procedures for further evaluation in Phase II. The selected maneuvers included two variations of the ''Fishhook'' steering-reversal test, two variations of the J-Turn (one with and one without a pulse brake application), plus a Resonant Steering procedure.

Perhaps the most significant outcome of Phase I testing was our decision to eliminate ''path-following'' maneuvers, including double-lane changes, from further consideration. Our experience in Phase I with path-following maneuvers indicated that they are too subjective. The reason for this was that steering inputs could vary widely over any course demarcated with cones or barriers. When speeds were high enough to push the vehicle to a limit condition, the steering inputs could not be repeated from one run to another. This result was significant because path-following tests, particularly double-lane change (obstacle avoidance) tests such as the so-called ''moose'' test were popular with consumer groups and had received fairly extensive public attention.

Our NASS CDS case studies had indicated that road-edge recovery was a possible factor in five of the 15 rollover crashes reviewed in subsection 1(a) above. The circumstances of these crashes were complex, usually involving a vehicle leaving the paved travel lanes, at least partially, so that two or more of its wheels were on the shoulder. Typically, the rollovers in these cases occurred after the vehicle's driver attempted to steer back onto the paved lanes. Since this scenario is difficult to recreate on a test track, we attempted to simulate it by driving test vehicles on a ''split mu'' surface, that is, with the wheels on one side of the vehicle on dry asphalt and the wheels on the opposite side on a slick surface. In this procedure, the wheels on the slick surface contributed little to the turning force as the vehicle was sharply steered towards the dry side of the test

track lane. The intent was to simulate the lack of traction that exists when two wheels are off the road, tending to resist the driver's effort to steer back onto the paved surface. Unfortunately, this procedure was of limited usefulness. The results were inconsistent from run to run, the lack of traction on one side causing erratic trajectories and leading to spin-outs in some cases. Overall, it was an ineffective simulation of the intended scenario.

A fundamental criticism of any dynamic, path-following maneuver having one or more steering reversals is that it could arbitrarily excite a ''roll resonance'' in some vehicles. That is, the timing of the steering reversal, which would be determined by the geometry of the course layout, had the potential to become synchronized with the vehicle's natural roll response so as to increase the roll motion. The test would be much more severe for any vehicles at roll resonance than for vehicles not at resonance. However, the test results might differ significantly merely by changing the course geometry, so that a different vehicle might have its roll resonance excited.

To address this resonance potential, it was necessary to either identify the conditions for resonance and demonstrate its effect on vehicle stability by intentionally inducing those conditions in a test maneuver, or else show that resonance is not a significant factor in rollover because of suspension damping or for some other reason that mitigates the theoretical effect.

The roll resonance issue led us to choose, as one of the candidate maneuvers for Phase IIa ''resonant steering'' test procedure. In that procedure, the first step was to attempt to determine each test vehicle's roll resonance frequency, and then to drive the test vehicle while oscillating the steering at the resonant frequency and increasing either the velocity or steer magnitude until the vehicle became unstable.[11] Ultimately, as discussed in the Phase II report, the test vehicles appeared to be well-damped and it was not possible to identify a distinct roll resonant frequency. This is an area where we would like to conduct further research and testing.

3. Track Testing—Phase Ib

After gaining some experience with dynamic maneuvers in the early part of Phase I, we decided that some issues that had come up during track testing warranted further exploration.[12] These issues included:

- the effect of tire wear in successive, severe test runs,
- repeatability of steering inputs from one driver to another, and
- the effect of outriggers on vehicle dynamics.

A key development during Phase Ib was the opportunity to experiment with a Programmable Steering Machine (PSM). This device could be mounted in any of the test vehicles and had the capability of inputting high steering rates and amplitudes. This device proved to be a valuable tool for dynamic testing and, to a great extent, addressed the driver variability issue.

Even with the PSM, the driver was still in the vehicle for braking and acceleration. Therefore, outriggers were still necessary. Testing found that outriggers added only slightly to the vehicle's moment of inertia.

Testing in Phase Ib found that tire shoulder wear was significant and caused lateral acceleration to increase with repeated test runs on the same tires. This problem was addressed by implementing a schedule of tire replacement based on the number of test runs.

Another important consideration in Phase I testing was that two-wheel-lift (TWL) could be difficult to recognize by visual observation of test runs. Some instances of TWL could be so small that they might not be apparent to test observers. We considered various methods for positively determining whether TWL occurred, as well as methods for measuring the degree or height of TWL. Ultimately, this issue was not resolved prior to commencement of Phase II. In Phase II, TWL was identified and measured either by direct visual observation of tests or by close examination of videotape records of them.

4. Track Testing—Phase II

a. Test Vehicle Selection

As a first step in conducting the Phase II test program, test vehicle make/models were selected to represent as many light vehicle types as possible of those currently in use on U.S. roads. First, light vehicles were categorized into four types: passenger cars, vans (and mini-vans), pickups, and SUVs. We decided that three vehicles in each category was the minimum sufficient number needed to represent each type and should consist of one compact, one mid-size and one large example from each type, making a total of twelve test vehicles. Additional criteria for selection were the following:

- Only late model vehicles (MY1997–98) to ensure that new vehicles could be procured for testing, and
- Only popular (high-selling) vehicles which had been in production without significant design changes for at least three years to ensure that they were represented in available crash data.[13]

b. Results

The Phase II results are reported in detail in the Phase II Final Report. In general, the results confirmed that light trucks have a lower resistance to tip up as a consequence of sharp steering inputs (high magnitude and rate) than passenger cars. Among the light trucks tested in Phase II, those with more truck-like characteristics (four-wheel drive, higher center of gravity) had a higher tendency to tip up than those with more car-like characteristics (two-wheel drive, lower center-of-gravity).

Furthermore, the dynamic tests results were consistent to a great extent with static measures of rollover resistance. Thus, the dynamic tests confirmed the significance of static metrics as predictors of untripped rollover propensity. This result is significant because, previously, the relationship of static metrics to tripped rollover was well-established, but the same has not necessarily been true of untripped rollover. Certainly, center-of-gravity height and track width do influence untripped rollover.

It is important to mention the influence of test driver safety on the Phase II test program. Even though outriggers were used consistently, the high speeds and abrupt direction changes required in the dynamic tests made it necessary to curtail some test sequences at a point where the test vehicle was starting to become unstable. That is, when a vehicle showed a tendency to begin to lift wheels at a certain speed, repeated runs at that speed may or may not have been attempted depending on safety considerations. Also, whereas runs at even higher speeds might have indicated whether major TWL would occur, higher speed runs were not attempted after the initial indications of tip-up were reached. The question of

[11] ''Unstable'' means two wheels on the same side of the vehicle lift completely off the roadway, to any height for any amount of time.

[12] Since these issues were researched separately, this phase of the test program was designated as ''Phase Ib'' to distinguish it from the earlier part of Phase I which focused on evaluation of the maneuvers. The earlier part of Phase I has since been referred to as ''Phase Ia.'' Eventually, it is our intention to make separate reports available coverting Phases Ia and Ib.

[13] The final selection of twelve make/models is documented in the Phase II final report which can be found in the DOT docket management system under number NHTSA–1998–3206.

whether minor TWL would become major TWL at higher speeds could not be answered due to the concern for test driver safety.

Based on the results of Phase II testing, we concluded from this research that dynamic test methods are not currently superior to simpler, less costly methods, particularly static metrics. The dynamic test results did not conflict with predictions from static metrics. Further, dynamic tests did not provide greater capability to indicate the rollover resistance, either untripped or tripped, of light vehicles. Therefore, we do not believe that dynamic test procedures are developed to the point necessary to be used for a minimum standard or consumer information at this time.

One of the rather surprising results of our track testing was that three vehicles experienced a similar tire problem, ''de-beading'', which resulted in minor or moderate TWL for two of the vehicles. De-beading occurs when the tire loses all of its air due to a separation of the tire bead from its wheel rim. This condition occurred in one SUV, one pickup, and one car. TWL resulted for the two light trucks. All tires were OEM and inflated as prescribed by the vehicles' manufacturers. Why does this de-beading concern us? When the tire separates from the wheel rim, the exposed rim can contact the surface over which the vehicle is sliding. The rim can then dig into the surface and act as a tripping mechanism to initiate a rollover crash. While these crashes are not untripped, they can be on-road and maneuver-induced.

After this unexpected result on the test track, we were interested to know whether this type of rollover initiation is happening in the real world. The NASS CDS data base does not have a specific variable for rollover initiation by tripping on the wheel rim, so a combination of NASS variables was used to estimate the nationwide incidence of this problem. NASS cases were tabulated for single-vehicle rollovers coded ''trip-over'' in which the pre-impact stability state was ''skidding laterally'' (either clockwise or counterclockwise), the ''rollover object contacted'' was ''ground'', the tripping location on the vehicle was ''wheels/tires'', and the rollover initiation occurred on the roadway or a paved shoulder. Using NASS years 1992 thru 1997, we estimate this combination of conditions occurs in an annual average of 11,896 crashes. This preliminary analysis was the best way to estimate the incidence of rollover crashes involving tire de-beading. Maneuver-induced tire debeading is a subject of further research.

5. Plans for Continuing Dynamic Test Research

As stated above, of the five maneuvers evaluated in Phase II, no single one in particular demonstrated greater suitability than the others for the intended purpose of comparing the rollover propensity of the test vehicles. Instead, the occurrences of TWL at any level were distributed among the different maneuvers, and the same is true of TWLs of greater than a minor amount. Thus, we did not succeed in finding just one or two dynamic tests that can effectively distinguish untripped rollover resistance. Also, it would be useful to investigate why the same maneuver run in different directions, for example a left versus right J-turn at a given speed, sometimes yielded different results. This, the resonant steer issue, and steering-induced tire debeading are some of several areas where we plan to continue research on dynamic rollover resistance testing.

D. How Do Dynamic Rollover Test Results Compare With Metrics?

As discussed above, TWL was the primary criterion for evaluating vehicle stability in Phase II dynamic tests. The basic pattern of TWL outcomes in the tests was fairly evident: vehicles with more truck-like characteristics (SUVs, 4WD pick-ups, and full-size vans) tended to have a higher frequency and a greater degree of TWL than vehicles with more car-like characteristics (minivans, two-wheel drive pickups, and passenger cars). As such, it was possible, without detailed analysis of the test results, to draw general conclusions about each vehicle's relative stability and about the various test maneuvers.

Nevertheless, it was desirable to compare the TWL outcomes with some objective indicators of vehicle stability, particularly metrics including SSF, Critical Sliding Velocity (CSV), and Tilt Table Angle (TTA) and to attempt to quantify the relationship between TWL and these metrics to the greatest extent possible using statistical methods.

To do so, the twelve test vehicles first were grouped according to whether they had any TWL in the Phase II tests. It was readily apparent that vehicles with lower metric values (less stable) experienced more frequent and/or a greater degree of TWL than vehicles with higher metric values (more stable). This was true using SSF, TTA, or CSV. Also, test vehicles with below median metric values (considering only the 12 test vehicles) were the only ones that had any TWL (there were two exceptions involving minor TWL, but in one case a tire problem may have influenced the outcome and in the other case the vehicle's CSV value was just slightly above the median). In statistical terms, a strong association was demonstrated between each metric and TWL as a yes/no variable by the fact that TWL occurred only on vehicles with below median SSF, CSV, and TTA values.

Next, the 12 test vehicles were grouped according to whether or not they had any *major* TWL in Phase II, the level of TWL which was thought to represent an actual rollover. Since only one vehicle had major TWL, this grouping meant that the eleven test vehicles without major TWL were all lumped into one category even though they represented a substantial range of metric values. The result was that the statistical tests did not identify a significant correlation between metric values and major TWL.

In a third analysis, the vehicles were grouped according to the highest level of TWL which they experienced during the Phase II tests. Numerical values were assigned as follows:

0=no TWL
1=minor TWL
2=moderate TWL
3=major TWL

When degree of TWL was identified using these designations, the association with metric values was statistically significant and a positive correlation between TWL level and metric values was indicated. (Note that correlations among various static metrics including SSF, TTA, and CSV, has already been established in past agency work [14].)

Overall, the results of the statistical analyses were somewhat ambiguous, as was expected given the low incidence of TWL during testing and the very small sample size overall.

V. Why Choose SSF?

A. Description of Metrics

The agency, vehicle manufacturers and others have used various ''metrics'' and driving maneuvers to characterize the rollover resistance of vehicles in particular situations. Metrics are usually measurements of dimensional, mass and inertial properties of vehicles or calculations combining these properties in ways intended to represent rollover resistance. They have also taken the form of the results of simple static tests

[14] ''Technical Assessment Paper: Relationship between Rollover and Vehicle Factors''; NHTSA; July 1991.

such as tilt table ratio or the combination of static measurements and simple driving maneuver tests such as ''stability margin''. In its ongoing rollover studies, the agency has used several metrics including Static Stability Factor, Tilt Table Angle or Ratio, Critical Sliding Velocity and Side Pull Ratio and various driving maneuvers including J-turn and fishhook maneuvers and sinusoidal steering.

Each of these indicators of rollover resistance has both advantages and disadvantages, and several would be acceptable candidates for comparative consumer information. The agency favors static stability factor because it is applicable to both tripped and untripped rollover. The causal basis for its good correlation to crash outcomes is clear. It is relatively simple for consumers to understand and can be measured inexpensively with good accuracy and repeatability. Also, changes in vehicles to improve static stability factor are very unlikely to cause unintended consequences.

The Static Stability Factor (SSF) of a vehicle is one half the track width, t, divided by h, the height of the center of gravity above the road. The inertial force which causes a vehicle to sway on its suspension (and roll over in extreme cases) in response to cornering, rapid steering reversals or striking a tripping mechanism, like a curb, when sliding laterally may be thought of as a force acting at the center of gravity (c.g.) to pull the vehicle body laterally. A reduction in c.g. height increases the lateral inertial force necessary to cause rollover by reducing its leverage, and the advantage is represented by an increase in the computed value of SSF. A wider track width also increases the lateral force necessary to cause rollover by increasing the leverage of the vehicle's weight in resisting rollover, and that advantage also increases the computed value of SSF. The factor of two in the computation ''t over 2h'' makes SSF equal to the lateral acceleration in g's at which rollover begins in the most simplified rollover analysis of a vehicle represented by a rigid body without suspension movement or tire deflections. In this form, it is easy to compare to the related metrics, Tilt Table Angle and Side Pull Ratio, which are similar except for the inclusion of suspension movement and tire deflections.

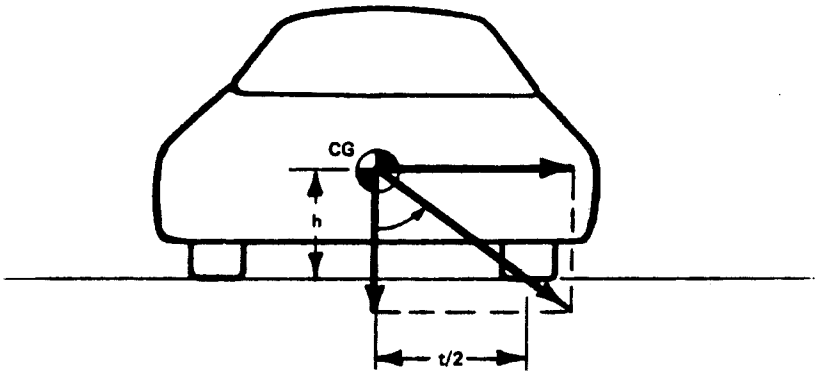

Figure 1. Components of SSF Shown at Critical Lateral Acceleration

A simple test of rollover resistance is to place a vehicle entirely on a table which tilts about a longitudinal axis and raises one side of the vehicle higher than another. As the table continues to tilt, it eventually reaches an angle at which the high side tires lift from the table, and the vehicle rolls over if not restrained. The critical angle is called the Tilt Table Angle. The trigonometric function, tangent, of this angle is the Tilt Table Ratio (TTR), which is the ratio of the component of the tilted vehicle's weight which acts laterally to overturn it, to the component perpendicular to the table which resists overturning. For an idealized vehicle without suspension movements, the TTR is the same as the SSF. The suspension movements of actual vehicles reduce the TTR about 10 to 15 percent relative to the SSF.

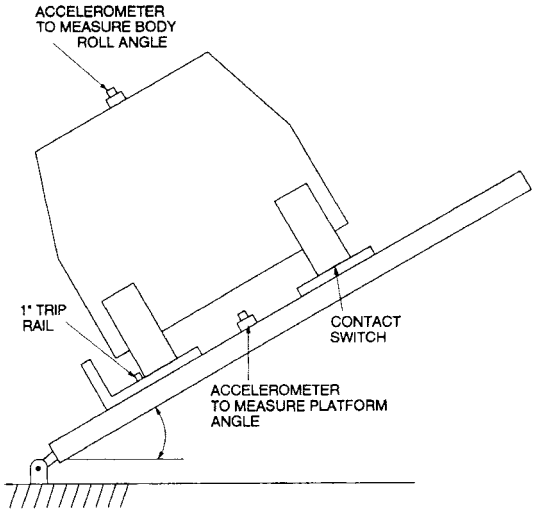

Figure 2 Vehicle on Tilt Table

The Side Pull Ratio (SPR) is the lateral force acting at the vehicle's c.g. necessary to cause two wheel lift, divided by the vehicle's weight. It is determined by a test which is conceptually identical to the tilt table test but which uses an externally applied lateral force to cause the wheels on one side of a vehicle parked on a horizontal surface to lift up. It exercises the vehicle suspension more realistically because the whole weight of the vehicle remains on its suspension. In the tilt table test, the vehicle can rise somewhat relative to the table surface because the component of the vehicle weight which compresses the suspension springs steadily diminishes as the angle of the table increases. For an idealized vehicle without suspension movements, the SPR also is the same as the SSF. Again, the suspension movements of actual vehicles reduce the SPR relative to the SSF by about 10 to 15 percent.

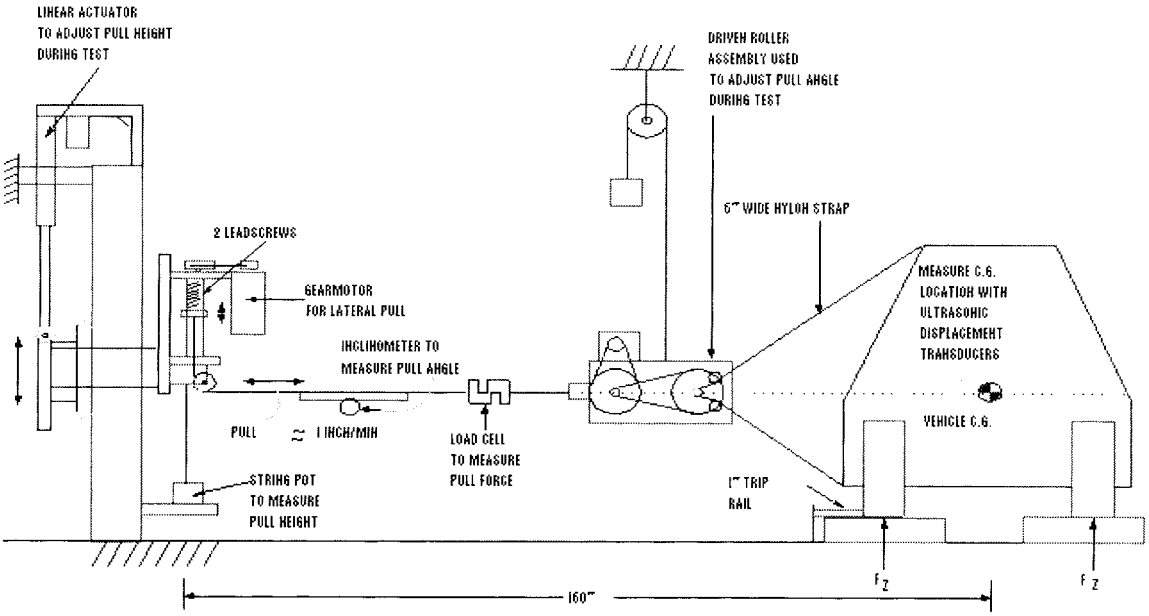

Figure 3 Side Pull Ratio Measurement

Critical Sliding Velocity (CSV) is a metric tied directly to tripped rollover. It is a calculation of the lateral velocity necessary to cause a rigid body representation of a vehicle to overturn upon impact with a rigid tripping mechanism. It includes the c.g. height, track width, mass and roll mass moment of inertia of the vehicle in the calculation.

Stability Margin is a metric directed toward on-road untripped rollover. It is the difference between the Side Pull Ratio of a vehicle and its maximum lateral acceleration in g's, as measured in a steady state cornering test. The steady state cornering test consists of finding the maximum speed the vehicle can maintain while following a circular path. The idea is that if the cornering acceleration the vehicle can produce is less than the SPR, it would not be possible for a rollover to occur simply as a result of steering maneuvers. GM recommends a margin of 0.2 g's because lateral accelerations in maneuvers with rapid steering reversals and/or brake release in a curve can be greater than those measured in a steady state test.

B. Tripped and Untripped Rollover

The terms on-road and off-road rollover are sometimes thought of as surrogates for tripped and untripped rollover. Off-road rollover does not refer to vehicles rolling over while trying to negotiate difficult trails away from public roads. It refers to vehicles leaving the road in the course of a crash and rolling over off the pavement. Usually, but not always, a curb, a soft shoulder, a ditch, loose gravel, a guard rail or another tripping mechanism initiates the rollover. In contrast, most people associate only the frictional force between the tires and the pavement rather than a tripping force with on-road rollover involving a single vehicle. This is also called maneuver-induced rollover.

Past NHTSA studies of crash data from the state of Maryland [15] and NASS [16] suggested that between 8 and 10 percent of single-vehicle rollover crashes were on-road rollover. However, a recent study of audited NASS CDS data (a data sampling system with projection factors to represent the national trends) estimated that while over 13 percent of rollovers in single-vehicle crashes occur on-road or on a paved shoulder, only 4.2 percent are untripped. Examples of on-road tripped rollovers are instances in which potholes or differences in pavement level acted as tripping mechanisms and the more common instances in which the wheel rim dug into the pavement (possibly as a result of tire de-beading). The study also estimated that only 0.2 percent of rollovers are untripped and off-road.

The agency has conducted studies of on-road untripped rollover because these events are considered egregious by the public and because the prospects of developing objective, repeatable and realistic vehicle tests of untripped rollover appeared to be more favorable than for tripped rollover, in which the circumstances are limitless. Many of the vehicle attributes that improve resistance to untripped rollover also improve resistance to tripped rollover. Certainly, a low c.g. and a wide track width are beneficial in resisting rollover in general.

However, even objective and repeatable steering maneuver tests present a dilemma. Suppose the first vehicle responds to steering maneuvers up to a high test speed and two wheel lift occurs. Suppose the second vehicle spins out or plows out at a significantly lower speed, but two wheel lift does not occur. Which vehicle has better performance in rollover resistance? If untripped on-road rollover is the only criterion, the second vehicle has demonstrated better performance because it cannot be controlled through a test maneuver severe enough to cause two wheel lift. But the test tells us nothing about the far more likely risk of tripped rollover. We do not know how the second vehicle would have performed under the same lateral acceleration that caused two wheel lift in the first vehicle.

Stability Margin shares the dilemma for vehicle comparisons described above. The SPR component of stability margin compares vehicles on an equal basis that would be meaningful for tripped or untripped rollover, but the subtraction of the maximum on-road lateral acceleration limits the applicability of the margin to on-road untripped rollover. Simply fitting the same vehicle with lower traction tires increases the stability margin without making any difference when a tripping mechanism is encountered. Even when the scope of interest is limited to on-road untripped rollover, Stability Margin is unsuitable for comparative purposes. A greater stability margin does not necessarily mean more safety. A margin in excess of the minimum necessary to avoid untripped rollover may simply represent poor cornering capability.

The steering maneuver tests studied by the agency were consistent with SSF, TTR and CSV. The only vehicles that experienced two wheel lift in the maneuvers were those at the lower range of the metrics. However, the steering maneuver tests studied do not distinguish between those vehicle attributes that increase rollover resistance in all circumstances and those applicable only in the narrow risk category of on-road untripped rollover. Therefore, the steering maneuver tests recently studied are not considered as appropriate for general consumer information on rollover as SSF, TTR or CSV.

C. Correlation and Causation

Correlation means that two events generally occur together. However, the fact that event B occurs when event A occurs does not mean that event B occurs because event A has occurred. Thomas Sowell, the economist and columnist, notes that youngsters who voyage on the Queen Elizabeth II or ride on the Concorde tend to make more money as adults, but that we don't recommend buying tickets for these as a way to increase a child's earning potential. Childhood luxury trips are correlated to future earnings, but do not cause the higher income.

A causal relationship, on the other hand, means that event B occurs because event A has occurred. These events are not simply linked in time, like in a correlation, but event A is a necessary element for event B to occur. In a simple form, the plant grows because of the light. Light is not the only thing needed for the plant to grow, and the plant may die even if it receives plenty of light, but there is a causal relationship between inadequate light and plant death.

Just as with light and plants, a low SSF is not the only thing that is needed for a rollover and a rollover may occur even if a vehicle has an excellent SSF, but there is a causal relationship between SSF and rollover. At the initiation of either tripped or untripped rollover, the moment arm for the principal overturning force is the c.g. height, and the moment arm of the principal restoring force is the track width divided by two. In the case of tripped rollover, the severity of the impact with a tripping mechanism determines the principal overturning force. Depending on the circumstances, roll moment of inertia, suspension deflections, tire properties and other vehicle properties influence rollover—but never to the exclusion of c.g. height and track width. Among the many causal factors included in mathematical models of various rollover scenarios, c.g. height and track width are always present and usually exert the most influence.

While the vehicle properties represented by SSF, TTR, SPR and CSV are directly and causally related to vehicle rollover, that alone does not prove that the vehicle properties exert enough influence to be noticed in the context of the driver and roadway variables. Especially in the context of tripped rollover, the circumstances of the crashes and the nature of the tripping mechanisms may be nearly unique from crash to crash. Examination of a large number of crashes may be necessary to detect even powerful influences with any degree of certainty. Statistical correlation of the metrics to the rate of rollover occurrences of representative vehicles in actual crashes is the usual method of determining their influence. The agency has demonstrated significant correlations between SSF, TTR and CSV and the rate of rollovers

[15] E.A. Harwin and L. Emery; ''The Crash-avoidance Rollover Study: a Database for the Investigation of Single-vehicle Rollover Crashes;'' 12th International Technical Conference on Experimental Safety Vehicles, Goteburg, Sweden, May 29–June 1, 1989; Vol 1, p. 470–477.

[16] ''Technical Assessment Paper: Relationship between Rollover and Vehicle Factors''; July 1991. Computation of untripped rollover based on 1989 NASS.

per single-vehicle crash in past studies of the crash reports recorded by particular states.[17],[18] The agency has consistently found that given a single-vehicle crash, the SSF, TTR or CSV of the vehicle is a good statistical predictor of the likelihood that it will roll over. The number of single-vehicle crashes has been used as an index of exposure to rollover because it eliminates the additional complexity of multi-vehicle impacts and because about 82 percent of light vehicle rollovers occur in single-vehicle crashes.

The statistical study described in the Appendix to this notice was undertaken to develop a relationship between SSF and rollover rate representative of the whole country rather than a particular state. The average rollover/single-vehicle crash rate varies from state to state because of differences in reporting thresholds for single-vehicle crashes and real differences in road conditions, vehicles and drivers. A relationship between rollover rate and SSF normalized to the national rollover rate and to a nationally representative set of driver and road use variables was developed as a basis for a comparative rating system for rollover risk in the event of a single-vehicle crash. We had available crash reports of 185,000 single-vehicle crashes from six states from 1994 to 1997 in which it was possible to determine the make/model of the vehicles and whether rollover occurred in the course of a single-vehicle crash, and for which SSF data were also available. We also had the NASS GES data sampling system, with far fewer but nationally representative crash reports, to determine the national average rollover rate for the population of vehicles investigated in the state reports.

The study of state reports of single-vehicle crashes was performed as a regression analysis, in which the square of the coefficient of regression (the R^2 statistic) indicates the degree to which the differences between the data samples can be explained by the independent variables. In this case, the R^2 calculated for the rollover rates of about 100 vehicle make/models as a function of SSF ranged from 0.53 to 0.76 across the states. This means that between 53 percent and 76 percent of the differences in rollover rate of the subject vehicles can be explained by differences in SSF.

However, an analysis using only SSF does not preclude the possibility that cross correlations of SSF with other factors could create a level of correlation beyond the causal relationship of SSF to rollover. For example, if the drivers of vehicles with low SSF were generally more aggressive, the degree of correlation could be raised by the greater chance of these vehicles leaving the road at high speed. Likewise, if vehicles in a particular range of SSF were operated more often than others on poor road surfaces, their exposure to tripping mechanisms as well as their rollover resistance would be reflected in a correlation with SSF. Because of the possibility that the apparent influence of SSF on rollover could be due in part to cross correlations, the agency also performed a stepwise regression analysis in which the available variables describing driver and road characteristics were given the first opportunity to explain the differences among vehicles in rollover rate. In this analysis, cross correlations would reduce the apparent influence of SSF because part of its effect would have already been included in a cross correlated driver or road variable. The driver and road use characteristics recorded in the crash reports of the various states included gender, age, alcohol involvement, number of occupants, day or night, stormy weather, road speed limit over 50 mph, bad road or road surface, rural location, curve, and hill. When only the driver and road use variables, but not the SSF, for each vehicle were considered, it was found that their cumulative information could explain between 53 and 69 percent (differing with State) of the variability between vehicles in rollover rate. When SSF was added to the available driver and road characteristics, the explanatory power of the information increased to between 85 and 90 percent. The addition of SSF explained between 64 and 80 percent of the variability remaining after consideration of the driver and road variables.

The six-state model that included all 185,000 single-vehicle crashes yielded similar results. When only the SSF of the vehicles is considered (with a correction for systematic differences between States) the R^2 statistic was 0.73; when the driver and road variables rather than SSF were entered, the R^2 statistic was 0.58; and when the SSF was added to the driver and road variables R^2 statistic rose to 0.88. In the direct correlation, SSF appeared to explain about 72 percent of the variability in rollover rate between crash experiences of about 100 vehicle/make models in six states. If cross correlations between the vehicle SSF and driver and road variables cause the direct correlation to be optimistic, the same cross correlations would diminish the apparent influence of SSF in the stepwise regression in which the driver and road variables alone were entered first. However, SSF remained influential in the stepwise regression with the power to explain 72 percent of the remaining variability after the entry of the driver and road use variables. (Note: The similarity of 72 and 73 percent in the two analyses is merely a coincidence. While 73 percent is the R^2 statistic in the direct correlation, 72 percent is the ratio $(0.88 - 0.58)/(1.0 - 0.58)$ in the stepwise analysis.)

Rollover is a very complex event, heavily influenced by driver and road characteristics as well as vehicle properties. The most important non-vehicle variable may be the speed at which the vehicle leaves the roadway, for which some of the driver and road use variables are only broadly indicative. However, the directly causal influence of SSF is sufficient to explain a large portion of the variability among vehicles in real-world crash experiences in either a direct correlation or stepwise analysis of the variability remaining after consideration of driver and road use variables. It is not lost in the noise of complex circumstances, and its explanatory power exceeds the cumulative explanatory power of all other available driver and road use variables in most instances.

The same analyses using TTR or CSV would be expected to yield similar results based on past agency studies. In fact, CSV might show slightly higher correlations because most rollovers are tripped. However, the choice of a rating metric was not made simply for incremental gains in R^2 among metrics, since each one provides a high level of correlation to rollover crash rates. The simplicity and generality of SSF have value in a rating system intended for consumers. In addition, there is only modest room for improvement over a metric which already explains 73 percent of the variability in rollover rates left after application of driver and road use variables.

In some analyses, the inclusion of wheelbase, which is simple, improves the correlation coefficient. Wheelbase has not been included here because, unlike the components of SSF, it does not have a direct causal relationship with rollover. It may be a surrogate for roll moment of inertia, yaw moment of inertia, or pitch moment of inertia, each of which may influence rollover in

[17] *Ibid.*

[18] E.A. Harwin and Howell K. Brewer; ''Analysis of the Relationship between Vehicle Rollover Stability and Rollover Risk using the NHTSA CARDfile;'' NHTSA, 1989.

certain circumstances. Alternatively, wheelbase may be a surrogate for owner demographics within certain vehicle classes. We have chosen not to include factors which correlate to rollover through cross correlation to other undefined factors.

D. Simplicity and Measurability

The principle of SSF is obvious. The fact that an object which is more top heavy or narrower at its base can be turned over more easily is encountered repeatedly in common experience and is intuitive for most consumers. Track width is a straightforward dimensional measurement which can be measured very accurately given sufficient care, and special fixtures and calipers can be constructed to make the task easy. In past comments to the agency, lack of repeatability of c.g. height measurement between various labs was cited. However, improvements in equipment and technique have taken place. The agency's own lab and a contractor using similar equipment report errors no greater than one half of one percent in c.g. height measurement of vehicles.[19]

Tilt Table measurements expressed either as TTR or TTA also have the advantage of accuracy and relative ease of measurement. The process of tilt table measurement should make intuitive sense to the public, but the conversion from an angle to a trigonometric ratio may not. The reporting of the angle is less complicated, but it creates a non-linear measurement that does not increase as rapidly as the actual improvement of rollover resistance expressed in TTR.

CSV would be easier for the public to understand were it the result of a full scale vehicle test rather than the computation of a simplified model. While the public should understand track width and c.g. height, the additional concept of roll moment of inertia is outside common experience. The simplified model also results in CSVs that are unrealistic in absolute value, though useful for comparison of vehicles. The computation predicts that lateral speeds of 10 to 15 mph are sufficient for tripped rollover of virtually all light vehicles from large cars to compact SUVs. The low threshold may not appear to be credible to consumers who have experienced hard curb contact with only wheel and tire damage and may trivialize the information by causing consumers without such experience to conclude that all vehicles will turn over so easily that differences between vehicles are not worth consideration.

In fact, the lateral speeds for tripped rollovers of actual vehicles in common circumstances would always be greater than the computed CSV. Instead of being available to raise the vehicle's c.g. to the rollover point, much of the kinetic energy from the vehicle's lateral speed would be dissipated by tire contact with the ground, stored or dissipated in tire and suspension deflections, and dissipated in the permanent deformation of vehicle suspension components and of the tripping mechanism. The calculation of CSV requires a measurement of roll moment of inertia in addition to the measurements needed to calculate SSF, but that is not an obstacle. The agency's own lab and a contractor using similar equipment report errors no greater than two percent in roll moment of inertia measurements of vehicles.

Side Pull Ratio has intuitive appeal if one can understand that the inertial forces which cause tripped or untripped rollover can be represented by forces applied in a laboratory with a cable pulling at the c.g.. However, it is difficult to coordinate the movement of the outboard end of the cable with vehicle roll motion and to avoid applying extraneous vertical forces. For this reason SPR is often estimated from SSF with modifying factors for the roll stiffness of the vehicle and its general suspension type.

The simplicity and relative ease of measurement of SSF and TTR are advantageous for consumer information.

E. Unintended Consequences

In comments to the 1992 ANPRM on rollover issues, several manufacturers pointed out that some changes that could improve a vehicle's tilt table performance may degrade its control and handling attributes. Aspects of suspension design, such as choices of front to rear roll stiffness ratio and overall roll stiffness, could be different from those now chosen to balance ride quality, handling, tire wear and other important features if they were influenced by a desire to maximize TTR. Commenters to the same docket claimed that measurements of c.g. height were difficult and not repeatable in comparison to the tilt table measurement.

These comments presented the agency with a dilemma. The most practical rollover resistance metric from a measurement viewpoint, TTR, had the potential to introduce new trade-offs for suspension designers. Obviously, the agency does not want vehicle manufacturers to depart from designs which they believe optimize safe handling and directional control. Improvements in the methods of measuring the c.g. height of vehicles have occurred that resolve the concerns raised in the comments. SSF is now as practical and repeatable a measurement as TTR.

Changes in track width or c.g. height to improve SSF do not require trade-offs of handling and control. In general, those particular changes would make it easier to achieve good handling. A potential trade-off discussed in the agency's 1987 denial of a rulemaking petition for a minimum level of SSF was the possibility of manufacturers reducing the strength of the upper structure of vehicles in order to lower the c.g.. At that time, FMVSS No. 216 on roof crush resistance did not apply to SUVs, vans or pickup trucks. Beginning with the 1995 model year, the roof crush resistance of light trucks including SUVs and vans has been included in the regulation, making that potential choice to compromise safety even less likely.

VI. Why Not a Standard?

The action contemplated by this notice follows a decision by the agency (59 CFR 33254) to terminate rulemaking on a minimum standard for rollover resistance and to pursue the consumer information approach instead. In the analysis leading to that decision, the agency concluded that both Tilt Table Angle and Critical Sliding Velocity were causally related to rollover and had a strong statistical relationship to rollover frequency. However, the benefits achieved by setting a minimum level for a rollover metric, even well beyond that of truck-based SUVs or full size vans, were not great enough to compel the costs of fundamental vehicle changes and the loss of attributes desired by customers. Also the redesign could result in the elimination of some classes of vehicles, such as compact SUVs.

The above conclusions about a general rollover standard recognized that most rollovers are tripped. The circumstances of tripped rollover usually involve leaving the road surface unintentionally and hitting a tripping mechanisms such as a curb, a ditch or soft soil. There is a nearly infinite variety of tripping mechanisms and ways in which vehicle can strike them. Basic changes in the geometric properties of vehicles, as reflected in SSF, TTA, and CSV, are necessary for realistic improvements in tripped rollover resistence. However, improvements in on-road untripped rollover performance may not require

[19] Heydinger, G.J., et al; ''Measured Vehicle Inertial Parameters—NHTSA's Data through November 1998;'' Society of Automotive Engineers 1999–01–1336; March, 1999.

geometric changes at odds with the attributes consumers seek in certain classes of vehicles. While tripped rollover is much more common than untripped rollover, there is public concern about the danger of untripped rollover. The agency remains interested in the possibility of a minimum performance standard to address the problem of untripped on-road rollover. Its seeks comment on the need for a standard addressing on-road untripped rollover and requirements that may be appropriate for such a standard.

The analysis of benefits in the 1994 notice to terminate rulemaking for a minimum standard was concerned primarily with tripped rollover. The expected benefits of a potential minimum standard were based on a logistic regression analysis of the sensitivity of rollover risk in single-vehicle crashes to changes in rollover resistance metrics. Rollover metrics such as TTA, CSV, and SSF are relevant to tripped rollover. The outcome of each crash in a data base of 90,000 single-vehicle crashes reported by the state of Michigan was re-evaluated individually changing the rollover resistance metric but retaining the other vehicle, driver, and road characteristics of the actual crashes. The result was a set of predictions by vehicle class of the sensitivity of rollover rate to incremental changes in the rollover resistance metric, while preserving the potentially influential demographic and environmental factors associated with actual crashes of vehicles in particular classes. The percent improvement in rollover rate for a vehicle class was determined from the production volume, single-vehicle crash rate, and amount of change in the rollover resistance metric demanded by a potential standard for the vehicles in that class. The benefits were calculated from the reduction in rollover rate for the vehicle class, the total number of fatalities and injuries occurring in vehicles of that class, and the degree of harm mitigation accomplished when a crash is prevented from becoming a rollover crash.

Rollover prevention was not considered crash prevention but rather a reduction in the severity of crashes by 52 percent in fatalities and 25 percent in injuries. The mitigation value of rollover prevention was estimated by comparing the harm to occupants in single vehicle crashes with and without rollover in the NASS database for the years 1988–91.

Note that the demographic variables are handled differently for estimating the sensitivity of rollover risk to vehicle metrics for analyses of a minimum standard versus consumer information. In the case of a minimum standard, it is assumed that the driver and roadway demographics of a vehicle class remains unchanged but that the vehicle metric of some vehicles in the class changes. In the case of consumer information, the rollover risk of all vehicles is estimated using the same set of average demographic variables because individual consumers do not change their age, gender or driving environment as a result of vehicle choice.

At a minimum TTA of 46.4 degrees (equal to a TTR of 1.05 and equivalent to a minimum SSF of about 1.18), reductions of 63 fatalities and 61 serious injuries were estimated. No standard van and few, if any, compact SUVs with permanent top structures could meet that hypothetical standard, and a third to a half of compact pickups, minivans and standard full size SUVs were found to be unable to meet it. A parallel analysis using CSV instead of TTA yielded similar results except that standard vans were unaffected because their large roll moments of inertia improve CSV. Most of the benefits were calculated on the basis of increasing the rollover resistance of some compact pickups and many compact SUVs on the order of 10 percent of the TTR.

Changes in c.g. height or track width of vehicles to increase rollover resistance by 10 percent are substantial and compromise some of the attributes consumers desire. For example, a 10 percent increase in track width (which would increase TTR about equally) is nearly 6 inches for a typical compact SUV. Substantial chassis changes would be required to accomplish that large an increase in track width, and body changes would be necessary to cover the wheels. These changes would tend to narrow the size distinction between compact and standard SUVs. Similarly, lower c.g. heights reduce ground clearance and possibly the size of objects that may be hauled. Vehicles actually designed for off-road driving where narrow width and high ground clearance is necessary would be eliminated by minimum requirements for TTA, SSF or CSV found to have even modest benefits. Compact SUVs with enough ground clearance to negotiate roads with unplowed snow would likely have to be redesigned for greater width.

The agency decided instead to pursue a consumer information program to enable consumers to make informed choices about the tradeoffs in vehicle attributes, such as high ground clearance, and rollover resistance. It would inform drivers of the general difference in rollover resistance between light trucks and cars and among vehicles within the various classes. Consumers who need or desire a particularly high cargo space or off-road driving adaptations such as a large amount of ground clearance and narrow track width would not be denied the chance to purchase such vehicles. However, consumers who choose vehicles with relatively low rollover resistance would do so with knowledge of that fact, something that is not true today. The consumer information program would also inform drivers who choose vehicles with less rollover resistance that their risk of harm can be greatly reduced with seat belt use to avoid ejection. In addition, NHTSA believes that a consumer information program would serve as a market incentive to manufacturers in striving to design new vehicles with greater rollover resistance.

As explained above, NHTSA has previously decided that it will not set a vehicle rollover standard at a level that would effectively force nearly all light trucks to be redesigned to be more like passenger cars (in the 1987 denial of the Wirth petition, 52 FR 49033). NHTSA has also previously decided that we will not set a vehicle rollover standard at a level that would effectively force a redesign of some vehicle types like small pickups and small sport utility vehicles (in the 1994 termination of rulemaking to establish a minimum vehicle standard for rollover resistance based on TTA or CSV, 59 FR 33254). Even though we cannot justify prohibiting the manufacture and sale of these vehicles, we are now proposing to provide the public with accurate and meaningful information about the rollover resistance of these vehicles and allowing the public to make fully informed choices when selecting a new vehicle.

Some have previously argued that NHTSA cannot and should not provide consumer information about the relative performance of vehicles until the agency has first established a minimum performance standard for performance in that area. The implicit underpinning of this argument is that the American public deserves the protection of a minimum performance standard if NHTSA can show that performance in an area is sufficiently related to on-road safety performance. Only after the agency has established a minimum performance standard, according to this argument, can NHTSA supplement the standard with consumer information if additional measures are needed.

Whatever the merits of this position generally, NHTSA does not find this argument persuasive in the context of light vehicle rollover. Following this

position, NHTSA must devote time and resources to establish a minimum standard for SSF. Given the agency's previous conclusions about standards that eliminate classes of light trucks, the standard would likely be set at a level that would not effectively eliminate recognized vehicle types. Thus it would have to be set at a level that small pickups and small SUVs could meet. Such a standard would have extremely small benefits. After the rulemaking for this minimal-benefit standard was complete, NHTSA could then try to develop a meaningful consumer information program along the lines laid out in this request for comments. The effect of the minimal-benefit rulemaking appears to be primarily to delay giving the American public meaningful rollover information. However, commenters who advocate this approach are invited to clarify why they believe such an approach is appropriate in the context of rollover and how this approach would serve the safety interests of the American people.

NHTSA agrees that it has a high burden when it proposes to establish a program for relative consumer information in an area where the agency has not established a minimum safety standard. In the case of light vehicle rollover, however, we believe there is a compelling case to provide SSF as consumer information. The physics of SSF and its causal relationship to rollover are indisputable. SSF is not an untried approach that NHTSA has just discovered in some research. Instead, the formula for calculating SSF is well-known and widely-accepted. Each of the manufacturers with which NHTSA has discussed light vehicle rollover said that they know the SSF for each of the vehicles they manufacture. The correlation of SSF to rollovers per single vehicle crash is remarkably robust in an area as complex as rollover, as detailed in the Appendix to this notice. When the science suggests a causal relationship between a vehicle metric and a safety problem, real world data confirm that relationship, the metric that will be provided as consumer information is already in general use by the industry, and can be repeatably measured at different facilities, we believe that information ought to be shared with the American people to allow them to make informed purchase decisions *regardless* of whether the vehicle metric is also part of a minimum safety standard. Again, public comment is requested on this position.

VII. Consumer Information Presentation

A. How Consumers Want To See Information Displayed

Eighty percent of respondents to a 1997 NHTSA survey felt that comparative safety ratings of motor vehicles should be available to the public. Therefore, we assume that consumers would be interested in comparative rollover information. In April 1999, we conducted a series of six focus groups to examine ways of presenting comparative rollover information. Two focus groups were conducted in each of three locations: Dallas, Texas; Overland Park, Kansas (a suburb of Kansas City); and Richmond, Virginia.

Our study found that:

- Participants underestimated the size of the rollover problem and were surprised when informed of the actual size.
- Participants enthusiastically supported the idea of having rollover information available in both point-of-purchase (label) and brochure formats.
- Among the options presented, participants were most comfortable with ratings based on stars.
- Participants also agreed that a graphic showing a tilted car would be the clearest in conveying the message of rollover and would have the most impact on purchasers.

We have placed the complete focus group report in the docket for interested parties. While the focus group results support use of either stars or a tilting vehicle graphic to represent the ratings, NHTSA is considering the use of stars. Stars are already used for the front and side NCAP ratings, and thus use of stars for rollover would be consistent.

B. Converting SSF Measurements to Star Ratings

Since the consumer focus groups recommended a simple representation of comparative risk using stars, we have devised a procedure to rank vehicles for rollover risk and assign stars based on the statistical study described in the Appendix, which estimated the relationship between the SSF of a vehicle and the incidence of rollover in single-vehicle crashes (82 percent of rollover crashes are single-vehicle crashes).

To repeat, any vehicle can be made to roll over if it strikes an effective tripping mechanism at a great enough lateral speed. The combinations of conditions in real-world single-vehicle crashes are limitless. Some conditions are so severe that any vehicle would roll, and others would not trip even the least stable vehicle. Nevertheless, when a statistical sample of real-world crashes is taken, it is clear that vehicles with a low SSF roll over more frequently than those with a high SSF despite the unique circumstances of individual crashes. The observed rollover rate for a particular make/model in the statistical study was not included unless it was based on at least 25 single-vehicle crashes in a particular state, and it received less weighting unless it was based on at least 250 single-vehicles crashes in that state. Likewise, the adjustment of individual vehicle rollover rates to a common demographic base in estimating the risk relationship with SSF was a step to reduce the influence of the variety of conditions in single-vehicle crashes.

The result of the study was an equation relating the SSF to the estimated number of rollovers per single-vehicle crash, after accounting for differences in driver, road and environmental factors. This estimate of rollovers per single-vehicle crash represents the risk of rollover given a single-vehicle crash:

$$\text{Estimated rollovers per single-vehicle crash} = 13.25 * e^{(-3.3731 * SSF)}.$$

The computation of SSF at meaningful increments of estimated rollover risk, using this equation, offers a basis for a star rating. The risk of rollover indicated by the star rating pertains to the likelihood of rollover in the event of a single vehicle crash of sufficient severity to cause a police report. It broadly estimates the risk, per event, of a single vehicle crash becoming a rollover; it is not a measure of the risk of rollover over the life of the vehicle. We are defining the rating intervals as follows:

ONE STAR (★): Risk of Rollover 40 percent or greater is associated with SSF 1.04 or less.

TWO STARS (★★): Risk of Rollover greater than 30 percent but less than 40 percent is associated with SSF 1.05 to 1.12.

THREE STARS (★★★): Risk of Rollover greater than 20 percent but less than 30 percent is associated with SSF 1.13 to 1.24.

FOUR STARS (★★★★): Risk of Rollover greater than 10 percent but less than 20 percent is associated with SSF 1.25 to 1.44.

FIVE STARS (★★★★★): Risk of Rollover less than 10 percent is associated with SSF 1.45 or more.

The relationship between SSF and rollovers per single vehicle crash which is reflected in the star ratings above was derived by the statistical method described in the Appendix to best

estimate the national trend between rollover risk and SSF. The relationship appears to be constant over the four years of state crash data analyzed, but the agency intends to continue to monitor it as newer crash data becomes available. Should changes in road conditions, demographics, or vehicles alter the relationship, the levels of risk associated with the star ratings would be adjusted.

The rollover ratings should be distinguished from the frontal and side crash star ratings. The present star ratings are measures of the crashworthiness of the body structure and restraint systems of a vehicle in the event of a frontal or side crash. The rollover risk rating does not pertain to the crashworthiness of the vehicle in a rollover crash. Instead, it estimates the likelihood that a rollover will occur in the event of a single vehicle crash. The majority of rollovers occur in single vehicle run-off-the-road crashes, and the majority of deaths in rollover crashes are the result of ejection from the vehicle. The frontal and side crash ratings are direct estimates of the probability of serious injury in those types of crashes. The rollover star rating will estimate the probability of a single vehicle crash becoming a rollover, but the probability of a serious or fatal injury in a rollover depends heavily on the occupant's decision to protect himself or herself against ejection through the use of seat belts.

Like frontal and side NCAP ratings, the rollover rating is concerned with vehicle attributes that affect the outcome of a crash. None of the ratings attempt to describe the probability of a vehicle's involvement in crashes in the first place. It can be argued that vehicles with anti-lock brakes are less likely to have frontal crashes, but that possibility does not alter the frontal crashworthiness star rating. Likewise, it may be argued that short wheelbase vehicles are more likely to be involved in single vehicle run-off-the-road crashes, but that possibility would not alter the star rating of the probability of a rollover given the event of a single vehicle crash. Stability control and other advanced vehicle systems are being developed to reduce the instances of loss of control which can cause run-off-the-road crashes. However, such advanced systems would not affect the probability of rollover in those single vehicle run-off-the-road crashes still occurring even with those systems, and would not affect the rollover star rating given a vehicle. While the effectiveness of stability control technology in crash reduction is presently unproven, its potential is of great interest. If stability control technologies are proven to have a significant effect on the exposure of vehicles to off-road crashes, we would consider adding information about the equipment to the presentation of the rollover information. Commenters are invited to share any data they may have on the effectiveness of these stability control technologies in preventing single vehicle crashes.

Of course, as in all NCAP information, the numerical measurements as well as the star interpretation of risk would be available to consumers. The NAS study recommended that NHTSA provide consumer information in a hierarchy of detail, so consumers can find information at the level they are comfortable with. In addition, various focus groups have suggested that making the more detailed information available increases consumer confidence in the ratings, even if the consumer does not actually use the information.

VIII. Rollover Information Dissemination Through NCAP

A. Why NCAP Rather Than Vehicle Labeling?

In the 1994 NPRM the agency proposed a consumer information regulation for rollover. The proposal called for each new vehicle to be labeled with information about its rollover resistance and information about the range of rollover resistance for cars and light trucks. This regulation would have mandated participation of the vehicle manufacturers. The testing and labeling would have been done by the manufacturers, and associated costs borne by them. Manufacturers would have been required to report a rollover resistance metric (TTA and CSV were discussed in the proposal) for each make/model to NHTSA by January 1 of each year. Manufacturers would decide how to group vehicle models for reporting. NHTSA would mandate a specific test procedure and accuracy tolerance for reported data, to prevent either over- or understatement of the rollover metric. NHTSA would then receive and process the information reported by the manufacturers to provide the manufacturers with the ranges of metrics for cars and for light trucks by April 1.[20]

By September 1 each year all new vehicles would have been required to have a window sticker showing this rollover information. Again, the format, location, and language of the label would have been set forth by regulation. The regulation would also have required specific information about rollover to appear in each vehicle owner's manual.

The agency estimated, in 1994, that the costs to manufacturers associated with this mandatory program would be between 3.93 and 6.35 million dollars, depending on which specific vehicle metric was required. These costs would come from generating the metric for the labels, printing the labels and affixing the labels to the vehicles.

The advantage of a vehicle labeling requirement is that the information is provided to all consumers without the need to ask for it. This advantage was reflected in the focus group study. However, the labeling of vehicles with one safety attribute to the exclusion of others may be misleading. Also, using a label listing a single-vehicle safety attribute would be contrary to the principles of the NAS study on consumer information that the agency was directed to consider. That 1996 study recommended the development of an overall measure of vehicle safety. Until that goal can be met, the presentation of our proposed measure of rollover risk, in the context of our established measures of frontal and side impact crashworthiness in NCAP, would, in our opinion, go a long way toward addressing NAS's concern for presenting overall vehicle safety. It also provides some practical advantages:

- Implementation would be faster. The program would be able to start almost immediately, so consumers would have the information sooner.
- NHTSA retains control of vehicle measurement so the consumer will know exactly which vehicle model/equipment combination was tested.
- It takes advantage of the existing NCAP organization within NHTSA equipped to perform vehicle tests and disseminate consumer information and avoids the need for a compliance function within NHTSA to collect and process manufacturers' test reports and provide to manufacturers the vehicle ranges required on the labels.

While we believe NCAP is the most immediate, inexpensive, and efficient way to get rollover information to the consumer, we would like to receive comments from the public on the merits of this type of program as compared to labeling individual vehicles so that consumers receive the information at the point of sale. NHTSA, in partnership with AAA, distributes approximately 600,000 Buying a Safer Car brochures annually. Buying a Safer Car provides NCAP ratings and other safety feature

[20] Under this proposal the actual measurement, not a star ranking, would have been reported on the label, along with the range of data from all manufacturers for cars and for light trucks, so the consumer could see where each vehicle fell in range of available choices.

information for new models. In addition, NHTSA gets approximately 22,000 visitors per week (or approximately a million visitors a year) to the web site location for the NCAP ratings.

B. Addition of Rollover Stability Stars to NCAP

The agency has tentatively decided to go forward with a pilot consumer information program on vehicle rollover resistance, using the SSF as a basis for the rating system. This program would be part of NCAP, which currently gives consumers information on frontal and side-impact crashworthiness. We hope to have the pilot rollover information program ready for the 2001 model year.

The rollover information program would operate very much as the current NCAP does today. New models would be selected for testing before the beginning of the model year. Selection would be based primarily on production levels predicted by the manufacturers and submitted to the agency confidentially. Consideration would also be given to vehicles scheduled for major changes, or new models with specific features that may affect their SSF's. The vehicles chosen for NCAP testing would be procured and measured by NHTSA as the vehicles become available. Vehicles would be procured with popular equipment, typical of a rental fleet, and the equipment with possible influence on SSF would be included in the vehicle description. Two wheel drive and four wheel drive versions of a vehicle would be treated as separate models because a four wheel drive option can have a significant effect on SSF. As provided for in the present NCAP, manufacturers can, at their option, pay for tests of vehicles, models or configurations not included in NHTSA's test plan if they wish to inform consumers through the program. (Vehicle purchase and testing is done by a NHTSA-approved testing laboratory.) The SSF would be converted to a ''star'' rating according to the curve presented earlier. The rollover ''star'' information would be published by NHTSA and placed on the agency's web site. The brochures and the web site presentation would explain the basis of the ratings, make available the SSF measurements, and discuss the magnitude of rollover harm prevention provided by safety belt use.

As part of the presentation on rollover in NHTSA brochures and on our web site, we will include explanatory language for consumers. The following two paragraphs are illustrative of the information that would be presented:

Rollover is a very complex event, heavily influenced by driver and road characteristics as well as the design of the vehicle. Most rollovers occur when a single vehicle runs off the road and is tripped by a ditch, soft soil, a curb or other object. The speed at which the vehicle leaves the roadway is always important to the risk of rollover. The NCAP rating is based on Static Stability Factor, essentially a measure of how ''top heavy'' a vehicle is. Static Stability Factor can be used to predict the risk of rollover in the real world. In fact, a statistical study of 185,000 single vehicle crashes in six states involving 100 popular vehicle models confirmed Static Stability Factor's relationship to the actual occurrence of rollover crashes. Vehicles with greater Static Stability Factors are less ''top heavy'' and are awarded more stars in proportion to their reduced risk of rollover in the event of a single-vehicle crash.

Regardless of vehicle choice, the consumer and his or her passengers can reduce their risk of being killed in a rollover crash dramatically by simply using their seat belts. Seat belt use has an even greater effect on reducing the deadliness of rollover crashes than on other crashes because so many victims of rollover crashes die as a result of being partially or fully thrown from the vehicle. NHTSA estimates that belted occupants are about 75% less likely to be killed in a rollover crash than unbelted occupants.

IX. Rulemaking Analyses and Notices

Executive Order 12866

This request for comment was not reviewed under Executive Order 12866 (Regulatory Planning and Review). NHTSA has analyzed the impact of this request for comment and determined that it is not a ''significant regulatory action'' within the meaning of Executive Order 12866. The agency anticipates that providing information on rollover risk under NHTSA's New Car Assessment Program would impose no regulatory costs on the industry.

X. Submission of Comments

A. How Can I Influence NHTSA's Thinking on This Document?

In developing this document, we tried to address the concerns of all our stakeholders. Your comments will help us improve this notice. We invite you to provide different views on options we propose, new approaches we have not considered, new data, how this document may affect you, or other relevant information. We welcome your views on all aspects of this document, but request comments on specific issues throughout this document. We grouped these specific requests near the end of the sections in which we discuss the relevant issues. Your comments will be most effective if you follow the suggestions below:

- Explain your views and reasoning as clearly as possible.
- Provide solid technical and cost data to support your views.
- If you estimate potential costs, explain how you arrived at the estimate.
- Tell us which parts of this document you support, as well as those with which you disagree.
- Provide specific examples to illustrate your concerns.
- Offer specific alternatives.
- Refer your comments to specific sections of this document, such as the units or page numbers of the preamble, or the regulatory sections.
- Be sure to include the name, date, and docket number with your comments.

B. How Do I Prepare and Submit Comments?

Your comments must be written and in English. To ensure that your comments are correctly filed in the Docket, please include the docket number of this document in your comments.

Your comments must not be more than 15 pages long. (49 CFR 553.21). We established this limit to encourage you to write your primary comments in a concise fashion. However, you may attach necessary additional documents to your comments. There is no limit on the length of the attachments.

Please submit two copies of your comments, including the attachments, to Docket Management at the address given above under **ADDRESSES.**

Comments may also be submitted to the docket electronically by logging onto the Dockets Management System website at http://dms.dot.gov. Click on ''Help & Information'' or ''Help/Info'' to obtain instructions for filing the document electronically.

C. How Can I Be Sure That My Comments Were Received?

If you wish Docket Management to notify you upon its receipt of your comments, enclose a self-addressed, stamped postcard in the envelope containing your comments. Upon receiving your comments, Docket Management will return the postcard by mail.

D. How Do I Submit Confidential Business Information?

If you wish to submit any information under a claim of confidentiality, you should submit three copies of your complete submission, including the information you claim to be confidential business information, to the Chief Counsel, NHTSA, at the address given above under **FOR FURTHER INFORMATION**

CONTACT. In addition, you should submit two copies, from which you have deleted the claimed confidential business information, to Docket Management at the address given above under **ADDRESSES**. When you send a comment containing information claimed to be confidential business information, you should include a cover letter setting forth the information specified in our confidential business information regulation. (49 CFR Part 512.)

E. Will the Agency Consider Late Comments?

We will consider all comments that Docket Management receives before the close of business on the comment closing date indicated above under **DATES**. To the extent possible, we will also consider comments that Docket Management receives after that date. If Docket Management receives a comment too late for us to consider it in developing a final rule (assuming that one is issued), we will consider that comment as an informal suggestion for future rulemaking action.

F. How Can I Read the Comments Submitted by Other People?

You may read the comments received by Docket Management at the address given above under **ADDRESSES**. The hours of the Docket are indicated above in the same location.

You may also see the comments on the Internet. To read the comments on the Internet, take the following steps:

(1) Go to the Docket Management System (DMS) Web page of the Department of Transportation (http://dms.dot.gov/).

(2) On that page, click on ''search.''

(3) On the next page *(http://dms.dot.gov/search/)*, type in the four-digit docket number shown at the beginning of this document. Example: If the docket number were ''NHTSA–1998–1234,'' you would type ''1234.'' After typing the docket number, click on ''search.''

(4) On the next page, which contains docket summary information for the docket you selected, click on the desired comments. You may download the comments. Although the comments are imaged documents, instead of word processing documents, the ''pdf'' versions of the documents are word searchable.

Please note that even after the comment closing date, we will continue to file relevant information in the Docket as it becomes available. Further, some people may submit late comments. Accordingly, we recommend that you periodically check the Docket for new material.

G. Plain Language

Executive Order 12866 and the President's memorandum of June 1, 1998, require each agency to write all rules in plain language. Application of the principles of plain language includes consideration of the following questions:

- Have we organized the material to suit the public's needs?
- Are the requirements in the rule clearly stated?
- Does the rule contain technical language or jargon that is not clear?
- Would a different format (grouping and order of sections, use of headings, paragraphing) make the rule easier to understand?
- Would more (but shorter) sections be better?
- Could we improve clarity by adding tables, lists, or diagrams?
- What else could we do to make the rule easier to understand?

If you have any responses to these questions, please include them in your comments on this document.

Issued on: May 24, 2000.

Stephen R. Kratzke,

Associate Administrator for Safety Performance Standards.

Appendix: Association Between SSF and Rollover Risk Estimated From Crash Data

A. Purpose of the Analysis

Our purpose is to describe the relationship between the Static Stability Factor (SSF) and the risk of rollover in single-vehicle crashes given the average mix of road use characteristics nationwide. We know that environmental, road, and driver factors affect rollover risk, and we suspect that vehicles with low SSFs may tend to be used differently than vehicles with high SSFs. (Another way to describe this is to say that SSF may be confounded with road use characteristics.) For example, some vehicles with a low SSF may tend to be used on curved roads or by young drivers, and these may be conditions that increase rollover risk. Therefore, our description of the association between the SSF and rollover risk will be no better than our ability to remove the confounding effects of differences in road use.

B. Data Availability

To compare the performance of different vehicle models, we need a large number of single-vehicle crashes. The National Automotive Sampling System (NASS) provides good data, but NASS is limited to towaway crashes and includes too few cases for this type of analysis. The Fatality Analysis Reporting System (FARS) includes a large number of cases, but the restriction to fatal crashes limits its use for comparisons of rollover propensity. The General Estimates System (GES) includes a large number of cases of all crash severities, and these data will be valuable when used in conjunction with the larger volume of cases available in the state crash files.

The agency routinely obtains crash files from seventeen states as part of its State Data System (SDS). We questioned whether a single state could represent the national experience (given state-to-state differences in road use and reporting practices), so we decided to use as many states as possible. This allowed us to compare the results among states and to combine the results to produce our best national estimate of the relationship between the SSF and rollover risk. Participants in the SDS include nine states that have the Vehicle Identification Number (VIN) on their crash files; we will call them the ''VIN states'' here. We need the VIN to completely and accurately describe the vehicle, and this is an essential part of our analysis. We eliminated three VIN states: Illinois (because we have not yet obtained the 1996 and 1997 data from this state) and New Mexico and Ohio (because we know that a rollover is recorded in these states only if the police identify it as the first harmful event in the crash). The 1994–1997 calendar year files for the other six VIN states in the SDS (Florida, Maryland, Missouri, North Carolina, Pennsylvania, and Utah) are the basis of our analysis. We used GES to verify and calibrate the results obtained from the six state files, but these six states include 26 times as many cases as GES alone.

C. Determination of the SSF

The main criterion for selecting the vehicles used in this analysis was the availability of a reasonable estimate of the SSF, and our goal was to include as many vehicle models as possible. We started with an existing compilation of all the SSF measurements made by the agency through 1998, but limited the study vehicles to model years 1988 and later. We added measurements provided by the General Motors Corporation (GM) for other vehicles, but we limited these additions to passenger cars and vans because the GM data did not distinguish between two- and four-wheel drive versions of pickup trucks and sport utility vehicles. We used data from vehicles tested with a single passenger when these were available, and from zero- or two-passenger loading when one-passenger loading was not available. A handful of SSF values were imputed, as in the following example: We assigned a late-generation four-wheel drive S-series Blazer (model years 1995 to 1998, for which we had no SSF measurement) the same SSF as the two-wheel drive version because there was no difference in the SSF between the two- and four-wheel drive versions in the earlier generation of that model (model years 1983 to 1994).

The result was a list of a hundred vehicle models (vehicle models tested by the agency, identified by GM, or imputed as described above). The list includes the following number of vehicle models for each of four light vehicle types: 36 cars, 30 sport utility vehicles, 13 vans, and 21 pickup trucks. The number of vehicle models in the study (a

hundred) is a nice round number, but this was not by design. Our goal was to include as many models as possible, and one hundred was the number that was possible.

D. Data Processing

We identified vehicles for which we had a SSF value (including corporate cousins of the tested vehicles) in the state and national crash files based on the VIN and with the help of the 1998 version of The Polk Company's PC VINA® software. The list of vehicle models used in the analysis is shown as Tables A–1 through A–4; note that some vehicle groups include more than one vehicle model because the tested vehicles had corporate cousins. We restricted the crash data to single-vehicle events, which we defined to exclude crashes with another motor vehicle in transport or with a nonmotorist (such as a pedestrian or pedalcyclist), animal, or train. We eliminated any vehicle without a driver and all vehicles that were parked, pulling a trailer, designed for certain special or emergency uses (ambulance, fire, police, or military), or on an emergency run at the time of the crash.

All the files we used include variables that describe the conditions of the road and driver, and these are useful for understanding the risk of rollover. A detailed review of the agency's GES and SDS documentation showed that the following information is available for most of the six states and for GES. The name of the variable created from this information is shown in capital letters, in parentheses:

(1) Did the vehicle roll over? (ROLL)

(2) Was it dark when the crash occurred? (DARK)

(3) Was the weather inclement? (STORM)

(4) Did the crash occur in a rural area? (RURAL)

(5) Was the speed limit 50 mph or greater? (FAST)

(6) Did the crash occur on a grade, dip, or summit? (HILL)

(7) Did the crash occur on a curve? (CURVE)

(8) Were there potholes or other bad road conditions? (BADROAD)

(9) Was the road wet or icy or have another bad surface condition? (BADSURF)

(10) Was the driver male? (MALE)

(11) Was the driver under 25 years old? (YOUNG)

(12) Was the driver uninsured? (NOINSURE)

(13) Was drinking or illegal drug use noted for the driver? (DRINK)

(14) How many occupants were in the vehicle? (NUMOCC)

For each state and GES, we calculated the following summary statistics for each of the hundred vehicle groups in the study:

(1) Number of single-vehicle crashes during these four years;

(2) Number of rollovers per single-vehicle crash;

(3) Involvement of the following per single-vehicle crash (as available on each file): DARK, STORM, RURAL, FAST, HILL, CURVE, BADROAD, BADSURF, MALE, YOUNG, NOINSURE, and DRINK; and

(4) Average number of occupants per vehicle in these crashes.

We used these summary-level data (summarized as counts and averages per vehicle group) as the basis for our analysis. Each summary record, representing a vehicle model group, is a data point in our linear regressions.

E. State-by-State Data Analysis

For each state, we limited the analysis to vehicle groups with at least 25 single-vehicle crashes. This threshold is somewhat arbitrary, but it is the one we used in an earlier analysis of single-vehicle crashes in state data.[21] There are two valuable results: (1) There is at least one rollover for each vehicle group included in the model, and (2) there is no vehicle group for which every single-vehicle crash resulted in a rollover. That is, the rollover rate is greater than zero and less than one for every vehicle group we included in the study. We could have had as many as 600 data points (six states, each with up to 100 vehicle groups) for this analysis. We actually had (because of the threshold for inclusion) 481 data points, which represent the experience of 184,726 single-vehicle crashes. A similar restriction on the GES data file produced 60 data points representing the experience of 7,022 vehicles. The number of vehicle groups available for our analysis and the total number of single-vehicle crashes represented by these groups are shown in the first two data rows of Table A–5.

The number of rollovers per single-vehicle crash varies by state (from a low of 0.127 for Missouri to a high of 0.363 for Utah). There are two major reasons for this variation: (1) Real differences among the states in road conditions, vehicles, and drivers, and (2) state-to-state reporting differences (and, in particular, the conventions for reporting nonrollover, nontowaway crashes). However, it is encouraging that the average number of rollovers per single-vehicle crash for the study vehicles was 0.198 for the six states combined, which is the same as the proportion estimated from GES for the same vehicles and time period.

We performed a number of stepwise linear regressions (using forward variable selection and a significance level of 0.15 for entry and removal from the model) on the individual states as preparation for an analysis of the six states combined. In each case, we modeled the natural logarithm of the number of rollovers per single-vehicle crash, LN(ROLL), as a function of a linear combination of the road, vehicle, and driver variables available in that state's crash file. We chose this transformation for three reasons: (1) A visual inspection of the data suggested that this form describes the relationship between rollover risk and the SSF better than a simple linear fit, (2) this form was consistent with our understanding of the process (we expected the biggest differences in the number of rollovers per single-vehicle crash to occur at relatively low values of the SSF, with diminishing effects for higher values of the SSF), and (3) this transformation has convenient mathematical properties. The form of the model implies that arithmetic changes in the SSF (for example, an additional 0.01 in the value) are associated with geometric changes in the number of rollovers per single-vehicle crash (about 3 percent fewer rollovers observed per single-vehicle crash for any 0.01 increase in the SSF, before accounting for differences in road use).

We ran stepwise regression models using the option that gives more weight to data points that are based on more observations, so vehicle groups with more crashes count for more in the analysis. Each data point was weighted by the number of single-vehicle crashes it represented, but the weighting was capped at 250. That is, data points based on more than 250 observations were weighted by 250. The weighting threshold is somewhat arbitrary, but it was chosen because it is 10 times the threshold for inclusion in the analysis. The rationale for weighting the data for the regression is that data points based on more observations are more reliable; the rationale for capping the weights is that at some point there are only marginal improvements in our estimates, and we want estimates that fit well over the entire range of the data (that is, for low-SSF and for high-SSF vehicles).

Florida can be used to illustrate our procedure. There are 85 vehicle groups available for our analysis, which represent the experiences of 34,521 vehicles in single-vehicle crashes during 1994-1997. There were 0.208 rollovers per single-vehicle crash in these data. A weighted linear regression of LN(ROLL) as a function of the SSF alone has an R-squared of 0.7074, which means that the SSF alone explains 71 percent of the variability in the data. This suggests that the SSF has great explanatory power for the number of rollovers per single-vehicle crash, but we are concerned that differences among vehicle groups in the mix of road use characteristics may be confounding the relationship. Therefore, we also used more-complex models that explicitly include these potentially confounding factors.

A weighted linear regression using a stepwise approach to include the best of the road use variables alone (that is, without the SSF) produced an equation with an R-squared of 0.5313. A second weighted linear regression using a stepwise approach to include the best of the road use variables plus the SSF produced an equation with an R-squared of 0.9041. The variability unexplained by the first model is:

$1 - 0.5313 = 0.4687$ (without the SSF),

and the variability unexplained by the second model is:

$1 - 0.9041 = 0.0959$ (with the SSF).

This means that 80 percent of the variability in the data remaining after the effects of the best of the road use variables are used is eliminated by allowing the SSF to enter the stepwise procedure. This is calculated as:

$(0.4687 - 0.0950)/0.4687 = 0.80.$

We consider 80 percent to be the value of the SSF in explaining the number of rollovers per single-vehicle crash.

We used the results of the model to adjust the observed number of rollovers per single-vehicle crash to account for differences among vehicle groups in their road use

[21] As described in our July 1991, Technical Assessment Paper: Relationship between Rollover and Vehicle Factors.

characteristics in single-vehicle crashes. For each data point, we used the regression results (the coefficients of the explanatory road use variables, FAST, CURVE, MALE, YOUNG, and DRINK) and the typical road use (the observed averages of these road use characteristics for the study vehicles as a group) to estimate what LN(ROLL) would have been if road use for that vehicle group had been the typical road use for all the vehicles in the Florida study. The approach is similar to that described in our July 1991 Technical Assessment Paper. The average adjusted number of rollovers per single-vehicle crash for all the study vehicles in Florida is, by design, 0.208 (that is, the same as the number estimated from the unadjusted data). The line through the adjusted data is described by:

$$LN(ROLL) = 3.1691 - 3.7935 \times SSF.$$

Exponentiating both sides of the equation produces an estimate that the number of rollovers per single-vehicle crash is approximated by the curve described by:

$$ROLL = 23.79 \times e^{(-3.7935 \times SSF)}.$$

This model form has very useful properties.

The equation can be used to estimate the number of rollovers per single-vehicle crash as a function of SSF alone, for the average mix of road use characteristics for the study vehicles in Florida during the years 1994–1997. For example, we can use the statistical model to identify the increase in the SSF that is associated with an estimate of half as many rollovers per single-vehicle crash. Note that our model has the same form as that used to describe radioactive decay as a function of time (with SSF used in place of time as the independent variable). Using the terminology and theory from the physical application, 3.7935 is the decay constant, and the half-life of the process is estimated as:

$$\text{Half-life} = LN(2)/(3.7935) = 0.18.$$

This means that the increase in the SSF that is associated with halving the number of rollovers per single-vehicle crash in Florida is estimated as 0.18. For example, the number of rollovers per single-vehicle crash under average conditions in Florida for the study vehicles as a group is estimated as:

0.40 for a SSF of 1.08
0.20 for a SSF of 1.26, and
0.10 for a SSF of 1.44.

Thus, rollover risk drops by a half when the SSF increases from 1.08 to 1.26, and it drops in half again when the SSF increases from 1.26 to 1.44.

F. Comparison of the State Results

The results for the six individual states and GES are shown in Table A–5. The value of the SSF in explaining rollovers per single-vehicle crash (measured as the decrease in unexplained variability when SSF is allowed to enter the stepwise regression) for the six states ranges from 64 percent for Utah to 80 percent for Florida; the value estimated from GES is 54 percent. The estimated increase in the SSF that is associated with halving the number of rollovers per single-vehicle crash is similar across the six states, ranging from 0.18 (Florida and Missouri) to 0.24 (Pennsylvania and Utah); the value estimated from GES is 0.18.

There are also similarities in which explanatory variables were chosen by the stepwise regression procedure. The best models for the states (the models that include SSF and those road use variables that are most useful in explaining the number of rollovers per single-vehicle crash in each state) include the following variables:

DARK: 2 states,
STORM: 1 state,
RURAL: 2 states (not available in 2 other states),
FAST: 5 states,
HILL: 2 states,
CURVE: 4 states,
BADROAD: 1 state (not available in 2 other states),
BADSURF: 1 state,
MALE: 6 states,
YOUNG: 5 states,
DRINK: 4 states, and
NUMOCC: 2 states (not available in 1 other state).

The similarities among the individual state models suggests that the six states can be combined to form a best estimate of the relationship between the SSF and the number of rollovers per single-vehicle crash if the differences among the states in road use and crash reporting can be addressed. We would not be surprised if a multi-state stepwise regression selected FAST, CURVE, MALE, YOUNG, and DRINK as explanatory variables because these factors are important in the individual state analyses. Note that combining the data from individual states is already done by FARS (a census of traffic fatalities in all states) and by GES (a survey of police-reported crashes in sampled states), and this combination is done without adjustment for differences in reporting practices. Our efforts to model the combined data from the six available VIN states are described below.

G. Combined Six-State Data Analysis

We performed a weighted stepwise linear regression analysis for the six states combined using the 481 data points that represent at least 25 single-vehicle crashes, with the weighting capped at 250. These 481 data points represent the experience of 184,726 single-vehicle crashes in the six-state combined data, including the following number of data points for each of four light vehicle types:

204 for cars,
124 for sport utility vehicles,
45 for vans, and
108 for pickup trucks.

The road use variables considered by the model were those that are available in all six states: DARK, STORM, FAST, HILL, CURVE, BADSURF, MALE, YOUNG, and DRINK.

We modeled LN(ROLL) as a function of these road use variables, and we created five dummy variables (DUMMY__FL, DUMMY__MD, DUMMY__NC, DUMMY__PA, and DUMMY__UT) to capture state-to-state differences. We needed dummy variables to combine the state data because the states have different reporting thresholds and practices, which produce different levels of rollovers per single-vehicle crash even after accounting for differences in road use. We chose Missouri as the baseline state for two reasons. First, Missouri has the lowest rollover rate (both before and after accounting for differences in road use), and this means that the coefficients of all the state dummy variables will be positive; this makes the results a little easier to describe, but it has no analytical implications. And second, there are significant differences between Missouri and each of the other five states in the number of rollovers per single-vehicle crash; this allows all five state dummy variables to enter the model and lets us measure the relative reporting effect of every state.

For example, the dummy variable DUMMY__FL was defined as ''one'' for each of the 85 Florida data points, and it was defined as ''zero'' for each of the 396 data point from the other five states. The coefficient of DUMMY__FL estimated by the regression analysis is interpreted as the incremental risk of rollover in Florida (compared to Missouri, the baseline state), after considering differences in road use. The other four dummy variables were handled analogously. All five dummy variables were defined as ''zero'' for all the Missouri data points.

The best model without SSF has an R-squared of 0.5753, and the best model with SSF has an R-squared of 0.8829. This means that allowing the SSF to enter the model explains 72 percent of the variation that was not explained by the model without SSF, and so we say that the value of the SSF to our model is 72 percent. The stepwise regression procedure with SSF chose three variables that describe the driving situation (DARK, FAST, and CURVE), three variables that describe the driver (MALE, YOUNG, and DRINK), and all five state dummy variables.

We used forward variable selection and a significance level of 0.15 for entry and removal from the model, but only one variable in the best model that included the SSF had a significance level greater than 0.0001 (DARK, at 0.0663). The F-statistic for the model as a whole was 294, and the probability of a value this high by chance alone is less than 0.0001. More details on the fit of the model are included as Table A–6.

The variables FAST, MALE, and YOUNG are unambiguous, and it seems likely that they are consistently reported by all six states (though there are some differences in the rates of missing data). The coding of DARK and CURVE may vary somewhat by state (states may differ in how they code twilight conditions, and states where most roads curve may tend to call a slightly-curved road ''straight''). The coding of DRINK probably differs among the states. The state dummy variables describe systematic differences between states, including differences in the reporting threshold.

We used the results of the model to adjust the observed number of rollovers per single-vehicle crash to account for differences among states and vehicle groups in their road use characteristics in single-vehicle crashes. For each data point, we used the regression results to calculate how many rollovers per single-vehicle crash we would have expected if road use for that vehicle group had been the typical road use for all the vehicles in the study. (The effects of the adjustments on

individual data points are sometimes large. For example, one pickup truck group had 0.46 rollovers per single-vehicle crash in Florida, in part because drivers of this vehicle in Florida tended to be young. If the vehicle had been driven like the average of all the vehicles in the study, we estimate that there would have been 0.35 rollovers per single-vehicle crash. This second number is what we are calling the ''adjusted'' rollover risk.)

The average adjusted number of rollovers per single-vehicle crash for all the study vehicles is, by design, 0.198 (that is, it is the number estimated from both the six-state data and GES). The fit of the curve through the adjusted data is described by:

Estimated rollovers per single-vehicle crash = $13.25 \times e^{(-3.7831 \times SSF)}$.

This is the curve determined from the observed number of rollovers per single-vehicle crash, the results of the weighted regression model, and with an average of 0.198 rollovers per single-vehicle crash for all the vehicles used in the study. Figure A–1 shows the adjusted value of the rollover risk for each vehicle group averaged over all six states and the curve that describes the pattern of rollover risk as a function of the SSF. Our national estimate of the number of rollovers per single-vehicle crash declines by half for any increase of 0.21 in the SSF.

H. Discussion

The observed relationship between the SSF and the number of rollovers per single-vehicle crash is confounded by (1) The relationship between the SSF and road use factors that directly affect the risk of rollover and (2) state-to-state differences in reporting practices, including the reporting threshold. We attempted to correct for these biases in order to isolate the effect of the SSF on rollover risk, and the curve through the adjusted data is our best estimate of the relationship between the SSF and the risk of rollover. The fit of the model (an R-squared of 0.88), the significance of the SSF in the model (the probability of a greater value of the t statistic is less than 0.0001), the value of the SSF in this model (a 72 percent reduction in the R-squared compared to the best model without the SSF), and the implications from the model (rollovers decrease by half for any increase of 0.21 in the SSF) suggest a strong relationship between the SSF and rollover risk. However, this (in common with all statistical models) is a simplification of a complex process.

There are important factors that were not included in the model because they are not available on the state data files. Some of the unmeasured factors that may influence rollover risk include driver skill (including attitudes, habits, and experience) and after-market changes to the vehicle's SSF (including those caused by differences in tire inflation, vehicle loading, and wheel size). None of these factors was explicitly included in the analysis, but some of them may be included through their association with other, measured variables. For example, differences in driver skill as a function of vehicle group are captured to the extent that driver skill is a function of age (as measured by YOUNG).

Statistical models are a method for dealing with uncertainty. The results can suggest an underlying process, but they do not (except in the most trivial cases) produce deterministic predictions. For example, Figure A–1 shows some scatter around the fitted curve. This may reflect omitted variables, the effect of having only a few vehicle groups at each level of the SSF, or the effects of natural statistical variability (reflecting, in part, sample size limitations). We can put this unexplained variability in perspective, and we will use Florida for illustrative purposes.

Figure A–2 shows the Florida data adjusted to the typical road use for all vehicles in the study. (The amount of scatter in the Florida data appears similar to that for the average of the six states shown in Figure A–1.) The natural variability in the data is suggested by how much the rollover risk for a single vehicle group varies from year-to-year. Figure A–3 shows the number of rollovers per single-vehicle crash (calculated directly from the Florida data, without any adjustments for confounding factors) for each vehicle group for two calendar year groups: 1994–1995 versus 1996–1997. For this purpose, the data were limited to vehicle groups that had at least 25 single-vehicles crashes in both time periods. The line fit to these data (weighting each vehicle group by the number of single-vehicle crashes in Florida during these four years, with the weighting capped at 250) has an R-squared of 0.89 and the equation:

Rollover risk in 1996–1997 = 0.0111 + 0.946 × Rollover risk in 1994–1995.

That is, our model of rollover risk as a function of SSF across vehicle groups seems to fit the data about as well as a model of year-to-year changes for each vehicle group, which seems like a reasonably good fit for such a complex process.

TABLE A–1.—THE SSF FOR PASSENGER CARS

Vehicle group	Make/model	Model years	SSF
1	Dodge Neon, Plymouth Neon	95–98	1.44
2	Ford Crown Victoria	92–97	1.42
3	Ford Escort	91–96	1.38
4	Ford Escort, Mercury Tracer	97–98	1.37
5	Ford Mustang	88–93	1.38
6	Ford Probe	93–97	1.41
7	Ford Taurus, Mercury Sable	88–95	1.45
8	Lincoln Town Car	90–96	1.44
9	Buick Century, Chevrolet Celebrity, Oldsmobile Cutlass Ciera/Ciera, Pontiac 6000	88–96	1.38
10	Buick Regal, Pontiac Grand Prix	88–96	1.41
11	Chevrolet Lumina	95–98	1.34
12	Buick Lesabre, Pontiac Bonneville	92–96	1.39
13	Buick Park Avenue, Oldsmobile 98	91–96	1.38
14	Buick Skylark/Somerset, Oldsmobile Cutlass Calais/Calais, Pontiac Grand Am	88–91	1.35
15	Buick Skylark, Oldsmobile Achieva, Pontiac Grand Am	92–97	1.38
16	Chevrolet Camaro, Pontiac Firebird	88–92	1.53
17	Chevrolet Camaro, Pontiac Firebird	93–98	1.50
18	Buick Roadmaster, Chevrolet Caprice	91–96	1.40
19	Buick Skyhawk, Chevrolet Cavalier, Pontiac Sunbird	88–94	1.32
20	Chevrolet Corsica	88–96	1.30
21	Chevrolet Geo Metro, Suzuki Swift	89–94	1.32
22	Chevrolet Geo Metro, Suzuki Swift	95–98	1.29
23	Saturn SL	90–95	1.39
24	Saturn SL	96–98	1.35
25	Chevrolet Geo Prizm	89–92	1.38
26	Honda Civic	92–95	1.48
27	Honda Civic	96–98	1.43
28	Honda Accord	90–93	1.47
29	Mazda Protege	95–98	1.40
30	Nissan Maxima	89–94	1.44

TABLE A–1.—THE SSF FOR PASSENGER CARS—Continued

Vehicle group	Make/model	Model years	SSF
31	Nissan Sentra	91–94	1.46
32	Nissan Sentra	95–98	1.40
33	Toyota Camry	92–96	1.46
34	Toyota Corolla	89–92	1.36
35	Toyota Tercel	91–94	1.41
36	Toyota Tercel	95–98	1.39

TABLE A–2.—THE SSF FOR SUVS

Vehicle group	Make/model	Model years	Drive wheels	SSF
37	Dodge Ramcharger	88–93	4	1.13
38	Ford Bronco	88–96	4	1.13
39	Ford Bronco II	88–90	2	1.04
40	Ford Bronco II	88–90	4	1.04
41	Ford Explorer	91–94	2	1.07
42	Ford Explorer	91–94	4	1.08
43	Ford Explorer	95–98	2	1.06
44	Ford Explorer	95–98	4	1.06
45	Chevrolet S–10 Blazer, GMC S–1500 Jimmy	88–94	2	1.10
46	Chevrolet S–10 Blazer, GMC S–1500 Jimmy	88–94	4	1.10
47	Chevrolet Blazer, GMC Jimmy	95–98	2a1.09	
48	Chevrolet Blazer, GMC Jimmy	95–98	4	1.09
49	Chevrolet V10/K10/K1500 Blazer	88–91	4	1.09
50	Chevrolet K1500 Blazer/Tahoe, GMC Yukon	92–98	4	1.12
51	Chevrolet V1500/V2500 Suburban, GMC V1500/V2500 Suburban	88–91	4	1.10
52	Chevrolet K1500/K2500 Suburban, GMC K1500/K2500 Suburban	92–98	4	1.08
53	Chevrolet Geo Tracker, Suzuki Sidekick	89–98	4	1.13
54	Honda CR–V	97–98	4	1.19
55	Honda Passport, Isuzu Rodeo	91–97	4	1.06
56	Isuzu Trooper	88–91	4	1.02
57	Isuzu Trooper	92–94	4	1.07
58	Jeep Cherokee	88–97	4	1.08
59	Acura SLX, Isuzu Trooper	95–98	4	1.09
60	Jeep Grand Cherokee	93–98	4	1.07
61	Jeep Wrangler	88–96	4	1.20
62	Nissan Pathfinder	88–95	4	1.07
63	Nissan Pathfinder	96–98	4	1.10
64	Suzuki Samurai	88–95	4	1.09
65	Toyota 4Runner	88–96	4	1.00
66	Toyota 4Runner	97–98	4	1.06

TABLE A–3.—THE SSF FOR VANS

Vehicle group	Make/Model	Model years	Drive wheels	SSF
67	Dodge Caravan/Grand Caravan, Plymouth Voyager/Grand Voyager	88–95	2	1.21
68	Chrysler Town & Country, Dodge Caravan/Grand Caravan, Plymouth Voyager/Grand Voyager	96–98	2	1.23
69	Dodge B–150 Ram Wagon	88–98	2	1.09
70	Ford Aerostar	88–98	2	1.10
71	Ford E–150 Clubwagon	88–91	2	1.11
72	Ford E–150 Clubwagon	92–97	2	1.11
73	Ford Windstar	95–98	2	1.24
74	Chevrolet Astro, GMC Safari	88–98	2	1.12
75	Chevrolet Lumina APV, Oldsmobile Silhouette, Pontiac Transport	90–96	2	1.12
76	Chevrolet Venture, Oldsmobile Silhouette, Pontiac Transport	97–98	2	1.18

TABLE A–3.—THE SSF FOR VANS—Continued

Vehicle group	Make/Model	Model years	Drive wheels	SSF
77	Chevrolet G10/G20 Sportsvan, GMC G1500/G2500 Rally van	88–95	2	1.08
78	Mazda MPV	89–97	2	1.17
79	Toyota Previa	91–97	2	1.23

TABLE A–4.—THE SSF FOR PICKUP TRUCKS

Vehicle group	Make/model	Model years	Drive wheels	SSF
80	Dodge Dakota	97–98	2	1.25
81	Dodge Ram 1500	94–98	2	1.22
82	Dodge D–150 Ram	88–93	2	1.28
83	Ford F–150	88–96	2	1.19
84	Ford F–150	88–96	4	1.15
85	Ford F–150	97–98	2	1.18
86	Ford Ranger	88–92	2	1.13
87	Ford Ranger	88–92	4	1.03
88	Ford Ranger, Mazda B-series	93–97	2	1.17
89	Ford Ranger, Mazda B-series	93–97	4	1.07
90	Chevrolet C–1500, GMC C–1500/Sierra	88–98	2	1.22
91	Chevrolet K–1500, GMC K–1500/Sierra	88–98	4	1.14
92	Chevrolet S–10, GMC S–15/Sonoma	88–93	2	1.19
93	Chevrolet S–10, GMC S–15/Sonoma	88–93	4	1.19
94	Chevrolet S–10, GMC S–15/Sonoma, Isuzu Hombre	94–98	2	1.14
95	Chevrolet S–10, GMC S–15/Sonoma	94–98	4	1.14
96	Nissan Pickup	88–97	2	1.20
97	Nissan Pickup	88–97	4	1.11
98	Toyota Pickup	89–94	2	1.23
99	Toyota Pickup	89–94	4	1.07
100	Toyota Tacoma	95–98	2	1.26

TABLE A–5.—ROLLOVERS PER SINGLE-VEHICLE (SV) CRASH AS A FUNCTION OF THE SSF AND ROAD USE VARIABLES

	FL	MD	MO	NC	PA	UT	Six states	GES
Vehicle groups for study	85	81	82	86	86	61	481	60
Single-vehicle crashes	34,521	17,683	31,517	45,440	48,519	7,046	184,726	7,022
Rollovers per SV crash	0.208	0.159	0.127	0.177	0.246	0.363	0.198	0.198
R-squared for models of LN (ROLL) with:								
SSF only	0.7074	0.6072	0.7266	0.5304	0.7281	0.7606	0.5386	0.4456
SSF and state	.....	.....	.....	.....	.....	.....	0.7334	.....
Road use only	0.5313	0.6550	0.5520	0.5479	0.6878	0.5461	.....	0.4147
Road use and state	.....	.....	.....	.....	.....	.....	0.5753	.....
SSF plus road use	0.9041	0.8818	0.8559	0.8945	0.8879	0.8548	.....	0.7332
SSF, road use, and state	.....	.....	.....	.....	.....	.....	0.8829	.....
Value of SSF	80%	66%	68%	77%	64%	68%	72%	54%
Best model of ROLL:								
Intercept	23.79	8.28	15.15	13.53	8.33	11.39	13.25	5.84
Coefficient of SSF	−3.7935	−3.1414	−3.8627	−3.4328	−2.8494	−2.8784	−3.3731	−2.6943
Standard error of coefficient of SSF	0.1729	0.2552	0.2141	0.1798	0.1488	0.2391	0.0761	0.3192
Increase in SSF to halve rollovers per SV crash	0.18	0.22	0.18	0.20	0.24	0.24	0.21	0.18

TABLE A–6.—FIT OF THE MODEL OF ROLLOVERS PER SINGLE-VEHICLE CRASH AS A FUNCTION OF THE SSF AND ROAD USE VARIABLES

[R-square=0.88290867 C(p)=10.21256387]

	DF	Sum of squares	Mean square	F	Prob>F
Regression	12	27480.16301362	2290.01358447	294.07	0.0001
Error	468	3644.41878744	7.78721963		
Total	480	31124.58180106			

Variable	Parameter estimate	Standard error	Type II—Sum of squares	F	Prob>F
INTERCEP	0.98462872	0.19748866	193.57224437	24.86	0.0001
SSF	−3.37314841	0.07612591	15289.32722322	1963.39	0.0001

Variable	Parameter estimate	Standard error	Type II—Sum of squares	F	Prob>F
DARK	−0.38680987	0.21016386	26.37918835	3.39	0.0663
FAST	1.52493695	0.19916920	456.50110043	58.62	0.0001
CURVE	1.55970317	0.25046223	301.98254463	38.78	0.0001
MALE	−1.33399065	0.10621334	1228.37181405	157.74	0.0001
YOUNG	0.86034711	0.09977145	579.05158823	74.36	0.0001
DRINK	1.73507462	0.27938756	300.33406907	38.57	0.0001
DUMMY_FL	1.17092992	0.07322547	1991.22295614	255.70	0.0001
DUMMY_MD	0.64541483	0.09276482	376.95864460	48.41	0.0001
DUMMY_NC	0.50232907	0.03749136	1397.96646995	179.52	0.0001
DUMMY_PA	1.17247270	0.06537935	2504.41755183	321.61	0.0001
DUMMY_UT	0.83176783	0.05431222	1826.38170253	234.54	0.0001

Figure A-1:
Rollovers per Single-Vehicle Crash Estimated from Six States
(Averages Across States for Each Vehicle Group)

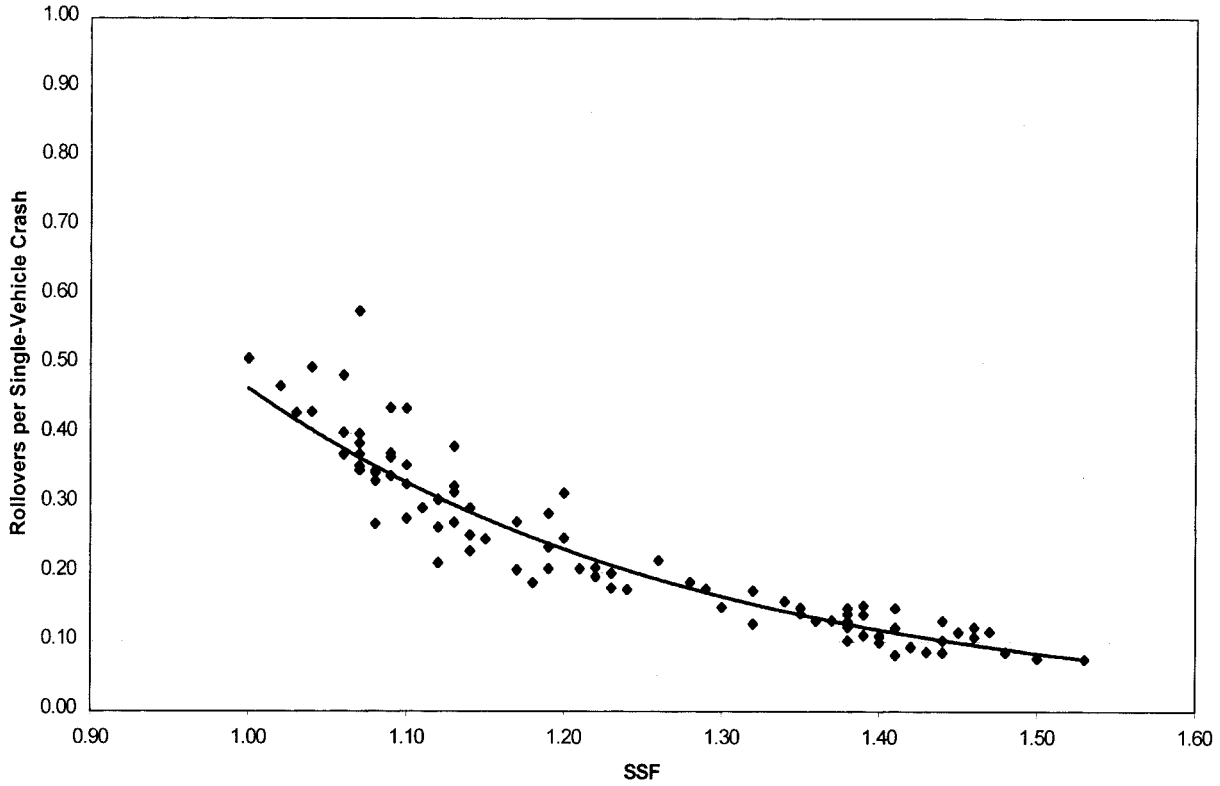

Figure A-2:
Rollovers per Single-Vehicle Crash in Florida
(Estimated from an Adjustment Developed from Six States)

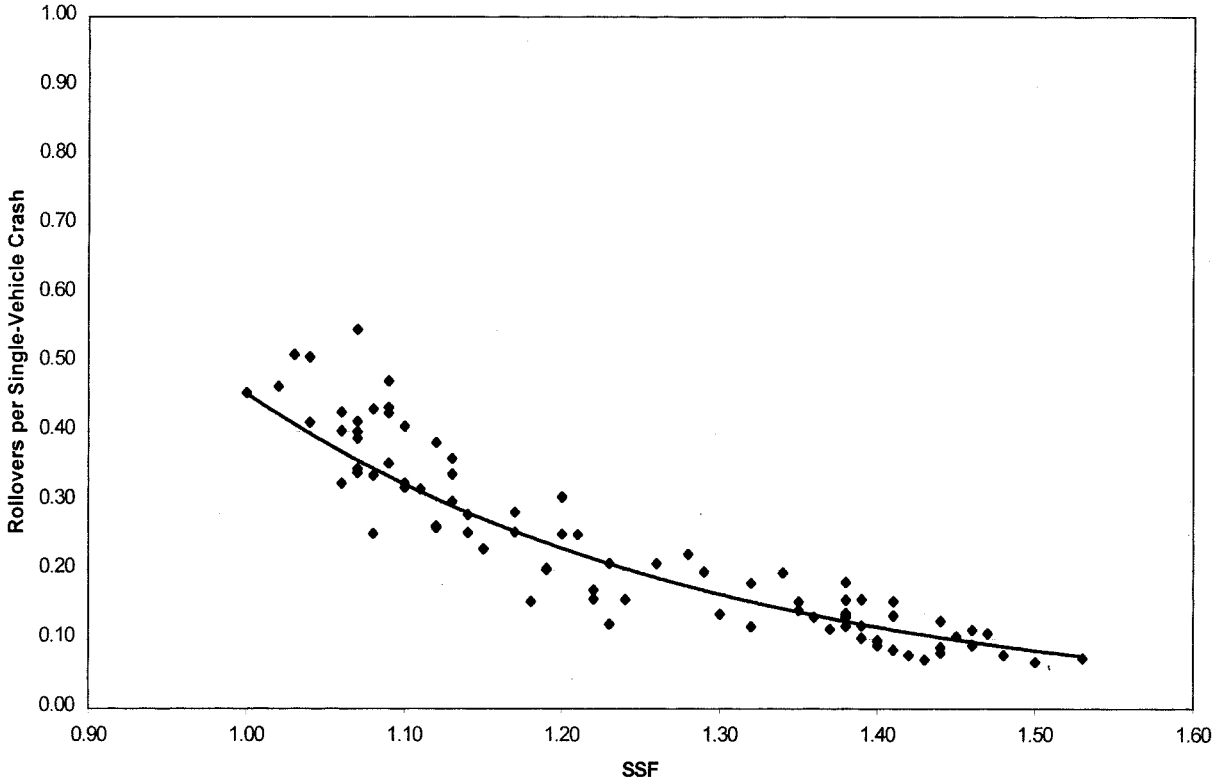

Figure A-3:
Rollovers per Single-Vehicle Crash in Florida
(Comparison for Each Vehicle Group in Two Time Periods)

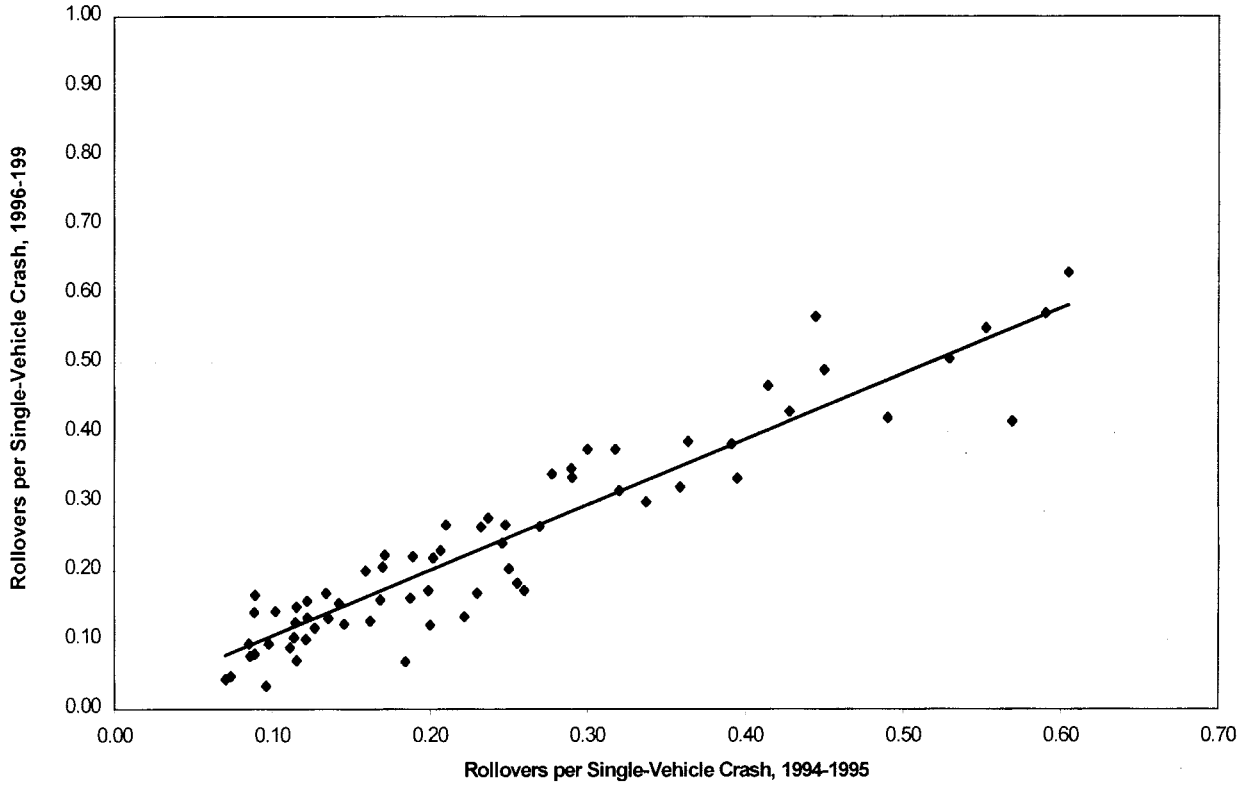

[FR Doc. 00–13443 Filed 5–25–00; 3:01 pm]
BILLING CODE 4910–59–C