AUTHENTICATED
U.S. GOVERNMENT
INFORMATION
GPO

Federal Register

6–6–00 Tuesday
Vol. 65 No. 109 June 6, 2000
Pages 35807–36052

The **FEDERAL REGISTER** is published daily, Monday through Friday, except official holidays, by the Office of the Federal Register, National Archives and Records Administration, Washington, DC 20408, under the Federal Register Act (44 U.S.C. Ch. 15) and the regulations of the Administrative Committee of the Federal Register (1 CFR Ch. I). The Superintendent of Documents, U.S. Government Printing Office, Washington, DC 20402 is the exclusive distributor of the official edition.

The **Federal Register** provides a uniform system for making available to the public regulations and legal notices issued by Federal agencies. These include Presidential proclamations and Executive Orders, Federal agency documents having general applicability and legal effect, documents required to be published by act of Congress, and other Federal agency documents of public interest.

Documents are on file for public inspection in the Office of the Federal Register the day before they are published, unless the issuing agency requests earlier filing. For a list of documents currently on file for public inspection, see http://www.nara.gov/fedreg.

The seal of the National Archives and Records Administration authenticates the Federal Register as the official serial publication established under the Federal Register Act. Under 44 U.S.C. 1507, the contents of the **Federal Register** shall be judicially noticed.

The **Federal Register** is published in paper and on 24x microfiche. It is also available online at no charge as one of the databases on GPO Access, a service of the U.S. Government Printing Office.

The online edition of the **Federal Register** is issued under the authority of the Administrative Committee of the Federal Register as the official legal equivalent of the paper and microfiche editions (44 U.S.C. 4101 and 1 CFR 5.10). It is updated by 6 a.m. each day the **Federal Register** is published and it includes both text and graphics from Volume 59, Number 1 (January 2, 1994) forward.

GPO Access users can choose to retrieve online **Federal Register** documents as TEXT (ASCII text, graphics omitted), PDF (Adobe Portable Document Format, including full text and all graphics), or SUMMARY (abbreviated text) files. Users should carefully check retrieved material to ensure that documents were properly downloaded.

On the World Wide Web, connect to the **Federal Register** at http://www.access.gpo.gov/nara. Those without World Wide Web access can also connect with a local WAIS client, by Telnet to swais.access.gpo.gov, or by dialing (202) 512-1661 with a computer and modem. When using Telnet or modem, type swais, then log in as guest with no password.

For more information about GPO Access, contact the GPO Access User Support Team by E-mail at gpoaccess@gpo.gov; by fax at (202) 512–1262; or call (202) 512–1530 or 1–888–293–6498 (toll free) between 7 a.m. and 5 p.m. Eastern time, Monday–Friday, except Federal holidays.

The annual subscription price for the **Federal Register** paper edition is $638, or $697 for a combined **Federal Register,** Federal Register Index and List of CFR Sections Affected (LSA) subscription; the microfiche edition of the **Federal Register** including the Federal Register Index and LSA is $253. Six month subscriptions are available for one-half the annual rate. The charge for individual copies in paper form is $9.00 for each issue, or $9.00 for each group of pages as actually bound; or $2.00 for each issue in microfiche form. All prices include regular domestic postage and handling. International customers please add 25% for foreign handling. Remit check or money order, made payable to the Superintendent of Documents, or charge to your GPO Deposit Account, VISA, MasterCard or Discover. Mail to: New Orders, Superintendent of Documents, P.O. Box 371954, Pittsburgh, PA 15250–7954.

There are no restrictions on the republication of material appearing in the **Federal Register.**

How To Cite This Publication: Use the volume number and the page number. Example: 65 FR 12345.

Printed on recycled paper.

SUBSCRIPTIONS AND COPIES

PUBLIC	
Subscriptions:	
Paper or fiche	**202–512–1800**
Assistance with public subscriptions	**512–1806**
General online information	**202–512–1530; 1–888–293–6498**
Single copies/back copies:	
Paper or fiche	**512–1800**
Assistance with public single copies	**512–1803**
FEDERAL AGENCIES	
Subscriptions:	
Paper or fiche	**523–5243**
Assistance with Federal agency subscriptions	**523–5243**

FEDERAL REGISTER WORKSHOP

THE FEDERAL REGISTER: WHAT IT IS AND HOW TO USE IT

FOR: Any person who uses the Federal Register and Code of Federal Regulations.

WHO: Sponsored by the Office of the Federal Register.

WHAT: Free public briefings (approximately 3 hours) to present:

1. The regulatory process, with a focus on the Federal Register system and the public's role in the development of regulations.
2. The relationship between the Federal Register and Code of Federal Regulations.
3. The important elements of typical Federal Register documents.
4. An introduction to the finding aids of the FR/CFR system.

WHY: To provide the public with access to information necessary to research Federal agency regulations which directly affect them. There will be no discussion of specific agency regulations.

WASHINGTON, DC

WHEN: July 11, 2000, at 9:00 a.m.

WHERE: Office of the Federal Register
Conference Room
800 North Capitol Street, NW.
Washington, DC
(3 blocks north of Union Station Metro)

RESERVATIONS: 202–523–4538

Contents

Federal Register

Vol. 65, No. 109

Tuesday, June 6, 2000

Agricultural Marketing Service
RULES
Cotton classing, testing, and standards:
Classification services to growers; 2000 user fees, 35807–35808
Fluid milk promotion order, 35808–35810
PROPOSED RULES
Meats, prepared meats, and meat products; grading, certification, and standards:
Livestock and poultry products; equipment used in slaughter, processing, and packaging; certification of sanitary design and fabrication, 35857–35869

Agriculture Department
See Agricultural Marketing Service
See Food and Nutrition Service
See Forest Service
See Natural Resources Conservation Service

Alcohol, Tobacco and Firearms Bureau
PROPOSED RULES
Alcohol; viticultural area designations:
Walla Walla Valley and Columbia Valley, WA; boundary revision, 35871–35875

Centers for Disease Control and Prevention
NOTICES
Grant and cooperative agreement awards:
University of Miami; comprehensive cancer control, 35937–35939
Grants and cooperative agreements; availability, etc.:
Human immunodeficiency virus (HIV)—
National organizations to enable postsecondary institutions to prevent HIV infection and other important health problems among youth, 35939–35943

Coast Guard
RULES
Drawbridge operations:
California, 35825–35826
Florida, 35826–35827
Ports and waterways safety:
Chesapeake Bay, VA; safety zone, 35838–35840
First Coast Guard District navigable waters; regulated navigation area, 35832–35838
OPSAIL 2000, New York Harbor, East River, and Hudson River, NY and NJ; safety zones, 35827–35832
NOTICES
Committees; establishment, renewal, termination, etc.:
National Boating Safety Advisory Council, 35996–35997

Commerce Department
See International Trade Administration
See National Oceanic and Atmospheric Administration

Corporation for National and Community Service
NOTICES
Agency information collection activities:
Proposed collection; comment request, 35906–35907

Defense Department
RULES
Acquisition regulations:
Cost accounting standards; waiver, 36033–36035
NAFTA procurement threshold, 36033–36034
Federal Acquisition Regulation (FAR):
Cost accounting standards coverage; applicability, thresholds, and waiver, 36027–36030
FAR drafting principles, 36014–36016
Federal Procurement Office policy letters; rescission, 36013–36014
General records schedules, 36020–36023
Introduction, 36011–36013
Recycled products and environmentally preferable services; supporting procurement requirements, 36015–36021
Small business opportunities; Federal supply schedules, 36022–36025
Small entity compliance guide, 36030–36032
Technical amendments, 36029–36031
Trade agreements thresholds, 36024–36027
Yugoslavia and Afghanistan acquisitions; restrictions, 36026–36028

Defense Nuclear Facilities Safety Board
RULES
Freedom of Information Act; implementation:
Fee schedule, 35810

Education Department
NOTICES
Agency information collection activities:
Proposed collection; comment request, 35907–35908
Submission for OMB review; comment request, 35908–35910
Special education and rehabilitative services:
Individuals with Disabilities Education Act (IDEA)—
Correspondence; quarterly list, 36037–36040

Energy Department
See Federal Energy Regulatory Commission

Environmental Protection Agency
RULES
Air quality implementation plans; approval and promulgation; various States:
Pennsylvania, 35840–35842
PROPOSED RULES
Air quality implementation plans; approval and promulgation; various States:
Pennsylvania, 35875
NOTICES
Agency information collection activities:
Submission for OMB review; comment request, 35922–35925
Committees; establishment, renewal, termination, etc.:
EPA-USDA Committee to Advise on Reassessment and Transition; meeting, 35925
Hazardous pollutants assessment; benchmark dose software; availability, 35925–35926
Meetings:
Science Advisory Board, 35926–35927

Municipal solid waste landfill permit programs; adequacy determinations:
Guam, 35927–35928
Pesticide registration, cancellation, etc.:
BioTEPP, Inc., et al., 35928–35929
Project XL (excellence and leadership); innovative technologies projects:
Labs21 program; improved environmental performance at laboratories; policy or regulatory flexibility as incentive, 35929–35931

Equal Employment Opportunity Commission
NOTICES
Agency information collection activities:
Submission for OMB review; comment request, 35931–35932

Executive Office of the President
See Trade Representative, Office of United States
See Presidential Documents

Federal Aviation Administration
RULES
Administrative regulations:
Air traffic and related services for aircraft that transit U.S.-controlled airspace but neither take off from, nor land in, U.S.; fees, 36001–36009
Airworthiness directives:
Eurocopter France, 35819–35822
Fokker, 35817–35819
Rolls-Royce plc, 35814–35817
Airworthiness standards:
Special conditions—
Raytheon Aircraft Co. Model 4000 airplane, 35813–35814
VOR and colored Federal airways and jet routes, 35822–35823
PROPOSED RULES
Airworthiness directives:
MD Helicopters, Inc., 35869–35871
NOTICES
Air carrier certification and operations:
Emergency medical equipment; automatic external defibrillators at airports; requirements, 35971–35973
Civil penalty actions; Administrator's decisions and orders; index availability, 35973–35989
Exemption petitions; summary and disposition, 35989–35991
Passenger facility charges; applications, etc.:
Kalamazoo/Battle Creek International Airport, MI, 35991–35992

Federal Communications Commission
RULES
Common carrier services:
Personal communications services—
Narrowband rules; modifications; competitive bidding, 35843–35855
PROPOSED RULES
Common carrier services:
Personal communications services—
Narrowband spectrum; unlicensed megahertz; decision whether to license or not; competitive bidding, 35875–35877
NOTICES
Meetings:
North American Numbering Council, 35932–35933
Meetings; Sunshine Act, 35933–35934

Federal Deposit Insurance Corporation
NOTICES
Meetings; Sunshine Act, 35934

Federal Energy Regulatory Commission
NOTICES
Electric rate and corporate regulation filings:
P&L Coal Holdings Corp. et al., 35920–35921
Hydroelectric applications, 35921–35922
Applications, hearings, determinations, etc.:
American Electric Power Service Corp. et al., 35910
Baconton Power LLC, 35910
Cabrillo Power II LLC, 35910–35911
California Independent System Operator Corp., 35911
Commonwealth Edison Co., 35911
Duke Energy Corp., 35911, 35912
Dynegy Inc. et al., 35912
East Tennessee Natural Gas Co., 35912
Electric Energy, Inc., 35912–35913
Garden Banks Gas Pipeline, LLC, 35913
Kansas City Power & Light Co., 35913–35914
Louisville Gas & Electric Co. et al., 35915
Mid-Continent Area Power Pool, 35915
Midwest Generation, LLC, 35915
Mississippi Canyon Gas Pipeline, LLC, 35916
Nautilus Pipeline Co., L.L.C., 35916
New England Power Co. et al., 35916–35917
New York Independent System Operator, Inc., 35917
Northern States Power Co., 35917
P&L Coal Holdings Corp. et al., 35917
Southern Energy Delta, L.L.C., et al., 35918
Southwestern Public Service Co., 35918
Stockport Mill Country Inn Water Power Project, 35918
Strategic Power Management, Inc., 35918–35919
Tampa Electric Co., 35919
USGen New England, Inc., 35919–35920
UtiliCorp United Inc. et al., 35920

Federal Railroad Administration
NOTICES
Exemption petitions, etc.:
Burlington Northern Santa Fe Railway Co., 35992
Durbin & Greenbrier Valley Railroad, Inc., 35992
Kankakee, Beaverville & Southern Railroad, 35993
Ouachita Railroad, 35993
Peninsula Terminal Co., 35993–35994
Relco Locomotives, Inc., 35994
Traffic control systems; discontinuance or modification:
Burlington Northern & Santa Fe Railway, 35994–35995
Colorado Transportation Department, 35995–35996
CSX Transportation, Inc., 35971, 35996, 35997
Missouri & Northern Arkansas Railroad, 35997–35998
Union Pacific Railroad Co., 35998

Federal Reserve System
NOTICES
Agency information collection activities:
Proposed collection; comment request, 35934–35935
Banks and bank holding companies:
Formations, acquisitions, and mergers, 35935

Federal Trade Commission
NOTICES
Prohibited trade practices:
Zim Textile Corp., 35935–35936

Financial Management Service
See Fiscal Service

Fiscal Service
NOTICES
Surety companies acceptable on Federal bonds:
Frontier Insurance Co.; termination, 35998–35999

Fish and Wildlife Service
NOTICES
Comprehensive conservation plans; availability, etc.:
Tewaukon National Wildlife Refuge Complex, ND, 35950
Endangered and threatened species:
Findings on petitions, etc.—
Southern torrent salamander, 35951–35956

Food and Drug Administration
RULES
Animal drugs, feeds, and related products:
Selenium yeast in feed and drinking water, 35823–35824
NOTICES
Meetings:
Arthritis Advisory Committee, 35943–35944
Reports and guidance documents; availability, etc.:
Blood and blood components; uniform labeling standards; recognition and use, 35944–35945
Fumonisin levels in human foods and animal feeds, 35945

Food and Nutrition Service
NOTICES
Agency information collection activities:
Proposed collection; comment request, 35882

Forest Service
NOTICES
Appealable decisions; legal notice:
Intermountain Region, 35882–35884
Environmental statements; notice of intent:
Tongass National Forest, AK, 35884–35885

General Accounting Office
NOTICES
Committees; establishment, renewal, termination, etc.:
Medicare Payment Advisory Committee, 35936

General Services Administration
RULES
Federal Acquisition Regulation (FAR):
Cost accounting standards coverage; applicability, thresholds, and waiver, 36027–36030
FAR drafting principles, 36014–36016
Federal Procurement Office policy letters; rescission, 36013–36014
General records schedules, 36020–36023
Introduction, 36011–36013
Recycled products and environmentally preferable services; supporting procurement requirements, 36015–36021
Small business opportunities; Federal supply schedules, 36022–36025
Small entity compliance guide, 36030–36032
Technical amendments, 36029–36031
Trade agreements thresholds, 36024–36027
Yugoslavia and Afghanistan acquisitions; restrictions, 36026–36028

Health and Human Services Department
See Centers for Disease Control and Prevention
See Food and Drug Administration
See Health Care Financing Administration
See Health Resources and Services Administration
NOTICES
Meetings:
Vital and Health Statistics National Committee, 35936–35937

Health Care Financing Administration
NOTICES
Agency information collection activities:
Proposed collection; comment request, 35945–35946
Submission for OMB review; comment request, 35946–35947
Meetings:
Medicare program; documentation guidelines for evaluation and management services; town hall meeting, 35947–35948
Privacy Act:
Systems of records, 35948

Health Resources and Services Administration
NOTICES
Agency information collection activities:
Proposed collection; comment request, 35948–35949
Committees; establishment, renewal, termination, etc.:
Childhood Vaccines Advisory Commission, 35949–35950
Meetings:
Childhood Vaccines Advisory Commission, 35950

Housing and Urban Development Department
RULES
Public and Indian housing:
Public Housing Assessment System; amendments
Correction, 36041–36046
NOTICES
Public and Indian housing:
Public Housing Assessment System; transitional assistance, 36046–36047

Interior Department
See Fish and Wildlife Service
See Minerals Management Service
See National Park Service
See Reclamation Bureau

International Trade Administration
NOTICES
Antidumping:
Dynamic random access memory semiconductors of one megabit or above from—
Korea, 35886–35892
Frozen concentrated orange juice from—
Brazil, 35892–35896
Polyvinyl alcohol from—
Taiwan, 35896–35901
Porcelain-on-steel cookware from—
Mexico, 35901

Justice Department
See National Institute of Justice

Labor Department
NOTICES
Agency information collection activities:
Submission for OMB review; comment request, 35961–35963

Minerals Management Service
RULES
Outer Continental Shelf; oil, gas, and sulphur operations:
CFR subparts revision; sections assigned new section numbers; correction, 35824

National Aeronautics and Space Administration
RULES
Federal Acquisition Regulation (FAR):
Cost accounting standards coverage; applicability, thresholds, and waiver, 36027–36030
FAR drafting principles, 36014–36016
Federal Procurement Office policy letters; rescission, 36013–36014
General records schedules, 36020–36023
Introduction, 36011–36013
Recycled products and environmentally preferable services; supporting procurement requirements, 36015–36021
Small business opportunities; Federal supply schedules, 36022–36025
Small entity compliance guide, 36030–36032
Technical amendments, 36029–36031
Trade agreements thresholds, 36024–36027
Yugoslavia and Afghanistan acquisitions; restrictions, 36026–36028
NOTICES
Meetings:
Advisory Council
Aero-Space Technology Advisory Committee, 35963–35964
Space Science Advisory Committee, 35964

National Archives and Records Administration
RULES
NARA facilities:
Public use; miscellaneous amendments
Correction, 35840

National Institute of Justice
NOTICES
Grants and cooperative agreements; availability, etc.:
Communications Interoperability and Information Sharing Technologies, 35961

National Oceanic and Atmospheric Administration
RULES
Fishery conservation and management:
Atlantic highly migratory species—
Large coastal shark, small coastal shark, and pelagic shark species, 35855–35856
PROPOSED RULES
Fishery conservation and management:
Atlantic highly migratory species—
North Atlantic swordfish, 35881
Caribbean, Gulf, and South Atlantic fisheries—
South Atlantic snapper-grouper, 35877–35881
Ocean and coastal resource management:
Marine sanctuaries—
Florida Keys National Marine Sanctuary; boundary expansion; correction, 35871
NOTICES
Marine mammals:
Ecuador; yellowfin tuna and products; affirmative finding, 35901–35902
Meetings:
Mid-Atlantic Fishery Management Council, 35902–35903
Permits:
Marine mammals, 35903–35906

National Park Service
NOTICES
National Register of Historic Places:
Pending nominations, 35956–35957

National Science Foundation
NOTICES
Agency information collection activities:
Submission for OMB review; comment request, 35964–35965

National Transportation Safety Board
NOTICES
Meetings; Sunshine Act, 35965

Natural Resources Conservation Service
NOTICES
Environmental statements; availability, etc.:
Black Bayou Culverts Hydrologic Restoration Project, LA, 35885–35886

Nuclear Regulatory Commission
NOTICES
Agency information collection activities:
Proposed collection; comment request, 35965–35966
Meetings:
Integrated Safety Analysis guidance document, etc., 35968
Applications, hearings, determinations, etc.:
Wisconsin Electric Power Co., 35966–35968

Nuclear Waste Technical Review Board
NOTICES
Meetings:
Spent nuclear fuel and high-level radioactive waste; management and transportation; human factors, etc., 35968–35969

Office of United States Trade Representative
See Trade Representative, Office of United States

Presidential Documents
PROCLAMATIONS
Special observances:
Gay and Lesbian Pride Month (Proc. 7316), 36051–36052

Public Debt Bureau
See Fiscal Service

Public Health Service
See Centers for Disease Control and Prevention
See Food and Drug Administration
See Health Resources and Services Administration

Reclamation Bureau
NOTICES
Environmental statements; notice of intent:
Flaming Gorge Dam, Colorado River Storage Project, UT, 35957–35961

Small Business Administration
RULES
Small business size standards:
Help Supply Services; $10 million in average annual receipts, 35810–35813

Trade Representative, Office of United States
NOTICES
World Trade Organization:
Canada and U.S.; consultations regarding measures treating export restraints as subsidies, 35969–35970
Dispute settlement panel establishment requests—Japan; hot-rolled steel products, 35970–35971

Transportation Department
See Coast Guard
See Federal Aviation Administration
See Federal Railroad Administration

Treasury Department
See Alcohol, Tobacco and Firearms Bureau
See Fiscal Service

Separate Parts In This Issue

Part II
Federal Aviation Administration, 36001–36009

Part III
General Services Administration, Department of Defense, National Aeronautics and Space Administration, 36011–36032

Part IV
Department of Defense, 36033–36035

Part V
Department of Education, 36037–36040

Part VI
Department of Housing and Urban Development, 36041–36047

Part VII
The President, 36049–36052

Reader Aids
Consult the Reader Aids section at the end of this issue for phone numbers, online resources, finding aids, reminders, and notice of recently enacted public laws.

CFR PARTS AFFECTED IN THIS ISSUE

A cumulative list of the parts affected this month can be found in the Reader Aids section at the end of this issue.

3 CFR
Proclamations:
7316 36051
Executives Orders:
13087 (See Proclamation 7316) 36051

7 CFR
28 35807
1160 35808
Proposed Rules:
54 35857

10 CFR
1703 35810

13 CFR
121 35810

14 CFR
25 35813
39 (3 documents) 35814, 35817, 35819
71 35822
187 36002
Proposed Rules:
39 35869

15 CFR
Proposed Rules:
922 35871

21 CFR
573 35823

24 CFR
902 36042

27 CFR
Proposed Rules:
9 35871

30 CFR
250 35824

33 CFR
117 (2 documents) 35825, 35826
165 (3 documents) 35827, 35832, 35838

36 CFR
1280 35840

40 CFR
52 35840
Proposed Rules:
52 35875

47 CFR
24 35843
Proposed Rules:
24 35875

48 CFR
Ch. 1 (2 documents) 36012, 36031
1 (2 documents) 36014, 36015
2 36016
3 36030
4 (2 documents) 36016, 36021
5 36030
7 36016
8 36023
9 36014
11 36016
13 36016
15 36014
22 36014
23 36016
25 (2 documents) 36025, 36027
30 36028
35 36014
37 36014
38 36023
42 36014
47 36030
49 36030
52 (5 documents) 36015, 36016, 36025, 36027, 36028
225 36034
230 36034

50 CFR
635 35855
Proposed Rules:
622 35877
635 35881

Rules and Regulations

Federal Register
Vol. 65, No. 109
Tuesday, June 6, 2000

This section of the FEDERAL REGISTER contains regulatory documents having general applicability and legal effect, most of which are keyed to and codified in the Code of Federal Regulations, which is published under 50 titles pursuant to 44 U.S.C. 1510.

The Code of Federal Regulations is sold by the Superintendent of Documents. Prices of new books are listed in the first FEDERAL REGISTER issue of each week.

DEPARTMENT OF AGRICULTURE

Agricultural Marketing Service

7 CFR Part 28

[Docket No. CN–99–003]

RIN 0581–AB57

Revision of User Fees for 2000 Crop Cotton Classification Services to Growers

AGENCY: Agricultural Marketing Service, USDA.

ACTION: Final rule.

SUMMARY: The Agricultural Marketing Service (AMS) will maintain user fees for cotton producers for 2000 crop cotton classification services under the Cotton Statistics and Estimates Act at the same level as in 1999. This is in accordance with the formula provided in the Uniform Cotton Classing Fees Act of 1987. The 1999 user fee for this classification service was $1.35 per bale. This final rule would maintain the fee for the 2000 crop at $1.35 per bale. The fee and the existing reserve are sufficient to cover the costs of providing classification services, including costs for administration and supervision.

EFFECTIVE DATE: July 1, 2000.

FOR FURTHER INFORMATION CONTACT: Lee Cliburn, Cotton Program, 202–720-2145.

SUPPLEMENTARY INFORMATION: A proposed rule detailing the revisions was published in the **Federal Register** on March 8, 2000 (65 FR 12140). A 30-day comment period was provided for interested persons to respond to the proposed rule. No comments were received, and no changes have been made in the provisions of the final rule.

This final rule has been determined to be not significant for purposes of Executive Order 12866, and it has not been reviewed by the Office of Management and Budget (OMB).

This final rule has been reviewed under Executive Order 12988, Civil Justice Reform. It is not intended to have retroactive effect. This rule would not preempt any state or local laws, regulations, or policies unless they present an irreconcilable conflict with this rule. There are no administrative procedures which must be exhausted prior to any judicial challenge to the provisions of this rule.

Regulatory Flexibility Act

Pursuant to requirements set forth in the Regulatory Flexibility Act (RFA) (5 U.S.C. 601 *et seq.*) AMS has considered the economic impact of this action on small entities and has determined that its implementation will not have a significant economic impact on a substantial number of small businesses.

The purpose of the RFA is to fit regulatory actions to the scale of businesses subject to such actions in order that small businesses will not be disproportionately burdened. There are an estimated 35,000 cotton growers in the U.S. who voluntarily use the AMS cotton classing services annually, and the majority of these cotton growers are small businesses under the criteria established by the Small Business Administration (13 CFR 121.201). Continuing the user fee at the 1999 crop level will not significantly affect small businesses as defined under the RFA because:

(1) The fee represents a very small portion of the cost-per-unit currently borne by those entities utilizing the services (the 1999 user fee for classification services was $1.35 per bale; the fee for the 2000 crop will be maintained at $1.35 per bale; the 2000 crop is estimated at 17,945,000 bales);

(2) The fee for services will not affect competition in the marketplace; and

(3) The use of classification services is voluntary. For the 1999 crop, 16,409,650 bales were produced, and virtually all of them were submitted by growers for the classification service.

(4) Based on the average price paid to growers for cotton from the 1998 crop of 65.3 cents per pound, 500 pound bales of cotton are worth an average of $326.50 each. The user fee for classification services, $1.35 per bale, is less than one percent of the value of an average bale of cotton.

Paperwork Reduction Act

In compliance with OMB regulations (5 CFR part 1320) which implement the Paperwork Reduction Act (PRA) (44 U.S.C. 3501 *et seq.*), the information collection requirements contained in the provisions to be amended by this proposed rule have been previously approved by OMB and were assigned OMB control number 0581–0009 under the Paperwork Reduction Act (44 U.S.C. 3501 *et seq.*).

The changes will be made effective July 1, 2000, as provided by the Cotton Statistics and Estimates Act.

Fees for Classification Under the Cotton Statistics and Estimates Act of 1927

The user fee charged to cotton producers for High Volume Instrument (HVI) classification services under the Cotton Statistics and Estimates Act (7 U.S.C. 473a) was $1.35 per bale during the 1999 harvest season as determined by using the formula provided in the Uniform Cotton Classing Fees Act of 1987, as amended by Public Law 102–237. The fees cover salaries, costs of equipment and supplies, and other overhead costs, including costs for administration, and supervision.

This final rule establishes the user fee charged to producers for HVI classification at $1.35 per bale during the 2000 harvest season.

Public Law 102–237 amended the formula in the Uniform Cotton Classing Fees Act of 1987 for establishing the producer's classification fee so that the producer's fee is based on the prevailing method of classification requested by producers during the previous year. HVI classing was the prevailing method of cotton classification requested by producers in 1999. Therefore, the 2000 producer's user fee for classification service is based on the 1999 base fee for HVI classification.

The fee was calculated by applying the formula specified in the Uniform Cotton Classing Fees Act of 1987, as amended by Public Law 102–237. The 1999 base fee for HVI classification exclusive of adjustments, as provided by the Act, was $2.14 per bale. An increase of one and thirty-nine hundredths percent, or three cents per bale increase due to the implicit price deflator of the gross domestic product added to the $2.14, would result in a 2000 base fee of $2.17 per bale. The formula in the Act provides for the use of the percentage

change in the implicit price deflator of the gross national product (as indexed for the most recent 12-month period for which statistics are available). However, this has been replaced by the gross domestic product by the Department of Commerce as a more appropriate measure for the short-term monitoring and analysis of the U.S. economy.

The number of bales to be classed by the United States Department of Agriculture from the 2000 crop is estimated at 17,945,000 bales. The 2000 base fee was decreased 15 percent based on the estimated number of bales to be classed (one percent for every 100,000 bales or portion thereof above the base of 12,500,000, limited to a maximum adjustment of 15 percent). This percentage factor amounts to a 33 cents per bale reduction and was subtracted from the 2000 base fee of $2.17 per bale, resulting in a fee of $1.84 per bale.

With a fee of $1.84 per bale, the projected operating reserve would be 49.77 percent. The Act specifies that the Secretary shall not establish a fee which, when combined with other sources of revenue, will result in a projected operating reserve of more than 25 percent. Accordingly, the fee of $1.84 must be reduced by 49 cents per bale, to $1.35 per bale, to provide an ending accumulated operating reserve for the fiscal year of 25 percent of the projected cost of operating the program. This will establish the 2000 season fee at $1.35 per bale.

Accordingly, § 28.909, paragraph (b) will reflect the continuation of the HVI classification fee at $1.35 per bale.

As provided for in the Uniform Cotton Classing Fees Act of 1987, as amended, a five cent per bale discount would continue to be applied to voluntary centralized billing and collecting agents as specified in § 28.909(c).

Growers or their designated agents requesting classification data provided on computer punched cards will continue to be charged the fee of 10 cents per card in § 28.910(a) to reflect the costs of providing this service. Requests for punch card classification data represented less than 1.0 percent of the total bales classed from the 1999 crop, down from 2.6 percent in 1997. Growers or their designated agents receiving classification data by methods other than computer punched cards would continue to incur no additional fees if only one method of receiving classification data was requested. The fee for each additional method of receiving classification data in § 28.910 would remain at five cents per bale, and it would be applicable even if the same method was requested. However, if computer punched cards were requested, a fee of ten cents per card would be charged. The fee in § 28.910(b) for an owner receiving classification data from the central database would remain at five cents per bale, and the minimum charge of $5.00 for services provided per monthly billing period would remain the same. The provisions of § 28.910(c) concerning the fee for new classification memoranda issued from the central database for the business convenience of an owner without reclassification of the cotton will remain the same.

The fee for review classification in § 28.911 will be maintained at $1.35 per bale.

The fee for returning samples after classification in § 28.911 will remain at 40 cents per sample.

Pursuant to 5 U.S.C. 553, it is determined that good cause exists for not postponing the effective date of this rule until 30 days after publication in the **Federal Register** because: (1) the cotton crop year begins July 1, 2000, (2) a uniform fee for the entire crop is mandated by the Cotton Statistics and Estimates Act, and (3) a 30 day comment period was provided for in the proposed rule and no comments were received.

List of Subjects in 7 CFR Part 28

Administrative practice and procedure, Cotton, Cotton samples, Grades, Market news, Reporting and recordkeeping requirements, Standards, Staples, Testing, Warehouses.

For the reasons set forth in the preamble, 7 CFR Part 28 is amended as follows:

PART 28—[AMENDED]

1. The authority citation for 7 CFR part 28, Subpart D, continues to read as follows:

Authority: 7 U.S.C. 471–476.

2. In § 28.909, paragraph (b) is revised to read as follows:

§ 28.909 Costs.

* * * * *

(b) The cost of High Volume Instrument (HVI) cotton classification service to producers is $1.35 per bale.

* * * * *

3. In § 28.911, the last sentence of paragraph (a) is revised to read as follows:

§ 28.911 Review classification.

(a) * * * The fee for review classification is $1.35 per bale.

* * * * *

Dated: May 31, 2000.

Kenneth C. Clayton,

Acting Administrator, Agricultural Marketing Service.

[FR Doc. 00–14114 Filed 6–1–00; 4:36 pm]

BILLING CODE 3410–02–P

DEPARTMENT OF AGRICULTURE

Agricultural Marketing Service

7 CFR Part 1160

[DA–00–07]

Fluid Milk Promotion Order; Amendments to the Order

AGENCY: Agricultural Marketing Service, USDA.

ACTION: Final rule.

SUMMARY: This document amends the Fluid Milk Promotion Order to allow a fluid milk processor to be represented by up to 3 members on the 20-member Board and allow a Board member whose fluid milk processor company affiliation has changed to serve for a period of up to 6 months or until a successor is appointed, whichever is sooner. The amendments, requested by the National Fluid Milk Processor Promotion Board (Board), which administers the Order, are necessary to ensure Board continuity and full representation and should allow the Board to operate in an efficient and effective manner.

EFFECTIVE DATE: June 7, 2000.

FOR FURTHER INFORMATION CONTACT: David R. Jamison, Chief, USDA/AMS/Dairy Programs, Promotion and Research Branch, 1400 Independence Avenue, SW, Stop 0233, Room 2958 South Building, Washington, DC 20250–0233, (202) 720–6909, David.Jamison2@usda.gov.

SUPPLEMENTARY INFORMATION: The Regulatory Flexibility Act (5 U.S.C. 601–612) requires the Agency to examine the impact of a proposed rule on small entities. Small businesses in the fluid milk processing industry have been defined by the Small Business Administration as those processors employing not more than 500 employees. For purposes of determining a processor's size, if the plant is part of a larger company operating multiple plants that collectively exceed the 500-employee limit, the plant will be considered a large business even if the local plant has fewer than 500 employees. There are approximately 275 fluid milk processors subject to the provisions of the Fluid Milk Promotion Order. Most of these processors are considered small entities.

The Fluid Milk Promotion Order (7 CFR Part 1160) is authorized under the Fluid Milk Promotion Act of 1990 (Act) (7 U.S.C. 6401 *et seq.*). The amendments, proposed by the National Fluid Milk Processor Promotion Board, modifies the membership provisions of the Order.

The amendments will allow up to three representatives of a fluid milk processor to serve on the 20-person Board. Currently, the Order states that a fluid milk processor shall be represented on the Board by no more than two members. This action takes into account changes in the industry which have resulted in the formation of larger regional and national companies. This amendment should help reduce Board vacancies and foster continuity in Board activities and membership.

The amendments also will allow a Board member whose fluid milk processor company affiliation changes to serve on the Board for a period of up to six months or until a successor is appointed, whichever is sooner, provided that the eligibility requirements of the Order are still met. Under current Order provisions, a Board member whose company affiliation changes may continue to serve on the Board for a period of up to 60 days or until a successor is appointed, whichever is sooner, provided that such member continues to meet the Order's eligibility standards. The amendment will more accurately reflect the time needed to fill a Board vacancy.

The amendments will allow the Board to operate in an effective and efficient manner. The amendments to the Order will not add any burden to regulated parties because they relate to provisions concerning Board membership. Additionally, the changes will not impose additional reporting or collecting requirements. No relevant Federal rules have been identified that duplicate, overlap, or conflict with this rule.

Accordingly, pursuant to 5 U.S.C. 605(b), the Agricultural Marketing Service has certified that this rule will not have a significant economic impact on a substantial number of small entities.

Prior document in this proceeding:

Proposed Rule: Issued March 14, 2000, published March 17, 2000 (65 FR 14484).

Executive Order 12866 and the Paperwork Reduction Act

The Department is issuing this rule in conformance with Executive Order 12866.

This final rule has been reviewed under Executive Order 12988, Civil Justice Reform. This rule is not intended to have a retroactive effect. This rule will not preempt any State or local laws, regulations, or policies unless they present an irreconcilable conflict with this rule.

The Fluid Milk Promotion Act of 1990, as amended, authorizes the Fluid Milk Promotion Order. The Act provides that administrative proceedings must be exhausted before parties may file suit in court. Under section 1999K of the Act, any person subject to a Fluid Milk Promotion Order may file with the Secretary a petition stating that the Order, any provision of the Order, or any obligation imposed in connection with the Order is not in accordance with the law and request a modification of the Order or to be exempted from the Order. A person subject to an order is afforded the opportunity for a hearing on the petition. After a hearing, the Secretary would rule on the petition. The Act provides that the district court of the United States in any district in which the person is an inhabitant, or has his principal place of business, has jurisdiction to review the Secretary's ruling on the petition, provided a complaint is filed not later than 20 days after the date of the entry of the ruling.

In accordance with the Paperwork Reduction Act (44 U.S.C. Chapter 35), the forms and reporting and recordkeeping requirements that are included in the Fluid Milk Promotion Order have been approved by the Office of Management and Budget (OMB) and were assigned OMB No. 0581–0093, except for Board members' nominee information sheets that were assigned OMB No. 0505–0001.

Statement of Consideration

This final rule amends certain provisions of the Fluid Milk Promotion Order. The amendments will modify the membership provisions of the Order. One proposal will allow up to three representatives of a fluid milk processor to serve on the 20-member Board. Currently, the Order states that a fluid milk processor shall be represented by no more than two representatives on the Board. This amendment takes into account changes in the industry which have resulted in the formation of larger regional and national companies. Additionally, the amendment would provide the Secretary greater flexibility in those situations that warrant additional representation for a fluid milk processor.

The amendments also will allow a Board member who changes fluid milk processor company affiliation to serve on the Board for a period of up to six months or until a successor is appointed, whichever is sooner, provided that the eligibility requirements of the Order are still met. Under current Order provisions, a Board member whose company affiliation changes may continue to serve on the Board for a period of up to 60 days or until a successor is appointed, whichever is sooner, provided that such member continues to meet the Order's eligibility standards. The amendment would more accurately reflect the time needed to fill a Board vacancy.

The Board states that the amendments would ensure Board continuity and full representation and allow it to operate effectively and efficiently.

A notice of proposed rulemaking was published in the **Federal Register** on March 17, 2000 (65 FR 14484), concerning the proposed suspension. Interested persons were afforded an opportunity to file written data, views and arguments thereon. One comment supporting and one opposing the proposed amendments were received.

The Board reiterated its support for the amendments. The opposing comment stated the proposed changes would provide larger processors more power and suggested reducing the number of Board members.

The Order should be amended to allow a fluid milk processor to be represented by up to 3 members on the 20-member Board. The Order provisions provide for a 20-member Board with 15 members representing geographic regions and five at-large members which include at least three fluid milk processors and at least one member from the general public. Further, to the extent practicable, members representing geographic regions should represent processing operations of differing sizes.

This amendment provides needed flexibility in the appointment process. The Secretary appoints Board members on the basis of the Order's provisions. Through the appointment process, the Secretary maintains control over the Board's composition, including the number of multi-member processors. As stated by the proponent of the proposals, the fluid milk processing industry has experienced and continues to undergo changes in processing operations which result in larger regional and national companies operating in various geographical regions. Accordingly, this amendment will ensure Board continuity and full representation while maintaining the Board at its current membership level.

The Order also should be amended to permit a Board member who changes fluid milk processor company affiliation

to serve on the Board for a period of up to six months or until a successor is appointed, whichever is sooner, provided that the eligibility requirements of the Order are still met. The amendment will more accurately reflect the time needed to fill a Board vacancy.

The amendments will ensure Board continuity and full representation and allow the Board to operate in an effective and efficient manner and should be made effective as soon as possible. Therefore, good cause exists for making this rule effective less than 30 days from the date of publication in the **Federal Register**. The proposed amendments to the order are made final in this action.

List of Subjects in 7 CFR Part 1160

Fluid milk products, Milk, Promotion.

For the reasons set forth in the preamble, 7 CFR part 1160 is amended as follows:

PART 1160—FLUID MILK PROMOTION PROGRAM

1. The authority citation for 7 CFR Part 1160 continues to read as follows:

Authority: 7 U.S.C. 6401–6417.

2. In § 1160.200, paragraph (a) is revised to read as follows:

§ 1160.200 Establishment and membership.

(a) There is hereby established a National Fluid Milk Processor Board of 20 members, 15 of whom shall represent geographic regions and five of whom shall be at-large members of the Board. To the extent practicable, members representing geographic regions shall represent fluid milk processing operations of differing sizes. No fluid milk processor shall be represented on the Board by more than three members. The at-large members shall include at least three fluid milk processors and at least one member from the general public. Except for the member or members from the general public, nominees appointed to the Board must be active owners or employees of a fluid milk processor. The failure of such a member to own or work for a fluid milk processor or its successor fluid milk processor shall disqualify that member for membership on the Board except that such member shall continue to serve on the Board for a period of up to six months following the disqualification or until appointment of a successor Board member to such position, whichever is sooner, provided that such person continues to meet the criteria for serving on the Board as a processor representative.

* * * * *

Dated: May 31, 2000.

Kathleen A. Merrigan,

Administrator, Agricultural Marketing Service.

[FR Doc. 00–14186 Filed 6–5–00; 8:45 am]

BILLING CODE 3410–02–P

DEFENSE NUCLEAR FACILITIES SAFETY BOARD

10 CFR Part 1703

FOIA Fee Schedule

AGENCY: Defense Nuclear Facilities Safety Board.

ACTION: Update of FOIA Fee Schedule.

SUMMARY: The Defense Nuclear Facilities Safety Board is publishing its annual update to the Freedom of Information Act (FOIA) Fee Schedule pursuant to 10 CFR 1703.107(b)(6) of the Board's regulations.

EFFECTIVE DATE: June 1, 2000.

FOR FURTHER INFORMATION CONTACT: Kenneth M. Pusateri, General Manager, Defense Nuclear Facilities Safety Board, 625 Indiana Avenue, NW, Suite 700, Washington, DC 20004–2901, (202) 694–7060.

SUPPLEMENTARY INFORMATION: The FOIA requires each Federal agency covered by the Act to specify a schedule of fees applicable to processing of requests for agency records. 5 U.S.C. 552(a)(4)(i). On March 15, 1991, the Board published for comment in the **Federal Register** its proposed FOIA Fee Schedule. 56 FR 11114. No comments were received in response to that notice and the Board issued a final Fee Schedule on May 6, 1991.

Pursuant to 10 CFR 1703.107(b)(6) of the Board's regulations, the Board's General Manager will update the FOIA Fee Schedule once every 12 months. Previous Fee Schedule updates were published in the **Federal Register** and went into effect, most recently, on June 1, 1999, 99 FR 14685.

Board Action

Accordingly, the Board issues the following schedule of updated fees for services performed in response to FOIA requests.

Defense Nuclear Facilities Safety Board Schedule of Fees for FOIA Services

(Implementing 10 CFR 1703.107(b)(6))

Search or Review Charge—$54 per hour
Copy Charge (paper)—$.04 per page, if done in-house, or generally available commercial rate (approximately $.10 per page)
Copy Charge (3.5′ diskette)—$5.00 per diskette
Copy Charge (audio cassette)—$3.00 per cassette
Duplication of Video
$25.00 for each individual videotape;
$16.00 for each additional individual videotape
Copy Charge for large documents (*e.g.,* maps, diagrams)—Actual commercial rates.

Dated: May 31, 2000.

Kenneth M. Pusateri.

General Manager.

[FR Doc. 00–14043 Filed 6–5–00; 8:45 am]

BILLING CODE 3670–01–M

SMALL BUSINESS ADMINISTRATION

13 CFR Part 121

Small Business Size Standards; Help Supply Services

AGENCY: Small Business Administration.

ACTION: Final rule.

SUMMARY: The Small Business Administration (SBA) is establishing a size standard of $10 million in average annual receipts for Help Supply Services—Standard Industrial Classification (SIC) 7363. The current size standard for this industry is $5.0 million. This revision is made to better define the size of business in this industry that SBA believes should be eligible for Federal small business assistance programs. SBA is also clarifying language about affiliation when a Professional Employer Organization (PEO) is co-employer of a firm's employees.

DATES: This rule is effective on July 6, 2000.

FOR FURTHER INFORMATION CONTACT: Patricia B. Holden, Office of Size Standards, (202) 205–6618 or (202) 205–6385.

SUPPLEMENTARY INFORMATION: SBA proposed a revision to the size standard for the Help Supply Services industry (SIC 7363) from $5.0 million to $10.0 million average annual receipts (64 FR 55873, dated October 15, 1999). The proposal was made following comments from the public expressing concern that the size standard has not kept pace with the rapid growth in the industry due in part to the trends of outsourcing and downsizing. The industry has changed in two ways—help supply firms are larger and they are providing a wider range of personnel to businesses. We also had a request to allow help supply

firms to exclude funds collected for and remitted to unaffiliated third parties from gross receipts, as is currently done for travel agents and real estate agents, since 60 percent to 85 percent of revenues on many Federal contracts are ''passed-through'' to a firm's employees or associates.

The current size standard for this industry, $5.0 million, is based on gross billings including funds paid to employees (sometimes referred to as ''associates''). Based on a review of industry data, SBA proposed increasing the size standard for the Help Supply Services industry to $10 million in average annual receipts. SBA did not propose a change to the way average annual receipts are calculated for firms in the Help Supply Services industry. Under SBA's size regulations (13 CFR 121.104), the size of a firm for a receipts-based size standard is based on information reported on a firm's Federal tax returns. Generally, receipts reported to the Internal Revenue Service (IRS) include a firm's gross receipts or sales from provision of goods or services. Only when firms in an industry generally display certain characteristics will we exclude certain pass-though revenues from the calculation of gross receipts. As explained in the proposed rule, SBA evaluated this issue and concluded that gross receipts is appropriate in calculating the size of a firm in this industry.

The final rule adopts the proposed size standard of $10 million based on our analysis of the industry as presented in the proposed rule. The comments received on the proposed rule did not provide us with sufficient reasons to alter our assessment of the industry data or the position that the size standard should be based on gross receipts. The comments to the proposed rule and our position are discussed below.

Discussion of Comments

We received six timely comments on the proposed size standard—four from individual firms, one from an association and one from an SBA attorney. The association representing over 1,400 firms supported adopting the proposed rule. Of the four firms who commented, two were opposed, one was for and one was for a size standard increase, but higher than the one proposed. The comments raised four major issues. Each of these issues is discussed below along with our response.

Small Firms May Be Harmed by the Increase in the Size Standard

Two comments raised the issue of small firms being at a disadvantage if they would have to compete with firms in the $5.0 million to $10.0 million range. They contend that companies with $5 million to $10 million in receipts have established themselves in the industry. If these businesses were defined as small, they would take away work from the presently defined small businesses. This issue is raised often when we proposes to increase the size standard, and it is a valid concern. However, we believe our analysis of the industry clearly supports that firms of up to $10 million in receipts are small businesses within this industry. The average firm in the industry generates almost $3 million in receipts and firms of $10 million or less in receipts account for only a little more than a third of total industry receipts. Given these and the characteristics discussed in the proposed rule, we believe we have identified the firms reasonably considered small in this industry.

Related to this issue, we are looking into ways to protect the smaller firms while having a size standard that includes firms of sufficient size to handle the typical Federal procurement. One pilot program currently being tested is the Very Small Business Set-Aside Program. This program reserves procurements of $50,000 or less for very small businesses—defined as a business with not more than 15 employees *and* not more than $1.0 million revenues. The pilot program is being conducted within the geographical area of ten SBA district offices. (For more information on this program, please call the SBA's Office of Government Contracting at (202) 205–6460, or visit our web site at http://www.sba.gov/GC/vsbqa.html.)

Size Standards Methodology and Data

One comment disagreed with our use and analysis of the 1992 Census data to evaluate the size standard for this industry. The comment recommended a size standard to $20.0 million based on more recent data on the industry. In particular, the comment presented data (without citing its sources) showing average firm size and the four-firm concentration ratio to be much higher than our calculations shown in the proposed rule. We used the latest available Census Bureau data on this industry. We recognize that the industry has grown since the last data were collected, but until more complete data are available, we must continue to rely on the 1992 Census data as the most complete and representative data available on the Help Supply Services industry for establishing size standards. We expect to get newer data later this year based on the 1997 Economic Census. If these data show the $10 million to be an inappropriate size standard, we will consider publishing another proposal based on an analysis of that new data.

Calculation of Average Annual Receipts

SBA received one comment stating that firms in this industry do indeed work on commissions, but it is called a ''rate'' and that revenues are artificially inflated if labor costs are not excluded from the calculation. The comment asserts that the labor rate is a pass-through and only the mark-up rate is the firm's revenues. They disagreed with the analysis done by SBA on the factors such as agent-like relationship in arriving at the position not to exclude labor costs for this industry. Further, the comment argued that staffing for this industry is like inventory in other industries.

We disagree. The proposed rule stated five characteristics that we consider in assessing whether or not to exclude certain types of ''pass-through'' revenues. The argument that we should view the personnel supplied by help supply services firms to their client firms as inventory did not convince us that an agent-like relationship exists. Help supply services firms are providing their own resources (or ''inventory'') under their control to another firm. On the other hand, the role of an agent is to represent the agent's principal. Often an agent negotiates a transaction bringing parties together, but always acts on behalf of the principal as required by their fiduciary relationship. The comment did not identify which party would be the principal, but it would not be the employees/associates (also described by the comment as ''inventory'') and it would not be the firm using the employees. Rather, help supply services firms act on their own behalf and in their own interest when negotiating to obtain personnel or to supply staffing to a firm. For an agency to exist, there must be a principal-agent relationship and that is not evident in this industry.

We also do not agree with the position that the labor costs of help supply services firms are the same as funds held in trust for another. While there is a close connection between the wages and benefits of personnel supplied by a help supply services firm and the firm using the personnel, it is the help supply services firm that is responsible for paying the employees' wages and benefits. The revenues paid to the help supply services firm by the firm using the employees legally belong to the help supply services firm even though the help supply services firm has a legal obligation to pay its employees. This is

a much different arrangement than holding funds in trust for an unaffiliated third party. Such trust funds are legally owned by the unaffiliated third party, but collected and distributed by the holder on the owner's behalf. An association representing over 1,400 firms in the help supply services industry also rejected the notion that help supply services firms should be viewed as agents. It also stated that the wages and benefits of the help supply services employees are not earmarked for the purpose of paying employees.

Finally, we recognize that the help supply service firms often apply a rate to labor costs in arriving at a price for supplying personnel to a client. The comment estimated an average rate for the industry. However, there does not appear to be a standard rate provided by the industry, which is one necessary characteristic for allowing an exclusion of certain pass-through revenues. Rather, the comment itself acknowledged that rates vary by firm. An average rate charged by firms in the industry is not the same concept as a common or standard rate applied by firms throughout the industry. Also, we note that many industries operate on a cost plus mark-up basis, but are not agents and their costs are not recognized as ''pass-through'' funds.

Impact of the Proposal on Prior Findings of Affiliation

One comment raised the issue of prior findings of affiliation between a franchisor and franchisee in the staffing industry where the franchisor controlled the ''associates'' of the franchisee. His question was how would the proposal to exempt ''Professional Employee Organizations'' (PEOs) from the presumption of affiliation with the firms to whom they supply personnel affect these earlier decisions. Changing the size standard will not affect prior or subsequent findings of affiliation. The clarification regarding PEOs is narrowly written so as not to impact findings of affiliation based on control or other grounds. It addresses the issue of affiliation between the firm using the employees and the PEO supplying the employees under a co-employment arrangement. It does not address the issue of where or how the PEO obtains the employees it subsequently provides to the firm. In many cases, they were formerly the sole employees of the firm using their services before the firm contracted out the professional administration of its employees. If the PEO obtains its employees from a franchisor, affiliation could still be found between the franchisor and the franchisee where a franchise agreement gives control of the franchisee's ''associates'' to the franchisor. In such cases, the receipts or employment of both the franchisor and the franchisee must be included in the calculation. This is a separate issue from what the clarification addresses, namely, how the firm (using the employees) calculates its size.

Affiliation and Professional Employer Organizations

SBA is also clarifying the language in 13 CFR 121.103(b)(4). Section (b) discusses exclusions from affiliation rules while paragraph (4) specifically excludes business concerns that lease employees. We are inserting ''Professional Employee Organizations (PEOs)'' in this section along with leasing companies. Their relationship with the firms to whom they provide employees and staffing services are similar, yet questions arise from time-to-time because PEOs were not specifically mentioned in the exclusion. SBA will not find a firm affiliated with a leasing company or PEO merely because it uses the services of a leasing company or PEO. However, SBA might find affiliation based on other conditions. Nothing in the clarification of the exclusions to the affiliation rule is intended to change the way a firm must count its employees when determining size. All employees must be counted; whether permanent, part-time, temporary, leased or covered by a contract with a PEO. How a firm obtains its staffing is a business decision, and size standards are not intended to influence its decision in that regard.

Compliance With Executive Orders 12866, 12988, and 13132, the Regulatory Flexibility Act (5 U.S.C. 601–612), and the Paperwork Reduction Act (44 U.S.C. 3501 et seq.)

SBA has determined that this rule will not be a significant rule within the meaning of Executive Order 12866 since it will not have an impact of $100 million or more. The total amount of Federal procurement and SBA guaranteed loans combined is less than $160 million to this industry annually, and a change to the size standard is unlikely to significantly affect these programs.

For purposes of the Regulatory Flexibility Act, this rule would not have a substantial impact on a significant number of small entities. Although potentially 576 additional firms could gain small business status as a result of this rule, only a very small percentage of firms in the industry compete for Federal procurements or obtain guaranteed loans through SBA's financial assistance programs.

For the purpose of the Paperwork Reduction Act, 44 U.S.C. 3501 *et seq.,* SBA has determined that this rule would not impose new reporting or record-keeping requirements other than those already required of SBA.

For purposes of Executive Order 13132, SBA has determined that this rule does not have any federalism implications warranting the preparation of a Federalism Assessment.

For purposes of Executive Order 12988, SBA certifies that this rule is drafted, to the extent practicable, in accordance with the standards set forth in Section 3 of that order.

List of Subjects in 13 CFR Part 121

Government procurement, Government property, Grant programs-business, Loan programs-business, Small businesses.

For reasons stated in the preamble, SBA is amending part 121 of 13 CFR as follows:

PART 121—SMALL BUSINESS SIZE REGULATIONS

1. The authority citation of Part 121 continues to read as follows:

Authority: 15 U.S.C. 632(a), 634(b)(6), 637(a), 644(c), and 662(5); and Sec. 304, Pub. L. 103–403, 108 Stat. 4175, 4188.

2. Revise § 121.103(b)(4), to read as follows:

§ 121.103 What is affiliation?

* * * * *

§ 121.201 Table [Amended]

(b) * * *

(4) Business concerns which lease employees from concerns primarily engaged in leasing employees to other businesses or which enter into a co-employer arrangement with a Professional Employer Organization (PEO) are not affiliated with the leasing company or PEO solely on the basis of a leasing agreement.

* * * * *

3. In § 121.201, in the table ''SIZE STANDARDS BY SIC INDUSTRY,'' under the heading DIVISION I—SERVICES, add a new entry for SEC Code 7363 in numerical order to read as follows:

SIZE STANDARDS BY SIC INDUSTRY

SIC code and description	Size standards in number of employees or millions of dollars
* * * * *	
DIVISION I—SERVICES	$5.0
* * * * *	
EXCEPT:	
* * * * *	
7363 Help Supply Services	10.0
* * * * *	

Dated: May 30, 2000.

Aida Alvarez,

Administrator.

[FR Doc. 00–14015 Filed 6–5–00; 8:45 am]

BILLING CODE 8025–01–P

DEPARTMENT OF TRANSPORTATION

Federal Aviation Administration

14 CFR Part 25

[Docket No. NM170; Special Conditions No. 25–162–SC]

Special Conditions: Raytheon Aircraft Company Model 4000; High Intensity Radiated Fields (HIRF)

AGENCY: Federal Aviation Administration (FAA), DOT.

ACTION: Final special conditions.

SUMMARY: These special conditions are issued for the Raytheon Aircraft Company Model 4000 airplane. This airplane will utilize new avionics/electronics and electrical systems that will perform critical functions. The applicable regulations do not contain adequate or appropriate safety standards for the protection of these systems from the effects of high-intensity radiated fields (HIRF). These special conditions contain the additional safety standards that the Administrator considers necessary to establish a level of safety equivalent to that provided by the existing airworthiness standards.

EFFECTIVE DATE: July 6, 2000.

FOR FURTHER INFORMATION CONTACT: Mark Quam, FAA, Standardization Branch, ANM–113, Transport Airplane Directorate, Aircraft Certification Service, 1601 Lind Avenue SW., Renton, Washington, 98055–4056; telephone (425) 227–2145; facsimile (425) 227–1149.

SUPPLEMENTARY INFORMATION:

Background

On May 3, 1996, Raytheon Aircraft Company, PO Box 85, Wichita, Kansas 67201–0085, submitted an application for a new type certificate for the Raytheon Model 4000. The significant aircraft design features include an 84 inch diameter graphite composite fuselage, new metal wing and a graphite composite skin on aluminum substructure empennage. The Model 4000 is 69 feet, 2 inches in length and 61 feet, 9 inches in width. It has a Primus Epic flightdeck, and two aft mounted PW308A engines. There are 12 forward-facing seats and a forward observer seat. The significant systems features include a new state of the art integrated avionics/electronics and electrical systems suite. The avionics/electronics and electrical systems installed in this airplane have the potential to be vulnerable to high-intensity radiated fields (HIRF) external to the airplane.

Type Certification Basis

Under the provisions of 14 CFR § 21.17, Raytheon Aircraft Company must show that the Model 4000 meets the applicable provisions of part 25, as amended by Amendment 25–1 through Amendment 25–87 thereto.

If the Administrator finds that the applicable airworthiness regulations (*i.e.,* part 25, as amended) do not contain adequate or appropriate safety standards for the Raytheon Aircraft Company Model 4000 airplane because of novel or unusual design features, special conditions are prescribed under the provisions of § 21.16.

In addition to the applicable airworthiness regulations and special conditions, the Model 4000 must comply with the fuel vent and exhaust emission requirements of part 34 and the noise certification requirements of part 36, and the FAA must issue a finding of regulatory adequacy pursuant to § 611 of Public Law 92–574, the ''Noise Control Act of 1972.''

Special conditions, as appropriate, are issued in accordance with § 11.49, after public notice, as required by §§ 11.28 and 11.29(b), and become part of the type certification basis in accordance with § 21.17(a)(2).

Special conditions are initially applicable to the model for which they are issued. Should the type certificate for that model be amended later to include any other model that incorporates the same novel or unusual design feature, the special conditions would also apply to the other model under the provisions of § 21.101(a)(1).

Novel or Unusual Design Features

The Raytheon Aircraft Company Model 4000 airplanes will utilize new avionics/electronics and electrical systems that will perform critical functions. These systems may be vulnerable to HIRF external to the airplane. The significant systems features include a new state of the art integrated avionics/electronics and electrical systems suite. The avionics/electronics and electrical systems installed in this aircraft have the potential to be vulnerable to high-intensity radiated fields (HIRF) external to the airplane.

Discussion

There is no specific regulation that addresses protection requirements for electrical and electronic systems from HIRF. Increased power levels from ground-based radio transmitters and the growing use of sensitive avionics/electronics and electrical systems to command and control airplanes have made it necessary to provide adequate protection.

To ensure that a level of safety is achieved equivalent to that intended by the regulations incorporated by reference, special conditions are needed for the Raytheon Aircraft Company Model 4000. These special conditions require that new avionics/electronics and electrical systems that perform critical functions be designed and installed to preclude component damage and interruption of function due to both the direct and indirect effects of HIRF.

High-Intensity Radiated Fields (HIRF)

With the trend toward increased power levels from ground-based transmitters, plus the advent of space and satellite communications coupled with electronic command and control of the airplane, and the use of composite material in the airplane structure, the immunity of critical avionics/electronics and electrical systems to HIRF must be established.

It is not possible to precisely define the HIRF to which the airplane will be exposed in service. There is also uncertainty concerning the effectiveness of airframe shielding for HIRF. Furthermore, coupling of electromagnetic energy to cockpit-installed equipment through the cockpit window apertures is undefined. Based on surveys and analysis of existing HIRF emitters, an adequate level of protection exists when compliance with the HIRF protection special condition is shown with either paragraph 1, or 2 below:

1. A minimum threat of 100 volts rms per meter electric field strength from 10 KHz to 18 GHz.

a. The threat must be applied to the system elements and their associated wiring harnesses without the benefit of airframe shielding.

b. Demonstration of this level of protection is established through system tests and analysis.

2. A threat external to the airframe for both of the following field strengths for the frequency ranges indicated. Both peak and average field strength components from the Table are to be demonstrated.

Frequency	Field strength (volts per meter)	
	Peak	Average
10 kHz–100 kHz	50	50
100 kHz–500 kHz	50	50
500 kHz–2 MHz	50	50
2 MHz–30 MHz	100	100
30 MHz–70 MHz	50	50
70 MHz–100 MHz	50	50
100 MHz–200 MHz	100	100
200 MHz–400 MHz	100	100
400 MHz–700 MHz	700	50
700 MHz–1 GHz	700	100
1 GHz–2 GHz	2000	200
2 GHz–4 GHz	3000	200
4 GHz–6 GHz	3000	200
6 GHz–8 GHz	1000	200
8 GHz–12 GHz	3000	300
12 GHz–18 GHz	2000	200
18 GHz–40 GHz	600	200

The field strengths are expressed in terms of peak of the root-mean-square (rms) over the complete modulation period.

The threat levels identified above are the result of an FAA review of existing studies on the subject of HIRF, in light of the ongoing work of the Electromagnetic Effects Harmonization Working Group of the Aviation Rulemaking Advisory Committee.

Discussion of Comments

Notice of proposed special conditions No. 25–00–01–SC for the Raytheon Aircraft Model 4000 airplanes was published in the **Federal Register** on March 14, 2000 (65 FR 13703). No comments were received, and the special conditions are adopted as proposed.

Applicability

As discussed above, these special conditions are applicable to the Model 4000 airplane. Should Raytheon Aircraft Company apply at a later date for a change to the type certificate to include another model incorporating the same novel or unusual design features, these special conditions would apply to that model as well under the provisions of § 21.101(a)(1).

Conclusion

This action affects only certain design features on the Raytheon Aircraft Company Model 4000 airplanes. It is not a rule of general applicability and affects only the applicant who applied to the FAA for approval of these features on the airplane.

List of Subjects in 14 CFR Part 25

Aircraft, Aviation safety, Reporting and recordkeeping requirements.

The authority citation for these special conditions is as follows:

Authority: 49 U.S.C. 106(g), 40113, 44701, 44702, 44704.

The Special Conditions

Accordingly, pursuant to the authority delegated to me by the Administrator, the following special conditions are issued as part of the type certification basis for Raytheon Aircraft Company Model 4000 airplanes.

1. *Protection from Unwanted Effects of High-Intensity Radiated Fields (HIRF).* Each electrical and electronic system that performs critical functions must be designed and installed to ensure that the operation and operational capability of these systems to perform critical functions are not adversely affected when the airplane is exposed to high intensity radiated fields.

2. For the purpose of this special condition, the following definition applies:

Critical Functions. Functions whose failure would contribute to or cause a failure condition that would prevent the continued safe flight and landing of the airplane.

Issued in Renton, Washington, on May 22, 2000.

Donald L. Riggin,

Acting Manager, Transport Airplane Directorate, Aircraft Certification Service.

[FR Doc. 00–14156 Filed 6–5–00; 8:45 am]

BILLING CODE 4910–13–U

DEPARTMENT OF TRANSPORTATION

Federal Aviation Administration

14 CFR Part 39

[Docket No. 94–ANE–16–AD; Amendment 39–11758; AD 2000–11–10]

RIN 2120–AA64

Airworthiness Directives; Rolls-Royce plc RB211 Series Turbofan Engines

AGENCY: Federal Aviation Administration, DOT.

ACTION: Final rule.

SUMMARY: This amendment supersedes an existing airworthiness directive (AD) applicable to certain Rolls-Royce plc (R–R) RB211 series turbofan engines. That AD currently requires the removal from service of intermediate pressure (IP) compressor stage 6–7 rotor shafts that exceed reduced cyclic life limits. This amendment requires further reduction of cyclic life limits and introduction of new reduced cyclic bands for rework. This action is prompted by additional stress analysis conducted following failure of an IP compressor stage 6 disk. The actions specified by this AD are intended to prevent an uncontained engine failure due to rupture of an IP compressor stage 6–7 rotor shaft.

DATES: Effective August 7, 2000. The incorporation by reference of certain publications listed in the rule is approved by the Director of the Federal Register as of August 7, 2000.

ADDRESSES: The service information referenced in this AD may be obtained from Rolls-Royce plc, Technical Publications Department, P.O. Box 31, Derby, DE24 8BJ, UK, telephone 011–44–1332–242424. This information may be examined at the Federal Aviation Administration (FAA), New England Region, Office of the Regional Counsel, 12 New England Executive Park, Burlington, MA, or at the Office of the Federal Register, 800 North Capitol Street, NW., suite 700, Washington, DC.

FOR FURTHER INFORMATION CONTACT: Jason Yang, Aerospace Engineer, Engine Certification Office, FAA, Engine and Propeller Directorate, 12 New England Executive Park, Burlington, MA 01803–5299; telephone (781) 238–7747, fax (781) 238–7199.

SUPPLEMENTARY INFORMATION: A proposal to amend part 39 of the Federal Aviation Regulations (14 CFR part 39) by superseding AD 94–18–03, Amendment 39–9016 (59 FR 46536), applicable to R–R RB211–22B and –524 series turbofan engines, was published in the **Federal Register** on August 31, 1999 (64 FR 47447). That action proposed to require the removal from service of IP compressor stage 6–7 rotor shafts that exceed reduced cyclic life limits.

Conclusion

Interested persons have been afforded an opportunity to participate in the making of this amendment. No comments were received on the proposal or the FAA's determination of the cost to the public. The FAA has determined that air safety and the public interest require the adoption of the rule as proposed.

Economic Analysis

There are approximately 1,300 engines of the affected design in the worldwide fleet. The manufacturer has advised the FAA that there are 228 engines installed on aircraft of U.S. registry that will be affected by this AD. It will take approximately 24 work hours or $1,440 per engine to accomplish the proposed rework actions, if rework of the rotor shafts is selected. Otherwise, to maintain the record of the cyclic life of IP compressor stage 6–7 rotor shafts has minimum economic impact on U.S operators. Based on these figures, the total cost impact of the AD on U.S. operators is estimated to be less than $330,000.

Regulatory Impact

This final rule does not have federalism implications, as defined in Executive Order 13132, because it does not have a substantial direct effect on the States, on the relationship between the national government and the States, or on the distribution of power and responsibilities among the various levels of government. Accordingly, the FAA has not consulted with state authorities prior to publication of this final rule.

For the reasons discussed above, I certify that this action: (1) Is not a ''significant regulatory action'' under Executive Order 12866; (2) is not a ''significant rule'' under DOT Regulatory Policies and Procedures (44 FR 11034, February 26, 1979); and (3) will not have a significant economic impact, positive or negative, on a substantial number of small entities under the criteria of the Regulatory Flexibility Act. A final evaluation has been prepared for this action and is contained in the Rules Docket. A copy of it may be obtained from the Rules Docket at the location provided under the caption **ADDRESSES**.

List of Subjects in 14 CFR Part 39

Air transportation, Aircraft, Aviation safety, Incorporation by reference, Safety.

Adoption of the Amendment

Accordingly, pursuant to the authority delegated to me by the Administrator, the Federal Aviation Administration amends part 39 of the Federal Aviation Regulations (14 CFR part 39) as follows:

PART 39—AIRWORTHINESS DIRECTIVES

1. The authority citation for part 39 continues to read as follows:

Authority: 49 U.S.C. 106(g), 40113, 44701.

§ 39.13 [Amended]

2. Section 39.13 is amended by removing amendment 39–9016 (59 FR 46536, September 9, 1994) and by adding a new airworthiness directive to read as follows:

2000–11–10 Rolls-Royce plc: Amendment 39–11758. Docket No. 94–ANE–16–AD. Supersedes AD 94–18–03, Amendment 39–9016.

Applicability

Rolls-Royce plc (R–R) Model RB211–22B and –524 series turbofan engines, not incorporating new intermediate pressure (IP) compressor stage 6–7 rotor shafts assemblies with redesigned stage 6 disks in accordance with R–R Service Bulletin (SB) No. RB.211–72–9993, dated August 26, 1994. These engines are installed on but not limited to Boeing 747 series and 767 series, and Lockheed L–1011 series aircraft.

Note 1: This airworthiness directive (AD) applies to each engine identified in the preceding applicability provision, regardless of whether it has been modified, altered, or repaired in the area subject to the requirements of this AD. For engines that have been modified, altered, or repaired so that the performance of the requirements of this AD is affected, the owner/operator must request approval for an alternative method of compliance in accordance with paragraph (e) of this AD. The request should include an assessment of the effect of the modification, alteration, or repair on the unsafe condition addressed by this AD; and, if the unsafe condition has not been eliminated, the request should include specific proposed actions to address it.

Compliance

Required as indicated, unless previously accomplished.

To prevent an uncontained engine failure due to rupture of an IP compressor stage 6–7 rotor shaft, accomplish the following:

Corrective Action

(a) For IP compressor stage 6–7 rotor shafts that have not been reworked in accordance with SB RB.211–72–9594, Revision 8, dated January 14, 1999, Revision 7, dated September 16, 1994, Revision 6, dated August 12, 1994, or Revision 5, dated February 12, 1993, remove the rotor shafts prior to exceeding the life limits established in Table 1 of this AD under sub-title ''Pre SB72–9594'' and replace with serviceable parts.

TABLE 1

Engine mark and mod standard	Pre SB72–9594			Rework bands			Post SB72–9594			Post SB72–9618		
	Life limits through 12/31/00	Life limits after 12/31/00	Life limits after 12/31/01	Rework bands through 12/31/00	Rework bands after 12/31/00	Rework bands after 12/31/01	Life limits through 12/31/00	Life limits after 12/31/00	Life limits after 12/31/01	Life limits through 12/31/00	Life limits after 12/31/00	Life limits after 12/31/01
RB.211–22B–02 Pre SB72–5787 and Pre SB72–8700 ...	11000	10000	9000	8000–11000	7500–10000	7500–9000	18000	17600	16600	N/A	N/A	N/A
RB.211–22B–02 Pre SB72–5787 and Post SB72–8700 ..	11000	10000	10000	8000–11000	7500–10000	7500–10000	17310	16960	15960	N/A	N/A	N/A
RB.211–22B–02 Post SB72–5787 and Pre SB72–8700	11000	11000	11000	8000–11000	8000–11000	8000–11000	18000	18000	18000	N/A	N/A	N/A
RB.211–22B–02 Post SB72–5787 and Post SB72–8700	11000	11000	11000	8000–11000	8000–11000	8000–11000	17310	17310	17310	N/A	N/A	N/A
RB.211–524B–02 RB.211–524B3–02 RB.211–524B4–02 Pre SB72–5787 ...	7500	7250	6250	6000–7500	4750–7250	4750–6250	13500	13500	12750	17500	17500	17500
RB.211–524B–02 RB.211–524B3–02 RB.211–524B4–02 Post SB72–5787 ..	8500	8200	7200	6500–8500	5700–8200	5700–7200	15000	14700	13700	19000	19000	18000

TABLE 1—Continued

Engine mark and mod standard	Pre SB72–9594			Rework bands			Post SB72–9594			Post SB72–9618		
	Life limits through 12/31/00	Life limits after 12/31/00	Life limits after 12/31/01	Rework bands through 12/31/00	Rework bands after 12/31/00	Rework bands after 12/31/01	Life limits through 12/31/00	Life limits after 12/31/00	Life limits after 12/31/01	Life limits through 12/31/00	Life limits after 12/31/00	Life limits after 12/31/01
RB.211–524B–B–02 RB.211–524B4–D–02 Pre SB72–5787	7500	7500	7400	6000–7500	6000–7500	5500–7400	13500	13500	13500	17500	17500	17500
RB.211–524B–B–02 RB.211–524B4–D–02 Post SB72–5787	8500	8200	7200	6500–8500	5700–8200	5700–7200	15000	14700	13700	19000	19000	18000
RB211–524B2 RB211–524C2 RB211–524D4 RB211–524D4X Pre SB72–5787	7500	7500	7300	6000–7500	6000–7500	5800–7300	13500	13500	13500	17500	17500	17500
RB.211–524B2 RB.211–524C2 RB.211–524D4 RB.211–524D4X Post SB72–5787	8500	8250	7250	6500–8500	5800–8250	5800–7250	15000	14500	13500	19000	18750	17750
RB.211–524B2–B RB.211–524C2–B Pre SB72–5787	7500	7500	7300	6000–7500	6000–7500	5800–7300	13500	13500	13500	17500	17500	17500
RB.211–524B2–B RB.211–524C2–B Post SB72–5787	8500	8200	7250	6500–8500	5800–8200	5800–7250	15000	14500	13500	19000	18650	17650
RB.211–524D4–B RB.211–524D4X–B Post SB72–5787	8500	8500	7750	6500–8500	6500–8500	5750–7750	15000	15000	15000	19000	19000	19000
RB.211–524G RB.211–524G–T RB.211–524H RB.211–524H–T Post SB72–5787	8500	8150	7150	6500–8500	5750–8150	5750–7150	13950	13950	13950	N/A	N/A	N/A

(b) Remove from service IP stage 6–7 rotor shafts that have been reworked in accordance with R–R SB RB.211–72–9594, Revision 8, dated January 14, 1999, Revision 7, dated September 16, 1994, Revision 6, dated August 12, 1994, or Revision 5, dated February 12, 1993, prior to exceeding the new, reduced cyclic life listed in Table 1 of this AD under the sub-title ''Post SB72–9594'' and replace with serviceable parts.

(c) Remove from service IP compressor stage 6–7 rotor shafts that have been reworked in accordance with R–R SB RB.211–72–9618, dated August 7, 1992, prior to exceeding the new, reduced cyclic life limits listed in Table 1 of this AD under the sub-title ''Post SB72–9618'' and replace with serviceable parts.

(d) IP compressor stage 6–7 rotor shaft rework in accordance with R–R SB RB.211–72–9594 can only be accomplished when the cyclic life of the part falls within the rework bands established in Table 1 of this AD. To accomplish rework of IP compressor stage 6–7 rotor shafts prior to reaching the lower limit of the rework bands specified in Table 1 of this AD, the part must be artificially aged to the cyclic life which defines the lower limit of the applicable rework bands in Table 1 of this AD.

Note 2: For example, if the lower limit of the rework band is 8,000 cycles, and the part is reworked at 7,000 cycles, the part must be artificially aged by adding 1,000 cycles to the cycles since new recorded on the part; i.e., on return to service the cycles since new on this part would be 8,000 cycles.

Alternative Method of Compliance

(e) An alternative method of compliance or adjustment of the compliance time that provides an acceptable level of safety may be used if approved by the Manager, Engine Certification Office. Operators shall submit their request through an appropriate FAA Principal Maintenance Inspector, who may add comments and then send it to the Manager, Engine Certification Office.

Note 3: Information concerning the existence of approved alternative methods of compliance with this airworthiness directive, if any, may be obtained from the Engine Certification Office.

Ferry Flights

(f) Special flight permits may be issued in accordance with § § 21.197 and 21.199 of the Federal Aviation Regulations (14 CFR 21.197 and 21.199) to operate the aircraft to a location where the requirements of this AD can be accomplished.

Incorporation By Reference

(g) The actions of this AD shall be done in accordance with the following R–R Service Bulletins:

Document No.	Pages	Revision	Date
RB.211–72–9993	1–6	Original	August 26, 1994.
Supplement	1 of 1	Original	August 26, 1994.
Modification Acceptance		Original	August 26, 1994.
Total pages: 8			
RB.211–72–9594	1–4	8	January 14, 1999.
	4A	8	January 14, 1999.
	5–6	8	January 14, 1999.
	6A	2	May 8, 1992.
	7	6	August 12, 1994.
	8–8A	8	January 14, 1999.
	9	2	May 8, 1992.
	10–11	6	August 12, 1994.

Document No.	Pages	Revision	Date
	12–12A	8	January 14, 1999.
	13–15	7	September 16, 1994.
	16–18	Original	February 5, 1992.
	19–20	4	November 13, 1992.
	21–26	6	August 12, 1994.
	27	7	September 16, 1994.
Appendix	1–4	5	February 12, 1993.
	5	Original	February 5, 1992.
Supplement	1–2	1	August 12, 1994.
Total pages: 38			
RB.211–72–9618	1–6	2	January 14, 1999.
Total pages: 6			

This incorporation by reference was approved by the Director of the Federal Register in accordance with 5 U.S.C. 552(a) and 1 CFR part 51. Copies may be obtained from Rolls-Royce plc, P.O. Box 31, Derby, DE24 8BJ, UK, telephone 011–44–1332–242424. Copies may be inspected at the FAA, New England Region, Office of the Regional Counsel, 12 New England Executive Park, Burlington, MA; or at the Office of the Federal Register, 800 North Capitol Street, NW., suite 700, Washington, DC.

Effective Date

(h) This amendment becomes effective on August 7, 2000.

Issued in Burlington, Massachusetts, on May 23, 2000.

Thomas A. Boudreau,

Acting Manager, Engine and Propeller Directorate, Aircraft Certification Service.

[FR Doc. 00–13566 Filed 6–5–00; 8:45 am]

BILLING CODE 4910–13–U

DEPARTMENT OF TRANSPORTATION

Federal Aviation Administration

14 CFR Part 39

[Docket No. 99–NM–358–AD; Amendment 39–11761; AD 2000–11–13]

RIN 2120–AA64

Airworthiness Directives; Fokker Model F.28 Mark 1000, 2000, 3000, and 4000 Series Airplanes

AGENCY: Federal Aviation Administration, DOT.

ACTION: Final rule.

SUMMARY: This amendment adopts a new airworthiness directive (AD), applicable to certain Fokker Model F.28 Mark 1000, 2000, 3000, and 4000 series airplanes, that requires a one-time review of the maintenance records to determine if tripping of the fuel boost pump circuit breakers has been recorded, repetitive inspections to detect fuel leakage from the fuel boost pump wiring conduits, and corrective actions, if necessary. This amendment also requires replacement of the three single wires inside the metal conduit of the fuel boost pumps with new wires protected by a polyamide sleeve, which terminates the repetitive inspections. This amendment is prompted by issuance of mandatory continuing airworthiness information by a foreign civil airworthiness authority. The actions specified by this AD are intended to prevent the fuel boost pump wiring from chafing, which could result in electrical arcing and a possible fuel tank ignition source.

DATES: Effective July 11, 2000.

The incorporation by reference of certain publications listed in the regulations is approved by the Director of the Federal Register as of July 11, 2000.

ADDRESSES: The service information referenced in this AD may be obtained from Fokker Services B.V., P.O. Box 231, 2150 AE Nieuw-Vennep, the Netherlands. This information may be examined at the Federal Aviation Administration (FAA), Transport Airplane Directorate, Rules Docket, 1601 Lind Avenue, SW., Renton, Washington; or at the Office of the Federal Register, 800 North Capitol Street, NW., suite 700, Washington, DC.

FOR FURTHER INFORMATION CONTACT: Norman B. Martenson, Manager, International Branch, ANM–116, FAA, Transport Airplane Directorate, 1601 Lind Avenue, SW., Renton, Washington 98055–4056; telephone (425) 227–2110; fax (425) 227–1149.

SUPPLEMENTARY INFORMATION: A proposal to amend part 39 of the Federal Aviation Regulations (14 CFR part 39) to include an airworthiness directive (AD) that is applicable to certain Fokker Model F.28 Mark 1000, 2000, 3000, and 4000 series airplanes was published in the **Federal Register** on February 8, 2000 (65 FR 6046). That action proposed to require a one-time review of the maintenance records to determine if tripping of the fuel boost pump circuit breakers has been recorded, repetitive inspections to detect fuel leakage from the fuel boost pump wiring conduits, and corrective actions, if necessary. That action also proposed to require replacement of the three single wires inside the metal conduit sleeve of the fuel boost pumps with new wires protected by a polyamide sleeve, which would terminate the repetitive inspections.

Comments Received

Interested persons have been afforded an opportunity to participate in the making of this amendment. Due consideration has been given to the comments received.

Type Certificate Holder

One commenter requests that the Discussion and Explanation of Relevant Service Information sections be revised to refer to Fokker Services B.V. as the current type certificate holder, rather than the now defunct airplane manufacturer. The commenter advises that Fokker Services B.V. is conducting the Fuel System Safety Program mentioned in the Discussion section, and is also the issuer of the relevant service information. The FAA acknowledges the accuracy of this information; however, since these sections are not repeated in the final rule, no change is made to the AD.

Statement of Unsafe Condition

The same commenter requests that the statement of unsafe condition be corrected in several areas of the proposed AD. The commenter notes that electrical arcing has only been observed between the metal conduit and the fuel boost pump wiring, and states that the description of the unsafe condition should be revised to remove the statement that such arcing ''could result in a possible fuel tank ignition source.'' The commenter states that since no arc-through of the metal conduit has been observed, and the conduit is submerged in fuel during all phases of flight, it is very unlikely that the arcing could serve as an ignition source for the fuel vapors inside the fuel tank. The commenter

requests that the Summary, Discussion, and Compliance sections of the AD be revised to eliminate such a statement, and suggests that the actions required by the proposed AD are instead intended to prevent repetitive electrical arcing between damaged fuel boost pump wiring and the metal conduit, ignition of fuel vapors within the metal conduit, and/or chafing of the fuel boost pump wiring.

The FAA does not concur. Although the commenter states that it is very unlikely that the arcing could lead to an ignition source for the fuel vapors inside the fuel tank, insufficient data were provided to the FAA to demonstrate that such arcing could not create an ignition source in the fuel tank. Additionally, although other conditions will be prevented by accomplishment of the actions required by this AD, the possible ignition of fuel vapors is the unsafe condition being addressed by this AD. No change is made to the final rule.

Reference to Metal Conduit

The same commenter requests that the phrase ''replacement of the three single wires inside the metal conduit sleeve'' in the Summary section of the proposed AD be revised to delete the word ''sleeve'' to describe the replacement more accurately. The FAA concurs. The use of the word ''sleeve'' in this context was an inadvertent error in terminology, although the replacement is described accurately in the text of the AD. The Summary section of the final rule has been revised accordingly.

Description of Service Information

The same commenter requests that the Explanation of Relevant Service Information section be revised in several areas pertaining to the description of the procedures contained in Part 2, Paragraph D., of the Accomplishment Instructions of Fokker Service Bulletin SBF28/28–046, dated September 1, 1999. The commenter's suggestions include expanding the description of the corrective actions to list all such actions, and clarifying that certain actions are to be accomplished subsequent to and depending on the results of the resistance check. The FAA acknowledges that more detailed descriptions of all corrective actions could have been included, but has determined that the description provided in the proposed AD was sufficient to give adequate notice to operators concerning required actions. Since this information is not retained in the final rule, no change is made to the AD in this regard.

Conclusion

After careful review of the available data, including the comments noted above, the FAA has determined that air safety and the public interest require the adoption of the rule with the change described previously. The FAA has determined that this change will neither increase the economic burden on any operator nor increase the scope of the AD.

Cost Impact

The FAA estimates that 22 airplanes of U.S. registry will be affected by this AD, that it will take approximately 1 work hour per airplane to accomplish the required review of the maintenance records, and that the average labor rate is $60 per work hour. Based on these figures, the cost impact of the review on U.S. operators is estimated to be $1,320, or $60 per airplane.

It will take approximately 3 work hours per airplane to accomplish the required repetitive inspection, at an average labor rate of $60 per work hour. Based on these figures, the cost impact of the inspection required by this AD on U.S. operators is estimated to be $3,960, or $180 per airplane, per inspection cycle.

It will take approximately 33 work hours per airplane to accomplish the required modification, at an average labor rate of $60 per work hour. Required parts will cost approximately $1,355 per airplane. Based on these figures, the cost impact of the modification required by this AD on U.S. operators is estimated to be $73,370, or $3,335 per airplane.

The cost impact figures discussed above are based on assumptions that no operator has yet accomplished any of the requirements of this AD action, and that no operator would accomplish those actions in the future if this AD were not adopted.

Regulatory Impact

The regulations adopted herein will not have a substantial direct effect on the States, on the relationship between the national Government and the States, or on the distribution of power and responsibilities among the various levels of government. Therefore, it is determined that this final rule does not have federalism implications under Executive Order 13132.

For the reasons discussed above, I certify that this action: (1) Is not a ''significant regulatory action'' under Executive Order 12866; (2) is not a ''significant rule'' under DOT Regulatory Policies and Procedures (44 FR 11034, February 26, 1979); and (3) will not have a significant economic impact, positive or negative, on a substantial number of small entities under the criteria of the Regulatory Flexibility Act. A final evaluation has been prepared for this action and it is contained in the Rules Docket. A copy of it may be obtained from the Rules Docket at the location provided under the caption **ADDRESSES.**

List of Subjects in 14 CFR Part 39

Air transportation, Aircraft, Aviation safety, Incorporation by reference, Safety.

Adoption of the Amendment

Accordingly, pursuant to the authority delegated to me by the Administrator, the Federal Aviation Administration amends part 39 of the Federal Aviation Regulations (14 CFR part 39) as follows:

PART 39—AIRWORTHINESS DIRECTIVES

1. The authority citation for part 39 continues to read as follows:

Authority: 49 U.S.C. 106(g), 40113, 44701.

§ 39.13 [Amended]

2. Section 39.13 is amended by adding the following new airworthiness directive:

2000–11–13 Fokker Services B.V.: Amendment 39–11761. Docket 99–NM–358—AD.

Applicability: Model F.28 Mark 1000, 2000, 3000, and 4000 series airplanes having serial numbers 11003 through 11241 inclusive and 11991 through 11994 inclusive, certificated in any category.

Note 1: This AD applies to each airplane identified in the preceding applicability provision, regardless of whether it has been modified, altered, or repaired in the area subject to the requirements of this AD. For airplanes that have been modified, altered, or repaired so that the performance of the requirements of this AD is affected, the owner/operator must request approval for an alternative method of compliance in accordance with paragraph (f) of this AD. The request should include an assessment of the effect of the modification, alteration, or repair on the unsafe condition addressed by this AD; and, if the unsafe condition has not been eliminated, the request should include specific proposed actions to address it.

Compliance: Required as indicated, unless accomplished previously.

To prevent the fuel boost pump wiring from chafing, which could result in electrical arcing and a possible fuel tank ignition source, accomplish the following:

Inspections and Corrective Actions

(a) Within 30 days after the effective date of this AD, perform a one-time inspection of the maintenance records of the airplane to determine if tripping of the fuel boost pump

circuit breakers has been reported within the last 30 days, in accordance with Part 1 of the Accomplishment Instructions of Fokker Service Bulletin SBF28/28–046, dated September 1, 1999.

(b) If resettable or unresettable tripping of the circuit breaker of the fuel boost pump is reported during the inspection required by paragraph (a) of this AD, or if such tripping is reported at any time subsequent to that inspection: Within 10 days after the date of the inspection or any occurrence, accomplish the applicable repair (including a resistance check and inspections of the wire and conduit for discrepancies), in accordance with Part 2 of the Accomplishment Instructions of Fokker Service Bulletin SBF28/28–046, dated September 1, 1999. If any discrepancy is detected during any inspection performed during the repair, prior to further flight, repair in accordance with the service bulletin.

(c) In the event of any resettable or unresettable tripping of the circuit breakers of the fuel boost pump as indicated in paragraph (b) of this AD, the airplane may be operated for a period not to exceed 10 days after the occurrence, provided the circuit breaker of the fuel boost pump and fuel boost pump switch have been properly deactivated and placarded for flightcrew awareness, in accordance with the FAA-approved Master Minimum Equipment List (MMEL).

(d) Within 30 days after the effective date of this AD, perform a general visual inspection to detect signs of fuel leakage from the wiring conduits of the fuel boost pumps, in accordance with Part 1 of the Accomplishment Instructions of Fokker Service Bulletin F28/28–046, dated September 1, 1999. If any fuel leakage is detected during the inspection, prior to further flight, isolate the fuel leak, and repair in accordance with Part 2 of the Accomplishment Instructions of the service bulletin. Thereafter, repeat the inspection at intervals not to exceed 90 days.

Note 2: For the purposes of this AD, a general visual inspection is defined as: ''A visual examination of an interior or exterior area, installation, or assembly to detect obvious damage, failure, or irregularity. This level of inspection is made under normally available lighting conditions such as daylight, hangar lighting, flashlight, or drop-light, and may require removal or opening of access panels or doors. Stands, ladders, or platforms may be required to gain proximity to the area being checked.''

Replacement of Wires

(e) Replace the existing three single wires (including inspections) inside the metal conduits of the fuel boost pumps with three twisted wires protected by a polyamide braided wire sleeve, in accordance with Part 3 of the Accomplishment Instructions of Fokker Service Bulletin F28/28–046, dated September 1, 1999, at the time specified in paragraph (e)(1) or (e)(2) of this AD, as applicable. If any discrepancy is detected during any inspection required by this paragraph, prior to further flight, repair in accordance with the service bulletin. Accomplishment of the actions required by this paragraph constitutes terminating action for the actions required by this AD.

(1) For airplanes that have accumulated less than 40,000 total flight hours as of the effective date of this AD: Within 2 years after the effective date of this AD.

(2) For airplanes that have accumulated 40,000 or more total flight hours as of the effective date of this AD: Within 1 year after the effective date of this AD.

Alternative Methods of Compliance

(f) An alternative method of compliance or adjustment of the compliance time that provides an acceptable level of safety may be used if approved by the Manager, International Branch, ANM–116, FAA, Transport Airplane Directorate. Operators shall submit their requests through an appropriate FAA Principal Maintenance Inspector, who may add comments and then send it to the Manager, International Branch, ANM–116.

Note 3: Information concerning the existence of approved alternative methods of compliance with this AD, if any, may be obtained from the International Branch, ANM–116.

Special Flight Permits

(g) Special flight permits may be issued in accordance with §§ 21.197 and 21.199 of the Federal Aviation Regulations (14 CFR 21.197 and 21.199) to operate the airplane to a location where the requirements of this AD can be accomplished.

Incorporation by Reference

(h) The actions shall be done in accordance with Fokker Service Bulletin SBF28/28–046, dated September 1, 1999. This incorporation by reference was approved by the Director of the Federal Register in accordance with 5 U.S.C. 552(a) and 1 CFR part 51. Copies may be obtained from Fokker Services B.V., P.O. Box 231, 2150 AE Nieuw-Vennep, the Netherlands. Copies may be inspected at the FAA, Transport Airplane Directorate, 1601 Lind Avenue, SW., Renton, Washington; or at the Office of the Federal Register, 800 North Capitol Street, NW., suite 700, Washington, DC.

Note 4: The subject of this AD is addressed in Dutch airworthiness directive BLA 1999–114, dated September 13, 1999.

(i) This amendment becomes effective on July 11, 2000.

Issued in Renton, Washington, on May 25, 2000.

Donald L. Riggin,

Acting Manager, Transport Airplane Directorate, Aircraft Certification Service.

[FR Doc. 00–13694 Filed 6–5–00; 8:45 am]

BILLING CODE 4910–13–U

DEPARTMENT OF TRANSPORTATION

Federal Aviation Administration

14 CFR Part 39

[Docket No. 99–SW–62–AD; Amendment 39–11766; AD 2000–11–18]

RIN 2120–AA64

Airworthiness Directives; Eurocopter France Model SA–365C, C1, C2, N, and N1; AS–365N2 and N3; and SA–366G1 Helicopters

AGENCY: Federal Aviation Administration, DOT.

ACTION: Final rule.

SUMMARY: This amendment supersedes an existing airworthiness directive (AD) that applies to Eurocopter France Model SA–365C, C1, C2, N, and N1; AS–365N2, and SA–366G1 helicopters. That AD currently requires inspecting the tightening torque of the main rotor hub blade attach beam spherical thrust bearing bolts (bolts) and either applying a specified torque or, if necessary, inspecting for a crack in the metal components. That AD also requires replacing the spherical thrust bearing (bearing) with an airworthy bearing if a crack is found. This amendment requires the same actions as the existing AD, but adds the Eurocopter France Model AS–365N3 helicopter to the applicability. This amendment is prompted by reports of cracks in the metal components of the bearing attachment joint and the need to add the Eurocopter France Model AS–365N3 helicopter to the applicability. The actions specified by this AD are intended to prevent loosening of bearing bolts in flight, which may cause cracks in the metal components, failure of the bearing, and subsequent loss of control of the helicopter.

EFFECTIVE DATE: July 11, 2000.

FOR FURTHER INFORMATION CONTACT: Paul Madej, Aviation Safety Engineer, FAA, Rotorcraft Directorate, Regulations Group, 2601 Meacham Blvd., Fort Worth, Texas 76137, telephone (817) 222–5125, fax (817) 222–5961.

SUPPLEMENTARY INFORMATION: A proposal to amend part 39 of the Federal Aviation Regulations (14 CFR part 39) by superseding AD 99–21–24, Amendment 39–11369 (64 FR 55621, October 14, 1999), which applies to Eurocopter France Model SA–365C, C1, C2, N, and N1; AS–365N2, and SA–366G1 helicopters, was published in the **Federal Register** on February 29, 2000 (65 FR 10727). That action proposed to require requires the same actions as the existing AD, but adds the Eurocopter

France Model AS–365N3 helicopter to the applicability.

Interested persons have been afforded an opportunity to participate in the making of this amendment. No comments were received on the proposal or the FAA's determination of the cost to the public. The FAA has determined that air safety and the public interest require the adoption of the rule as proposed.

The FAA estimates that 101 helicopters of U.S. registry will be affected by this AD, that it will take approximately 0.5 work hour per helicopter and approximately 3,000 inspections per helicopter over the life of the fleet to accomplish the required actions, and that the average labor rate is $60 per work hour. Required parts will cost approximately $3,000 per helicopter. Based on these figures, the total cost impact of the AD on U.S. operators is estimated to be $9,123,000, assuming 11 ship sets of bearings are replaced on the fleet.

The regulations adopted herein will not have a substantial direct effect on the States, on the relationship between the national Government and the States, or on the distribution of power and responsibilities among the various levels of government. Therefore, it is determined that this final rule does not have federalism implications under Executive Order 13132.

For the reasons discussed above, I certify that this action: (1) Is not a ''significant regulatory action'' under Executive Order 12866; (2) is not a ''significant rule'' under DOT Regulatory Policies and Procedures (44 FR 11034, February 26, 1979); and (3) will not have a significant economic impact, positive or negative, on a substantial number of small entities under the criteria of the Regulatory Flexibility Act. A final evaluation has been prepared for this action and it is contained in the Rules Docket. A copy of it may be obtained from the Rules Docket at the FAA, Office of the Regional Counsel, Southwest Region, 2601 Meacham Blvd., Room 663, Fort Worth, Texas.

List of Subjects in 14 CFR Part 39

Air transportation, Aircraft, Aviation safety, Safety.

Adoption of the Amendment

Accordingly, pursuant to the authority delegated to me by the Administrator, the Federal Aviation Administration amends part 39 of the Federal Aviation Regulations (14 CFR part 39) as follows:

PART 39—AIRWORTHINESS DIRECTIVES

1. The authority citation for part 39 continues to read as follows:

Authority: 49 U.S.C. 106(g), 40113, 44701.

§ 39.13 [Amended]

2. Section 39.13 is amended by removing Amendment 39–11369 (64 FR 55621, October 14, 1999), and by adding a new airworthiness directive (AD), Amendment 39–11766, to read as follows:

2000–11–18 Eurocopter France: Amendment 39–11766. Docket No. 99-SW–62–-AD. Supersedes AD 99–21–24, Amendment 39–11369, Docket No. 98–SW–75–AD.

Applicability: Eurocopter France Model SA–365C, C1, C2, N, and N1; AS–365N2 and N3; and SA–366G1 helicopters, certificated in any category.

Note 1: This AD applies to each helicopter identified in the preceding applicability provision, regardless of whether it has been otherwise modified, altered, or repaired in the area subject to the requirements of this AD. For helicopters that have been modified, altered, or repaired so that the performance of the requirements of this AD is affected, the owner/operator must request approval for an alternative method of compliance in accordance with paragraph (b) of this AD. The request should include an assessment of the effect of the modification, alteration, or repair on the unsafe condition addressed by this AD; and, if the unsafe condition has not been eliminated, the request should include specific proposed actions to address it.

Compliance: Required within 550 hours time-in-service (TIS), unless accomplished previously, and thereafter at intervals not to exceed 550 hours TIS.

To prevent loosening of the main rotor hub blade attach beam spherical thrust bearing bolts (bolts), cracks in the metal components, failure of a spherical thrust bearing (bearing), and subsequent loss of control of the helicopter, accomplish the following:

(a) Inspect the tightening torque of the bolts as indicated by ''A'' in Figure 1.

(1) If tightening torque is equal to or less than 12 m.daN (88.4 lb-ft), remove the bearing and conduct a dye penetrant inspection for cracks on the two contact surfaces identified as ''H'' in Figure 1.

(i) If a crack is detected, replace the bearing with an airworthy bearing.

(ii) If no crack is detected, reinstall the bearing.

Note 2: Eurocopter France Service Bulletins 05.22, 05.24, and 05.00.39, all dated July 17, 1998, pertain to the subject of this AD.

(2) If the tightening torque is greater than 12 m.daN (88.4 lb-ft), then tighten the torque to 19–22 m.daN (140–162.2 lb-ft).

BILLING CODE 4910–13–U

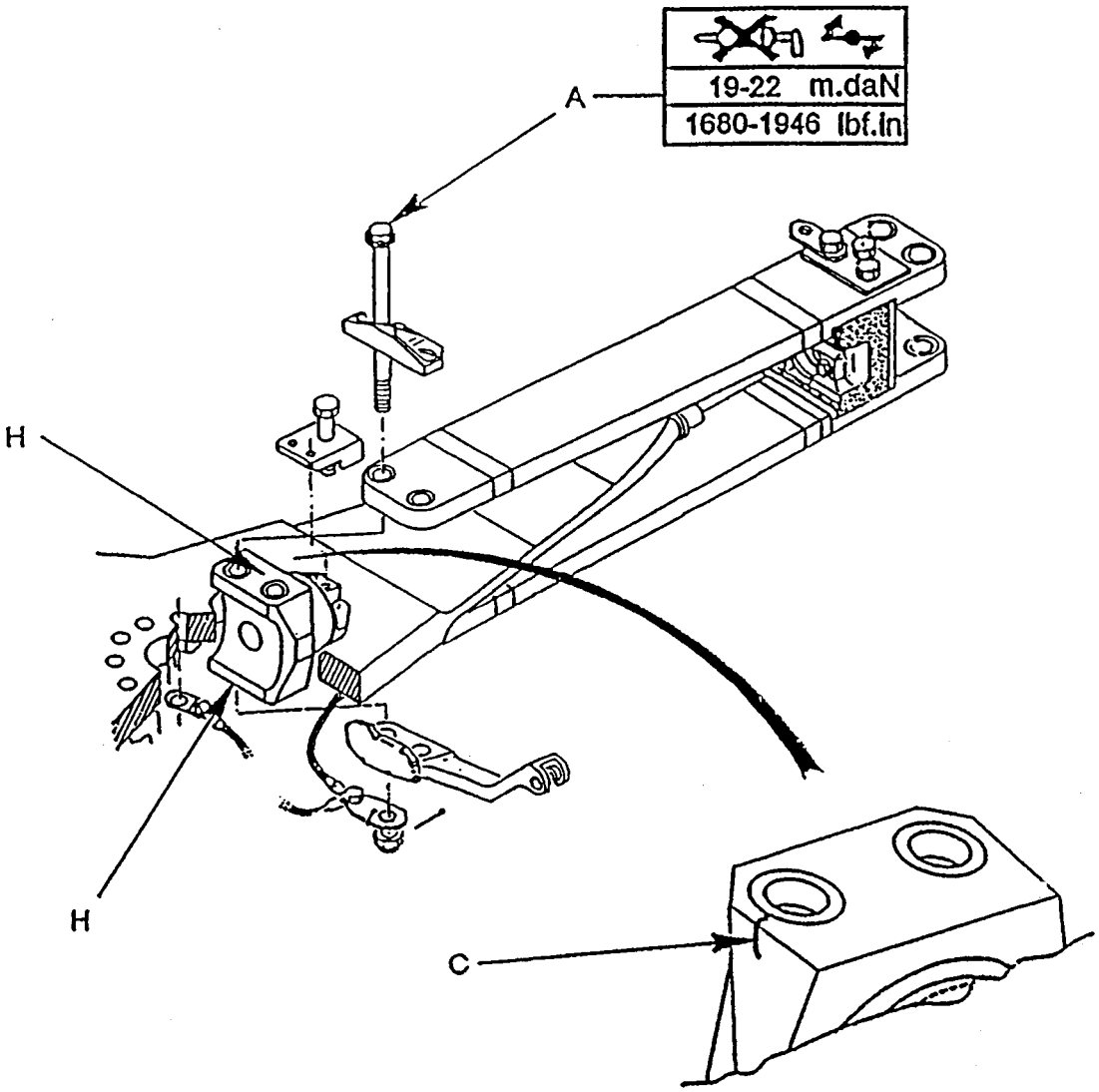

Figure 1

BILLING CODE 4910–13–C

(b) An alternative method of compliance or adjustment of the compliance time that provides an acceptable level of safety may be used if approved by the Manager, Regulations Group, Rotorcraft Directorate, FAA. Operators shall submit their requests through an FAA Principal Maintenance Inspector, who may concur or comment and then send it to the Manager, Regulations Group.

Note 3: Information concerning the existence of approved alternative methods of compliance with this AD, if any, may be obtained from the Regulations Group.

(c) Special flight permits may be issued in accordance with §§ 21.197 and 21.199 of the Federal Aviation Regulations (14 CFR 21.197 and 21.199) to operate the helicopter to a location where the requirements of this AD can be accomplished.

(d) This amendment becomes effective on July 11, 2000.

Note 4: The subject of this AD is addressed in Direction Generale De L'Aviation Civile (France) AD's 98–383–044(A) for the Model SA–365C, 98–382–024–(A) for the Model SA–366, and 98–384–047(A) for the Model AS–365N helicopters. These AD's are all dated September 23, 1998.

Issued in Fort Worth, Texas, on May 26, 2000.

Eric Bries,

Acting Manager, Rotorcraft Directorate, Aircraft Certification Service.

[FR Doc. 00–14194 Filed 6–5–00; 8:45 am]

BILLING CODE 4910–13–U

DEPARTMENT OF TRANSPORTATION

Federal Aviation Administration

14 CFR Part 71

[Airspace Docket No. 98–AAL–26]

RIN 2120–AA66

Modification and Revocation of VOR and Colored Federal Airways and Jet Routes; AK

AGENCY: Federal Aviation Administration (FAA), DOT.

ACTION: Final rule.

SUMMARY: This action revokes one jet route (J–814R), and modifies five jet routes (J–111, J–115, J–127, J–501 and J–511), three Very High Frequency Omnidirectional Range (VOR) Federal airways (V–319, V–453 and V–456), and one colored Federal airway (G–8), and located in Alaska. The FAA is taking this action for the following reasons: to realign the North Pacific (NOPAC) Air Traffic Service (ATS) route structure; to reflect the Adak Nondirectional Radio Beacon (NDB), AK, decommissioning from the National Airspace System (NAS); and to resolve an aeronautical charting discrepancy. This action will improve the management of air traffic operations in Alaska and enhance safety.

EFFECTIVE DATE: 0901 UTC, October 5, 2000.

FOR FURTHER INFORMATION CONTACT: Joseph C. White, Airspace and Rules Division, ATA–400, Office of Air Traffic Airspace Management, Federal Aviation Administration, 800 Independence Avenue, SW., Washington, DC 20591; telephone: (202) 267–8783.

SUPPLEMENTARY INFORMATION:

Background

On April 14, 1999, the FAA proposed to amend 14 CFR part 71 (part 71) to revoke one jet route, and to modify five jet routes, three VOR Federal airways, and one colored Federal airway in Alaska (64 FR 18392). This action was considered necessary due to overlapping jet routes, decommissioning of the Adak NDB, and the existence of obsolete fixes still shown on jet routes. Interested parties were invited to participate in this rulemaking by submitting written comments on the proposal to the FAA. No comments were received. Except for editorial changes, this amendment is the same as that proposed in the notice.

The Rule

This action amends part 71 by revoking one jet route (J–814R), and modifying five jet routes (J–111, J–115, J–127, J–501, and J–511), three VOR Federal airways (V–319, V–453, and V–456), and one colored Federal airway (G–8), in Alaska. The FAA is taking this action for the following reasons.

Segments of J–111 from Anchorage to Middleton Island to the noncompulsory reporting point SNOUT overlap existing J–804R segments and are not used. This action revises the legal description of J–111 to reflect this change.

Jet Route J–115 and Colored Federal Airway G–8 use Adak NDB which will be decommissioned. The new NDB on Adak Island will be named Mount Moffett NDB. This action changes the legal descriptions of J–115 and G–8 to show the new NDB.

Jet Routes J–127, J–501, J–511, and J–814R terminate at AUGIN, MIXER, ENCOR, and PANTT fixes which were once part of the NOPAC ATS route structure and these fixes are no longer required for air traffic control (ATC) purposes. As a result, the FAA is revising J–127, J–501, and J–511 to reflect this change in route structure and revoking J–814R as this route is no longer needed for ATC purposes.

Alaskan Federal Airways V–319 and V–453 are being amended by adding and converting non-part 95 segments to VOR Federal airway segments. Non-part 95 segments are routes that are nonregulatory, uncharted, and are not subject to the requirements of part 95, instrument flight rules (IFR) altitudes. The conversion of these non-part 95 segments to VOR Federal airway segments will add to the IFR airway and route infrastructure in Alaska. The new VOR Federal airway segments, unlike the non-part 95 segments, will enable the FAA to provide charted flight procedural information to the pilots pertaining to navigational guidance, minimum en route altitudes and minimum obstruction clearance altitudes information, thereby enhancing safety.

Alaskan Federal Airway V–456 is amended to correct a discrepancy on how the airway is depicted on the IFR En route L–3/L–4 Low Altitude—Alaska Chart and the Kodiak Aeronautical Sectional Chart. The outbound radial from King Salmon is 032° on the sectional chart and 033° on the en route chart. The current legal description for V–456 includes an intersection (King Salmon 053° and Kenai 239°) which will be removed to correct the discrepancy. The course from King Salmon to Kenai (032.71°) will resolve to 033° once the intersection is removed. This action will make the route segment a straight line and will not affect the fixes STREW, BITOP, or COPPS on V–456.

The FAA has determined that this regulation only involves an established body of technical regulations for which frequent and routine amendments are necessary to keep them operationally current. Therefore, this action: (1) Is not a ''significant regulatory action'' under Executive Order 12866; (2) is not a ''significant rule'' under DOT Regulatory Policies and Procedures (44 FR 11034; February 26, 1979); and (3) does not warrant preparation of a regulatory evaluation as the anticipated impact is so minimal. Since this is a routine matter that will only affect air traffic procedures and air navigation, it is certified that this rule will not have a significant economic impact on a substantial number of small entities under the criteria of the Regulatory Flexibility Act.

Jet routes, green Federal airways, and Alaskan VOR Federal airways are published in paragraph 2004, paragraph 6009(a), and paragraph 6010(b), respectively, of FAA Order 7400.9G, Airspace Designations and Reporting Points, dated September 1, 1999, and effective September 16, 1999, which is incorporated by reference in 14 CFR 71.1. The jet routes, green Federal airway, and Alaskan VOR Federal

airways listed in this document will be published subsequently in or removed from the order.

List of Subjects in 14 CFR Part 71

Airspace, Incorporation by reference, Navigation (air).

Adoption of the Amendment

In consideration of the foregoing, the Federal Aviation Administration amends 14 CFR part 71 as follows:

PART 71—DESIGNATION OF CLASS A, CLASS B, CLASS C, CLASS D, AND CLASS E AIRSPACE AREAS; AIRWAYS; ROUTES; AND REPORTING POINTS

1. The authority citation for part 71 continues to read as follows:

Authority: 49 U.S.C. 106(g), 40103, 40113, 40120; E.O. 10854, 24 FR 9565, 3 CFR, 1959–1963 Comp., p. 389.

§ 71.1 [Amended]

2. The incorporation by reference in 14 CFR 71.1 of Federal Aviation Administration Order 7400.9G, Airspace Designations and Reporting Points, dated September 1, 1999, and effective September 16, 1999, is amended as follows:

Paragraph 2004 Jet Routes

* * * * *

J–111 [Revised]

From Nome, AK, via Unalakleet, AK; McGrath, AK; Anchorage, AK.

* * * * *

J–115 [Revised]

From Shemya, AK, NDB; Mount Moffett, AK, NDB; Dutch Harbor, AK, NDB; Cold Bay, AK; King Salmon, AK; INT King Salmon 053° and Kenai, AK, 239° radials; Kenai; Anchorage, AK; Fairbanks, AK; Chandalar, AK, NDB; to Deadhorse, AK.

* * * * *

J–127 [Revised]

From King Salmon, AK; to INT King Salmon 042° and Anchorage, AK, 246° radials.

* * * * *

J–501 [Revised]

From San Marcus, CA, via Big Sur, CA; Point Reyes, CA, via Rogue Valley, OR; Hoquiam, WA; INT Hoquiam 354° and Tatoosh, WA, 162° radials; Tatoosh; Cape Scott, BC, Canada, NDB; Sandspit, BC, Canada; Biorka Island, AK; Yakutat, AK; Johnstone Point, AK; Anchorage, AK; Sparrevohn, AK; Bethel, AK; excluding the airspace within Canada.

* * * * *

J–511 [Revised]

From Dillingham, AK; Anchorage, AK; Big Lake, AK; Gulkana, AK; to Burwash Landing, YT, Canada, NDB, excluding the portion which lies over Canadian territory.

* * * * *

J–814R [Revoked]

* * * * *

Paragraph 6009(a) Green Federal Airways

* * * * *

G–8 [Revised]

From Shemya, AK, NDB; 20 AGL, Mount Moffet, NDB, AK; 20 AGL, Dutch Harbor, AK, NDB; 20 AGL, INT Dutch Harbor NDB 041° and Elfee, AK, NDB 253° bearings; 20 AGL, Elfee NDB; 20 AGL Saldo, AK, NDB; INT Saldo NDB 054° and Kachemak, AK, NDB 269° bearings; to Kachemak NDB. From Campbell Lake, AK, NDB; Glenallen, AK, NDB; INT Glenallen NDB 052° and Nabesna, AK, NDB 252° bearings; Nabesna NDB.

* * * * *

Paragraph 6010(b) Alaskan VOR Federal Airways

* * * * *

V–319 [Revised]

From Yakutat, AK, via Johnstone Point, AK; INT Johnstone Point 286° and Anchorage, AK, 117° radials; Anchorage; Sparrevohn, AK; Bethel, AK; Hooper Bay, AK; Nanwak, AK, NDB; to Kipnuk, AK.

* * * * *

V–453 [Revised]

From King Salmon, AK; Dillingham, AK; INT Dillingham 308° and Bethel, AK, 143° radials; Bethel; to Unalakleet, AK.

* * * * *

V–456 [Revised]

From Cold Bay, AK; King Salmon, AK; Kenai, AK; Anchorage, AK; Big Lake, AK; Gulkana, AK; to Northway, AK.

* * * * *

Issued in Washington, DC, on May 30, 2000.

Reginald C. Matthews,

Manager, Airspace and Rules Division.

[FR Doc. 00–14044 Filed 6–5–00; 8:45 am]

BILLING CODE 4910–13–P

DEPARTMENT OF HEALTH AND HUMAN SERVICES

Food and Drug Administration

21 CFR Part 573

[Docket No. 98F–0196]

Food Additives Permitted in Feed and Drinking Water of Animals; Selenium Yeast

AGENCY: Food and Drug Administration, HHS.

ACTION: Final rule.

SUMMARY: The Food and Drug Administration (FDA) is amending the regulations for food additives permitted in feed to provide for the safe use of selenium yeast as a source of selenium in animal feeds intended for chickens. This action is in response to a food additive petition filed by Alltech Biotechnology Center.

DATES: This rule is effective June 6, 2000. Submit written objections and requests for a hearing by July 6, 2000.

ADDRESSES: Submit written objections to the Dockets Management Branch (HFA–305), Food and Drug Administration, 5630 Fishers Lane, rm. 1061, Rockville, MD 20852.

FOR FURTHER INFORMATION CONTACT: Nelson Chou, Center for Veterinary Medicine (HFV–228), Food and Drug Administration, 7500 Standish Pl., Rockville, MD 20855, 301–827–0161.

SUPPLEMENTARY INFORMATION:

I. Background

In a notice published in the **Federal Register** of May 12, 1998 (63 FR 26193), FDA announced that a food additive petition (animal use) (FAP 2238) had been filed by Alltech Biotechnology Center, 3031 Catnip Hill Pike, Nicholasville, KY 40356. The petition proposed to amend the food additive regulations in § 573.920 *Selenium* (21 CFR 573.920) to provide for the safe use of selenium yeast as a source of selenium in animal feeds intended for use in poultry. The notice of filing provided for a 60-day comment period on the petitioner's environmental assessment. No comments have been received.

II. Conclusion

FDA concludes that the data establish the safety and utility of selenium yeast, for use in feeds for chickens, and the food additive regulations should be amended as set forth below.

III. Public Disclosure

In accordance with § 571.1(h) (21 CFR 571.1(h)), the petition and the documents that FDA considered and relied upon in reaching its decision to approve the petition are available for inspection at the Center for Veterinary Medicine by appointment with the information contact person listed above. As provided in § 571.1(h), the agency will delete from the documents any materials that are not available for public disclosure before making the documents available for inspection.

IV. Environmental Impact

The agency has determined under 21 CFR 25.32(r) that this action is of a type that does not individually or cumulatively have a significant effect on

the human environment. Therefore, neither an environmental assessment nor an environmental impact statement is required.

V. Objections and Hearing Requests

Any person who will be adversely affected by this regulation may at any time file with the Dockets Management Branch (address above) written objections by July 6, 2000. Each objection shall be separately numbered, and each numbered objection shall specify with particularity the provisions of the regulation to which objection is made and the grounds for the objection. Each numbered objection on which a hearing is requested shall specifically so state. Failure to request a hearing for any particular objection shall constitute a waiver of the right to a hearing on that objection. Each numbered objection for which a hearing is requested shall include a detailed description and analysis of the specific factual information intended to be presented in support of the objection in the event that a hearing is held. Failure to include such a description and analysis for any particular objection shall constitute a waiver of the right to a hearing on the objection. Three copies of all documents are to be submitted and are to be identified with the docket number found in brackets in the heading of this document. Any objections received in response to the regulation may be seen in the Dockets Management Branch between 9 a.m. and 4 p.m., Monday through Friday.

List of Subjects in 21 CFR Part 573

Animal feeds, Food additives.

Therefore, under the Federal Food, Drug, and Cosmetic Act and under authority delegated to the Commissioner of Food and Drugs and redelegated to the Center for Veterinary Medicine, 21 CFR part 573 is amended as follows:

PART 573—FOOD ADDITIVES PERMITTED IN FEED AND DRINKING WATER OF ANIMALS

1. The authority citation for 21 CFR part 573 continues to read as follows:

Authority: 21 U.S.C. 321, 342, 348.

2. Section 573.920 is amended by revising paragraph (b) and by adding paragraph (h) to read as follows:

§ 573.920 Selenium.

* * * * *

(b) The food additive selenium is a nutrient administered in animal feed as sodium selenite or sodium selenate or in a controlled-release sodium selenite bolus, as provided in paragraphs (f) and (g) of this section, or as selenium yeast, as provided in paragraph (h) of this section.

* * * * *

(h) The additive selenium yeast is added to complete feed for chickens at a level not to exceed 0.3 part per million. Usage of this additive must conform to the requirements of paragraphs (e) and (f) of this section.

Dated: May 26, 2000.

Andrew A. Beaulieu,

Acting Director, Center for Veterinary Medicine.

[FR Doc. 00–14214 Filed 6–5–00; 8:45 am]

BILLING CODE 4160–01–F

DEPARTMENT OF THE INTERIOR

Minerals Management Service

30 CFR Part 250

Oil and Gas and Sulphur Operations in the Outer Continental Shelf—Corrections

AGENCY: Minerals Management Service (MMS), Interior.

ACTION: Correcting amendments.

SUMMARY: This document makes technical corrections to regulations that were published in various **Federal Register** documents and are codified in the Code of Federal Regulations under Title 30—Minerals Resources, Parts 200–269. The changes are necessary to correct a citation and a reference to a section of a document incorporated by reference.

EFFECTIVE DATE: June 6, 2000.

FOR FURTHER INFORMATION CONTACT: Alexis London, Rules Processing Team, Engineering and Operations Division, (703) 787–1600.

SUPPLEMENTARY INFORMATION:

Background

These correcting amendments affect all offshore operators and lessees. The following describes the two minor corrections we are making.

On May 29, 1998 (63 FR 29478), MMS published a final rule commonly known as the ''redesignation'' rule, which assigned new section numbers to each section in 30 CFR part 250 (Oil and Gas and Sulphur Operations in the Outer Continental Shelf). The purpose was to allow MMS to logically format the subparts in the future without further renumbering. In the process of redesignating the regulations, we missed correcting a citation in 30 CFR 250.613(a). That section references the citation ''§ 250.91'', which should have been changed to ''§ 250.601'' and is now being corrected.

In § 250.198(e), our regulations incorporate various documents by reference and these documents are then referenced in other sections of the regulations. One of these documents is API RP 14H, Recommended Practice for Installation, Maintenance and Repair of Surface Safety Valves and Underwater Safety Valves Offshore. This document is referenced in § 250.804(a)(4) as ''API RP 14H, Section 4, Table 2''. However, there are no tables in Section 4 of API RP 14H and the reference should have been to ''Section 6'' rather than ''Section 4''. We are correcting § 250.804(a)(4) to simply reference document ''API RP 14H'' without designating a specific section of the document.

Need for Correction

As published, the final regulations contain errors which may prove to be misleading, and are in need of clarification.

List of Subject in 30 CFR Part 250

Continental shelf, Environmental impact statements, Environmental protection, Government contracts, Incorporation by reference, Investigations, Mineral royalties, Oil and gas development and production, Oil and gas exploration, Oil and gas reserves, Penalties, Pipelines, Public lands—mineral resources, Public lands—rights-of-way, Reporting and recordkeeping requirements, Sulphur development and production, Sulphur exploration, Surety bonds.

Accordingly, 30 CFR Part 250 is corrected by making the following correcting amendments:

PART 250–OIL AND GAS AND SULPHUR OPERATIONS IN THE OUTER CONTINENTAL SHELF

1. The authority citation for part 250 continues to read as follows:

Authority: 43 U.S.C. 1331 *et seq.*

§ 250.613 [Corrected]

2. In § 250.613, paragraph (a), in the first sentence, the citation ''§ 250.91'' is revised to read ''§ 250.601''.

§ 250.804 [Corrected]

3. In § 250.804, paragraph (a)(4), in the second sentence, the reference to ''API RP 14H, Section 4, Table 2.'' is revised to read ''API RP 14H.''

Dated: May 24, 2000.

John V. Mirabella,

Acting Chief, Engineering and Operations Division.

[FR Doc. 00–13867 Filed 6–5–00; 8:45 am]

BILLING CODE 4310–MR–P

DEPARTMENT OF TRANSPORTATION

Coast Guard

33 CFR Part 117

CGD11–00–003

RIN 2115–AE47

Drawbridge Operating Regulations; China Basin, Mission Creek, San Francisco, CA

AGENCY: Coast Guard, DOT.

ACTION: Temporary final rule.

SUMMARY: The Commander, Eleventh Coast Guard District is temporarily changing the regulation governing the Third Street Drawbridge, Mile 0.0, across Mission Creek, China Basin, San Francisco, CA. The drawbridge need not open for vessel traffic and may remain in the closed-to-navigation position from 8:30 a.m. to 10:30 a.m. on July 9, 2000. This temporary rule is issued to allow the public to cross the bridge to participate in the scheduled Second Annual Chronicle Marathon, a community event.

DATES: This temporary rule is effective from 8:30 a.m. to 10:30 a.m. on July 9, 2000.

ADDRESSES: The public docket and all documents referred to in this notice will be available for inspection and copying at offices of the Commander (oan–2), Building 50–6, Eleventh Coast Guard District, Coast Guard Island, Alameda, CA 94501–5100 50–6, between 7 a.m. and 4 p.m., Monday through Friday, except Federal holidays.

FOR FURTHER INFORMATION CONTACT: David H. Sulouff, Chief, Bridge Section, Eleventh Coast Guard District, Building 50–6 Coast Guard Island, Alameda, CA 94501–5100, telephone 510–437–3516.

SUPPLEMENTARY INFORMATION:

Regulatory Information

We did not publish a notice of proposed rulemaking (NPRM) for this regulation. Under 5 U.S.C. 553(b)(B), the Coast Guard finds that good cause exists for not publishing an NPRM. This rule is being promulgated without an NPRM due to the short time frame available between the submission of the request by the Department of Public Works of the City of San Francisco and the date of the event. Under 5 U.S.C. 553(d)(3), the Coast Guard finds that good cause exists for making this rule effective less than 30 days after publication in the **Federal Register**.

Background and Purpose

On May 10, 2000, the Department of Public Works of the City of San Francisco requested a temporary change to the operation of the Third Street Bridge across Mission Creek, China Basin at Mile (0.0) in San Francisco, California. The Third Street Drawbridge navigation span provides vertical clearance of 8 feet above MLLW in the closed-to-navigation position. Navigation on the waterway consists of both commercial and recreational watercraft. Presently, the draw is required to open on signal if at least one hour advance notice is given. The City requested the drawbridge be permitted to remain closed to navigation from 8:30 a.m. to 10:30 a.m. on July 9, 2000. During this time the bridge will be crossed by participants in the scheduled Second Annual Chronicle Marathon. This temporary drawbridge operation amendment has been coordinated with the waterway users. No objections to the proposed rule were raised.

Regulatory Evaluation

This temporary rule is not a ''significant regulatory action'' under section 3(f) of Executive Order 12866 and does not require an assessment of potential costs and benefits under section 6(a)(3) of that Order. It has not been reviewed by the Office of Management and Budget under that Order. It is not a ''significant'' under the regulatory policies and procedures of the Department of Transportation (DOT) (44 FR 11040, February 26, 1979). The Coast Guard expects the economic impact of this temporary rule to be so minimal that a full Regulatory Evaluation under paragraph 10(e) of the regulatory policies and procedures of DOT is unnecessary. This is because waterway traffic is not likely to be delayed more than two hours.

Small Entities

Under the Regulatory Flexibility Act (5 U.S.C. 601–612), the Coast Guard must consider whether this temporary rule will have a significant economic impact on a substantial number of small entities. The term ''small entities'' comprises small businesses and not-for-profit organizations that are independently owned and operated and are not dominant in their fields and government jurisdictions with populations of less than 50,000.

This rule will be in effect for only 2 hours early in the day and the Coast Guard expects the impact of this action to be minimal. Therefore, the Coast Guard certifies under 5 U.S.C. 605(b), that this action will not have a significant economic impact on a substantial number of small entities.

Assistance for Small Entities

Under section 213(a) of the Small Business Regulatory Enforcement Fairness Act of 1996 (Pub. L. 104–121), we offer to assist small entities in understanding the rule so that they could better evaluate its effects on them and participate in the rulemaking process. Any individual that qualifies or, believes he or she qualifies as a small entity and requires assistance with the provisions of this rule, may contact David H. Sulouff, Chief, Bridge Section, Eleventh Coast Guard District, Building 50–6, Coast Guard Island, Alameda, CA 94501–5100, telephone 510–437–3516.

Collection of Information

This rule calls for no new collection of information under the Paperwork Reduction Act (44 U.S.C. 3501–3520).

Federalism

We have analyzed this rule under the principles and criteria contained in Executive Order 13132, and have determined that this rule does not have implications of federalism under that Order.

Unfunded Mandates Reform Act

The Unfunded Mandates Reform Act of 1995 (2 U.S.C. 1531–1538) governs the issuance of Federal regulations that require unfunded mandates. An unfunded mandate is a regulation that requires a State, local, or tribal government or the private sector to incur direct costs without the Federal Government's having first provided the funds to pay those unfunded mandate costs. This rule will not impose an unfunded mandate.

Taking of Private Property

This rule will not effect a taking of private property or otherwise have taking implications under E.O. 12630, Governmental Actions and Interference with Constitutionally Protected Property Rights.

Civil Justice Reform

This rule meets applicable standards in sections 3(a) and 3(b)(2) of E.O. 12988, Civil Justice Reform, to minimize litigation, eliminate ambiguity, and reduce burden.

Protection of Children

We have analyzed this rule under E.O. 13045, Protection of Children from Environmental Health Risks and Safety Risks. This rule is not an economically significant rule and does not concern an environmental risk to health or risk to safety that may disproportionately affect children.

Environmental

The Coast Guard considered the environmental impact of this temporary rule and concluded that under Chapter 2.B.2 and Figure 2–1, 32(e) of Commandant Instruction M16475.1C, this temporary rule is categorically excluded from further environmental documentation. A ''Categorical Exclusion Determination'' is available in the docket for inspection or copying where indicated under **ADDRESSES**.

List of Subjects in 33 CFR Part 117

Bridges.

For the reasons set out in the preamble, the Coast Guard amends Part 117 of Title 33, Code of Federal Regulations, as follows:

PART 117—DRAWBRIDGE OPERATION REGULATIONS

1. The authority citation for Part 117 continues to read as follows:

Authority: 33 U.S.C. Sec. 499; 49 CFR 1.46; 33 CFR 1.05–1(g); section 117.225 also issued under the authority of Pub. L. 102–587, 106 Stat. 5039.

2. From 8:30 a.m. to 10:30 a.m., July 9, 2000, § 117.149 is suspended and a new § 117.T148 is temporarily added to read as follows:

§ 117.T148 China Basin, Mission Creek.

The draw of the Third Street Drawbridge, China Basin mile (0.0), at San Francisco, California need not open from 8:30 a.m. to 10:30 a.m. on July 9, 2000. During this time it may remain closed to navigation.

Dated: May 25, 2000.

T.H. Collins,

Vice Admiral, U.S. Coast Guard, Commander, Eleventh Coast Guard District.

[FR Doc. 00–14042 Filed 6–5–00; 8:45 am]

BILLING CODE 4910–15–U

DEPARTMENT OF TRANSPORTATION

Coast Guard

33 CFR Part 117

[CGD07–00–053]

RIN 2115–AE47

Drawbridge Operation Regulations; Atlantic Intracoastal Waterway, Mile 1084.6, Miami, FL

AGENCY: Coast Guard, DOT.

ACTION: Temporary final rule with request for comments.

SUMMARY: Commander, Seventh Coast Guard District is temporarily changing the regulations governing the West 79th Street Causeway Bridge, mile 1084.6 across the Atlantic Intracoastal Waterway at Palm Beach, Florida. This temporary rule establishes scheduled openings every 30 minutes, Monday through Saturday, from 7 a.m. to 6 p.m., starting Thursday, May 25, 2000, through February 28, 2001. The drawbridge will open on demand during all other periods including holidays and Sundays. This action is necessary to facilitate rehabilitation of the drawbridge.

DATES: This rule is effective from May 25, 2000, to February 28, 2001. Comments must be received by September 29, 2000.

ADDRESSES: Comments and material received from the public, as well as documents indicated in this preamble as being available in the docket, are part of docket [CGD07–00–053] and are available for inspection or copying at Commander (obr), Seventh Coast Guard District, 909 S. E. 1st Avenue, Room 406, Miami, FL 33131 between 8 a.m. and 4:30 p.m., Monday through Friday, except Federal holidays.

FOR FURTHER INFORMATION CONTACT: Mr. Barry Dragon, Project Officer, Seventh Coast Guard District, at (305) 415–6743.

SUPPLEMENTARY INFORMATION:

Regulatory Information

We did not publish a notice of proposed rulemaking (NPRM) for this regulation. Under 5 U.S.C. 553(b)(B), the Coast Guard finds that good cause exists for not publishing an NPRM. Publishing an NPRM is impracticable because we received notice of this rehabilitation very recently, not leaving time for a NPRM.

Under 5 U.S.C. 553(d)(3), the Coast Guard finds that good cause exists for making this rule effective less than 30 days after publication in the **Federal Register**. We received notice of this rehabilitation very recently, not leaving time for a delayed effective date.

Request for Comments

We encourage you to participate in this rulemaking by submitting comments and related material. If you do so, please include your name and address, identify the docket number for this rulemaking [CGD07–00–053], indicate the specific section of this document to which each comment applies, and give the reason for each comment. Please submit all comments and related material in an unbound format, no larger than 8½ by 11 inches, suitable for copying. If you would like to know they reached us, please enclose a stamped, self-addressed postcard or envelope. We will consider all comments and material received during the comment period. We may change this temporary rule in view of them.

We do not now plan to hold a public meeting. But you may submit a request for a meeting by writing to the address under **ADDRESSES**, explaining why one would be beneficial. If the Coast Guard determines that a public meeting would aid this rulemaking, we will hold one at a time and place announced by a later notice in the **Federal Register**.

Discussion of the Rule

The West 79th Street Causeway Drawbridge, mile 1084.6, across the Atlantic Intracoastal Waterway, has a vertical clearance of 19.5 feet at mean high water and a horizontal clearance of 90 feet between fenders. The existing operating regulations in 33 CFR 117.5 require the bridge to open promptly and fully for the passage of vessels when a request to open is given.

The Florida Department of Transportation requested from the Coast Guard on May 9, 2000, that the West 79th Street Causeway Drawbridge operations be temporarily changed to allow for rehabilitation of the drawbridge. This temporary rule change to the drawbridge operating regulations will allow the drawbridge owner or operator to open every thirty minutes, Monday through Saturday, from 7 a.m. to 6 p.m., starting Thursday, May 25, 2000 through February 28, 2001.

Regulatory Evaluation

This rule is not a ''significant regulatory action'' under section 3(f) of Executive Order 12866 and does not require an assessment of potential costs and benefits under section 6(a)(3) of that Order. The Office of Management and Budget has not reviewed it under that Order. It is not ''significant'' under the regulatory policies and procedures of the Department of Transportation (DOT) (44 FR 11040, February 26, 1979). The Coast Guard expects the economic impact of this proposal to be minimal because the bridge will still open at 30 minute intervals and on demand during evenings, Sundays, and holidays.

Small Entities

Under the Regulatory Flexibility Act (5 U.S.C. 601–612), we considered whether this rule would have a significant economic impact on a substantial number of small entities. The term ''small entities'' comprises small businesses, not-for-profit organizations that are independently owned and operated and are not dominant in their fields, and governmental jurisdictions with populations of less than 50,000.

The Coast Guard certifies under 5 U.S.C. 605(b) that this rule will not have a significant economic impact on a substantial number of small entities.

This rule will affect the following entities, some of which may be small entities: owners or operators of vessels intending to transit the Intracoastal waterway at mile 1084.6. Although this temporary rule will be in effect for nine months, vessel traffic can still pass through the drawbridge every 30 minutes during weekdays and Saturday, and on demand at all other times.

Assistance for Small Entities

Under section 213(a) of the Small Business Regulatory Enforcement Fairness Act of 1996 (Pub. L. 104–121), we offer to assist small entities in understanding the rule so that they could better evaluate its effects on them and participate in the rulemaking process. If the rule would affect your small business, organization, or government jurisdiction and you have questions concerning is provisions or options for compliance, please contact the person listed under **FOR FURTHER INFORMATION CONTACT** for assistance in understanding and participating in this rulemaking.

We also have a point of contact for commenting on actions by employees of the Coast Guard. Small businesses may send comments on the actions of Federal employees who enforce, or otherwise determine compliance with Federal regulations to the Small Business and Agriculture Regulatory Enforcement Ombudsman and the Regional Small Business Regulatory Fairness Boards. The Ombudsman evaluates these actions annually and rates each agency's responsiveness to small business. If you wish to comment on actions by employees of the Coast Guard, call 1–888–REG–FAIR (1–888–734–3247).

Collection of Information

This rule calls for no new collection of information under the Paperwork Reduction Act of 1995 (44 U.S.C. 3501–3520).

Federalism

We have analyzed this rule under Executive Order 13132 and have determined that this rule does not have implications for federalism under that Order.

Unfunded Mandates Reform Act

The Unfunded Mandates Reform Act of 1995 (2 U.S.C. 1531–1538) governs the issuance of Federal regulations that require unfunded mandates. An unfunded mandate is a regulation that requires a state, local, or tribal government or the private sector to incur direct costs without the Federal Government's having first provided the funds to pay those unfunded mandate costs. This rule will not impose an unfunded mandate.

Taking of Private Property

This rule will not effect a taking of private property or otherwise have taking implications under E.O. 12630, Governmental Actions and Interference with Constitutionally Protected Property Rights.

Civil Justice Reform

This rule meets applicable standards in sections 3(a) and 3(b)(2) of E.O. 12988, Civil Justice Reform, to minimize litigation, eliminate ambiguity, and reduce burden.

Protection of Children

We have analyzed this rule under E.O. 13045, Protection of Children from Environmental Health Risks and Safety Risks. This rule is not an economically significant rule and does not concern an environmental risk to health or risk to safety that may disproportionately affect children.

Environment

The Coast Guard considered the environmental impact of this rule and concluded that under figure 2–1, paragraph (32)(e), of Commandant Instruction M16475.lC, this rule is categorically excluded from further environmental documentation.

List of Subjects in 33 CFR Part 117

Bridges.

Temporary regulations: For the reasons discussed in the preamble, the Coast Guard amends 33 CFR part 117 as follows:

PART 117—[AMENDED]

1. The authority citation for part 117 continues to read as follows:

Authority: 33 U.S.C. 499; 49 CFR 1.46; 33 CFR 1.05–1(g); section 117.255 also issued under the authority of Pub. L. 102–587, 106 Stat. 5039.

2. From May 25, 2000 through February 28, 2001, in § 117.261, a new paragraph (rr) is temporarily added to read as follows:

§ 117.261 Atlantic Intracoastal Waterway from St. Marys River to Key Largo.

* * * * *

(rr) *West 79th Street Causeway Drawbridge, mile 1084.6, Miami, Florida.* The draw need open only on the hour and half-hour, Monday through Saturday, from 7 a.m. to 6 p.m., beginning May 25, 2000 through February 28, 2001. The draw will open on demand during all other periods including holidays and Sundays.

Dated: May 23, 2000.

T.W. Allen,

Rear Admiral, Commander, Seventh Coast Guard District.

[FR Doc. 00–14152 Filed 6–5–00; 8:45 am]

BILLING CODE 4910–15–U

DEPARTMENT OF TRANSPORTATION

Coast Guard

33 CFR Part 165

[CGD01–00–009]

RIN 2115–AA97

Safety Zone: OPSAIL 2000 Fireworks Displays and Search and Rescue Demonstrations, Port of New York/New Jersey

AGENCY: Coast Guard, DOT.

ACTION: Temporary final rule.

SUMMARY: The Coast Guard is establishing four temporary safety zones for fireworks displays located on New York Harbor, the East River, and Hudson River, and one temporary safety zone for Search and Rescue demonstrations on the Hudson River. This action is necessary to provide for the safety of life on navigable waters during the events. It will restrict traffic in portions of New York Harbor, the East and Hudson River.

DATES: This rule is effective from 6:30 p.m. on July 4, 2000 until 6 p.m. on July 8, 2000.

ADDRESSES: Comments and material received from the public, as well as documents indicated in this preamble as being available in the docket, are part of docket (CGD01–00–009) and are available for inspection or copying at Waterways Oversight Branch (CGD01–00–009), Coast Guard Activities New York, 212 Coast Guard Drive, room 204, Staten Island, New York, 10305 between 8 a.m. and 3 p.m., Monday through Friday, except Federal holidays.

FOR FURTHER INFORMATION CONTACT: Lieutenant M. Day, Waterways Oversight Branch, Coast Guard Activities New York (718) 354–4012.

SUPPLEMENTARY INFORMATION:

Regulatory Information

On May 17, 2000, we published a notice of proposed rulemaking (NPRM) entitled Safety Zone: OPSAIL 2000 Fireworks Displays and Search and Rescue Demonstrations, Port of New

York/New Jersey in the **Federal Register** (65 FR 31293). We received no letters commenting on the proposed rule. No public hearing was requested, and none was held.

Background and Purpose

The Coast Guard is establishing four temporary safety zones for fireworks displays, and one temporary safety zone for Search and Rescue demonstrations being held in conjunction with OPSAIL 2000.

Macy's/OPSAIL 2000 Fireworks

The Coast Guard is establishing four temporary safety zones for the Macy's/OPSAIL 2000 fireworks display in New York Harbor, the East River, and Hudson River, on July 4, 2000. The first safety zone includes all waters of the East River east of a line drawn from the Fireboat Station Pier, Battery Park City, in approximate position 40°42′15.5″N 074°01′07″ W (NAD 1983) to Governors Island Light (2) (LLNR 35010), in approximate position 40°41′34.5″N 074°01′11″ W (NAD 1983); north of a line drawn from Governors Island, in approximate position 40°41′25.3″N 074°00′42.5″W (NAD 1983) to the southwest corner of Pier 9A, Brooklyn; south of a line drawn through the southern point of Roosevelt Island from East 47th Street, Manhattan to 46 Road, Brooklyn, and all waters of Newtown Creek west of the Pulaski Bascule Bridge.

Vessels equal to or greater than 20 meters (65.6 feet) in length, carrying persons for the purpose of viewing the fireworks, may take position in an area inside the safety zone at least 200 yards off the bulkhead on the west bank and just off the pierhead faces on the east bank of the East River between the Williamsburg Bridge and a line drawn through the East River Main Channel Lighted Buoy 18 (LLNR 27335), to a point on the Brooklyn shore at North 9th Street. All vessels must be in this location by 6:30 p.m. (e.s.t.) on July 4, 2000.

Once in position within the zone, all vessels must remain in position until released by the Captain of the Port, New York. On-scene-patrol personnel will monitor the number of designated vessels taking position in the viewing area of the zone. If it becomes apparent that any additional spectator vessels in the viewing area will create a safety hazard, the patrol commander may prevent additional vessels from entering it. After the event has concluded and the fireworks barges have safely relocated outside of the main channel, vessels will be allowed to depart the viewing area as directed by the patrol commander.

We created the viewing area within this safety zone in order to reduce significant safety hazards in this area of the East River, due in great part, to the extremely strong currents. Based on experience from similar events in this area of the East River, we are concerned that smaller spectator craft located in between the two fireworks barge sites could drift into the fallout zone of either barge site. Additionally, experience from previous events has also shown that having large and small craft located in a confined area presents safety hazards for both sized vessels due to vessel wake, anchor swing radii, and restricted visibility of larger vessels in a confined area.

One safety zone is required for this large section of the East River because the Coast Guard has a limited amount of assets available to patrol this event of national significance. If we made this zone into two zones, we could not adequately enforce the boundaries of both zones, and the safety of the port and the mariners would be unacceptably compromised because of the two nearby fireworks barge locations in a confined waterway with significant currents.

The Staten Island Ferries may continue services to their ferry slip at Whitehall Street, The Battery, Manhattan, New York. Continuing ferry services in the southwestern portion of the safety zone will not create a hazard nor be threatened by the fireworks display because Vessel Traffic Services New York will monitor and control the transits of these ferries. Failure to allow these continued ferry services will have a negative impact on residents of Staten Island, New York, and those persons traveling to and from Manhattan at the end of the holiday weekend.

The second safety zone includes all waters of the Hudson River north of a line drawn from the southwest corner of Pier 94, Manhattan, to 40°46′31.3″N, 074°00′37.9″W (NAD 1983) onshore in Weehawken, NJ, and south of a line drawn from the northeast corner of Pier D, Weehawken, NJ, to the northwest corner of the northern pier of the West 30th Street Heliport in Manhattan.

The third safety zone includes all waters of Upper New York Bay, east of Liberty Island, bound by the following points: 40°41′33.2″N 074°02′24.4″W; 40°41′11.3″N 074°02′44.4″W; 40°41′02.1″N 074°02′25.1″W; 40°41′09.1″N 074°02′10.2″W; 40°41′25.6″N 074°02′09.6″W (NAD 1983); thence to the point of beginning.

The fourth safety zone includes all waters of Anchorage Channel, Upper New York Bay, bound by the following points: 40°38′12.4″N 074°03′05.6″W; 40°38′01.5″N 074°03′00.7″W; 40°37′21.0″N 074°02′50.0″W; 40°37′15.6″N 074°03′16.6″W; 40°38′08.3″N 074°03′37.4″W (NAD 1983); thence to the point of beginning.

The safety zones will be enforced from 6:30 p.m. (e.s.t.) until 11:30 p.m. (e.s.t.) on July 4, 2000. If the event is cancelled due to inclement weather, then this section will be enforced from 6:30 p.m. (e.s.t) until 11:30 p.m. (e.s.t.) on July 5, 2000. The safety zones prevent vessels from transiting these portions of Upper New York Bay, the East River and the Hudson River, and is needed to protect boaters from the hazards associated with fireworks launched from 13 separate barges in the area. No vessel may enter the safety zones without permission of the Captain of the Port, New York.

These safety zones cover the minimum area needed and impose the minimum restrictions necessary to ensure the protection of all vessels and the fireworks handlers aboard the barges.

Public notifications will be made prior to the event via Local Notice to Mariners, marine information broadcasts, facsimile, OPSAIL Inc.'s website, and Macy's waterways telephone ''hotline'' at 212–494–5247.

BILLING CODE 4910–15–U

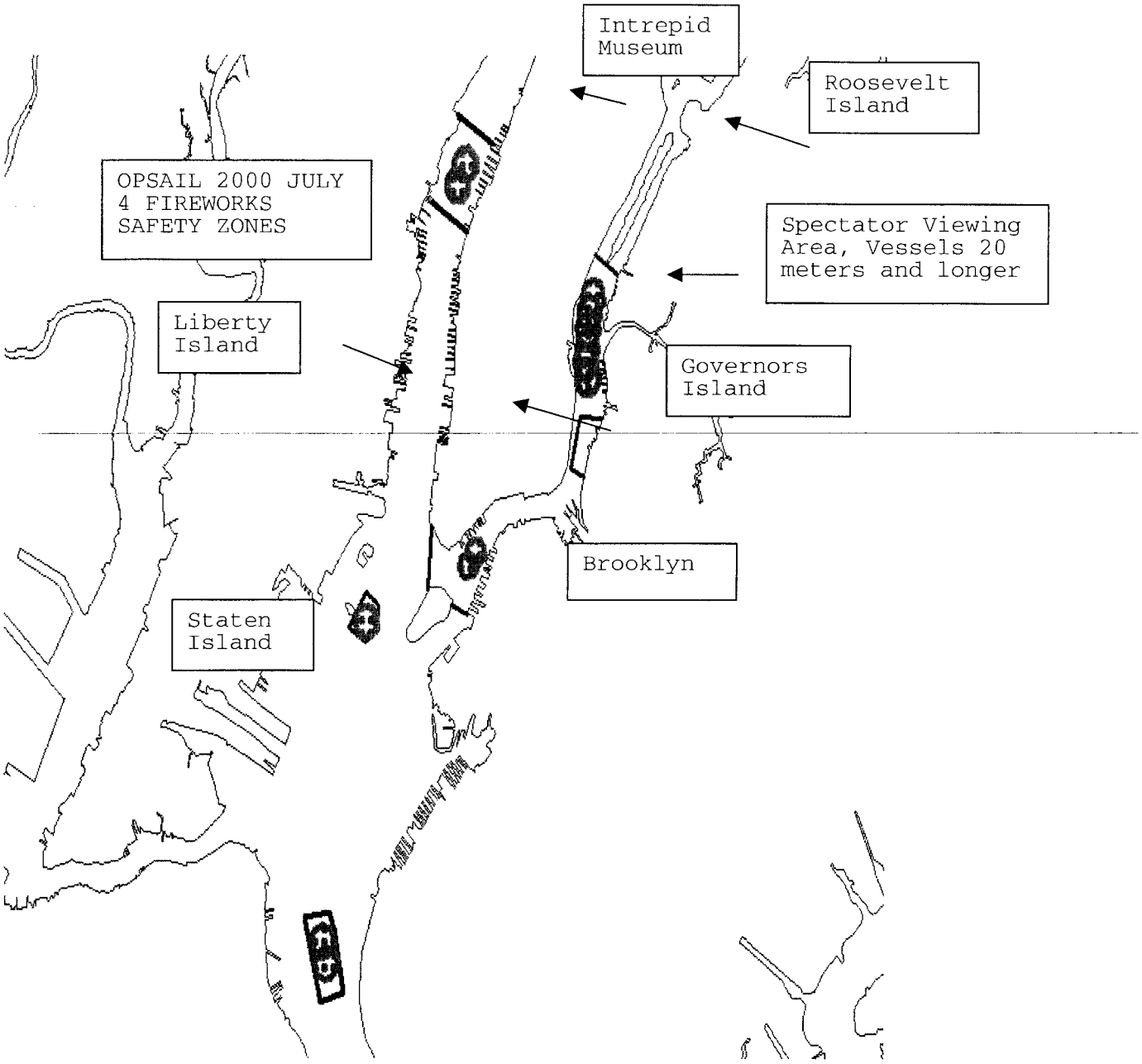

BILLING CODE 4910–15–C

Search and Rescue Demonstrations

The Coast Guard is also establishing a temporary safety zone for the OPSAIL Search and Rescue demonstrations held on and over the Hudson River between Piers 83 and 90. This safety zone includes all waters of the Hudson River bound by the following points: from the southeast corner of Pier 90, Manhattan, where it intersects the seawall, west to approximate position 40°46′10″N, 074°00′13″W (NAD 1983), south to approximate position 40°45′54″N, 074°00′25″W (NAD 1983), then east to the northeast corner of Pier 83 where it intersects the seawall. This safety zone will be enforced from 12 p.m. (e.s.t.) until 6 p.m. (e.s.t.), Thursday, July 6, through Saturday, July 8, 2000. It is needed to protect boaters and demonstration participants from the hazards associated with United States Military personnel demonstrating the capabilities of aircraft and watercraft in a confined area of the Hudson River. This safety zone prevents vessels from transiting only a portion of the Hudson River. Marine traffic will still be able to transit through the western 600 yards of the 950-yard wide Hudson River during the Search and Rescue demonstrations. Vessels moored at piers within the safety zone; however, will not be allowed to transit from their moorings without permission from the Captain of the Port, New York, during the effective periods of the safety zone. The Captain of the Port does not anticipate any negative impact on recreational or commercial vessel traffic due to this safety zone.

Public notifications will be made prior to the Search and Rescue Demonstrations via Local Notice to Mariners, marine information broadcasts, facsimile, and OPSAIL Inc.'s website.

Discussion of Comments and Changes

The Coast Guard received no letters commenting on the proposed rulemaking. No changes were made to this rulemaking.

Regulatory Evaluation

This rule is not a ''significant regulatory action'' under section 3(f) of Executive Order 12866 and does not require an assessment of potential costs and benefits under section 6(a)(3) of that Order. The Office of Management and Budget has not reviewed it under that Order. It is not ''significant'' under the regulatory policies and procedures of the Department of Transportation (DOT) (44 FR 11040, February 26, 1979).

We expect the economic impact of this rule to be so minimal that a full Regulatory Evaluation under paragraph 10e of the regulatory policies and procedures of DOT is unnecessary.

Although this regulation prevents traffic from transiting a portion of New York Harbor, the Hudson River, and East River, the effect of this regulation will not be significant for the following reasons: the limited duration that the regulated areas will be in effect and the extensive advance notifications that will be made to the maritime community via the Local Notice to Mariners, facsimile, marine information broadcasts, the sponsor's website and phone hotline, New York Harbor Operations Committee meetings, public meetings for maritime groups, and New York area newspapers, so mariners can adjust their plans accordingly. At no time will commercial shipping access to Port Newark/Port Elizabeth facilities be prohibited. Access to those areas may be accomplished using Raritan Bay, Arthur Kill, Kill Van Kull, and Newark Bay as an alternate route. This will allow the majority of the maritime industrial activity in the Port of New York/New Jersey to continue, relatively unaffected. Similar regulated areas were established for the 1986 and 1992 OPSAIL events, the annual Macy's July 4th fireworks display, and the annual Fleet Week Sea and Air demonstrations. Based upon the Coast Guard's experiences learned from these previous events of a similar magnitude, these regulations have been narrowly tailored to impose the least impact on maritime interests yet provide the level of safety deemed necessary.

The sizes of the fireworks safety zones were determined using National Fire Protection Association and New York City Fire Department standards for 10–12 inch mortars fired from a barge, combined with the Coast Guard's knowledge of tide and current conditions in these areas.

Small Entities

Under the Regulatory Flexibility Act (5 U.S.C. 601–612), we considered whether this rule would have a significant economic impact on a substantial number of small entities. The term ''small entities'' comprises small businesses, not-for-profit organizations that are independently owned and operated and are not dominant in their fields, and governmental jurisdictions with populations of less than 50,000.

The Coast Guard certifies under 5 U.S.C. 605(b) that this rule will not have a significant economic impact on a substantial number of small entities.

For the reasons discussed in the Regulatory Evaluation section above, the Coast Guard certifies under 5 U.S.C. 605(b) that this rule will not have a significant economic impact on a substantial number of small entities. This rule will affect the following entities, some of which might be small entities: The owners or operators of vessels intending to transit or anchor in portions of Lower and Upper New York Bay, the Hudson River, and East River during various times from July 4–8, 2000. These regulations will not have a significant economic impact on a substantial number of small entities for the following reasons: although these regulations will apply to a substantial portion of the Port of New York/New Jersey, designated areas for viewing the Fourth of July Fireworks are being established to allow for maximum use of the waterways by commercial tour boats that usually operate in the affected areas. Maritime traffic will also be able to transit around the areas where the Search and Rescue demonstrations are being held. Before the effective period, the Coast Guard will make notifications to the public via mailings, facsimiles, the Local Notice to Mariners and use of the sponsors Internet site. The Coast Guard is also holding public meetings with maritime groups to explain the schedule of events and approved spectator craft viewing areas. In addition, the sponsoring organization, OPSAIL Inc., is planning to publish information of the event in local newspapers, pamphlets, and television and radio broadcasts.

Assistance for Small Entities

Under section 213(a) of the Small Business Regulatory Enforcement Fairness Act of 1996 (Pub. L. 104–121), we offered to assist small entities in understanding the rule so that they could better evaluate its effects on them and participate in the rulemaking process. We provided explanations of the effect of these regulations on the Port of New York/New Jersey to approximately 18 small entities.

Small businesses may send comments on the actions of Federal employees who enforce, or otherwise determine compliance with, Federal regulations to the Small Business and Agricultural Regulatory Enforcement Ombudsman and the Regional Small Business Regulatory Fairness Boards. The Ombudsman evaluates these actions annually and rates each agency's responsiveness to small business. If you wish to comment on actions by employees of the Coast Guard, call 1–888–REG–FAIR (1–888–734–3247).

Collection of Information

This rule calls for no new collection of information under the Paperwork

Reduction Act of 1995 (44 U.S.C. 3501–3520).

Federalism

We have analyzed this rule under Executive Order 13132 and have determined that this rule does not have implications for federalism under that Order.

Unfunded Mandates Reform Act

The Unfunded Mandates Reform Act of 1995 (2 U.S.C. 1531–1538) governs the issuance of Federal regulations that require unfunded mandates. An unfunded mandate is a regulation that requires a State, local, or tribal government or the private sector to incur direct costs without the Federal Government's having first provided the funds to pay those costs. This rule will not impose an unfunded mandate.

Taking of Private Property

This rule will not effect a taking of private property or otherwise have taking implications under Executive Order 12630, Governmental Actions and Interference with Constitutionally Protected Property Rights.

Civil Justice Reform

This rule meets applicable standards in sections 3(a) and 3(b)(2) of Executive Order 12988, Civil Justice Reform, to minimize litigation, eliminate ambiguity, and reduce burden.

Protection of Children

We have analyzed this rule under Executive Order 13045, Protection of Children from Environmental Health Risks and Safety Risks. This rule is not an economically significant rule and does not concern an environmental risk to health or risk to safety that may disproportionately affect children.

Environment

The Coast Guard considered the environmental impact of this rule and concluded that, under figure 2–1, paragraph 34(g), of Commandant Instruction M16475.1C, this rule is categorically excluded from further environmental documentation. This rule fits paragraph 34(g) as it establishes five safety zones. A ''Categorical Exclusion Determination'' is available in the docket where indicated under **ADDRESSES**.

List of Subjects in 33 CFR Part 165

Harbors, Marine safety, Navigation (water), Reporting and recordkeeping requirements, Security measures, Waterways.

For the reasons discussed in the preamble, the Coast Guard amends 33 CFR Part 165 as follows:

PART 165—REGULATED NAVIGATION AREAS AND LIMITED ACCESS AREAS

1. The authority citation for Part 165 continues to read as follows:

Authority: 33 U.S.C. 1231; 50 U.S.C. 191; 33 CFR 1.05–1(g), 6.04–1, 6.04–6, 160.5; 49 CFR 1.46.

2. Add temporary § 165.T01–009 to read as follows:

§ 165.T01–009 Safety Zones: OPSAIL 2000 Fireworks Displays, and Search and Rescue Demonstrations, Port of New York/New Jersey.

(a) *Safety Zones Locations and Enforcement Periods.*

(1) *East River Fireworks Safety Zone.* All waters of the East River east of a line drawn from the Fireboat Station Pier, Battery Park City, in approximate position 40°42′15.5″N 074°01′07″W (NAD 1983) to Governors Island Light (2) (LLNR 35010), in approximate position 40°41′34.5″N 074°01′11″W (NAD 1983); north of a line drawn from Governors Island, in approximate position 40°41′25.3″N 074°00′42.5″W (NAD 1983) to the southwest corner of Pier 9A, Brooklyn; south of a line drawn through the southern point of Roosevelt Island from East 47th street, Manhattan to 46 Road, Brooklyn, and all waters of Newtown Creek west of the Pulaski Bascule Bridge.

(2) *Hudson River Fireworks Safety Zone.* All waters of the Hudson River north of a line drawn from the southwest corner of Pier 94, Manhattan, to 40°46′31.3″N, 074°00′37.9″W (NAD 1983) onshore in Weehawken, NJ, and south of a line drawn from the northeast corner of Pier D, Weehawken, NJ, to the northwest corner of the northern pier of the West 30th Street Heliport in Manhattan.

(3) *Liberty Island Fireworks Safety Zone.* All waters of Upper New York Bay, east of Liberty Island, bound by the following points: 40°41′33.2″N 074°02′24.4″W; 40°41′11.3″N 074°02′44.4″W; 40°41′02.1″N 074°02′25.1″W; 40°41′09.1″N 074°02′10.2″W; 40°41′25.6″N 074°02′09.6″W (NAD 1983); thence to the point of beginning.

(4) *Anchorage Channel Fireworks Safety Zone.* All waters of Anchorage Channel, Upper New York Bay, bound by the following points: 40°38′12.4″N 074°03′05.6″W; 40°38′01.5″N 074°03′00.7″W; 40°37′21.0″N 074°02′50.0″W; 40°37′15.6″N 074°03′16.6″W; 40°38′08.3″N 074°03′37.4″W (NAD 1983); thence to the point of beginning.

(5) *Search and Rescue Demonstrations Safety Zone.* All waters of Hudson River bound by the following points: from the southeast corner of Pier 90, Manhattan, where it intersects the seawall, west to approximate position 40°46′10″N, 074°00′13″W (NAD 1983), south to approximate position 40°45′54″N, 074°00′25″W (NAD 1983), then east to the northeast corner of Pier 83 where it intersects the seawall.

(6) *Enforcement period.* Paragraphs (a)(1) through (a)(4) will be enforced from 6:30 p.m. (e.s.t.) until 11:30 p.m. (e.s.t.) on Tuesday, July 4, 2000. If the event is cancelled due to inclement weather, then paragraphs (a)(1) through (a)(4) will be enforced from 6:30 p.m. (e.s.t.) to 11:30 p.m. (e.s.t.) on Wednesday, July 5, 2000.

(7) *Enforcement period.* Paragraph (a)(5) will be enforced daily from 12 p.m. (e.s.t.) until 6 p.m. (e.s.t.) from Thursday, July 6, through Saturday, July 8, 2000.

(b) *Effective period.* This section is effective from 6:30 p.m. (e.s.t.) on July 4, 2000, until 6 p.m. (e.s.t.) on July 8, 2000.

(c) *Regulations.* (1) The general regulations contained in 33 CFR 165.23 apply.

(2) No vessels will be allowed to transit the safety zone without the permission of the Captain of the Port, New York.

(3) All persons and vessels shall comply with the instructions of the Coast Guard Captain of the Port or the designated on-scene-patrol personnel. These personnel comprise commissioned, warrant, and petty officers of the Coast Guard. Upon being hailed by a U. S. Coast Guard vessel by siren, radio, flashing light, or other means, the operator of a vessel shall proceed as directed.

(4) Vessels may remain in the safety zone described in paragraph (a)(1) for the purpose of viewing the event in accordance with the following pre-established viewing area: Vessels equal to or greater than 20 meters (65.6 feet) in length, carrying persons for the purpose of viewing the fireworks, may take position in an area at least 200 yards off the bulkhead on the west bank and just off the pierhead faces on the east bank of the East River between the Williamsburg Bridge and a line drawn through the East River Main Channel Lighted Buoy 18 (LLNR 27335), to a point on the Brooklyn shore at North 9th Street. All vessels must be positioned in this viewing area within the safety zone by 6:30 p.m. (e.s.t.) on July 4, 2000.

Dated: June 1, 2000.

R.E. Bennis,

Captain, U.S. Coast Guard, Captain of the Port, New York.

[FR Doc. 00–14111 Filed 6–1–00; 4:28 pm]

BILLING CODE 4910–15–U

DEPARTMENT OF TRANSPORTATION

COAST GUARD

33 CFR Part 165

[CGD01–98–151]

RIN 2115–AE84

Regulated Navigation Area: Navigable Waters Within the First Coast Guard District

AGENCY: Coast Guard, DOT.

ACTION: Final rule.

SUMMARY: The Coast Guard amends the regulations at 33 CFR 165.100 that establish a Regulated Navigation Area (RNA) within the navigable waters of the First Coast Guard District. This Final Rule makes permanent the existing temporary authority of a Captain of the Port (COTP) to issue exemptions from the positive control of barges provisions of the RNA. These exemptions are authorized in limited circumstances in which an applicant employs equivalent levels of safety in the operation of vessels towing tank barges. This Final Rule removes the expiration date set in the Interim Rule for the exemption authority. The exemption authority is consistent with requirements of the relevant provisions of the Coast Guard Authorization Act of 1998, and with the purposes of environmental protection regulations to reduce the risk of oil spills in the marine environment, while accounting for the impact of the RNA on small entities.

DATES: This Final Rule is effective 1 July 2000.

ADDRESSES: Documents as indicated in this preamble are available for inspection or copying at Commander (m), First Coast Guard District, 408 Atlantic Ave., Boston, MA 02210–3350.

FOR FURTHER INFORMATION CONTACT: Lieutenant Rich Klein, c/o Commander (m), First Coast Guard District, 408 Atlantic Ave., Boston, MA 02210–3350; telephone 617–223–8243.

SUPPLEMENTARY INFORMATION:

Regulatory History

After the oil spill that resulted from the grounding of the Tank Barge NORTH CAPE off the coast of Rhode Island in 1996, a group comprised of operators of towing vessels and tank barges, environmental organizations, State agencies, and Coast Guard officials, formed the Regional Risk Assessment Team (RRAT). The purpose of the RRAT was to review operating procedures for tugs and barges in the Northeast. The RRAT issued a report that included recommended actions to minimize risks peculiar to the transportation of petroleum in the waters of the First Coast Guard District.

On October 13, 1998, the Coast Guard published in the **Federal Register** (63 FR 54639) a Notice of Proposed Rulemaking (NPRM) entitled ''Regulated Navigation Area: Navigable Waters within the First Coast Guard District.'' That NPRM addressed many of the issues that the RRAT also addressed.

On November 13, 1998, Congress enacted the Coast Guard Authorization Act of 1998 (Act). Section 311 of the Act required the Coast Guard, under authority delegated by the Secretary of Transportation, to promulgate regulations for the safety of towing vessels and tank barges in waters of the Northeast not later than December 31, 1998. Section 311(b)(1)(B) of the Act required the Coast Guard to fully consider each recommendation from the RRAT report. On December 30, 1998, the Coast Guard published in the **Federal Register** (63 FR 71764) a Final Rule establishing the RNA for the waters of the Northeast.

After publication of the Final Rule, several companies in the towing and tank barge industry affected by the RNA notified the Coast Guard that they were concerned about the economic impact of the RNA's positive barge control provisions. Acting on these concerns, the Coast Guard published an Interim Rule in the **Federal Register** (64 FR 12746) on March 15, 1999, that temporarily authorized COTPs to exempt vessels from the positive barge control provisions based upon equivalent levels of safety. The Interim Rule also sought out comments on the economic impact of the positive barge control provisions on small entities. We conducted a public meeting on April 16, 1999 in New Haven, CT. The meeting was attended by 13 individuals, and there were 8 speakers.

Background and Purpose

Prior to publication of the Interim Rule, 33 CFR 165.100(d)(1)(i) required that single-hull tank barges carrying petroleum and operating in the navigable waters of the First Coast Guard District either be towed by a tug equipped with twin-screws and two engines, or be escorted by a second tug. Double-hull tank barges and certain small barges in confined waters were exempt from this requirement. The positive control provision in the RNA addressed the hazards associated with operating single-hull tank barges with single-screw tugs in the First Coast Guard District waters. However, it provided little flexibility to address special circumstances. This Final Rule provides COTPs with the authority to address special circumstances. This exemption authority is consistent with RRAT report that had recommended that the Coast Guard establish a regulatory provision authorizing exemptions in limited circumstances.

Under the final regulations, the COTP may consider exempting operators from the positive barge control provision upon the operator's demonstration of equivalent measures of safety. The exemptions, if granted, would result in the continued use of a single-screw and/or single-engine tug to tow a single-hull tank barge without an escort tug on the navigable waters of the First Coast Guard District. In determining whether to grant an exemption of the positive control provisions, the COTP will consider a variety of factors including, but not limited to, the availability of timely on-call tug assistance, the time of transit, the route, the weather, environmental factors, the amount and grade of cargo, the existence and sufficiency of anchoring and retrieval equipment on a manned barge, transits in protected waters, and the construction of the tank barge, as well as the operators' overall safety record.

Requests for exemptions must be submitted in writing to each COTP in whose zone the barge intends to operate. Operators whose vessels transit multiple COTP zones must apply for the exemption from each COTP. COTPs will consult with each other in such cases. The Final Rule is responsive to the needs of small businesses, and gives the COTP the flexibility to weigh risk while continuing to safeguard the environment.

This rule makes permanent the exemption process of the Interim Rule, which is set to expire on June 30, 2000. Because of the need to keep that exemption process authority, under U.S.C. 553(d)(1), this rule is effective in less than 30 days. Additionally, to remain responsive to industry needs while continuing to protect the environment and for the other reasons stated in the preamble of this rule, the Coast Guard finds good cause under 553 U.S.C. (d)(3) for making this rule effective in less than 30 days.

Discussion of Comments and Changes

The Coast Guard received 84 written comments on the Interim Rule, contained in 9 individual letters to the docket; we received another 22 comments at the public meeting.

General Comments

Several comments generally questioned the effectiveness of the RNA on improving safety. Five comments stated that single-screw tugs have decided safety advantages over twin-screw tugs, especially in narrow channels, shallow drafts, and tight bends where the danger to safe navigation is increased. A related comment suggested that, rather than try to eliminate a whole class of vessels, the Coast Guard eliminate or minimize risk as much as possible.

The overall purpose of the RNA is to improve safety and reduce the risk of an oil spill in First Coast Guard District waters. We believe that these regulations are effective safety measures, because they require operational planning, increase underway safety communications, and improve emergency response preparation. While single-screw tugs may have advantages, they do not have a redundant control system to serve as backup in the event the primary system fails to avoid a collision or grounding. We have not eliminated single-screw tug operation.

The RNA does not preclude the use of single-screw tugs, but it does generally require that tank barges under tow by these tugs employ an escort. Single-screw, or single-engine tugs may continue to tow double-hull barges, or seek an exemption for towing a tank barge with a capacity of less than 25,000 barrels in an area of limited depth or width. The Final Rule adds another exemption authority to address unique situations in which an equivalent level of safety is provided by the operator. By applying the RNA's measures together with those safety measures included in the two national rulemakings for Fire Protection [64 FR 56257] and Emergency Control Measures [65 FR 31806], the Coast Guard will lower the risk of pollution due to spills from tank barges.

Two comments suggested that the Coast Guard create a matrix to assess risk and screen vessels for safety. Consideration for continued service should be based on safety factors that will prevent oil pollution. Some companies already employ numerous operational and equipment precautions to ensure safety; these are things that should be determining factors in assessing risk. A related comment suggested that the RNA include a ''grandfather'' clause permitting those small entities that have been hauling petroleum with single-screw tugs prior to January 29, 1999, to continue this method of transporting.

We agree that a matrix may be a useful tool for COTPs to gauge risk factors when considering requests for exemption in some cases. A COTP is not limited in the way he or she evaluates an application. However, we note that the use of a single matrix in each of the five different COTP zones would be difficult in light of risks that may be unique to a particular COTP zone. Companies that employ preventive measures would be advised to identify those measures in any application for exemption under this Final Rule. The COTP will evaluate those measures in the equivalency determination. The result may have the same effect as ''grandfathering'' in some cases.

Three comments focused on the importance of the tug operator, and suggested enhanced qualification and skill standards consistent with the 1995 amendments to the International Convention on Standards of Training, Certification and Watchkeeping for Seafarers (STCW).

The Coast Guard encourages operators, on their own initiative, to increase training and improve their professional skills to further good marine practices. This rule does not preclude any owner of a tank barge from adherence to higher watchkeeping standards. However, Coast Guard District Commanders, including the First District Commander, do not generally have independent authority to establish STCW requirements.

Several comments urged that the Coast Guard establish procedures for transforming the temporary exemption into a permanent program, and that such a program would comply with the meaning and intent of the RRAT, which recommended waivers in certain instances.

We agree. This Final Rule makes a permanent exemption authority consistent with the recommendations of the RRAT report. The purpose of the Interim Rule was to solicit comments on the measures of positive control in the RNA, particularly those from small businesses. Following the period for public comment, and having held a public meeting, the Coast Guard re-evaluated the risks posed by the continued use of a single-screw tug while operating on the temporary exemption. Since we inserted the authority into the RNA, COTPs have evaluated 38 applications under the temporary exemption authority and granted 32 exemptions. Although no oil spills have been associated with vessels operating under the exemption, we acknowledge that the data is limited to a relatively brief one-year period of time.

One comment suggested that the Coast Guard establish a committee to study, in detail, how many small entities are involved and the type and extent of economic dislocation caused by the regulation. The Office of Advocacy of the Small Business Administration (SBA) has maintained that the use of general statistics is not an effective way to determine the impact of a regulation on any particular small business and that ''Small Entity'' does not adequately segment the small towing firms affected.

The Coast Guard relied upon the SBA definition of small entity when promulgating this Final Rule. The SBA regulations require the use of their small entity definition in the various industries unless the agency has promulgated specific definitions. The Coast Guard obtained sufficient information when we re-opened the docket with the Interim Rule and conducted additional analysis of the impact on small businesses. The Coast Guard notified over 180 owners of tugs and tank barges in the Northeast, to inform them of the rulemaking and solicit the request for comments from small entities to describe the impact of the positive barge control provisions.

Several comments addressed the cost and safety of towing gear for anchoring and emergencies. They stated that the practice of picking up loose barges with emergency towing gear would place personnel and equipment in peril. Another comment stated that an engine-room fire aboard any tug, single or twin-screw, would render that tug helpless as all engine compressors, steering, and electric wiring are in one engine room.

Anchoring systems and firefighting were not the purpose of this rule. These issues were, however, addressed by the national rulemakings, Emergency Control Measures for Tank Barges, and Fire Protection previously noted.

Comments on Particular Features of Preamble

Comments on Applicability of Rule

One comment recommended that § 165.100(d)(1)(i) be amended to apply to only single-hull tank barges with a capacity of more than 7,500 barrels of oil. The comment recommended a new exemption provision be established to allow COTPs to grant exemptions to single-hull tank barges of this capacity.

We agree that COTPs should have authority to issue exemptions, and have amended the regulations to reflect this change. As such, COTPs may allow a tank barge owner to continue using a single-screw, single-engine tug to tow the barge, provided they employ alternative measures for the positive control of the barge. Rather than limit the exemption criteria solely to barge capacity, however, this rule requires COTPs to consider a host of factors including the barge capacity.

Two comments stated that to achieve its stated goal of reducing the risk of oil spills, the rulemaking's escort tug requirements should apply to tank ships as well as tank barges, or to neither. The rule does not address the considerably greater risks posed by tank ships but poses increased requirements only on tank barges that carry far less oil.

It is true that the RNA does not address tank ships, and neither the RRAT nor the Act addressed that class of vessels. But we disagree that the escort tug should apply to neither tank ships nor tank barges as a result. Towing vessels provide the propulsion for tank barges but are largely unregulated. Tank ships are essentially a towing vessel and tank barge combined as an integral unit and are heavily regulated to reduce the risk of oil spills. In several respects, the RNA, combined with the two national rulemakings previously noted, attempts to raise the level of safety on tugs and tank barges to that of tank ship operations.

Four comments stated their appreciation for the expanded exemption provisions of § 165.100(d)(1)(iii) in the Interim Rule; however it claims that the exemption does not go far enough. Since the RNA is based on a single-hull versus double-hull distinction, it should follow the same timeline established by Congress in OPA 90 for the phase-out of single-hull tank vessels.

Neither the RNA in general, nor the positive barge control provisions specifically, have any impact on the statutory phase-out period for single-hull tank vessels. The RNA, simply, imposes operational requirements on single-hull tank vessels until they are phased-out in accordance with law. By amending the positive control measures, this rule increases the opportunities for single-screw tugs to continue towing single-hull tank barges.

Comments on Background and Purpose

Six comments state that this rulemaking imposes new regulations on the entire single-hull segment of the tank barge industry in the Northeast without properly documenting oil spills resulting from single-screw propulsion failures. The incident that prompted the legislation underlying this rulemaking had nothing to do with the number of screws on the tug.

As the comment notes, legislation underlies the rulemaking. The RNA establishes four operational measures for the safety of towing vessels and tank barges. These measures are preventive in nature and are designed to increase safety in an emergency. Clearly, it was the intent of the Congress, the RRAT, and the Coast Guard to establish measures to improve the safety during tank barge transits. While the NPRM does identify 12 examples where a redundant propulsion system prevented a grounding or collision, neither the Coast Guard, nor the RRAT sought to make a comparison between tugs with redundant systems and those without. Instead, the intent was to increase the safety of tank barge transits by requiring a redundancy, or ensuring that those tugs without redundant systems had tug escorts.

Comments on Regulatory Analysis

One comment stated that the Summary of Costs assigns arbitrary hourly cost figures for charter tugs, and does not address the fact that in some cases these vessels may not even be available. The comment states that the cost of $300 per hour is arbitrary when you consider different ports. Worse than the cost per hour is the issue of availability which is uncertain in some areas where no hourly figure can accurately estimate the rule's impact.

We note these comments and have revised our analysis in response to the comments received during the comment period. The data published in the Summary of Costs were gathered from sources such as the Army Corps of Engineers (ACOE) Navigation Data Center, the Coast Guard's Marine Safety Information System, and included telephone surveys with a number of towing vessel and tank barge owners. The Coast Guard analyzed these data, which it published for public consideration. We have revisited our data sources and revised upward the number of impacted transits. The cost of $300 per hour was used after calling industry sources; we consider that figure to be a reasonable approximation. We note that no comments suggested a more appropriate estimate.

One comment stated that the Summary of Costs provided no allowance for added down-time for tugs and barges while awaiting voyage plan approval, or while waiting for assist tugs to arrive. Additional costs are incurred as the result of the crew training for anchoring and pickup gear.

We note these comments. The Voyage Plan is only required to be complete before departure, and does not require approval. The cost of crew training for anchoring and retrieval gear is the subject of a separate rulemaking published by Coast Guard Headquarters. However, we have added the cost of training when the escort tug is not familiar with the barge operations.

Two comments stated that the Summary of Costs does not address the issue of lost opportunity costs to impacted companies and the communities they serve. When a barge cannot be used because both single-screw tugs are away with a tank barge, revenue is lost or delayed.

We note these comments. In the short run, while impacted companies are realigning their assets in order to be in compliance with the RNA, there may be some lost profit opportunities for barges. We have taken this into account in our revised Summary of Costs. We note that with the exemptions this may not be a factor at all. We also note that since the interim regulations have been in effect, the Coast Guard has not received a single complaint of a petroleum shortage that was created as a result of these regulations.

Four comments stated that the analysis does not properly address the substantial costs of purchasing additional tugs to comply with the positive control measures. Costs for additional tugs are prohibitively expensive for small businesses and could cause the business to close its doors.

We disagree that the Coast Guard is requiring small businesses to purchase additional tugs. Instead, small businesses have other options available in § 165.100(d)(1)(i) for continued service. The COTP may grant exemptions to those small businesses that employ alternative safety measures for their current vessels.

Four comments state that compelling the use of twin-screw tugs has forced an unfair economic hardship on small businesses, and has seriously depressed the value of single-screw tugs. The analysis does not quantify or address the rulemaking's effect on single-screw tugs, whose value has fallen by about a third since this rulemaking was proposed. Additionally, two comments stated that their small company made a large investment in a single-skin barge before they became aware of the rulemaking. The new regulation has drastically changed their financial equation that served as the basis to purchase this barge.

We agree that the rulemaking may have placed an economic burden on certain small businesses. After publication of the Final Rule on December 30, 1998, the Coast Guard heard from several small tug and tank barge companies claiming that they had been unaware of the rulemaking, and had failed to submit comments to the docket voicing their opinion. As a result, the Coast Guard reopened the docket to learn more about the affects of the positive control measures on their small businesses. In response to the comments received, the First District Commander has amended the regulations to permit companies that own single-screw tugs to continue in the tank barge service, provided alternative safety measures are approved by the COTP. The new exemption may reduce the unexpected costs for those companies that receive exemptions, and will thereby offer them relief for continued service.

Four comments stated that the analysis appears faulty and does not explain how the Regulatory Assessment led the Coast Guard to enact extra burdens on the operators of single-screw tugs. The analysis shows a tug escort rule effectiveness of $67,561.55 per barrel of oil not spilled which seems way too high. The $32,103 cost-effectiveness figure published in the **Federal Register** was high. It looks like the Coast Guard may require the transportation industry to spend over $12 million without preventing any oil from spilling.

We disagree that the RNA will not prevent oil spills from tank barges. However, we have revised the regulatory assessment; a copy is available in the docket.

One comment asked whether the Coast Guard wasn't already doing enough with regulations to prevent another NORTH CAPE scenario. Other rulemakings, such as Fire Suppression and the Emergency Control Measures for Tank Barges, will all reduce the likelihood of oil spilling from barges. Benefit figures for the RNA may be lower because another rule would have prevented many accidents from happening. Under that rule as proposed, a single-hull barge being towed will be fitted with an anchoring system required by a separate rulemaking. The analysis does not properly address how the rulemaking for Emergency Control Measures for Tank Barges and other OPA 90 rulemakings will prevent groundings.

We note these comments. The analysis did take into account the potential benefits of these other rulemakings. Please see the ''Benefits'' section of the Regulatory Assessment available in the docket.

One comment asked whether this rulemaking imposed operational conditions, which are, instead, actually equipment regulations that require a second engine and a second screw for the tugs.

The RNA does not contain an option for installing a second engine and second screw. Any such actions would be taken independent of the RNA, even though the result may be that the affected tug would be subject to fewer RNA requirements.

One comment stated that the rulemaking should be declared null and void because the rule makes no mention of hazardous areas or hazardous conditions.

We disagree that the RNA was not based on hazardous conditions. The premise of this rulemaking was the inherent risks associated with the waterborne transportation of petroleum products in the Northeast, which is subject to high-risk transit areas. As a heavily industrialized and oil-dependent region of the country, the Northeast is subject to a high volume of tank barge traffic, particularly during the winter months, due to the demand for home heating oil. These operating conditions include dangerous and often violent winter storms that are unique to the region, and therefore create substantial hazards for the vessel's crew and the environment. As described in the rulemaking's Background and Purpose of the NPRM, the First Coast Guard District has experienced 289 marine casualties involving tank barges from 1992 through 1996. Given this high number of tank barge-related casualties and the potential for another major pollution incident, the Coast Guard promulgated this RNA as required by law, citing these hazardous conditions.

One comment stated that the Coast Guard should explain why it wants to place tug escort rules in 33 CFR part 165 when there are regulations on tug escorts found in 33 CFR part 168. While the Coast Guard did not require tug escorts in the waters of the First District during the 1994 rulemaking, the commentor asks what has changed between 1994 and 1999? Accident histories do not justify the change of position.

We disagree, and note that these regulations are the result of the NORTH CAPE spill in January 1996. We also find that Part 165 is the appropriate subpart for these regional regulations. This subpart permits the District Commander to control vessel traffic operating conditions within his area of responsibility. As it establishes a RNA, this rulemaking is limited to those waters under the authority of the First District Commander. Accident histories have long been a source of legislated governance of the marine-transportation industry; the most noteworthy of which is the Oil Pollution Act of 1990 which was the result in large part from the grounding of the EXXON VALDEZ.

One comment stated that their company lost revenue because the rule went into effect at the end of the industry's season. There are customers that will not hire tug companies even if they hold exemptions. This rulemaking creates an unjust situation for small entities that are trying to comply with the law. Additionally, one comment stated that this rule will have a significant economic impact on their business. To purchase a new twin-screw, twin-engine tug will cost $25,000 per month in a mortgage payment. The requirements will not affect large businesses, but may put smaller businesses out of business.

We have amended the rulemaking to ease the economic burden on small entities. By allowing the COTP to grant exemptions for single-screw tugs to continue in towing tank barges, the First District Commander is responsive to the concerns of small entities. This amendment offers relief to those small entities that might experience economic hardship by offering them the option of applying for an exemption for continued service from the COTP.

One comment stated that all federal agencies are required to identify alternative regulatory approaches for small business, small governmental jurisdictions and non-profit organizations.

We agree that the Coast Guard is responsible for considering the economic impact on small entities. As such, the Coast Guard believes that this amended rulemaking satisfies the requirements of the Regulatory Flexibility Act (5 U.S.C. 601 *et seq.*) by offering alternatives to small businesses in § 165.100(d)(1)(iii) that will allow them to continue to tow tank barges in the Northeast and accordingly does not place a substantial impact on a significant number of small businesses.

Regulatory Assessment

This rule is not a significant regulatory action under 3(f) of Executive Order 12866 and does not require an assessment of potential costs and benefits under section 6(a)(3) of that Order. It has not been reviewed by the Office of Management and Budget (OMB) under that Order. It is not significant under the regulatory policies and procedures of the Department of

Transportation (DOT) (44 FR 11040; February 26, 1979).

A Regulatory Assessment under paragraph 10e of the regulatory policies and procedures of DOT is available in the docket for inspection or copying where indicated under **ADDRESSES**. A summary of the Assessment follows:

Summary of Benefits

The principal benefits of this rule are protection against oil spillage, human casualties, and property damage that may result from navigation-related incidents of tank barges and towing vessels while underway in the navigable waters of the First Coast Guard District. Quantifiable benefits accrue from averted pollution measured in barrels of oil not spilled, averted injuries and deaths, and averted damage to vessels and property measured in dollars.

Using information from the Coast Guard Marine Safety Management System from January 1, 1992, to December 31, 1996, we reviewed 96 tank barge casualty cases. These casualties involved vessels that were underway within the boundaries of the First Coast Guard District and which would have been affected by this rule if it had been in effect. This period represents some post OPA–90 experience, is long enough to survey a significant number of casualties, and short enough to avoid old problems which are now solved. These 96 cases provided the pool from which the benefits are estimated. During this base period, there was no reported oil spilled from double-hull barges.

For all four measures, we reviewed each casualty case report to assess whether the casualty could have been prevented or diminished in severity by this rule. A team of Coast Guard analysts assigned an effectiveness degree to which each measure would have positively affected each casualty case. We tabulated data on deaths and injuries, oil spillage, and dollar totals reported for damage to the tank barges, towing vessels, piers, or other structures, and estimated benefits for each measure adjusted to the accurate degree of effectiveness.

Over the period of analysis, the present value of total damages and deaths avoided by the rule would be $2,192,473 (1998 dollars). Total pollution avoided by the rule would be 1,368.65 barrels. These figures are different from those obtained in earlier Regulatory Assessments due to updating and improvement of the data and methodology.

Summary of Costs

Businesses that use tank barge and towing vessels within the geographic boundaries of the First District, as well as the tank barge and towing vessel industries themselves, will bear the majority of the costs of this rule.

The cost of this rule is the sum of costs from the requirements for positive control for barges, enhanced communications, voyage planning, and restricted navigation areas. These anticipated costs recognize that many of the towing vessels and tank barges operating within the geographic boundaries of the First District are already in compliance with these requirements.

(1) Positive Control for Tank Barges: Data from the First District and U.S. Army Corps of Engineers indicated that there are 21,640 transits occurring within the District each year. Of these transits, we estimate 1.95%, or 421, involve a single-hull, petroleum-laden tank barge being towed by a tug without twin engines or twin screws, and thus, this rule would require an escort or assist tug. The cost of an escort or assist tug is $300 an hour. It is assumed this escort or assist tug would, on average, spend 20 hours in round trip service on each transit. The cost of the tug for a single transit would therefore be $6,000. Over the period of analysis, the present value total cost of the escort or assist tug escorts would be $21,608,076 (1998 dollars).

Another cost of the tug-escort requirement is the cost to familiarize the crew of the escort tug if they are not familiar with the anchor and breakaway gear of the barge they will escort. We estimate this training would be necessary for 60% of the transits and the training would take an average of one hour. Over the period of analysis, the present value total cost of training would be $215,911.

This requirement also may cause some businesses to incur other costs. First, the resale prices of the existing single-screw tugs in the First Coast Guard District may be slightly lower for at least some period due to this rulemaking. We estimate the present value total cost from lost resale value would be $150,000. Second, in the short run, while impacted companies are realigning their assets in order to be in compliance with the tug-escort requirement, there may be some lost profit opportunities for barges. We estimate the present value total cost in terms of lost profit would be $50,000. With permanent waivers, we expect the impact of lost profit or lost resale value may be reduced.

The present value total cost of the positive-control requirement would be $22,023,987 ($21,608,076 + $215,911 + $150,000 + $50,000 = $22,023,987).

(2) Enhanced Communications: This rule would require the person(s) on watch on a towing vessel to make approximately eight securite calls during the average transit in the First District. The cost of this requirement to the operator would be the time added to the crews' watch duties per transit and/or the diminished productivity per transit as a result of this requirement.

Each securite call would take about 0.00833 hours (or 0.5 minutes) per transit. This time represents the number of hours (or minutes) that a crewmember would give up doing other activities during a transit. We assume that the master makes half of the securite calls and the mate makes the other half. Based on a rate of $350 per 12-hour day, we estimate the average hourly wage for a master of a towing vessel would be $29.17. Based on a rate of $250 per 12-hour day, we estimate the average hourly rate for a mate would be $20.83. As each person makes 4 calls per transit, the total labor time and total labor cost per transit would be 0.0666 hours/transit and $1.67/transit, respectively (8 calls/transit × 0.00833 hours/call = 0.0666 hours/transit and [($29.17/hour × 0.033 hours/transit) + ($20.83/hour × 0.033 hours/transit) = $1.67/transit]).

With 11,902 transits of petroleum-laden tank barges (55% of 21,640 total transits) within the First Coast Guard District each year, the total annual time burden of this requirement would be 792.67 hours, and the potential opportunity cost would be $19,837 per year ($1.6667/transit × 11,902 transits/year = $19,837/year). Over the period of analysis, the present value total cost of this requirement would be $187,393 in 1998 dollars.

Given the existing practices that occur during typical watch duties, we expect the time necessary to make each call would not increase the time spent performing watch duties nor decrease productivity of either crewmember on watch. Without an increase in labor time devoted to watch duties or decrease in productivity, the financial cost of the enhanced-communications requirement would be $0.

(3) Voyage Planning: Currently we estimate 21,640 transits of tank barges in the First Coast Guard District each year. The Coast Guard estimates that 90% (or 19,476) of these transits already are in compliance with this proposed requirement. Thus, 10% or 2,164 transits currently lack a voyage plan. Further data from the First Coast Guard

District indicates that 55% of the annual transits involve petroleum-laden tank barges. Therefore, we estimate that 55% or 1,190 of the 2,164 petroleum-laden tank barge transits currently lack a voyage plan.

For each transit, as a representative of the owner or operator, the master of the towing vessel spends approximately 0.5 hours (or 30 minutes) preparing a voyage plan. The average wage rate for a towing vessel master is estimated to be $29.17 per hour. The annual cost of voyage planning would be $17,357 ($29.17/hour × 0.5 hours/transit × 1,190 transits/year = $17,357/year). Over the period of analysis, the present value total cost of the voyage-planning requirement would be $163,965 (in 1998 dollars).

(4) Restricted Navigation Areas: This proposed requirement would establish two restricted navigation areas that would bar the traffic of towing vessels with petroleum-laden tank barges. These two areas are Fishers Island Sound and the eastern portion of Cape Cod Bay. Historically and currently there has been no traffic of towing vessels with petroleum-laden tank barges operating within either of these two areas. Thus, the cost of the restricted navigation requirement would be $0.

Summary

The present value total cost of this rule would be $22,187,952 ($22,023,987 for positive control of barges + $0 for enhanced communications + $163,965 for voyage planning + $0 for restricted navigation areas = $22,187,952). In terms of cost-effectiveness, this rule would prevent 1,368.65 barrels of pollution at a cost of $16,212 per barrel.

Small Entities

Under the Regulatory Flexibility Act (5 U.S.C. 601 *et seq.*), the Coast Guard must consider whether this rule will have a significant economic impact on a substantial number of small entities. ''Small entities'' include small businesses, not-for-profit organizations that are independently owned and operated and are not dominant in their fields, and governmental jurisdictions with populations of less than 50,000.

The rule would require the following:

(1) positive control measures for tank barges, which require an escort or assist tug during all transits involving towing vessels not equipped with twin-screw/twin-engine propulsion, and that are engaged in towing petroleum-laden single-hull tank barges in the First Coast Guard District;

(2) operators of vessels towing petroleum-laden tank barges initiate and broadcast securite calls on radio identifying their position at specified locations during a transit in the First District;

(3) a voyage plan be prepared prior to a petroleum-laden tank barge voyage within the First District; and

(4) two restricted navigation areas within the First District that would bar traffic of towing vessels with petroleum-laden tank barges.

The maximum estimated cost of this regulation would be $22,187,952 with the majority of the cost (or 99%) being the cost of the positive-control requirement. The voyage-planning requirement would have an estimated cost of $163,965, while the enhanced-communications and restricted-navigation-areas requirements would be expected to have zero financial cost.

We estimate there are currently 11,902 petroleum-laden tank barge transits within the First District per year. We estimate that approximately 95% of the towing vessels that tow petroleum-laden tank barges in the First District are twin-screw, which do not require positive control measures. Also exempted from the positive-control requirement would be all double-hull tank barges that currently make up 29% of the tank barge fleet. Consequently, we estimate that 421 transits would be impacted by the positive-control requirement.

The Small Business Administration, in 13 CFR 121, defines small businesses by either the number of employees or by the amount of a company's receipts in dollars. For examples, a business in the towing-&-tugboat-services industry that has annual revenue no greater than $5 million is a small entity. However, a business in the water-transportation-of-freight industry that has no more than 500 employees would be a small entity. The Coast Guard does not collect revenue nor number-of-employee information from the businesses it regulates; however, information can be obtained from sources such as Dun & Bradstreet or the U.S. Census. According to *Dun & Bradstreet Marketplace 1999*, the percentage of companies nationally with annual revenue equal to or less than $5 million in the towing-&-tugboat-services industry (SIC Code 4492) is about 86%. Regionally, for companies that are located in one of the states within the boundaries of the First District which are in SIC Code 4492, approximately 90% would be considered a small entity. For water transportation of freight, n.e.c. (SIC Code 4449), the percentage of companies nationally with a maximum of 500 employees is approximately 95%, while for companies located in one of the states within the boundaries of the First Coast Guard District that percentage is approximately 95% as well.

The Coast Guard's Marine Safety Management System (MSMS) database identifies 34 different companies that own tank barges certificated under subchapter O or D within the boundaries of the First District. The MSMS database also identifies 124 different companies located in one of the states within the boundaries of the First District that own towing vessels. These towing vessels are not owned strictly by companies that are engaged in towing & tugboat services or water transportation of freight. Other owners of towing vessels include construction companies and governments.

It is the businesses who hire the towing vessels and tank barges for transporting their goods that directly incur the costs of this rulemaking by having to pay for the escorts or assist tugs. However, some towing vessels and barge owners, the majority of which are small entities, may be affected by the positive-control requirement if they can no longer provide tug service at a competitive price due to the requirement that they employ an escort or assist tug.

On March 15, 1999, an Interim Rule allowed the local COTP to authorize temporary exemptions to the positive-control requirement established in the December 30, 1998, Final Rule. Since inserting this authority into the rule, thirty-two temporary exemptions have been granted with no pollution incidents. These exemptions expire June 30, 2000. Comments from industry have requested that the Coast Guard establish procedures that would transform the temporary exemption into a permanent exemption. In an effort to reduce the impact of the positive-control requirement, this Final Rule allows the COTP to authorize exemptions to the positive-control requirement, and removes the temporary nature of the exemptions that were granted in the Interim Rule. Accordingly, the Coast Guard certifies under 5 U.S.C. 605(b) that this final rule will not have a significant economic impact on a substantial number of small entities.

Assistance for Small Entities

In accordance with section 213(a) of the Small Business Regulatory Enforcement Fairness Act of 1996 (Pub. L. 104–121), the Coast Guard offered to assist small entities in understanding the rule so that they can better evaluate its effects on them and participate in the rulemaking. Commander (m), First Coast Guard District, provided explanatory

information to a number of individuals by telephone.

The Small Business and Agriculture Regulatory Enforcement Ombudsman and 10 Regional Fairness Boards were established to receive comments from small businesses about enforcement by Federal agencies. The Ombudsman will annually evaluate enforcement and rate each agency's responsiveness to small business. If you wish to comment on enforcement by the Coast Guard, call 1–888–REG–FAIR (1–888–734–3247).

Collection of Information

The Final Rule calls for no collection of information under the Paperwork Reduction Act of 1995 [44 U.S.C. 3501 *et seq.*].

Impact on Federalism

This rule would revise the rules at 33 CFR 165.100(d)(1)(iii) that address navigational safety, and voyage planning for towing vessels. We have analyzed this rule in accordance with the principles and criteria contained in Executive Order 13132. It is well settled that States are preempted from establishing any requirements for tank vessels and the vessels that tow them in the categories of design, construction, alteration, repair, maintenance, operation, equipping, personnel qualification, and manning. See the decision of the Supreme Court in the consolidated cases of *United States* v. *Locke* and *Intertanko* v. *Locke* _____ U.S. _____, 2000 U.S. LEXIS 1895 (March 6, 2000). Thus, this entire rule falls within preempted categories. Because States may not promulgate rules the categories set out, preemption is not an issue under that Order.

Unfunded Mandates

Title II of the Unfunded Mandates Reform Act of 1995 (UMRA) [Pub. L. 104–4, 109 Stat. 48] requires Federal agencies to assess the effects of certain regulatory actions on State, local, and tribal governments, and the private sector. UMRA requires a written statement of economic and regulatory alternatives for rules that contain Federal mandates. A ''Federal mandate'' is a new or additional enforceable duty imposed on any State, local, or tribal government, or the private sector. If any Federal mandate causes those entities to spend, in the aggregate, $100 million or more in any one year, the UMRA analysis is required. This Final Rule would not impose Federal mandates on any State, local, or tribal governments, or the private sector.

Environment

The Coast Guard considered the environmental impact of this rule and concluded that under figure 2–1, paragraphs 34(g) and (i) of Commandant Instruction M16475.1C, this rule is categorically excluded from further environmental documentation. A ''Determination of Categorical Exclusion'' is available in the docket for inspection or copying where indicated under **ADDRESSES**.

List of Subjects in 33 CFR Part 165

Marine safety, Navigation (water), Reporting and recordkeeping requirements, Waterways.

For the reasons discussed in the preamble, the Coast Guard amends 33 CFR part 165 as follows:

PART 165 [AMENDED]

1. The citation of authority for Part 165 continues to read as follows:

Authority: 33 U.S.C. 1231; 50 U.S.C. 191; 33 CFR 1.05–1(g), 6.04–1, 6.04–6, 160.5; 49 CFR 1.46.

2. Revise § 165.100(d)(1)(iii) to read as follows:

§ 165.100 Regulated Navigation Area: Navigable Waters within the First Coast Guard District

* * * * *

(d) * * *

(1) * * *

(iii) The cognizant Captain of the Port (COTP), upon written application, may authorize an exemption from the requirements of paragraph (d)(1)(i) of this section for—

(A) Any tank barge with a capacity of less than 25,000 barrels, operating in an area with limited depth or width such as a creek or small river; or

(B) Any tank barge operating on any waters within the COTP Zone, if the operator demonstrates to the satisfaction of the COTP that the barge employs an equivalent level of safety to that provided by the positive control provisions of this section. Each request for an exemption under this paragraph must be submitted in writing to the cognizant COTP no later than 7 days before the intended transit.

* * * * *

Dated: May 26, 2000.

Robert F. Duncan,

Captain, U.S. Coast Guard, Acting Commander, First Coast Guard District.

[FR Doc. 00–14110 Filed 6–5–00; 8:45 am]

BILLING CODE 4910–15–U

DEPARTMENT OF TRANSPORTATION

Coast Guard

33 CFR Part 165

[CGD05–00–018]

RIN 2115–AA97

Safety Zone; Ocean View Beach Park, Chesapeake Bay, VA

AGENCY: Coast Guard, DOT.

ACTION: Temporary final rule.

SUMMARY: The Coast Guard is establishing a temporary safety zone for the Shore Thing Independence Day Celebration fireworks display to be held at the Ocean View Beach Park, Chesapeake Bay, Virginia. This action will restrict vessel traffic on the Chesapeake Bay within a 500-foot radius of the fireworks display, which will be fired from shore. The safety zone is necessary to protect mariners and spectators from the hazards associated with the fireworks display.

DATES: This rule is effective from 9 p.m. until 10 p.m. on July 1, 2000.

ADDRESSES: You may mail comments and related material to USCG Marine Safety Office Hampton Roads, 200 Granby Street, Norfolk, VA, or deliver them to the same address between 8 a.m. and 4 p.m., Monday through Friday, except Federal holidays. USCG Marine Safety Office Hampton Roads maintains the public docket for this rulemaking. Comments and materials received from the public, as well as documents indicated in this preamble as being available in the docket, will become part of this docket and will be available for inspection or copying at the above address between 8 a.m. and 4 p.m., Monday through Friday, except Federal holidays.

FOR FURTHER INFORMATION CONTACT: Chief Petty Officer Roddy Corr, project officer, USCG Marine Safety Office Hampton Roads, telephone number (757) 441–3290.

SUPPLEMENTARY INFORMATION:

Request for Comments

Although this rule is being published as a temporary final rule without prior notice, an opportunity for public comment is nevertheless desirable to ensure the rule is both reasonable and workable. Accordingly, we encourage you to submit comments and related material. If you do so, please include your name and address, identify the docket number for the rulemaking (CGD05–00–018), indicate the specific section of this document to which each comment applies, and give the reason

for each comment. Please submit all comments and related material in an unbound format, no larger than 8.5 by 11 inches, suitable for copying. If you would like to know they reached us, please enclose a stamped, self-addressed postcard or envelope.

Regulatory Information

We did not publish a notice of proposed rulemaking (NPRM) for this regulation. Under 5 U.S.C. 553(b)(B), the Coast Guard finds that good cause exists for not publishing an NPRM. We were not notified of this event in sufficient time to publish an NPRM, allow for comments, and publish a final rule in sufficient time to allow notice to the public for the fireworks display. In previous years, this event and similar ones have been held without incident and without comment from the public regarding the Coast Guard's establishment of limited safety zones around the fireworks display.

Background and Purpose

The Coast Guard is establishing a temporary safety zone for the Shore Thing Independence Day Celebration fireworks display to be held at Ocean View Beach Park, Chesapeake Bay, Virginia. The safety zone will restrict vessel traffic within a 500-foot radius of the fireworks display, which will be fired from land, in approximate position 36° 57.30′ N, 076° 15.00′ W. The safety zone is necessary to protect mariners and spectators from the hazards associated with the fireworks display.

The safety zone is effective from 9 p.m. until 10 p.m. on the July 1, 2000. Additional public notifications will be made prior to the event via marine information broadcasts.

Regulatory Evaluation

This rule is not a ''significant regulatory action'' under section 3(f) of Executive Order 12866 and does not require an assessment of potential costs and benefits under section 6(a)(3) of that Order. The Office of Management and Budget has not reviewed it under that Order. It is not ''significant'' under the regulatory policies and procedures of the Department of Transportation (DOT) (44 FR 11040; February 26, 1979). This temporary final rule only affects a limited area for one hour, alternative routes exist for maritime traffic, and advance notification via marine information broadcasts will enable mariners to plan their transit to avoid entering the restricted area. The Coast Guard expects the economic impact of this rule to be so minimal that a full regulatory evaluation under paragraph 10(e) of the regulatory policies and procedures of the DOT is unnecessary.

Small Entities

Under the Regulatory Flexibility Act (5 U.S.C. 601 *et seq.*), the Coast Guard considered whether this rule would have a significant economic impact on a substantial number of small entities. The term ''small entities'' comprises small businesses, not-for-profit organizations that are independently owned and operated and are not dominant in their fields, and governmental jurisdictions with populations of less than 50,000.

The Coast Guard certifies under 5 U.S.C. 605(b) that this rule will not have a significant economic impact on a substantial number of small entities.

This rule will affect the following entities, some of which might be small entities: the owners or operators of vessels intending to operate or anchor in portions of the Chesapeake Bay, Virginia within 500 feet of a shoreside fireworks display at Ocean View Beach Park located in approximate position 36° 57.30′ N, 076° 15.00′ W.

This safety zone will not have a significant economic impact on a substantial number of small entities for the following reasons: This temporary final rule only affects a limited area for one hour, alternative routes exist for maritime traffic, and advance notification via marine information broadcasts will enable mariners to plan their transit to avoid entering the restricted area.

Collection of Information

This rule calls for no new collection of information under the Paperwork Reduction Act of 1995 (44 U.S.C. 3501 *et seq.*).

Federalism

We have analyzed this rule under Executive Order 13132 and have determined that this rule does not have implications for federalism under that order.

Unfunded Mandates Reform Act

The Unfunded Mandates Reform Act of 1995 (2 U.S.C. 1531–1538) governs the issuance of federal regulations that require unfunded mandates. An unfunded mandate is a regulation that requires a state, local, or tribal government or the private sector to incur direct costs without the Federal Government's having first provided the funds to pay those unfunded mandate costs. This rule will not impose an unfunded mandate.

Taking of Private Property

This rule will not effect a taking of private property or otherwise have taking implications under Executive Order 12630, Governmental Actions and Interference with Constitutionally Protected Property Rights.

Civil Justice Reform

This rule meets applicable standards in sections 3(a) and 3(b)(2) of Executive Order 12988, Civil Justice Reform, to minimize litigation, eliminate ambiguity, and reduce burden.

Protection of Children

We have analyzed this rule under Executive Order 13045, Protection of Children from Environmental Health Risks and Safety Risks. This rule is not an economically significant rule and does not concern an environmental risk to health or risk to safety that may disproportionately affect children.

Environment

The Coast Guard considered the environmental impact of this rule and concluded that under figure 2–1, paragraph (34)(g), of Commandant Instruction M16475.lC, this rule is categorically excluded from further environmental documentation. This regulation will have no impact on the environment.

List of Subjects in 33 CFR Part 165

Harbors, Marine safety, Navigation (water), Reporting and recordkeeping requirements, Security measures, Waterways.

For the reasons discussed in the preamble, the Coast Guard amends 33 CFR part 165 as follows:

PART 165—[AMENDED]

1. The authority citation for Part 165 continues to read as follows:

Authority: 33 U.S.C. 1231; 50 U.S.C. 191; 33 CFR 1.05–1(g), 6.04–1, 6.04–6, and 160.5; 49 CFR 1.46. Section 165.100 is also issued under authority of Sec. 311, Pub. L. 105–383.

2. Add temporary § 165.T05–018 to read as follows:

§ 165.T05–018 Safety Zone; Ocean View Beach Park, Chesapeake Bay, Virginia.

(a) *Location.* The following area is a safety zone: All waters of the Chesapeake Bay, within a 500-foot radius of a shoreside fireworks display in approximate position 36° 57.30′ N, 076° 15.00′ W.

(b) *Captain of the Port.* Captain of the Port means the Commanding Officer of the Marine Safety Office Hampton Roads, Norfolk, VA or any Coast Guard commissioned, warrant, or petty officer

who has been authorized to act on his behalf.

(c) *Regulations.* (1) All persons are required to comply with the general regulations governing safety zones found in section 165.23 of this part.

(2) Persons or vessels requiring entry into or passage through this safety zone must first request authorization from the Captain of the Port. The Coast Guard representative enforcing the safety zone can be contacted on VHF marine band radio, channels 13 and 16. The Captain of the Port can be contacted at telephone number (757) 484–8192.

(3) The Captain of the Port will notify the public of changes in the status of this safety zone by marine information broadcast on VHF marine band radio, channel 22 (157.1 MHz).

(d) *Effective Date.* This section is in effect from 9 p.m. until 10 p.m. on July 1, 2000.

Dated: May 26, 2000.

J. E. Schrinner,

Captain, U.S. Coast Guard, Captain of the Port Hampton Roads.

[FR Doc. 00–14153 Filed 6–5–00; 8:45 am]

BILLING CODE 4910–15–U

NATIONAL ARCHIVES AND RECORDS ADMINISTRATION

36 CFR Part 1280

RIN 3095–AA06

Public Use of NARA Facilities; Correction

AGENCY: National Archives and Records Administration (NARA).

ACTION: Final rule; correction.

SUMMARY: NARA published in the **Federal Register** of June 1, 2000 a final rule revising its regulations for use of its facilities. Inadvertently, we omitted a qualification that NARA employees may use the NARA shuttle between the National Archives Building and the College Park facility for official purposes only. This document provides the correct text.

DATES: Effective on July 1, 2000.

FOR FURTHER INFORMATION CONTACT: Shawn Morton at (301) 713–7360, extension 253.

SUPPLEMENTARY INFORMATION: NARA published a final rule document in the **Federal Register** of June 1, 2000, (65 FR 34977) revising 36 CFR part 1280, Public Use of NARA Facilities. Section 1280.14 provides the conditions under which NARA employees, other Government employees, and the public may use the NARA shuttle. NARA has had a long-standing policy that NARA employees may use the shuttle only for official purposes, but this limitation was omitted from the final rule. This correction provides that text.

In the document FR 00–13810 published on June 1, 2000, (65 FR 34977) make the following correction:

§ 1280.14 [Corrected]

1. On page 34979, in the second column, in § 1280.14, correct the fifth line of that section to read ''intended for NARA employees' use for official purposes. Other''.

Dated: June 1, 2000.

Nancy Y. Allard,

Federal Register Liaison Officer.

[FR Doc. 00–14117 Filed 6–5–00; 8:45 am]

BILLING CODE 7515–01–P

ENVIRONMENTAL PROTECTION AGENCY

40 CFR Part 52

[PA 153–4100a; FRL–6702–3]

Approval and Promulgation of Air Quality Implementation Plans; Pennsylvania; Nitrogen Oxides Allowance Requirements

AGENCY: Environmental Protection Agency (EPA).

ACTION: Direct final rule.

SUMMARY: EPA is taking direct final action to approve revisions to the Commonwealth of Pennsylvania State Implementation Plan (SIP). The revision consists of amendments to Pennsylvania's Nitrogen Oxides (NO_X) Allowance Requirements. The revisions implement the Ozone Transport Commission's (OTC) September 27, 1994 Memorandum of Understanding (MOU) in the Commonwealth of Pennsylvania. In accordance with the MOU, the revisions implement the Pennsylvania portion of a regional NO_X cap and trade program that significantly reduces NO_X emissions generated within the Ozone Transport Region (OTR). EPA is approving these revisions in accordance with the requirements of the Clean Air Act.

DATES: This rule is effective on August 7, 2000 without further notice, unless EPA receives adverse written comment by July 6, 2000. If EPA receives such comments, it will publish a timely withdrawal of the direct final rule in the **Federal Register** and inform the public that the rule will not take effect.

ADDRESSES: Written comments may be mailed to David L. Arnold, Chief, Ozone & Mobile Sources Branch, Mailcode 3AP21, U.S. EPA, Region III, 1650 Arch Street, Philadelphia, PA 19103. Copies of the documents relevant to this action are available for public inspection during normal business hours at the Air Protection Division, EPA, Region III, 1650 Arch Street, Philadelphia, PA 19103 and Pennsylvania Department of Environmental Protection, Bureau of Air Quality, P.O. Box 8468, 400 Market Street, Harrisburg, PA 17105.

FOR FURTHER INFORMATION CONTACT: Cristina Fernandez, (215) 814–2178, or by e-mail at fernandez.cristina@epa.gov.

SUPPLEMENTARY INFORMATION:

I. Background

On December 19, 1997, the Pennsylvania Department of Environmental Protection (DEP) submitted a revision to its SIP. The revision consists of amendments to Title 25 of the Pennsylvania Code including Chapter 121—Definitions and Chapter 123—NO_X Allowance Requirements. On December 27, 1999, DEP submitted a subsequent revision to its SIP amending Chapter 121—Definitions and Chapter 123—NO_X Allowance Requirements. This regulation is part of a regional NO_X reduction program based upon an MOU drawn between the member states of the OTC. The OTC adopted a MOU on September 27, 1994, committing the signatory states to the development and implemenation of a two phase region-wide reduction in NO_X emissions by 1999 and 2003, respectively. As reasonably available control technology (RACT) to reduce NO_X emissions was required to be implemented by May of 1995, the MOU refers to the reduction in NO_X emissions to be achieved by 1999 as Phase II; and the reduction in NO_X emissions to be achieved by 2003 as Phase III. The OTC member states include Maine, New Hampshire, Vermont, Massachusetts, Connecticut, Rhode Island, New York, New Jersey, Pennsylvania, Maryland, Delaware, the northern counties of Virginia, and the District of Columbia. All of the OTC members, with the exception of the Commonwealth of Virginia, signed the September 27, 1994 MOU. The OTC MOU requires a reduction in ozone season NO_X emissions from utility and large industrial combustion facilities within the OTR in order to further the effort to achieve the health-based National Ambient Air Quality Standard (NAAQS) for ozone. In the MOU, the OTC states agreed to propose regulations for the control of NO_X emissions in accordance with the following guidelines:

1. The level of NO_X required would be established from a 1990 baseline emissions level.

2. The reduction would vary by location, or zone, and would be implemented in two phases utilizing a region wide trading program.

3. The reduction would be determined based on the less stringent of each of the following:

a. By May 1, 1999, the affected facilities in the inner zone shall reduce their rate of NO_X emissions by 65% from baseline, or emit NO_X at a rate no greater than 0.20 pounds per million Btu. (This is a Phase II requirement.)

b. By May 1, 1999, the affected facilities in the outer zone shall reduce their rate of NO_X emissions by 55% from baseline, or shall emit NO_X at a rate no greater than 0.20 pounds per million Btu. (This is a Phase II requirement.)

c. By May 1, 2003, the affected facilities in the inner and outer zones shall reduce their rate of NO_X emissions by 75% from baseline, or shall emit NO_X at a rate no greater than 0.15 pounds per million Btu. (This is a Phase III requirement.)

d. By May 1, 2003, the affected facilities in the Northern zone shall reduce their rate of NO_X emissions by 55% from baseline, or shall emit NO_X at a rate no greater than 0.20 pounds per million Btu. (This is a Phase III requirement.)

A Task Force of representatives from the OTC states, organized through the Northeast States for Coordinated Air Use Management (NESCAUM) and the Mid-Atlantic Regional Air Management Association (MARAMA), was charged with the task of developing a Model Rule that would implement the program defined by the OTC MOU. During 1995 and 1996, the NESCAUM/ MARAMA NO_X Budget Task Force worked with EPA and developed a model rule as a template for OTC states to adopt their own rules to implement the OTC MOU. The model was issued May 1, 1996. The model rule was developed by and for the OTC states to implement the Phase II reductions called for in the MOU to be achieved by May 1, 1999. The model rule does not include the implementation of Phase III.

Summary of SIP Revision

Pennsylvania's Chapter 121—Definitions and Chapter 123—Nitrogen Oxides Allowance Requirements are based upon and are consistent with the ''NESCAUM/MARAMA NO_X Budget Rule'' issued in May 1, 1996. The model rule was developed by the states in the OTR using the EPA's economic incentive rules (67 FR 16690) which were published on April 7, 1994, as the general regulatory framework.

On December 19, 1997, the Pennsylvania DEP submitted a revision to its SIP. The revision consists of amendments to Title 25 of the Pennsylvania Code including Chapter 121—Definitions and Chapter 123—NO_X Allowance Requirements. Chapter 121—Definitions includes the terms used in Chapter 123—NO_X Allowances Requirements. Chapter 123—NO_X Allowances Requirements consists of twenty sections: (1) Purpose; (2) Source NO_X allowance requirements and NO_X allowance control period; (3) General NO_X allowance provisions; (4) Source authorized account representative requirements; (5) Allowance Tracking System (NATS) provisions; (6) NO_X allowance transfer protocol; (7) NO_X allowance transfer procedures; (8) Source emissions monitoring requirements; (9) Source emissions reporting requirements; (10) Source compliance requirements; (11) Failure to meet source compliance requirements; (12) Source operating permit provision requirements; (13) source record keeping requirements; (14) General NO_X allocation provisions; (15) Initial NO_X allowance NO_X allocations; (16) Source opt-in provisions; (17) New NO_X affected source provisions; (18) Emission reduction credit provisions; (19) Bonus NO_X allowance awards; (20) Audit. Appendix A to Chapter 123 is where the budgeted sources and their NO_X allowance allocations are identified. On December 27, 1999, DEP submitted amendments to its December 19, 1997 SIP revision request. The amendments revise Chapter 121—Definitions and Chapter 123—NO_X Allowance Requirements. In Chapter 121—Definitions, the term ''NO_X affected source'' was modified to clarify that only individual emission units of 15 MWe or greater are included in the definition. In addition, the definition of ''NO_X affected source'' was further clarified to exclude emergency electrical generating units used to power safety equipment at nuclear power plants. In Chapter 123—NO_X Allowance Requirements, Section 123.115—Initial NO_X Allowance NO_X Allocations was modified to remove the Washington Power Company allocation. Appendix A to Chapter 123 was renamed to Appendix E, and was modified in four ways. First, the NO_X affected sources identified through the process described in Section 123.117—New NO_X Affected Source Provisions were added to Appendix E. Second, the accounting error that resulted in over-allocating the 1999 budget was corrected with a pro rata reduction in all NO_X affected sources emissions. Third, several sources mistakenly included in the previous Appendix A were deleted. Finally, the last column of the previous Appendix A was deleted and the ''Baseline NO_X lb/MMBtu'' column was renamed to add the term ''Bonus Allowances''.

EPA is publishing this rule without prior proposal because the Agency views this as a noncontroversial amendment and anticipates no adverse comment. However, in the ''Proposed Rules'' section of today's **Federal Register**, EPA is publishing a separate document that will serve as the proposal to approve Pennsylvania's NO_X Allowance Requirements if adverse comments are filed. This rule will be effective on August 7, 2000 without further notice unless EPA receives adverse comment by July 6, 2000. If EPA receives adverse comment, EPA will publish a timely withdrawal in the **Federal Register** informing the public that the rule will not take effect. EPA will address all public comments in a subsequent final rule based on the proposed rule. EPA will not institute a second comment period on this action. Any parties interested in commenting must do so at this time.

II. Final Action

EPA is approving revisions to the Pennsylvania SIP consisting of Chapter 121—Definitions and Chapter 123—NO_X Allowance Requirements, submitted on December 19, 1997 and amended on December 27, 1999. These revisions implement Pennsylvania's portion of Phase II of the OTC's MOU to reduce nitrogen oxides.

III. Administrative Requirements

A. General Requirements

Under Executive Order 12866 (58 FR 51735, October 4, 1993), this action is not a ''significant regulatory action'' and therefore is not subject to review by the Office of Management and Budget. This action merely approves state law as meeting federal requirements and imposes no additional requirements beyond those imposed by state law. Accordingly, the Administrator certifies that this rule will not have a significant economic impact on a substantial number of small entities under the Regulatory Flexibility Act (5 U.S.C. 601 *et seq.*). Because this rule approves pre-existing requirements under state law and does not impose any additional enforceable duty beyond that required by state law, it does not contain any unfunded mandate or significantly or uniquely affect small governments, as described in the Unfunded Mandates

Reform Act of 1995 (Pub. L. 104–4). For the same reason, this rule also does not significantly or uniquely affect the communities of tribal governments, as specified by Executive Order 13084 (63 FR 27655, May 10, 1998). This rule will not have substantial direct effects on the States, on the relationship between the national government and the States, or on the distribution of power and responsibilities among the various levels of government, as specified in Executive Order 13132 (64 FR 43255, August 10, 1999), because it merely approves a state rule implementing a federal standard, and does not alter the relationship or the distribution of power and responsibilities established in the Clean Air Act. This rule also is not subject to Executive Order 13045 (62 FR 19885, April 23, 1997), because it is not economically significant. In reviewing SIP submissions, EPA's role is to approve state choices, provided that they meet the criteria of the Clean Air Act. In this context, in the absence of a prior existing requirement for the State to use voluntary consensus standards (VCS), EPA has no authority to disapprove a SIP submission for failure to use VCS. It would thus be inconsistent with applicable law for EPA, when it reviews a SIP submission, to use VCS in place of a SIP submission that otherwise satisfies the provisions of the Clean Air Act. Thus, the requirements of section 12(d) of the National Technology Transfer and Advancement Act of 1995 (15 U.S.C. 272 note) do not apply. As required by section 3 of Executive Order 12988 (61 FR 4729, February 7, 1996), in issuing this rule, EPA has taken the necessary steps to eliminate drafting errors and ambiguity, minimize potential litigation, and provide a clear legal standard for affected conduct. EPA has complied with Executive Order 12630 (53 FR 8859, March 15, 1988) by examining the taking implications of the rule in accordance with the ''Attorney General's Supplemental Guidelines for the Evaluation of Risk and Avoidance of Unanticipated Taking'' issued under the executive order. This rule does noYt impose an information collection burden under the provisions of the Paperwork Reduction Act of 1995 (44 U.S.C. 3501 *et seq.*).

B. Submission to Congress and the Comptroller General

The Congressional Review Act, 5 U.S.C. 801 *et seq.*, as added by the Small Business Regulatory Enforcement Fairness Act of 1996, generally provides that before a rule may take effect, the agency promulgating the rule must submit a rule report, which includes a copy of the rule, to each House of the Congress and to the Comptroller General of the United States. EPA will submit a report containing this rule and other required information to the U.S. Senate, the U.S. House of Representatives, and the Comptroller General of the United States prior to publication of the rule in the **Federal Register**. This rule is not a ''major rule'' as defined by 5 U.S.C. 804(2).

C. Petitions for Judicial Review

Under section 307(b)(1) of the Clean Air Act, petitions for judicial review of this action must be filed in the United States Court of Appeals for the appropriate circuit by August 7, 2000. Filing a petition for reconsideration by the Administrator of this final rule does not affect the finality of this rule for the purposes of judicial review nor does it extend the time within which a petition for judicial review may be filed, and shall not postpone the effectiveness of such rule or action. This action to approve Pennsylvania's NO_X Allowance Requirements may not be challenged later in proceedings to enforce its requirements. (See section 307(b)(2).)

List of Subjects in 40 CFR Part 52

Environmental protection, Air pollution control, Incorporation by reference, Intergovernmental relations, Nitrogen dioxide, Ozone, Reporting and recordkeeping requirements.

Dated: April 24, 2000.

Bradley M. Campbell,

Regional Administrator, Region III.

40 CFR part 52 is amended as follows:

PART 52—[AMENDED]

1. The authority citation for part 52 continues to read as follows:

Authority: 42 U.S.C. 7401 *et seq.*

Subpart NN—Pennsylvania

2. Section 52.2020 is amended by adding paragraph (c)(145) to read as follows:

§ 52.2020 Identification of plan.

* * * * *

(c) * * *

(145) Revisions to the Pennsylvania State Implementation Plan adopting the Nitrogen Oxides Allowance Requirements submitted on December 19, 1997 and December 27, 1999 by the Secretary of the Pennsylvania Department of Environmental Protection:

(i) Incorporation by reference.

(A) Letter of December 19, 1997 from the Secretary of the Pennsylvania Department of the Environmental Protection transmitting the Nitrogen Oxides Allowance Requirements.

(B) Letter of December 27, 1999 from the Secretary of the Pennsylvania Department of the Environmental Protection transmitting the Nitrogen Oxides Allowance Requirements.

(C) Revisions to 25 PA Code, Chapters 121 and 123 pertaining to Nitrogen Oxides Allowance Requirements, effective November 1, 1997.

(*1*) Revisions to section 121.1—definitions of: account, account number, acquiring account, compliance account, electric generating facility, fossil fuel, fossil fuel fired, general account, heat input, indirect heat exchange combustion unit, maximum heat input capacity, NATS–NO_X allowance tracking system, NETS–NO_X emissions tracking system, NO_X allocation, NO_X allowance, NO_X allowance CEMS–NO_X allowance continuous emission monitoring system, NO_X allowance control period, NO_X allowance curtailment, NO_X allowance deduction, NO_X allowance transfer, NO_X allowance transfer deadline, NO_X budget, NO_X budget administrator, OTC MOU-ozone transport commission memorandum of understanding, replacement source.

(*2*) Addition of sections 123.101 through 123.120, except for section 123.115.

(D) Revisions to 25 PA Code, Chapters 121 and 123 pertaining to Nitrogen Oxides Allowance Requirements, effective March 11, 2000.

(*1*) Revisions to section 121.1—definition of NO_X affected source.

(*2*) Addition of section 123.115 and Appendix E.

(ii) Additional material.

(A) Nitrogen Oxide (NO_X) Memorandum of Understanding Implementation Plan of December 9, 1997.

(B) Letter of March 31, 2000 from the Director of the Pennsylvania Department of the Environmental Protection amending the Chapter 123 NO_X Allowance Program.

[FR Doc. 00–13769 Filed 6–5–00; 8:45 am]

BILLING CODE 6560–50–P

FEDERAL COMMUNICATIONS COMMISSION

47 CFR Part 24

[GEN Docket No. 90–314, ET Docket No. 92–100, PP Docket No. 93–253; FCC 00–159]

Narrowband Personal Communications Services; Competitive Bidding

AGENCY: Federal Communications Commission.

ACTION: Final rule.

SUMMARY: This document adopts a number of modifications to the Commission's existing narrowband Personal Communications Services (PCS) rules. These include the use of Major Trading Areas for future licensing, the establishment of a ''substantial service'' alternative to the current construction benchmarks, and modifications to certain provisions of the narrowband PCS competitive bidding rules. The Commission also eliminates the narrowband PCS spectrum aggregation limit and adopts partitioning and disaggregation rules. The Commission believes that the rule modifications it adopts will improve the efficiency of spectrum use, reduce the regulatory burden on spectrum users, encourage competition, and promote service to the largest feasible number of users.

DATES: Effective August 7, 2000, except for § 24.104, which contains information collection requirement that has not been approved by the Office of Management and Budget. The FCC will publish a document in the **Federal Register** announcing the effective date for this section. Public and agency comments on the information collection are due on or before July 6, 2000.

FOR FURTHER INFORMATION CONTACT: Alice Elder, Auctions and Industry Analysis Division, Wireless Telecommunications Bureau, at (202) 418–0660.

SUPPLEMENTARY INFORMATION: This is a summary of a Second Report and Order (*Second R&O*) in the Commission's narrowband PCS proceeding adopted May 5, 2000, and released May 18, 2000. The complete text of this *Second R&O* is available for inspection and copying during normal business hours in the FCC Reference Center (Room CY–A257), 445 12th Street, SW, Washington, DC. It may also be purchased from the Commission's copy contractor, International Transcription Services, Inc. (ITS, Inc.), 1231 20th Street, NW, Washington, DC 20036, (202) 857–3800. It is also available on the Commission's web site at http://www.fcc.gov/wtb/auctions.

Synopsis of the Second Report and Order

1. The Commission adopts a Second Report and Order (*Second R&O*) in its narrowband PCS proceeding, amending certain rules governing this service. The Commission provided for the operation of narrowband PCS in the 900 MHz band, adopting a spectrum allocation and channelization plan, licensing rules, and technical standards for the service, in 1993. *See* Amendment of the Commission's Rules to Establish New Narrowband Personal Communications Services, First Report and Order, 58 FR 42681 (August 11, 1993). *See also* Amendment of the Commission's Rules to Establish New Narrowband Personal Communications Services, Memorandum Opinion and Order, 59 FR 14115 (March 25 1994). In Implementation of Section 309(j) of the Communications Act—Competitive Bidding, Second Report and Order, 59 FR 22980 (May 4, 1994), the Commission determined that, pursuant to section 309(j) of the Communications Act of 1934, as amended, PCS is subject to competitive bidding in the case of mutually exclusive applications, and the Commission adopted general competitive bidding rules for auctionable services. In Implementation of Section 309(j) of the Communications Act—Competitive Bidding, Third Report and Order, 59 FR 26741 (May 24, 1994), the Commission established competitive bidding rules specifically for narrowband PCS. Currently, of the three megahertz of 900 MHz spectrum allocated for narrowband PCS, two one-megahertz blocks have been divided into specific channels for licensing. The remaining one megahertz of narrowband PCS spectrum has been reserved to accommodate future development of narrowband PCS. Thus far, nationwide and regional licenses have been awarded through two auctions, which were held in 1994.

2. This *Second R&O* resolves issues raised in Amendment of the Commission's Rules to Establish New Personal Communications Services, Narrowband PCS, Report and Order and Further Notice of Proposed Rulemaking (*Narrowband PCS R&O/Further Notice*), 62 FR 27507 (May 20, 1997). In response to the *Narrowband PCS R&O/Further Notice*, the Commission received 15 comments and 16 reply comments.

3. *Service Area Reallocation.* In this *Second R&O,* the Commission amends its current allocation of narrowband PCS spectrum to eliminate Basic Trading Areas (BTAs) and license the remaining spectrum, including the response channels, based on Major Trading Areas (MTAs). The Commission finds that MTAs are the most appropriate geographic area for licensing the remaining narrowband PCS spectrum because they will serve the needs of a wide range of entities, including both large and small service providers. The Commission does not believe that using MTAs will compromise the goal of ensuring entry for small businesses or undermine the confidence of either incumbent and potential licensees or the investment community.

4. Finally, the Commission notes that the use of MTAs will avoid any potential problems that might arise from inconsistencies between the boundaries of Major Economic Areas (MEAs) and existing regional licenses based on MTAs. Moreover, Rand McNally & Company, which owns the copyright to MTAs, has granted a blanket license to parties with an interest in this proceeding to use MTAs, and there is therefore no impediment to their use for narrowband PCS.

5. *Spectrum Aggregation Limit.* In this *Second R&O,* the Commission eliminates the narrowband PCS spectrum aggregation limit. Adopted in 1993, this rule provided that a single licensee was permitted to hold licenses for no more than three channels, either paired or unpaired, in any geographic area. The limit was adopted to ensure that narrowband PCS services would be offered on a competitive basis.

6. The Commission recently has concluded that the paging/messaging industry is highly competitive. Moreover, narrowband PCS licensees increasingly compete with other sectors of the wireless industry, including broadband PCS and Specialized Mobile Radio (SMR) that offer the same or similar services. Thus, the Commission finds that the aggregation limit is not needed to prevent an undue concentration of licenses, either through the auctioning of additional narrowband PCS spectrum or post-auction mergers. Moreover, in order to compete with other providers of paging and messaging services, narrowband PCS licensees may need to consolidate and should not be prevented from doing so by the narrowband PCS spectrum aggregation limit.

7. Further, the Commission does not believe that large companies will attempt to acquire licenses merely to foreclose entry by smaller entities, because it is clear that such a strategy would not be successful in limiting competition. Acquiring spectrum for

purposes of withholding its use would be very expensive. In addition, such efforts would be difficult, given the large number of licensees already competing in this market and the fact that narrowband PCS licensees face competition from other wireless sectors. Although the Commission has found that a Commercial Mobile Radio Services (CMRS) spectrum cap is necessary to ensure that the mobile voice market is competitive, the risk of excessive concentration through mergers is far lower in the paging/messaging context. Paging carriers face growing competition from short messaging services and other digital service features offered by an increasing number of mobile voice carriers. In addition, the recent auction of spectrum in the 929 and 931 MHz bands should facilitate further entry or capacity expansion. The Commission notes that it retains the ability to evaluate individual transfer and assignment applications on a case-by-case basis through its review of such applications.

8. *Eligibility for Response Channels.* In order to provide an opportunity for incumbent paging licensees to upgrade their operations, the Commission set aside 100 kilohertz (eight unpaired frequencies) of the three megahertz allocated for narrowband PCS as paging response channels, *i.e.*, channels to be used in paired communications with existing one-way paging frequencies to provide mobile-to-base station communications. The Commission's intent in establishing these channels was to provide a means for one-way (single frequency) paging licensees to obtain a second frequency for the purpose of delivering signals back from their customers' mobile devices.

9. In this *Second R&O,* the Commission lifts all eligibility restrictions on applying for paging response channels, finding that such restrictions unnecessarily exclude potential users of the response channels that are not paging licensees, *e.g.,* narrowband PCS licensees. Thus, eligibility for acquiring narrowband PCS response channels will no longer be limited to existing paging licensees, *i.e.,* those licensed to operate conventional one-way paging base stations under part 22 or part 90 of the Commission's rules as of the application filing deadline for the paging response channels. The Commission finds that lifting the eligibility restrictions will encourage entry of new narrowband PCS providers by providing greater flexibility to new licensees to use these channels in conjunction with other spectrum to provide new services. In keeping with its decision to abolish the limit on aggregation of narrowband PCS spectrum, as well as its decision to eliminate eligibility restrictions for paging response channels, the Commission also concludes that there should be no limit on the number of response channels a licensee may hold.

10. The Commission will retain the current rule restricting use of the response channels to mobile-to-base transmissions. Several commenters argue that allowing these channels to be used for other purposes would cause harmful interference with current narrowband PCS licensees. The Commission agrees with these commenters and will retain the current rule restricting use of the response channels to mobile-to-base transmissions.

11. *Construction and Coverage Requirements for Narrowband PCS Licensees.* The Commission will maintain its current coverage requirements for narrowband PCS and adopts a substantial service requirement as an alternative. The Commission finds that coverage requirements, including a substantial service standard, encourage the provision of service to areas that would not necessarily receive service expeditiously solely through the operation of market forces. The Commission recognizes that narrowband PCS is a developing service and that there has been a delay in equipment availability. It therefore believes that it would not be appropriate at this time to establish three- and five-year benchmarks for this service, as it has done for the paging services, in lieu of the current benchmarks. The Commission also believes, however, that its five- and ten-year construction benchmarks provide sufficient time for narrowband PCS licensees to construct their systems and that there is no need to alter the current benchmarks. Any problems that individual licensees may have because of difficulties with financing or equipment availability may be addressed by evaluating requests for waiver on a case-by-case basis.

12. The Commission further finds that a substantial service option may be very useful in allowing licensees to use spectrum flexibly to provide new and innovative services uninhibited by a requirement that they meet a specific coverage benchmark or lose their license. In addition, rural areas may be more difficult to serve than urban areas. Permitting licensees to make a substantial service showing may encourage them to build out in rural areas because it would give them the option of satisfying the Commission's construction requirements by serving rural areas without necessarily having to meet either population or composite area benchmarks. The Commission finds that these advantages outweigh any concerns commenters have regarding potential speculation or anticompetitive conduct.

13. In the past the Commission has offered guidance to licensees in other services with regard to factors that it would consider in evaluating whether the substantial service requirement has been met. The Commission will apply these same factors to evaluations of substantial service showings made by narrowband PCS licensees. Thus, the Commission may consider such factors as whether the licensee is offering a specialized or technologically sophisticated service that does not require a high level of coverage to be of benefit to customers, and whether the licensee's operations serve niche markets. A licensee may also demonstrate that it is providing service to unserved or underserved areas without covering a specific composite area or percentage of the population. Because the substantial service requirement can be met in a variety of ways, the Wireless Telecommunications Bureau (Bureau) will review licensees' showings on a case-by-case basis.

14. Just as it believes that the addition of a substantial service alternative to its rules will be helpful to entities seeking to provide innovative services, the Commission also recognizes that there may be instances in which a flexible approach to its narrowband PCS operational or technical rules would be helpful to such entities and would promote the development of new services. Although the Commission has crafted these rules to generally provide for a wide range of technologies and business plans, there may be instances where particular circumstances render the rules unreasonable or overly burdensome, to the extent the public interest would be harmed by their strict application. The Commission therefore will give expedited treatment to requests for waivers of these operational and technical rules, and, to the extent it finds that such waivers will not harm other licensees and will be in the public interest, it will consider them favorably.

15. *Construction and Coverage Requirements for Nationwide Paging Licensees.* In Revision of Part 22 and Part 90 of the Commission's Rules to Facilitate Future Development of Paging Systems, Memorandum Opinion and Order on Reconsideration and Third Report and Order (*Paging MO&O/Third Report and Order*), 64 FR 33762 (June 24, 1999), the Commission considered the issue of coverage requirements for nationwide geographic area paging

licensees and deferred any decision on the issue until it resolved similar matters in the instant narrowband PCS rulemaking proceeding. In this *Second R&O,* the Commission declines to adopt coverage requirements for nationwide paging licensees that would be in addition to the build-out requirements they have already met.

16. Nationwide paging licensees have already met pre-existing build-out rules, which were imposed in connection with nationwide exclusivity rules prior to the advent of geographic area licensing. Having carefully examined its databases reflecting the extent of construction by nationwide paging licensees, the Commission finds that all of these licensees are already providing sufficient coverage to meet the five-year benchmark applicable to nationwide narrowband PCS licensees, and some of them have met the ten-year benchmark. Thus, while the Commission expects nationwide paging licensees to build out their systems to the same extent as nationwide narrowband PCS licensees, it concludes that the build-out requirements set forth in its previous rules were adequate to promote coverage by nationwide paging licensees that is equivalent to that of nationwide narrowband PCS licensees, which have recently reached their five-year benchmark. In addition, while the Commission anticipates that nationwide paging licensees' build-out in rural areas should increase in the future given that licensees appear to have already constructed in most urban areas, it has no evidence that nationwide paging licensees' build-out in rural areas is deficient. The Commission therefore concludes that it is unnecessary to impose a new layer of regulations on nationwide paging licensees by adopting additional coverage requirements for them. However, if the Commission is presented with evidence that there is a need to impose a requirement equivalent to the ten-year nationwide narrowband PCS benchmark, it will consider revisiting this issue in the future.

17. *Applicability of the Part 1 General Competitive Bidding Rules.* Following the release of the *Narrowband PCS R&O/Further Notice* in April 1997, the Commission adopted an order establishing uniform competitive bidding provisions for all auctionable services. See Amendment of Part 1 of the Commission's Rules—Competitive Bidding Procedures, Third Report and Order and Second Further Notice of Proposed Rule Making (*Part 1 Third Report and Order*), 63 FR 770 (January 7, 1998). Thus, the general competitive bidding rules found in subpart Q of part 1 of the Commission's rules, including provisions adopted in the *Part 1 Third Report and Order,* will serve as the general competitive bidding rules for all future auctions, regardless of whether service-specific rules have previously been adopted. Subpart Q of part 1 of the Commission's rules will apply to narrowband PCS, unless the Commission determines that, with regard to particular matters, the adoption of service-specific rules is warranted. The Balanced Budget Act of 1997 provides that, before the issuance of bidding rules, the Commission must provide adequate time for parties to comment on proposed auction procedures. In response to this statutory requirement, the Commission has directed the Bureau, under its existing delegated authority, to seek comment prior to the commencement of each auction on a variety of auction-specific operational issues. *See Part 1 Third Report and Order* (citing Balanced Budget Act of 1997, section 3002(a)(1)(B)(iv)). Under part 1 and consistent with this approach, matters such as auction design, license grouping, activity rules, minimum opening bids, and reserve prices will be determined by the Bureau pursuant to its delegated authority.

18. The Commission declines to adopt the suggestion that it require applicants to identify each frequency in each market on which they wish to bid and submit upfront payments for each individual license. The Commission believes that its current rules, which require an upfront payment to cover only those licenses on which an applicant intends to bid in any one round, are appropriate because they allow bidders the flexibility to pursue backup strategies during the course of an auction in the event they are unable to obtain their first choice of licenses. Such flexibility is crucial to an efficient auction and optimal license assignment. The Commission also declines to modify its anti-collusion rule to provide a safe harbor for carriers engaged in negotiations regarding mergers or intercarrier agreements. It has declined to create such a safe harbor in the past, and it has not been presented with an adequate justification for departing from that decision with respect to narrowband PCS. Finally, certain commenters urge the Commission to provide auction participants with the identity of all competing bidders. It has generally been the Commission's practice to disclose the identity of all bidders in Commission auctions. If, however, in the case of particular auctions a limit on such information appears warranted, the Bureau will, consistent with the Balanced Budget Act of 1997 and current practice, seek comment on the issue in a public notice prior to the auction.

19. *Treatment of Designated Entities.* The term ''designated entity'' refers to small businesses, rural telephone companies, and businesses own by minorities and/or women. In this *Second R&O,* the Commission declines to offer race- and gender-based designated entity provisions for narrowband PCS at this time. Commenters in this proceeding have submitted no evidence or data on the issue of race- or gender-based auction provisions, and the Commission concludes that it does not have a sufficient record to support such special provisions at this time under current standards of judicial review. *See Adarand Constructors, Inc.* v. *Pena,* 515 U.S. 200 (1995) (requiring a strict scrutiny standard of review for Congressionally mandated race-conscious measures) and *United States* v. *Virginia,* 518 U.S. 515 (1996) (applying an intermediate scrutiny standard of review to a state program containing gender classification).

20. The Commission remains committed to meeting the statutory objectives of promoting economic opportunity and competition, avoiding excessive concentration of licenses, and ensuring access to new and innovative technologies by disseminating licenses among a wide variety of applicants, including small businesses, rural telephone companies, and businesses owned by members of minority groups and women. It believes the bidding credits it adopts for small businesses will assist in meeting these objectives because many minority- and women-owned entities are small businesses and will therefore qualify for these special provisions. The Commission also believes that its standardization of the rules regarding definitions of eligible entities, unjust enrichment, and bidding credits in the *Part 1 Third Report and Order* will assist small and minority- and women-owned businesses because the resulting predictability will facilitate effective business planning and capital accumulation. The Commission's Office of Communications Business Opportunities has initiated several studies to gather information regarding barriers to entry faced by minority- and women-owned firms that wish to participate, or have participated, in Commission auctions. Further, the Commission has recently commenced several new studies to explore additional entry barriers and to seek further evidence of racial and gender

discrimination against potential licensees. In addition, it will continue to track the rate of participation in its auctions by minority- and women-owned firms and evaluate this information with other data gathered to determine whether provisions to promote participation by minorities and women can satisfy judicial scrutiny. If a sufficient record can be adduced, the Commission may consider race- and gender-based auction provisions in the future.

21. The Commission declines to adopt financial preferences designed specifically for rural telephone companies. The Commission is not persuaded by the argument that it should provide special bidding credits for rural telephone companies in order to meet its obligation to ensure that rural telephone companies have the opportunity to participate in spectrum-based services. The Commission has no evidence that large rural telephone companies encounter barriers to capital formation comparable to those faced by other designated entities. Moreover, the vast majority of rural telephone companies that have participated in the Commission's auctions to date have identified themselves as small businesses and have qualified for bidding credits on that basis. Thus, the Commission finds that small business bidding credits are sufficient to ensure that rural telephone companies have opportunities to participate in spectrum-based services.

22. For purposes of narrowband PCS, the Commission will define a small business as an entity with average annual gross revenues not to exceed $40 million for the preceding three years and a very small business as an entity with average annual gross revenues not to exceed $15 million for the preceding three years. The Commission declines to adopt different definitions and thresholds for different channel blocks.

23. In the *Part 1 Third Report and Order,* the Commission established a standard schedule of bidding credits for small businesses. While these bidding credits are higher than some previously adopted for specific services, the Commission concluded in the *Part 1 Third Report and Order* that, based on its auction experience and the fact that it had decided to suspend the use of installment payments, the schedule adopted would provide adequate opportunities for small businesses to participate in spectrum auctions. The Commission believes that the levels of bidding credits in this schedule, which are higher than those proposed in the *Narrowband PCS R&O/Further Notice,* are sufficient to promote the participation of small businesses in the provision of narrowband PCS. The Commission therefore sees no reason to deviate from them here, and declines to adopt higher levels as recommended by certain commenters. Thus, as provided in § 1.2110(e)(2) of the Commission's rules, small and very small businesses will be eligible for bidding credits as follows: Small businesses, *i.e.,* those entities with average annual gross revenues for the preceding three years not exceeding $40 million, will receive a 15 percent bidding credit. Very small businesses, *i.e.,* those entities with average annual gross revenues for the preceding three years not exceeding $15 million, will receive a 25 percent bidding credit. These bidding credits will be available on all channels for which licenses are auctioned. Thus, bidding credits will not be restricted to certain channels.

24. The Commission will attribute the gross revenues of the applicant, the applicant's controlling interests, and its affiliates in making determinations regarding small business status. This approach is consistent with the standard proposed in Amendment of Part 1 of the Commission's Rules—Competitive Bidding Procedures, Memorandum Opinion and Order and Notice of Proposed Rule Making, 62 FR 13540 (March 21, 1997), wherein the Commission proposed a ''controlling interest'' standard as the general attribution rule for all future auctions. Under this standard, eligibility for small business provisions will be determined by attributing the gross revenues of the applicant, its controlling interests, which are defined to include those that exercise either *de jure* or *de facto* control, and its affiliates. Typically, *de jure* control is evidenced by holdings of greater than 50 percent of the voting stock of a corporation or, in the case of a partnership, general partnership interests. *De facto* control is determined on a case-by-case basis, and includes the criteria set forth in a Notice of Hearing Designation Order (*Ellis Thompson Corp.*), 60 FR 1776 (January 5, 1995).

25. The ''controlling interest'' definition also provides specific guidance on calculation of various types of ownership interests. For purposes of calculating equity held in an applicant, the definition provides for full dilution of certain stock interests, warrants, and convertible debentures. In addition, the definition provides for attribution of partnership and other ownership interests, including stock interests held in trust, non-voting stock, and indirect ownership through intervening corporations. When an applicant cannot identify controlling interests under the definition, the revenues of all interest holders in the applicant and their affiliates will be counted. For example, if a company is owned by four entities, each of which has 25 percent voting equity and no shareholders' agreement or voting trust gives any one of them control of the company, the revenues of all four entities and their affiliates must be counted. Treating such a corporation in this way is similar to the Commission's treatment of a general partnership—all general partners are considered to have a controlling interest. This rule looks to substance over form in assessing eligibility for small business status.

26. The Commission's intent is to provide flexibility that will enable legitimate small businesses to attract passive financing in a highly competitive and evolving telecommunications marketplace. At the same time, the Commission believes that this controlling interest threshold will function effectively to ensure that only those entities truly meriting small business status are eligible for small business provisions. In particular, the Commission believes that the *de jure* and *de facto* concepts of control used to determine controlling interests in an applicant and the application of its affiliation rules will effectively prevent larger firms from illegitimately seeking status as a small business. The Commission also finds that the controlling interest standard it adopts, along with the definition of ''affiliate'' set forth in part 1 of its rules (*see* 47 CFR 1.2110(b)(4)), adequately addresses commenters' concerns regarding new business structures and widely held companies.

27. The Commission continues to believe that the obstacles faced by small businesses, including women- and minority-owned small businesses, in raising capital are not necessarily confined to small business principals and affiliates with limited personal net worth. Moreover, personal net worth limits are difficult to apply and enforce. The Commission therefore eliminates the $40 million individual net worth limitation in its narrowband PCS rules.

28. With respect to payment matters, the Commission declines to adopt installment payment plans for small businesses participating in narrowband PCS auctions in the future. The Commission's experience has demonstrated that installment payments may not be necessary to ensure a meaningful opportunity for small businesses to participate successfully in its auction program. The Commission continues to believe that bidding

credits, coupled with its partitioning and disaggregation policies, are sufficient to overcome barriers faced by small businesses seeking to participate in the narrowband PCS marketplace. As a result of the Commission's decision to suspend installment payments, and its adoption of rules governing late payments and defaults in part 1, subpart Q, issues related to installment payments regarding interest, late payment fees, and payment schedules raised in the *Narrowband PCS R&O/ Further Notice* are now moot. Current licensees paying for their licenses in installments are subject to the late payment and default provisions in part 1.

29. The Commission believes that when a small business entity applies to transfer or partition its license or disaggregate spectrum, unjust enrichment rules are necessary in order to ensure that non-small business entities cannot take indirect advantage of the Commission's small business incentives. However, the Commission does not need to establish a separate unjust enrichment requirement for narrowband PCS because it has adopted a uniform requirement in part 1, subpart Q, of its rules for all services. Accordingly, the unjust enrichment provisions set forth at 47 CFR 1.2111 will apply to narrowband PCS. These provisions address assignments and transfers between entities qualifying for different tiers of bidding credits. Because the Commission will now offer bidding credits only to small businesses, its unjust enrichment rules will apply to any case where a licensee that qualified for a bidding credit seeks to transfer or partition to an entity that is not a small business. In addition, the Commission's revised attribution rules will apply in determining small business status. Finally, the Commission declines to adopt a holding period or transfer restrictions for narrowband PCS licenses that would be in addition to its unjust enrichment rules.

30. *Partitioning and Disaggregation.* The Commission will permit all narrowband PCS licensees, including incumbents, to partition their geographic license area at any time to any entity eligible for a narrowband PCS license. Small businesses and others may face certain barriers to entry into the provision of spectrum-based services, which may be addressed by allowing qualifying entities to acquire a partitioned license. The Commission also believes that the partitioning policy it adopts will allow licensees to use spectrum more efficiently, speed service to underserved areas, and stimulate competition.

31. Partitioning will be permitted based on any geographic area defined by the parties to a partitioning arrangement. Partitionees will hold their licenses for the remainder of the partitioner's ten-year license term. This term is appropriate because a licensee, through partitioning, should not be able to confer greater rights than it was awarded under the terms of its license grant.

32. Parties to a partitioning arrangement will have two options for meeting the applicable narrowband PCS construction requirements. Under the first option, the partitionee may certify that it will satisfy the same construction requirements as the original licensee, with the partitionee meeting the requirements in its partitioned area and the partitioner responsible for satisfying the requirements in the area it has retained. Under the second option, the original licensee may certify that it has already met or will meet its five-year construction requirement and that it will meet the 10-year requirement for the entire market involved. All parties should understand that, under the first option, both the partitioner and partitionee are individually responsible for meeting the coverage requirements for their respective areas. Failure by either party to meet its coverage requirements will result in the automatic cancellation of its license without further Commission action. Under the second option, only the partitioner's license will be cancelled if it fails to meet the coverage requirements for the entire geographic area. The partitionee will not be subject to coverage requirements except for those necessary to obtain license renewal.

33. Partitioning applicants will be required to submit, as separate attachments to the partial assignment application, a description of the partitioned service area and a calculation of the population of the partitioned service area. The partitioned service area must be defined using counties, FCC-defined service areas (*e.g.,* Economic Areas), or the boundaries of the area described in terms of latitude and longitude. When partitioning counties or FCC-defined service areas, the applicant need only supply the county and state, or market number. When describing the boundary of an area, however, the applicant must supply sets of coordinates (latitude and longitude referenced to the North American Datum of 1983—NAD83) along the boundary sufficient to describe the area. An applicant may use as few as three sets of coordinates, up to a maximum of 120 sets of coordinates in order to describe an area. Applicants are free to aggregate several areas described by coordinates in order to accurately describe the boundary of the partitioned area.

34. The Commission will also permit all narrowband PCS licensees, including nationwide licensees to disaggregate portions of their spectrum in the same general manner as it has for licensees in other CMRS services where it has adopted disaggregation. The Commission concludes that marketplace forces should determine whether it is technically feasible to disaggregate narrowband spectrum. Allowing narrowband PCS spectrum disaggregation could potentially expedite the introduction of service to underserved areas and provide increased flexibility to licensees. The Commission also believes that disaggregation combined with bidding credits and geographic partitioning will facilitate the acquisition of narrowband PCS spectrum by small businesses.

35. The Commission finds that it is unnecessary to require a party that wishes to disaggregate to retain a minimum amount of spectrum. Thus, the Commission will allow disaggregating parties to negotiate channelization plans among themselves as a part of their disaggregation agreements. Parties will be permitted to disaggregate spectrum in any increments as long as such disaggregation is otherwise consistent with the Commission's rules. Disaggregatees will be authorized to hold licenses for the remainder of the disaggregator's original ten-year term. As the Commission concluded with respect to partitioners, the disaggregator should not be entitled to confer greater rights than it was awarded under the initial license grant.

36. With respect to meeting construction requirements, disaggregating parties will be permitted to choose between two options: Under the first option, the parties may agree that either the disaggregator or the disaggregatee will be responsible for meeting the coverage requirements for the geographic service area. Under the second option, the disaggregator and disaggregatee may certify that they will share the responsibility for meeting the coverage requirements for the entire geographic area. Under the first option, if the certifying party fails to meet the coverage requirements for the entire geographic area, that party's license will be subject to cancellation, but the non-certifying party's license will not be affected. However, if the parties to a disaggregation agreement select the second option and jointly fail to satisfy

the coverage requirements for the entire geographic area, both parties' licenses will be subject to cancellation. Parties seeking Commission approval of a disaggregation agreement will be required to include a certification as to which party or parties will be responsible for meeting the construction requirements.

37. Combined partitioning and disaggregation will be permitted. This will allow narrowband PCS licensees the flexibility to design the types of agreements they desire, and will advance the goals of providing competitive service offerings and encouraging new market entrants. In the event that there is a conflict in the application of the partitioning and disaggregation rules, the partitioning rules will prevail. When a combination of partitioning and disaggregation is proposed, the Commission will use both the population of the partitioned area and the amount of spectrum disaggregated to calculate unjust enrichment payments.

38. The Commission has adopted a general rule that determines the amount of unjust enrichment payments assessed for all current and future licensees that engage in partitioning and disaggregation. Specifically, the rules adopted in the *Part 1 Third Report and Order* indicate that if a licensee seeks to partition any portion of its geographic area, the amount of the unjust enrichment payment will be calculated based on the ratio of the population in the partitioned area to the overall population of the license area. In the event of disaggregation, the amount of the unjust enrichment payment will be based upon the ratio of the amount of spectrum disaggregated to the amount of spectrum held by the disaggregating licensee. *See* 47 CFR 1.2111(e). The unjust enrichment provisions adopted in the *Part 1 Third Report and Order* will apply to any narrowband PCS licensee that receives a bidding credit and later elects to partition or disaggregate its license. When combined partitioning and disaggregation is proposed, the Commission will use a combination of both population of the partitioned area and amount of spectrum disaggregated to make these pro rata calculations.

39. Installment payments have been suspended as a means of financing small businesses and other designated entities seeking to secure spectrum licenses. Nonetheless, there are a small number of current narrowband licensees that qualified as small businesses for installment payment plans. If such a licensee sought to partition or disaggregate its license to another small business, the partitionee or disaggregatee would be permitted to pay its portion of the remaining obligation on the license in installments. If, however, such a licensee sought to partition or disaggregate its license to a non-small business, the Commission's part 1 unjust enrichment rules would apply.

40. Because the Commission has suspended its installment payment program, the issue of default obligations for parties entering into partitioning and disaggregation agreements is moot with respect to future licensees. With respect to current small business licensees that may partition or disaggregate to other small businesses, the Commission concludes that a default on one party's payment obligation should not affect the other party's license.

41. *Ownership Disclosure Requirements.* The Commission believes that requiring detailed ownership information is necessary to ensure that all applicants claiming small business status qualify for such status. Disclosure of ownership information also aids bidders by providing them with information about their auction competitors and alerting them to entities subject to the Commission's anti-collusion rules. The Commission has adopted uniform ownership disclosure requirements in part 1, subpart Q, of its rules for all services. *See* 47 CFR 1.2112. These rules require all auction applicants to disclose the real party or parties in interest by including as an exhibit to their short-form applications detailed ownership information. Moreover, they require that applicants list controlling interests as well as all parties holding a 10 percent or greater interest in the applicant and any affiliates of these interest holders. These rules, combined with the controlling interest standard the Commission adopts in this *Second R&O* and its definition of ''affiliate,'' will help to ensure that only qualifying applicants obtain the benefits of the Commission's small business provisions, without being unduly burdensome.

42. *Construction Prior to Grant of Licenses for Narrowband and Broadband PCS.* The Commission will apply its part 1 rules, which permit applicants for all licenses awarded by competitive bidding to begin construction of facilities prior to the grant of their applications. *Sees* 47 CFR 1.2113. The Commission believes that allowing pre-grant construction furthers the statutory objective of rapidly deploying new technologies, products, and services for the benefit of the public. Pre-grant construction will be subject to any narrowband PCS service restrictions, including but not limited to antenna restrictions, environmental requirements, and international coordination. Any applicant engaging in pre-grant construction does so entirely at its own risk, and the Commission will not take such activity into account in ruling on any petition to deny.

Procedural Matters

A. Regulatory Flexibility Analysis

43. A Final Regulatory Flexibility Analysis, pursuant to the Regulatory Flexibility Act, 5 U.S.C. 604, is incorporated in this document.

B. Paperwork Reduction Act Analysis

44. This *Second R&O* contains a modified information collection. As part of its continuing effort to reduce paperwork burdens, the Commission invites the general public and the Office of Management and Budget (OMB) to take this opportunity to comment on the information collection contained in this *Second R&O,* as required by the Paperwork Reduction Act of 1995, Public Law 104–13. Public and agency comments are due on or before July 6, 2000. Written comments must be submitted by OMB on the modified information collection on or before August 7, 2000. Comments should address: (a) Whether the proposed collection of information is necessary for the proper performance of the functions of the Commission, including whether the information shall have practical utility; (b) the accuracy of the Commission's burden estimates; (c) ways to enhance the quality, utility, and clarity of the information collected; and (d) ways to minimize the burden of the collection of information on the respondents, including the use of automated collection techniques or other forms of information technology.

OMB Control Number: 3060–0625.

Title: Amendment of the Commission's Rules to Establish New Personal Communications Services, Narrowband PCS.

Form Number: N/A.

Type of Review: Revision of existing collection.

Respondents: Business or other for-profit; Individuals or households; Not-for-profit institutions; Federal Government; and State, Local or Tribal Government.

Number of Respondents: 1,500.

Estimate Time Per Response: 3.5 hrs. (avg.).

Frequency of Response: On occasion.

Total Annual Burden: 5,250 hours.

Total Annual Costs: $1,050,000.

Needs and Uses: The amendments to the Commission's narrowband Personal

Communications Services rules adopted in this proceeding will improve the efficiency of spectrum use, reduce the regulatory burden on spectrum users, encourage competition, and promote service to the largest feasible number of users.

45. In addition to filing comments with the Secretary, a copy of any comments on the information collection(s) contained herein should be submitted to Judy Boley, Federal Communications Commission, Room 1–C804, 445 12th Street, SW., Washington, DC 20554, or via the Internet to *jboley@fcc.gov* and to Edward Springer, OMB Desk Officer, 10236 NEOB, 725 17th Street, NW., Washington, DC 20503 or via the Internet to *edward.springer@omb.eop.gov.*

E. Ordering Clauses

46. Authority for issuance of this *Second R&O* is contained in sections 4(i), 257, 303(r), and 309(j) of the Communications Act of 1934, as amended, 47 U.S.C. 154(i), 257, 303(r), and 309(j).

47. Accordingly, it is ordered that part 24 of the Commission's rules is amended as specified, effective August 7, 2000, except § 24.104, which shall be effective upon OMB approval.

48. It is further ordered that the Commission's Consumer Information Bureau, Reference Information Center, shall send a copy of this *Second R&O,* including the Final Regulatory Flexibility Analysis, to the Chief Counsel for Advocacy of the Small Business Administration.

Final Regulatory Flexibility Analysis

49. As required by the Regulatory Flexibility Act (RFA), an Initial Regulatory Flexibility Analysis (IRFA) was incorporated in the *Narrowband PCS R&O/Further Notice* in this proceeding. The Commission sought written public comment on the proposals in the *Narrowband PCS R&O/Further Notice,* including comment on the IRFA. No commenter raised an issue concerning the IRFA. The Commission's Final Regulatory Flexibility Analysis (FRFA) in this *Second R&O* conforms to the RFA.

i. Need for and Purpose of this Action

50. This *Second R&O* amends the Commission's rules for narrowband PCS. The amendments adopted promote efficient licensing of narrowband PCS and enhance the service's competitive potential in the Commercial Mobile Radio Service marketplace. The *Second R&O* also makes the competitive bidding rules for narrowband PCS, which previously provided preferences for minority- and women-owned businesses, race- and gender-neutral. The Commission deems the latter changes necessary in light of the Supreme Court's decisions in *Adarand Constructors, Inc.* v. *Pena,* 515 U.S. 200 (1995) (requiring a strict scrutiny standard of review for Congressionally mandated race-conscious measures) and *United States* v. *Virginia,* 518 U.S. 515 (1996) (applying an intermediate scrutiny standard of review to a state program containing gender classification). By applying the Commission's standardized part 1 competitive bidding rules to narrowband PCS and eliminating most of the service-specific competitive bidding rules previously applied, the *Second R&O* also simplifies and reduces the regulatory burden on applicants and licensees.

ii. Summary of Issues Raised by the Public in Response to the IRFA

51. No party filed comments responding to the IRFA. The Commission has, however, taken small business concerns into account in the *Second R&O*, as discussed in Sections v and vi of this FRFA.

iii. Description and Estimate of the Number of Small Entities to Which the Rules Will Apply

52. The rules adopted in the *Second R&O* will affect small businesses that hold or seek to acquire narrowband PCS licenses. These entities include small businesses that obtain nationwide, regional or MTA geographic area licenses through auction, assignment, or transfer and small businesses that acquire partitioned and/or disaggregated MTA, regional, or nationwide geographic area licenses.

53. To date, two auctions of narrowband PCS licenses have been conducted. Through these auctions, the Commission has awarded a total of 41 licenses, out of which 11 were obtained by small businesses. For purposes of the two auctions that have already been held, small businesses were defined as entities with average gross revenues for the prior three calendar years of $40 million or less. To ensure meaningful participation of small business entities in the auctions, the Commission adopts a two-tiered definition of small businesses in the *Second R&O.* A small business is an entity that, together with affiliates and controlling interests, has average gross revenues for the three preceding years of not more than $40 million. A very small business is an entity that, together with affiliates and controlling interests, has average gross revenues for the three preceding years of not more than $15 million. In December 1998, the Small Business Administration approved this two-tiered definition, which had been proposed in the *Narrowband PCS R&O/Further Notice*. Letter of December 2, 1998, to Amy J. Zoslov, Chief, Auctions and Industry Analysis Division, Wireless Telecommunications Bureau, from Aida Alvarez, Administrator Small Business Administration.

54. Without this definition, the Commission would utilize the SBA definition applicable to radiotelephone companies, *i.e.*, an entity employing fewer than 1,500 persons. *See* 13 CFR 121.201, Standard Industrial Classification Code 4812. Nearly all radiotelephone companies have fewer than 1,000 employees. The 1992 Census of Transportation, Communications, and Utilities, conducted by the Bureau of the Census, shows that only 12 radiotelephone firms out of a total of 1,178 such firms that operated during 1992 had 1,000 or more employees. U.S. Bureau of the Census, U.S. Department of Commerce, 1992 Census of Transportation, Communications, and Utilities, UC92–S–1, Subject Series, Establishment and Firm Size, Table 5, Employment Size of Firms: 1992, SIC Code 4812 (issued May 1995).

55. In the future, the Commission will auction 459 licenses to serve MTAs and 408 response channel licenses. There is also one megahertz of narrowband PCS spectrum that has been held in reserve and that the Commission has not yet decided to release for licensing. The Commission cannot predict accurately the number of licenses that will be awarded to small entities in future auctions. However, 4 of the 16 winning bidders in the two previous narrowband PCS auctions were small businesses, as that term was defined under the Commission's rules. The Commission assumes, for purposes of the evaluations and conclusions in this FRFA, that a large portion of the remaining narrowband PCS licenses will be awarded to small entities. The Commission also assumes that at least some small businesses will acquire narrowband PCS licenses by means of the Commission's partitioning and disaggregation rules.

iv. Summary of Projected Reporting, Recordkeeping, and Other Compliance Requirements

56. The rules adopted in the *Second R&O* impose reporting and recordkeeping requirements on small businesses, as well as others, seeking to obtain or transfer licenses through partitioning and disaggregation. The information requirements will be used

to determine whether the proposed partitionee or disaggregatee is an entity qualified to obtain a partitioned license or disaggregated spectrum. The information will be a one-time filing by an applicant requesting such a license. The information can be submitted on FCC Form 603 for part 24 narrowband PCS services. The Commission estimates that the average burden on the applicant is three hours for the information necessary to complete these forms. The Commission estimates that 75 percent of the respondents, which may include small businesses, will contract out the burden of responding. The Commission estimates that it will take approximately 30 minutes to coordinate information with those contractors. The remaining 25 percent of respondents, which may include small businesses, are estimated to employ in-house staff to provide the information. Applicants filing electronically, including small businesses will not incur any per minute on-line charge. The Commission estimates that applicants contracting out the information would use an attorney or engineer (average of $200 per hour) to prepare the information.

57. Narrowband PCS applicants and licensees, including small businesses, will be subject to the reporting and recordkeeping requirements already contained in the Commission's part 1 competitive bidding rules, which apply to all auctionable services. These part 1 rules include the unjust enrichment rule set forth at 47 CFR 1.2111, which includes a reporting requirement for applicants seeking approval of a transfer of control or assignment of license within three years of receiving a new license through competitive bidding. The part 1 rules also include the uniform ownership disclosure requirements of 47 CFR 1.2112, which require all auction applicants to disclose the real party or parties in interest by including as an exhibit to their short-form applications detailed ownership information. The Commission finds that these rules, combined with its controlling interest standard and definition of ''affiliate,'' will help to ensure that only qualifying applicants obtain the benefits of its small business provisions, without being unduly burdensome. In addition, narrowband PCS licensees that qualify as designated entities will be required to maintain at their facilities or by a designated agent, for the term of the license, information relevant to their eligibility for designated entity status. This requirement will further help to ensure that only qualifying applicants obtain the benefits of the Commission's small business provisions.

v. Steps Taken To Minimize Burdens on Small Entities

58. The rules adopted in the *Second R&O* are designed to implement Congress' goal of giving small businesses, as well as other entities, the opportunity to participate in the provision of spectrum-based services. The rules are also consistent with the Communications Act's mandate to identify and eliminate market entry barriers for entrepreneurs and small businesses in the provision and ownership of telecommunications services. *See generally* 47 U.S.C. 257, 309(j).

59. *Service Areas.* The Commission finds that MTAs, rather than nationwide and regional geographic areas, are the most appropriate geographic area for licensing the remaining narrowband PCS spectrum because they will serve the needs of a wide range of entities, including both large and small service providers. Certain commenters argued that any additional nationwide or regional licenses would be too costly for small businesses to acquire and build out. MTAs, however, are not too large to preclude the entry of small businesses, and those interested in service areas larger than MTAs will be able to create such areas by aggregating licenses.

60. *Bidding Credits.* To ensure meaningful participation of small business entities in the auctions, the Commission adopts a two-tiered definition of small businesses in the *Second R&O.* A small business is an entity that, together with affiliates and controlling interests, has average gross revenues for the three preceding years of not more than $40 million. A very small business is an entity that, together with affiliates and controlling interests, has average gross revenues for the three preceding years of not more than $15 million. Small businesses are eligible for a 15 percent bidding credit. Very small businesses are eligible for a 25 percent bidding credit. In contrast to the Commission's previous rules, bidding credits will now be applicable to narrowband PCS licenses on all channels.

61. *Partitioning and Disaggregation.* The *Second R&O* adopts rules permitting narrowband PCS licensees to partition portions of their geographic areas, or disaggregate portions of the spectrum for which they hold a license, to other entities qualified to be licensees. Such partitioning and disaggregation will facilitate market entry by parties that may lack the financial resources to participate in auctions, including small businesses. Partitioning and disaggregation are expected to enable small businesses to obtain licenses for areas smaller than nationwide, regional or MTA areas, or smaller amounts of spectrum, at costs they will be able to afford. The Commission's decision to allow parties to partitioning or disaggregation agreements to choose between two options to meet their coverage requirements will provide small businesses with more flexibility in managing their resources.

62. *Substantial Service Option.* The *Second R&O* allows narrowband PCS licensees to demonstrate ''substantial service'' as an alternative to meeting the coverage requirements set forth in the existing rules. The Commission finds that a substantial service option may be very useful in allowing licensees, including small businesses, to use spectrum flexibly to provide new and innovative services uninhibited by a requirement that they meet a specific coverage benchmark or lose their license.

63. *Application of Part 1 Standardized Rules.* The Commission believes that its application of the part 1 standardized rules regarding eligible entities, unjust enrichment, and bidding credits will assist small businesses because the resulting predictability will facilitate the business planning and capital fundraising process.

vi. Significant Alternatives Considered

64. The Commission considered and rejected the following alternative proposals concerning service areas, spectrum aggregation, response channels, coverage requirements, nationwide paging licensees, competitive bidding rules, installment payments, and disaggregation.

65. *Service Areas.* The Commission declined to adopt Metrocall's, Celpage's and Benbow's recommendation that it use a combination of regional and MTA service areas for future licensing of narrowband PCS. Similarly, the Commission declined to adopt Arch's proposal that it allocate one of the two remaining 50 kHz paired channels as a nationwide license. Taking into consideration other commenters' argument that it would be too costly for small businesses to acquire and build out nationwide and regional licenses, the Commission decided to use MTAs for future licensing. The Commission also declined to adopt several commenters' recommendation that it use BTA-based licenses to license narrowband PCS spectrum. The Commission concluded that using MTAs rather than BTAs would not

compromise the goal of ensuring entry for small businesses.

66. *Spectrum Aggregation.* In the *Second R&O*, the Commission considered the argument that it should maintain the narrowband PCS spectrum aggregation limit, which was originally adopted to ensure that narrowband PCS services would be offered on a competitive basis. The Commission decided to eliminate the narrowband PCS aggregation limit, finding that the aggregation limit is not needed to prevent an undue concentration of licenses and that it may be harmful if it disadvantages narrowband PCS licensees in competing against other services.

67. *Response Channels.* In the *Second R&O*, the Commission considered and rejected its tentative conclusion that the response channels should not be restricted to mobile-to-base transmissions, provided that licensees comply with the relevant rules regarding maximum transmitter power and interference. The Commission agreed with commenters Arch, Benbow, and PCIA that allowing these channels to be used for other purposes would cause harmful interference with current narrowband PCS licensees and determined that it would retain the current rule restricting use of the response channels to mobile-to-base transmissions.

68. *Construction and Coverage Requirements.* The Commission declined to adopt recommendations by certain commenters that it modify its current construction benchmarks. It declined, for example, to adopt Arch's and Benbow's suggestion that it eliminate the five-year construction requirement and allow both existing and new narrowband PCS licensees to meet a 37.5 percent population benchmark by the tenth year of their license terms. The Commission found that its five- and ten-year construction benchmarks provide sufficient time for narrowband PCS licensees to construct their systems. The nationwide narrowband PCS licensees that have reached their five-year buildout benchmarks have all represented that they met the requirement, and none requested a waiver. The Commission found that there is no need to alter the current benchmarks, and that it is best to address any problems that individual licensees may have because of difficulties with financing or equipment availability by evaluating requests for waiver on a case-by-case basis.

69. Several commenters opposed the adoption of a ''substantial service'' requirement on the grounds that replacing the existing coverage requirements with a substantial service test would encourage speculation, fraud, and anticompetitive behavior. In considering and rejecting this argument, the Commission concluded that coverage requirements, including a substantial service standard, encourage the provision of service to areas that would not necessarily receive service expeditiously solely through the operation of market forces. The Commission found that the substantial service option may be very useful in allowing licensees to use spectrum flexibly to provide new and innovative services uninhibited by a requirement that they meet a specific coverage benchmark or lose their license. The Commission also concluded that permitting licensees to make a substantial service showing may encourage them to build out in rural areas. The Commission also declined to adopt Ameritech's recommendation that substantial service be defined as ''service that is sound, favorable, and reasonably capable of meeting an appropriate portion of the public demand for one or more of the communications services of which the system is capable under the Commission's rules.'' In the past the Commission has offered guidance to licensees in other services with regard to factors that it would consider in evaluating whether the substantial service requirement has been met, and it will maintain this practice with respect to narrowband PCS.

70. *Nationwide Paging Licenses.* In the *Paging MO&O/Third Report and Order*, the Commission considered the issue of coverage requirements for nationwide geographic area paging licensees and deferred any decision on the issue until it resolved similar matters in the instant narrowband PCS rulemaking proceeding. In the *Second R&O,* the Commission found that all nationwide paging licensees are already providing sufficient coverage to meet the five-year benchmark applicable to nationwide narrowband PCS licenseees, and some of them have met the ten-year benchmark. Thus, the Commission concluded that the build-out requirements imposed on nationwide paging licensees under its previous rules were adequate to promote coverage equivalent to that of nationwide narrowband PCS licensees, and therefore it is not necessary to adopt coverage requirements for nationwide paging licensees that would be in addition to the build-out requirements they have already met.

71. *Competitive Bidding Rules.* The Commission declined to adopt certain commenters' recommendation that it require applicants to identify each frequency in each market on which they wish to bid and submit upfront payments for each individual license. The Commission found that its current rules, which require an upfront payment to cover only those licenses on which an applicant intends to bid in any one round, are appropriate because they allow bidders the flexibility to pursue backup strategies during the course of an auction in the event they are unable to obtain their first choice of licenses. The Commission also declined to modify its anti-collusion rule to provide a safe harbor for carriers engaged in negotiations regarding mergers or intercarrier agreements, as requested by PCIA. The Commission has declined to create such a safe harbor in the past, and it has not been presented with an adequate justification for departing from that decision here. Finally, several commenters requested that the Commission provide auction participants with the identity of all competing bidders. It has generally been the Commission's practice to disclose the identity of all bidders in Commission auctions. If, in the case of particular auctions, a limit on such information appears warranted, the Wireless Telecommunications Bureau will, consistent with the Balanced Budget Act of 1997 and current practice, seek comment on the issue in a public notice prior to the auction.

72. *Installment Payments.* The Commission declined to adopt installment payment plans for small businesses participating in narrowband PCS auctions. This action is consistent with the Commission's policy set forth in the *Part 1 Third Report and Order*, where the Commission noted that its experience has demonstrated that installment payments may not be necessary to ensure a meaningful opportunity for small businesses to participate successfully in its auction program.

73. *Bidding Credits.* The Commission decided to adopt a 15 percent bidding credit for small businesses and a 25 percent bidding credit for very small businesses. A small business is an entity with average annual gross revenues not to exceed $40 million for the preceding three years, and a very small business is an entity with average annual gross revenues not to exceed $15 million for the preceding three years. The Commission declined to adopt higher bidding credits, as Merlin and RTG recommend. The bidding credits adopted are those provided for in the Commission's part 1 standardized competitive bidding rules. The Commission believes that these levels of

bidding credits, which are higher than those proposed in the *Narrowband PCS R&O/Further Notice*, are sufficient to promote the participation of small businesses in the provision of narrowband PCS, and that there is no reason to deviate from the standard schedule of bidding credits here.

74. *Bidding Credits for Rural Telephone Companies.* The Commission declined to adopt RTG's and NTCA's recommendation that it provide special bidding credits for rural telephone companies in order to meet its obligation to ensure that rural telephone companies have the opportunity to participate in spectrum-based services. The Commission has no evidence that large rural telephone companies encounter barriers to capital formation comparable to those faced by other designated entities. In addition, the vast majority of rural telephone companies that have participated in the Commission's auctions to date have identified themselves as small businesses and have qualified for bidding credits on that basis. Thus, the Commission believes that small business bidding credits are sufficient to ensure that rural telephone companies have the ability to participate in spectrum-based services, and it does not believe that rural telephone companies will be unable to compete in narrowband PCS auctions or the messaging marketplace without special financial preferences.

75. *Attribution.* The Commission declined to adopt Merlin's recommendations regarding amending its rules to adapt to various business structures. Merlin suggests, for example, that, for purposes of defining whether a company is widely held, whatever its form of business organization, the Commission should formulate its rules to state that a widely held company is one in which no single equity holder has 15 percent or more of the equity of the applicant. The Commission found that the controlling interest standard adopted in the *Second R&O*, along with the definition of ''affiliate'' set forth in part 1 of the Commission's rules, adequately addresses Merlin's concerns.

76. *Disaggregation.* Some commenters stated that disaggregation is not technically feasible and therefore it is unnecessary for the Commission to address the issue at this time. In considering and rejecting such arguments, the Commission concluded that marketplace forces should determine whether it is technically feasible to disaggregate narrowband spectrum. The Commission also concluded that allowing narrowband PCS spectrum disaggregation could potentially expedite the introduction of service to underserved areas and provide increased flexibility to licensees. Finally, the Commission found that disaggregation combined with bidding credits and geographic partitioning will facilitate the acquisition of narrowband PCS spectrum by small businesses.

77. *Report to Congress.* The Commission will send a copy of the *Second R&O*, including this FRFA, in a report to be sent to Congress pursuant to the Small Business Regulatory Enforcement Fairness Act of 1996. *See* 5 U.S.C. 801(a)(1)(A). In addition, the Commission will send a copy of the *Second R&O*, including FRFA, to the Chief Counsel for Advocacy of the Small Business Administration.

List of Subjects in 47 CFR Part 24

Communications common carriers, Personal communications services, Radio, Reporting and recordkeeping requirements.

Federal Communications Commission.

William F. Caton,

Deputy Secretary.

Rule Changes

For the reasons discussed in the preamble, the Federal Communications Commission amends 47 CFR part 24 as follows:

PART 24—PERSONAL COMMUNICATIONS SERVICES

1. The authority citation for part 24 continues to read as follows:

Authority: 47 U.S.C. 154, 301, 302, 303, 309 and 332.

§ 24.101 [Removed and Reserved]

2. Remove and reserve § 24.101.

3. Section 24.102 is amended by removing paragraph (d) and by revising the introductory text to read as follows:

§ 24.102 Service areas.

Narrowband PCS service areas are nationwide, regional, and Major Trading Areas (MTAs), as defined in this section. MTAs are based on the Rand McNally 1992 Commercial Atlas & Marketing Guide, 123rd Edition, at pages 38–39 (MTA Map). Rand McNally organizes the 50 States and the District of Columbia into 47 MTAs. The MTA Map is available for public inspection in the FCC's Library, Room TW–B505, 445 12th Street SW, Washington, D.C.

* * * * *

4. Section 24.103 is amended by removing the Note and by revising paragraph (a), (b), (c), (d), introductory text of paragraph (e), and (f) to read as follows:

§ 24.103 Construction requirements.

(a) Nationwide narrowband PCS licensees shall construct base stations that provide coverage to a composite area of 750,000 square kilometers or serve 37.5 percent of the U.S. population within five years of initial license grant date; and, shall construct base stations that provide coverage to a composite area of 1,500,000 square kilometers or serve 75 percent of the U.S. population within ten years of initial license grant date. Licensees may, in the alternative, provide substantial service to the licensed area as provided in paragraph (d) of this section.

(b) Regional narrowband PCS licensees shall construct base stations that provide coverage to a composite area of 150,000 square kilometers or serve 37.5 percent of the population of the service area within five years of initial license grant date; and, shall construct base stations that provide coverage to a composite area of 300,000 square kilometers or serve 75 percent of the service area population within ten years of initial license grant date. Licensees may, in the alternative, provide substantial service to the licensed area as provided in paragraph (d) of this section.

(c) MTA narrowband PCS licensees shall construct base stations that provide coverage to a composite area of 75,000 square kilometers or 25 percent of the geographic area, or serve 37.5 percent of the population of the service area within five years of initial license grant date; and, shall construct base stations that provide coverage to a composite area of 150,000 square kilometers or 50 percent of the geographic area, or serve 75 percent of the population of the service area within ten years of initial license grant date. Licensees may, in the alternative, provide substantial service to the licensed area as provided in paragraph (d) of this section.

(d) As an alternative to the requirements of paragraphs (a), (b), and (c) of this section, narrowband PCS licensees may demonstrate that, no later than ten years after the initial grant of their license, they provide substantial service to their licensed area. Licensees choosing this option must notify the FCC by filing FCC Form 601, no later than 15 days after the end of the five year period following the initial grant of their license, that they plan to satisfy the alternative requirement to provide substantial service. ''Substantial service'' is defined as service that is sound, favorable, and substantially above a level of mediocre service that would barely warrant renewal.

(e) In demonstrating compliance with the construction requirements set forth in this section, licensees must base their calculations on signal field strengths that ensure reliable service for the technology utilized. Licensees may determine the population of geographic areas included within their service contours using either the 1990 census or the 2000 census, but not both.

* * * * *

(f) Upon meeting the five and ten year benchmarks in paragraphs (a), (b), and (c) of this section, or upon meeting the substantial service alternative in paragraph (d), licensees shall notify the Commission by filing FCC Form 601 and including a map and other supporting documentation that demonstrate the required geographic area coverage, population coverage, or substantial service to the licensed area. The notification must be filed with the Commission within 15 days of the expiration of the relevant period.

* * * * *

5. Section 24.104 is added to read as follows:

§ 24.104 Partitioning and disaggregation.

Nationwide, regional, and MTA licensees may apply to partition their authorized geographic service area or disaggregate their authorized spectrum at any time following grant of their geographic area authorizations.

(a) *Application required.* Parties seeking approval for partitioning and/or disaggregation shall apply for partial assignment of a license pursuant to § 1.948 of this chapter.

(b) *Partitioning.* In the case of partitioning, applicants and licensees must file FCC Form 603 pursuant to § 1.948 of this chapter and describe the partitioned service area on a schedule to the application. The partitioned service area shall be defined by up to 120 sets of geographic coordinates at points at every 3 degrees azimuth from a point within the partitioned service area along the partitioned service area boundary unless either an FCC-recognized service area is used (*e.g.*, MEA or EA) or county lines are followed. The geographical coordinates must be specified in degrees, minutes, and seconds to the nearest second latitude and longitude, and must be based upon the 1983 North American Datum (NAD83). In the case where FCC-recognized service areas or county lines are used, applicants need only list the specific area(s) through use of FCC designations or county names that constitute the partitioned area.

(c) *Disaggregation.* Spectrum may be disaggregated in any amount.

(d) *Combined partitioning and disaggregation.* Licensees may apply for partial assignment of authorizations that propose combinations of partitioning and disaggregation.

(e) *License term.* The license term for a partitioned license area and for disaggregated spectrum shall be the remainder of the original licensee's license term as provided for in § 1.955 of this chapter.

(f) *Coverage requirements for partitioning.* (1) Parties to a partitioning agreement must satisfy at least one of the following requirements:

(i) The partitionee must satisfy the applicable coverage requirements set forth in § 24.103 for the partitioned license area; or

(ii) The original licensee must meet the coverage requirements set forth in § 24.103 for the entire geographic area. In this case, the partitionee must meet only the requirements for renewal of its authorization for the partitioned license area.

(2) Parties seeking authority to partition must submit with their partial assignment application a certification signed by both parties stating which of the options they select.

(3) Partitionees must submit supporting documents showing compliance with their coverage requirements as set forth in § 24.103.

(4) Failure by any partitionee to meet its coverage requirements will result in automatic cancellation of the partitioned authorization without further Commission action.

(g) *Coverage requirements for disaggregation.* (1) Parties to a disaggregation agreement must satisfy at least one of the following requirements:

(i) Either the disaggregator or disaggregatee must satisfy the coverage requirements set forth in § 24.103 for the entire license area; or

(ii) Parties must agree to share responsibility for meeting the coverage requirements set forth in § 24.103 for the entire license area.

(2) Parties seeking authority to disaggregate must submit with their partial assignment application a certification signed by both parties stating which of the requirements they select.

(3) Disaggregatees must submit supporting documents showing compliance with their coverage requirements as set forth in § 24.103.

(4) Parties that accept responsibility for meeting the coverage requirements and later fail to do so will be subject to automatic license cancellation without further Commission action.

6. Section 24.129 is amended by revising the introductory text and paragraph (c), removing paragraph (d) and removing the "*" whenever it appears to read as follows:

§ 24.129 Frequencies.

The following frequencies are available for narrowband PCS.

* * * * *

(c) Nine frequencies are available for assignment on an MTA basis as follows:

(1) Two 50 kHz channels paired with 50 kHz channels:

Channel 18: 940.35–940.40 and 901.35–901.40 MHz; and,
Channel 19: 940.40–940.45 and 901.40–901.45 MHz.

(2) Five 50 kHz channels paired with 12.5 kHz channels:

Channel 20: 930.75–930.80 and 901.8375–901.8500 MHz;
Channel 21: 930.80–930.85 and 901.8500–901.8625 MHz;
Channel 22: 930.85–930.90 and 901.8625–901.8750 MHz;
Channel 25: 930.90–930.95 and 901.8750–901.8875 MHz; and,
Channel 26: 930.95–931.00 and 901.8875–901.9000 MHz.

(3) Two 50 kHz unpaired channels:

Channel 23: 940.90–940.95 MHz; and
Channel 24: 940.95–941.00 MHz.

* * * * *

7. Section 24.130 is revised to read as follows:

§ 24.130 Paging response channels.

The following eight 12.5 kHz unpaired channels are available for assignment on an MTA basis and shall be used only to provide mobile-to-base station communications:

A: 901.9000–901.9125 MHz;
B: 901.9125–901.9250 MHz;
C: 901.9250–901.9375 MHz;
D: 901.9375–901.9500 MHz;
E: 901.9500–901.9625 MHz;
F: 901.9625–901.9750 MHz;
G: 901.9750–901.9875 MHz; and
H: 901.9875–902.0000 MHz.

8. Section 24.132 is amended by revising paragraph (e) to read as follows:

§ 24.132 Power and antenna height limits.

* * * * *

(e) MTA and regional base stations located less than 80 kilometers (50 miles) from the licensed service area border must limit their effective radiated power in accordance with the following formula:

$$PW = 0.0175 \times dkm^{**} \; 6.6666 \times hm^{**} - 3.1997$$

PW is effective radiated power in watts
dkm is distance in kilometers
hm is antenna HAAT in meters; see § 24.53 for HAAT calculation method

* * * * *

§§ 24.302 through 24.309 [Removed and Reserved]

9. Remove and reserve §§ 24.302 through 24.309.

§ 24.320 [Removed and Reserved]

10. Section 24.320 is removed and reserved.

11. Section 24.321 is added to read as follows:

§ 24.321 Designated entities.

(a) *Eligibility for small business provisions.* (1) A small business is an entity that, together with its controlling interests and affiliates, has average gross revenues not exceeding $40 million for the preceding three years.

(2) A very small business is an entity that, together with its controlling interests and affiliates, has average gross revenues not exceeding $15 million for the preceding three years.

(3) For purposes of determining whether an entity meets either of the definitions set forth in paragraphs (a)(1) and (a)(2) of this section, the gross revenues of the entity, its controlling interests and affiliates shall be considered on a cumulative basis and aggregated. An applicant seeking status as a small business or very small business under this section must disclose on its short- and long-form applications, separately and in the aggregate, the gross revenues of the applicant (or licensee), its controlling interests and affiliates for each of the previous three years.

(4) Persons or entities that hold interests in an applicant (or licensee) that are affiliates of each other or have an identity of interests identified in § 1.2110(b)(4)(iii) of this chapter will be treated as though they were one person or entity and their ownership interests aggregated for purposes of determining an applicant's (or licensee's) compliance with the requirements of this section.

(5) Where an applicant (or licensee) cannot identify controlling interests under the standards set forth in this section, the gross revenues of all interest holders in the applicant, and their affiliates, will be attributable.

(6) A consortium of small businesses (or a consortium of very small businesses) is a conglomerate organization formed as a joint venture between or among mutually independent business firms, each of which individually satisfies the definition in paragraph (a)(1) of this section (or each of which individually satisfies the definition in paragraph (a)(2) of this section). Where an applicant or licensee is a consortium of small businesses (or very small businesses), the gross revenues of each small business (or very small business) shall not be aggregated.

(7) Designated entities must describe on their long-form applications how they satisfy the requirements for eligibility for designated entity status, and must list and summarize on their long-form applications all agreements that affect designated entity status such as partnership agreements, shareholder agreements, management agreements and other agreements, including oral agreements, establishing, as applicable, *de facto* or *de jure* control of the entity. Such information must be maintained at the licensee's facilities or by its designated agent for the term of the license in order to enable the Commission to audit designated entity eligibility on an ongoing basis.

(b) *Controlling interest.* (1) For purposes of this section, a controlling interest includes individuals or entities with either *de jure* or *de facto* control of the applicant. *De jure* control is evidenced by holdings of greater than 50 percent of the voting stock of a corporation, or in the case of a partnership, general partnership interests. *De facto* control is determined on a case-by-case basis. An entity must disclose its equity interest and demonstrate at least the following indicia of control to establish that it retains *de facto* control of the applicant:

(i) The entity constitutes or appoints more than 50 percent of the board of directors or management committee;

(ii) The entity has authority to appoint, promote, demote, and fire senior executives that control the day-to-day activities of the licensee; and

(iii) The entity plays an integral role in management decisions.

(2) The following rules apply for the calculation of certain interests.

(i) Ownership interests shall be calculated on a fully diluted basis; all agreements such as warrants, stock options, and convertible debentures will generally be treated as if the rights thereunder already have been fully exercised.

(ii) Partnership and other ownership interests and any stock interest equity, or outstanding stock, or outstanding voting stock shall be attributed as specified in this paragraph (b).

(iii) Stock interests held in trust shall be attributed to any person who holds or shares the power to vote such stock, to any person who has the sole power to sell such stock, and to any person who has the right to revoke the trust at will or to replace the trustee at will. If the trustee has a familial, personal, or extra-trust business relationship to the grantor or the beneficiary, the stock interests held in trust will be attributed to the grantor or beneficiary, as appropriate.

(iv) Non-voting stock shall be attributed as an interest in the issuing entity.

(v) Limited partnership interests shall be attributed to limited partners and shall be calculated according to both the percentage of equity paid in and the percentage of distribution of profits and losses.

(vi) Officers and directors of an entity shall be considered to have a controlling interest in the entity. The officers and directors of an entity that controls a licensee or applicant shall be considered to have a controlling interest in the licensee or applicant.

(vii) Ownership interests that are held indirectly by any party through one or more intervening corporations will be determined by successive multiplication of the ownership percentages for each link in the vertical ownership chain and application of the relevant attribution benchmark to the resulting product, except that if the ownership percentage for an interest in any link in the chain exceeds 50 percent or represents actual control, it shall be treated as if it were a 100 percent interest.

(viii) Any person who manages the operations of an applicant or licensee pursuant to a management agreement shall be considered to have a controlling interest in such applicant or licensee if such person, or its affiliate, has authority to make decisions or otherwise engage in practices or activities that determine, or significantly influence:

(A) The nature or types of services offered by such an applicant or licensee;

(B) The terms upon which such services are offered; or

(C) The prices charged for such services.

(ix) Any licensee or its affiliate who enters into a joint marketing arrangement with an applicant or licensee, or its affiliate, shall be considered to have a controlling interest, if such applicant or licensee, or its affiliate, has authority to make decisions or otherwise engage in practices or activities that determine, or significantly influence:

(A) The nature or types of services offered by such an applicant or licensee;

(B) The terms upon which such services are offered; or

(C) The prices charged for such services.

(c) *Bidding credits.* (1) After August 7, 2000, a winning bidder that qualifies as a small business or a consortium of small businesses as defined in this section may use the bidding credit specified in § 1.2110(e)(2)(iii) of this

chapter. A winning bidder that qualifies as a very small business or a consortium of very small businesses as defined in this section may use the bidding credit specified in § 1.2110(e)(2)(ii) of this chapter.

(2)(i) Businesses owned by members of minority groups and women, including small businesses owned by members of minority groups and women, that are winning bidders on nationwide licenses on Channel 5, Channel 8, and Channel 11 prior to [effective date of rules] will be eligible for a twenty-five (25) percent bidding credit.

(ii) Businesses owned by members of minority groups and women, including small businesses owned by members of minority groups and women, that are winning bidders on regional licenses on Channel 13 and Channel 17 prior to August 7, 2000 will be eligible for a forty (40) percent bidding credit.

(d) Installment payments. Small businesses, including small businesses owned by members of minority groups and women, that are winning bidders on any regional license prior to August 7, 2000 will be eligible to pay the full amount of their winning bids in installments over the term of the license pursuant to the terms set forth in § 1.2110(f) of this chapter.

12. Section 24.404 is amended by revising paragraph (a)(1) to read as follows:

§ 24.404 Eligibility.

(a) * * *

(1) The applicant is qualified under the applicable laws and the regulations, policies and decisions issued under the laws, including § 24.12;

* * * * *

§ 24.430 [Amended]

13. Section 24.430 is amended by removing paragraph (a)(4), redesignating paragraph (a)(5) as paragraph (a)(4) and adding the word ''and'' at the end of paragraph (a)(3).''

[FR Doc. 00–13961 Filed 6–2–00; 8:45 am]

BILLING CODE 6712–01–P

DEPARTMENT OF COMMERCE

National Oceanic and Atmospheric Administration

50 CFR Part 635

I.D. 052500B

Atlantic Highly Migratory Species (HMS) Fisheries; Large Coastal Shark, Small Coastal Shark, and Pelagic Shark Species

AGENCY: National Marine Fisheries Service (NMFS), National Oceanic and Atmospheric Administration (NOAA), Commerce.

ACTION: Quota adjustment and fishing season notification.

SUMMARY: NMFS announces that the landings of large coastal sharks (LCS) in the Atlantic Ocean, Gulf of Mexico, and Caribbean Sea totaled 742.7 metric tons (mt) dressed weight (dw) during the first semiannual 2000 season. Because this constitutes an overharvest of 100 mt dw, the second semiannual 2000 LCS quota is reduced accordingly. NMFS also notifies eligible participants of the opening and closing of fishing seasons for Atlantic LCS, small coastal sharks (SCS), and pelagic sharks.

DATES: The fishery opening for LCS is effective July 1, 2000; the LCS closure is effective from 11:30 p.m. local time August 7, 2000, through December 31, 2000. The fishery opening for SCS and pelagic sharks are July 1, 2000; no closure dates for these fisheries are included in this document.

FOR FURTHER INFORMATION CONTACT: Margo Schulze-Haugen, Karyl Brewster-Geisz or Steve Meyers, 301–713–2347; fax 301–713–1917.

SUPPLEMENTARY INFORMATION: The Atlantic shark fishery is managed under the Fishery Management Plan for Atlantic Tunas, Swordfish, and Sharks (HMS FMP), and its implementing regulations found at 50 CFR part 635 issued under authority of the Magnuson-Stevens Fishery Conservation and Management Act (16 U.S.C. 1801 *et seq.*).

On June 30, 1999, NMFS received a Court Order from Judge Steven D. Merryday relative to the May 1997 lawsuit challenging commercial harvest quotas for Atlantic sharks. Specifically, the order states: ''. . . the Court hereby preliminarily, and until further order of the Court, expressly ENJOINS the defendant and his designees from enforcing the 1999 regulations, 64 FR 29090 (May, 28, 1999) with respect to Atlantic shark commercial catch quotas and fish-counting methods (including the counting of dead discards and state commercial landings after federal closures) that are different from the quotas and fish counting methods prescribed by the 1997 Atlantic shark regulations, 62 FR 16648 (April 7, 1997).''

As such, the annual 2000 LCS quota continues at the 1997 level of 1,285 mt dw for all species of LCS, (Table 1 of appendix A to part 635), with no minimum size on ridgeback LCS. The SCS and pelagic shark quotas also revert to their annual 1997 levels, of 1,760 and 580 mt dw, respectively. The 1997 prohibited species list includes only five prohibited species: white, basking, whale, sand tiger and bigeye sand tiger. The limited access provisions for commercial harvests still apply, including trip limits for directed and incidental shark permit holders.

A motion to clarify the terms of the court injunction is pending before the court. If granted, the 1999 prohibited species list would be in effect for the Atlantic commercial shark fishery. NMFS will announce the court's decision with specific details in the **Federal Register** once the court rules on the motion.

Under the terms of the Court injunction, the Assistant Administrator for Fisheries, NOAA (AA), is authorized to adjust the semiannual quota to reflect actual catches during the preceding semiannual period. Harvest data submitted to NMFS indicate that the landings of LCS from January through March 31, 2000, totaled 742.7 mt dw, which is 100.7 mt dw more than the available semiannual quota of 642.5 mt dw. Therefore, the adjusted quota for LCS for the second 2000 semiannual period is decreased from 642.5 mt dw to 542 mt dw. The adjusted quota of 542 mt dw is available for the period July 1 through December 31, 2000.

The second semiannual fishing season of the 2000 fishing year for the commercial fishery for LCS in the Western North Atlantic Ocean, including the Gulf of Mexico and the Caribbean Sea, will open July 1, 2000. Catch rate data from the second semiannual fishing seasons from 1997, 1998, and 1999 for LCS species indicate that the available LCS quota of 542.5 mt dw will be attained within 38 days. Accordingly, the AA has determined, based on these projected catch rates and the adjusted quota, that the quota for the 2000 second semiannual season for LCS in or from the Western North Atlantic Ocean, including the Gulf of Mexico and Caribbean Sea, will be attained as of August 7, 2000. The LCS fishery will close August 7, 2000, at 11:30 p.m. local time.

During a closure, retention of, fishing for, possessing or selling LCS are prohibited for persons fishing aboard vessels issued a limited access permit under § 635.4. The sale, purchase, trade, or barter of carcasses and/or fins of LCS harvested by a person aboard a vessel that has been issued a permit under § 635.4 are prohibited, except for those that were harvested, offloaded, and sold, traded, or bartered prior to the closure and were held in storage by a dealer or processor.

The second semiannual quota for SCS is 880 mt dw. The second semiannual

quota for pelagic sharks is 290 mt dw. When quotas are projected to be reached for these fisheries, the AA will file notification of closure at the Office of the Federal Register at least 14 days before the effective date.

Those vessels that have not been issued a limited access permit under § 635.4 may not sell sharks and are subject to the recreational retention limits and size limits specified at §§ 635.20(e) and 635.22(c). The recreational fishery is not affected by any closure in the commercial fishery.

Classification

This action is taken under 50 CFR part 635 and is exempt from review under Executive Order 12866.

Authority: 16 U.S.C. 1801 *et seq.*

Dated: May 31, 2000.

Bruce C. Morehead,

Acting Director, Office of Sustainable Fisheries, National Marine Fisheries Service.

[FR Doc. 00–14036 Filed 5–31–00; 4:33 pm]

BILLING CODE 3510–22–F

Proposed Rules

Federal Register
Vol. 65, No. 109
Tuesday, June 6, 2000

This section of the FEDERAL REGISTER contains notices to the public of the proposed issuance of rules and regulations. The purpose of these notices is to give interested persons an opportunity to participate in the rule making prior to the adoption of the final rules.

DEPARTMENT OF AGRICULTURE

Agricultural Marketing Service

7 CFR Part 54

[Docket No. LS–98–09]

RIN 0581–AB69

Regulations Governing the Certification of Sanitary Design and Fabrication of Equipment Used in the Slaughter, Processing, and Packaging of Livestock and Poultry Products

AGENCY: Agricultural Marketing Service, USDA.

ACTION: Proposed rule.

SUMMARY: The Agricultural Marketing Service (AMS) is proposing to develop a voluntary, user-fee funded program under the authority of the Agricultural Marketing Act of 1946 to inspect and certify equipment and utensils used to process livestock and poultry products. Livestock and poultry processing equipment and utensils inspected and certified by AMS to voluntary consensus standards for sanitary design will provide a third party assurance that they meet minimum requirements for cleanability, suitability of materials used in construction, durability and inspectability. Development of this program is required under the provisions of the 1999 Agricultural Appropriations Bill.

DATES: Comments must be received by August 7, 2000.

ADDRESSES: Interested persons are invited to submit written comments concerning this program. Send two copies of comments to Barry L. Carpenter, Deputy Administrator, Livestock and Seed Program, Docket No. LS–99–12, Room 2092 South Agriculture Building, 1400 Independence Ave., SW, Washington, DC 20250–0249.

All comments received in response to this notice will be considered part of the public record and will be available for viewing in Room 2092 South Agriculture Building, 1400 Independence Ave., SW, Washington, DC 20250–0249 between 8:30 a.m. and 4:30 p.m., Monday through Friday.

FOR FURTHER INFORMATION CONTACT: Barry Carpenter, Deputy Administrator, Livestock and Seed Program, by telephone at (202) 720–5705 or by Fax at (202) 720–3499.

SUPPLEMENTARY INFORMATION:

Background

The 1999 Agricultural Appropriations Bill, (Pub. L. 105–277, sec. 747), requires AMS to develop a voluntary, user-fee funded program to inspect and certify equipment and utensils used to process livestock and poultry products. From 1975 to 1997, a similar function was carried out by USDA on a mandatory prior approval basis by USDA's Food Safety and Inspection Service (FSIS) as a prerequisite for equipment use in federally inspected meat and poultry packing and processing establishments. The FSIS Equipment Branch formally evaluated equipment and utensils proposed by manufacturers or suppliers before they could be used in official establishments to assure they could be maintained in a sanitary condition. The program focused on identifying and correcting problems during the initial development of equipment and utensils, instead of resolving problems after equipment and utensils were put into widespread use.

FSIS's acceptance of new, modified, or reconditioned equipment and utensils for use in federally inspected meat and poultry establishments was a two-step process. First, FSIS Equipment Branch personnel evaluated the design and construction of equipment by reviewing assembly-type drawings and corresponding parts and material lists submitted to the Branch by the equipment manufacturer. Then, if necessary, FSIS inspectors reviewed the in-establishment operation of the equipment and reported their findings to the Equipment Branch. Commercially available equipment was accepted and listed in an FSIS reference guide, ''Accepted Meat and Poultry Equipment.'' Once equipment was listed in this reference as acceptable, no further approval was needed on an establishment basis.

FSIS continues to ensure that equipment and utensils used in federally inspected facilities are of such material and construction as will facilitate their thorough cleaning and operational cleanliness, and not adulterate edible product. Also, FSIS still requires that equipment and utensils used in federally inspected establishments are constructed, maintained, and used in a manner that does not interfere with inspection. However, in an effort to remove ''command and control'' regulations that were contrary to FSIS' commitment to the Hazard Analysis and Critical Control Point approach to Federal meat inspection, and to provide federally inspected establishments with the flexibility to use equipment and utensils designed in the manner they deem to best maintain a sanitary environment for food production without having to seek prior approval, FSIS discontinued the mandatory prior approval program for equipment and utensils on September 24, 1997 (62 FR 45016).

At the time FSIS announced that it was discontinuing its prior approval program, equipment and utensil manufacturers and processors of livestock and poultry products expressed their desire to either continue the FSIS program or develop a new program through AMS on a voluntary, user-fee funded basis to inspect and certify equipment and utensils used to process livestock and poultry products to a sanitary standard. Subsequently, passage of the 1999 Omnibus Appropriations Bill required development of such a program under the Agricultural Marketing Act of 1946 (AMA) (7 U.S.C. 1621–1627).

Accordingly, on July 16, 1999, AMS published in the **Federal Register** (64 FR 38315) an advance notice of proposed rulemaking (ANPRM) and notice of public meeting to assist the Agency in the development of a complete inspection and certification program for equipment and utensils used to process livestock and poultry products.

Through the ANPRM and the public meeting, AMS sought information which would enable the Agency to develop an efficient and cost-effective program for inspecting and certifying equipment and utensils used to process livestock and poultry products. Specifically, AMS requested comments concerning: initiatives underway in the industry to develop a voluntary, consensus sanitary standard for the design and manufacture of equipment

and utensils used to process livestock and poultry products; the validity and usability of standards presented to AMS for consideration for adoption; criteria to be used by AMS to select a sanitary standard; and any other information which would aid AMS in administering the program.

The ANPRM solicited comments on the issue for a 60-day period ending September 14, 1999. The public meeting was held on August 10, 1999, in Room 107–A at the USDA Jamie L. Whitten Building, 12th and Jefferson Drive, SW, Washington, DC.

To assist interested parties in obtaining information on the proposed program and in reviewing comments as AMS received them, the Agency launched a website at www.ams.usda.gov/lsg/equip.htm/. Contained on this website were electronic versions of the AMS press releases related to the development of the program, the ANPRM, complete transcripts of the August 10, 1999, public meeting, and all comments received.

The public meeting was attended by 42 representatives of the meat and poultry packing and processing industry, equipment and utensil manufacturing industry, trade and professional associations, standards developers, and other interested parties. Twelve individuals provided prepared remarks at the meeting.

AMS received 51 comments during the comment period. One commenter submitted two comments requesting an extension of the comment period on the ANPRM until December 31, 1999. The agency believes that the 60-day comment period on the ANPRM and the public meeting that was held on August 10, 1999, gave interested persons sufficient opportunity to comment on the ANPRM. Furthermore, interested persons would have an opportunity to submit comments on AMS' proposed equipment and utensil certification program during the 60-day comment period for this proposed rule.

Nine commenters supported the development of the program. These commenters wanted a Government certification program for equipment and utensil design as an assurance of quality for buyers. While no commenters specifically stated opposition to the development of a equipment and utensil certification program, several commenters did provide differing recommendations on specific characteristics of such a program.

Several commenters recommended criteria that AMS should use in selecting standards to use as the basis of its certification program for equipment and utensils used to process livestock and poultry products. These criteria were (1) compatibility with current regulations, (2) compatibility with current industry practices, (3) ability to be understood and used by all interested parties, and (4) ability to be revised in a timely manner as regulatory requirements and industry practices change. AMS agrees that these criteria are important for evaluating proposed standards for equipment and utensil certification and has considered them in the development of this proposal.

Several commenters recommended that government employees administer the proposed equipment and utensil inspection and certification program. AMS agrees. AMS is proposing that Agency employees would perform the inspection and certification of equipment and utensils.

Three commenters recommended AMS offer an accreditation service for third parties to administer inspections and certifications of equipment and utensils on behalf of the Agency. In complying with the 1999 Agricultural Appropriations Bill which requires the Secretary of Agriculture to develop a program to inspect and certify agricultural processing equipment, and impose a fee for the inspection and certification, in a manner that is similar to the inspection and certification of agricultural products under the AMA, AMS would administer the certification program by using government employees.

One commenter provided criteria they believed should be a part of the administration of any certification program involving food safety. It is important to note that the purpose of this program is to provide a third-party inspection and certification program that equipment and utensils used to process livestock and poultry products meet the requirements of an identified sanitary standard. It is not to ensure food safety per se. Rather, the proposed program is designed to inspect and certify that equipment and utensils are capable of producing food products in a sanitary manner. The hygienic standards are developed with food safety as a primary focus. Hygienically designed equipment and utensils are capable of producing safe food. However, equipment and utensils meeting any sanitary standard, if not properly cleaned, maintained or used can result in the production of unsafe products. Equipment and utensil sanitation is only one aspect of food safety. FSIS is responsible for ensuring all Federally inspected meat and poultry establishments produce safe and wholesome products, regardless of whether the equipment and utensils used to process the products was certified by AMS under this proposed program.

Several commenters recommended that the proposed rule also address preventing conflicts of interest, employing staff with adequate qualifications and training, re-evaluation of equipment and utensils, appeals processes, providing a process for investigating reports of non-compliance, and control of certification marks. Most of these concerns are addressed in this proposed rule. The remaining concerns regarding employee conduct and ethics are dealt with in existing AMS and USDA instructions, policy and regulations.

Several commenters stated that any proposed program should be cost-effective. AMS agrees. The 1999 Agricultural Appropriations Bill directs the Secretary of Agriculture to develop this inspection and certification program, and impose a fee for the inspection and certification, in a manner that similar to the inspection and certification of agricultural products under the Agricultural Marketing Act of 1946, as amended (AMA). Under the AMA, AMS is required to collect reasonable fees for providing official services under 7 CFR part 54, including services provided under this proposed equipment and utensil certification program, to cover as nearly as practicable AMS costs for performing the service including related administrative and supervisory costs. Since the procedures used to inspect and certify equipment and utensils used to process livestock and poultry products are similar to those used to inspect and certify dairy processing equipment, AMS has decided to charge the same hourly fees for inspecting and certifying equipment and utensils used to process livestock and poultry products. Inspection and certification services are based on the hourly rate for applicants who request services on an hourly basis and appear at 7 CFR part 58 as published in the **Federal Register** at 62 FR 66258 on December 18, 1997. The current base hourly rate for such service is $56 per hour for service performed between 6:00 a.m. and 6:00 p.m. and $61.60 for service performed between 6:00 p.m. and 6:00 a.m., for the time required to perform the service calculated to the nearest 15-minute period, including the time required for preparation of certificates and reports and the travel time of the equipment review specialist in connection with the performance of the service. A minimum charge of one-half hour would be made for the service pursuant to each request

or certificate issued. If an applicant requests that certification service be performed on a holiday, Saturday, or Sunday or in excess of each 8-hour shift Monday through Friday, the applicant would be charged such service at a rate of 1 ½ times the rate which would be applicable for such service if performed during normal working hours.

Each applicant should determine if there is a economic advantage of using the service that outweighs the user-fees associated with receiving certification.

One commenter recommended that equipment that had prior approval from FSIS and was listed in the discontinued FSIS Directive 11220.1, ''Acceptable Meat and Poultry Equipment,'' be automatically certified as meeting the requirements of the proposed AMS program. AMS does not agree. The equipment and utensil certification program proposed herein would be based on a new set of sanitary standards, the requirements of which differ from the standards used in the former prior approval program administered by FSIS. To have equipment and utensils certified by AMS, manufacturers would have to resubmit their design of equipment and utensils previously approved by FSIS to AMS for evaluation.

One commenter requested that AMS work with FSIS to educate local FSIS inspectors about the proposed program when it begins. This suggestion has merit. AMS worked with FSIS during preparation of the advance notice of proposed rulemaking, the public meeting, and in the development of this proposed rule. AMS would continue to work with FSIS as this program develops to ensure FSIS is aware of components of the program as it develops.

Several commenters recommended that the proposed program adopt a standard or group of standards which are in harmony with other international standards and thus would aid equipment and utensil manufacturers in marketing their products internationally. Although the international marketing of equipment and utensils could be an allied benefit of this program, the primary purpose of this proposed program is to provide a third-party certification that equipment and utensils meet specified standards. International harmonization was one factor considered by AMS in selecting standards to inspect and certify equipment and utensils. However, AMS recognizes that international standards and foreign buyer requirements can change over time.

Two voluntary consensus standards bodies transmitted draft standards to AMS for consideration as examples of the types of standards AMS would inspect and certify to. These voluntary consensus standards bodies were the Technical Committee for Underwriters Laboratories 2128—the Standard for Meat and Poultry Plant Equipment (Underwriters Laboratories, North Brook, Illinois) and the NSF/3–A Joint Committee on Food Processing Equipment (a group jointly administered by NSF International (formerly the National Sanitation Foundation), Ann Arbor, Michigan, and the 3–A Sanitary Standards Committees, a standards development group supported by the International Association of Food Industry Suppliers, McLean, Virginia).

One group representing a consortium of equipment manufacturing associations submitted a draft standard to AMS for consideration as a basis for a standard AMS would develop and use as a government-unique standard. Additionally, several commenters stated AMS should apply the guidelines used by FSIS in its former Equipment Acceptance Program as a government-unique standard.

When considering the comments pertaining to the selection of standards for AMS to inspect and certify to, careful attention was paid to Circular A–119 of the Office of Management and Budget; Federal Participation in the Development and Use of Voluntary Consensus Standards and in Conformity Assessment Activities (63 FR 8546). Circular A–119 directs Federal agencies to use voluntary consensus standards in regulatory activities in lieu of government-unique standards except where inconsistent with law or otherwise impractical.

Voluntary consensus standards bodies are defined by Circular A–119 as domestic or international organizations which plan, develop, establish, or coordinate voluntary consensus standards using agreed-upon procedures. A voluntary consensus standards body is further defined by the following attributes: (1) Openness, (2) balance of interest, (3) due process, (4) an appeals process, and (5) consensus.

Other types of standards, which are distinct from voluntary consensus standards, include: (1) Industry standards which are developed by the private sector but not in the full consensus process, (2) government unique standards which are developed by the government for its own uses, and (3) standards mandated by law.

After reviewing the comments received, AMS believes that two standards presented by voluntary consensus standards bodies are consistent with Circular A–119. Standards presented or supported by other commenters, including the FSIS guidelines and the request that AMS develop its own standard were not further pursued. Further, after considering the comments received, AMS concluded that there is more support for standards developed by the NSF/3–A Joint Committee on Food Processing Equipment than those developed by the Technical Committee for Underwriters Laboratories 2128—the Standard for Meat and Poultry Plant Equipment. Also, commenters stated that the NSF/3–A Joint Committee on Food Processing Equipment maintained better participation and consensus, and developed standards that contain more fully developed criteria necessary for AMS to use in providing an inspection and certification program. AMS also has extensive experience in working with the voluntary consensus standards for equipment used to process dairy products that are developed by the 3–A Sanitary Standards Committees through the AMS Dairy Equipment Acceptance Program.

Therefore, AMS is proposing to inspect and certify equipment and utensils to standards developed by the NSF/3–A Joint Committee on Food Processing Equipment. This group submitted a proposed generic standard titled NSF/3–A 14159–1, ''Hygiene Requirements for the Design of Meat and Poultry Processing Equipment.''

AMS believes the selection of standards developed by the NSF/3–A Joint Committee on Food Processing Equipment best meet the stated objectives commenters submitted to the Agency for it to use to select a standard. AMS believes the broad-based representation on the NSF/3–A Joint Committee on Food Processing Equipment will ensure the development of standards that are compatible with applicable FSIS regulations that apply to federally inspected meat and poultry packing and processing establishments, current industry practices, transparent and objective requirements, and be able to be revised over time.

The standards developed by the NSF/3–A Joint Committee on Food Processing Equipment, which AMS proposes to adopt as the basis for the certification program, would establish minimum hygienic design requirements. The requirements are to be applied by designers and manufacturers of equipment and utensils. The standards will incorporate the following features.

—A scope that clearly defines the intended limits and application of the standards;

—Normative references to other national or international standards that are germane to the scope of the standards;
—Definitions to define the terms used within the standards;
—A listing of potential hazards that may arise;
—Hygiene requirements including strategies used by the manufacturer to identify hygiene measures, risk assessment, materials of construction, design and fabrication requirements for product contact and non-product contact surfaces; and
—Information to the users.

One commenter stated that any sanitary standard adopted by AMS should allow all of the options for establishing that equipment, utensils and their components have a satisfactory regulatory status for materials of construction under the laws and regulations administered by the Food and Drug Administration (FDA). The objective of this program is to offer a voluntary, user-fee funded service to provide a third-party assurance that equipment and utensils meet the requirements of a voluntary consensus standard. Because the objective requirements of the standard itself are developed and maintained by the NSF/3–A Joint Committee on Food Processing Equipment, the commenter's concerns pertaining to FDA compliance of food-contact materials are more appropriately directed to the NSF/3–A Joint Committee.

The Proposed Regulation

The equipment and utensil inspection and certification proposed herein would be conducted by AMS on a voluntary, fee-for-service basis. Manufacturers of new, modified, or reconditioned equipment and utensils designed to process livestock and poultry products who want to have the equipment and utensils they manufacture officially inspected and accepted by AMS as meeting the NSF/3–A standards which outline minimum requirements for cleanability, suitability of materials used in construction, inspectability and durability would apply to AMS. Copies of the NSF/3–A standards may be obtained by contacting the NSF/3–A Joint Committee on Food Processing Equipment at: 3475 Plymouth Road, Ann Arbor, Michigan 48105, Phone (734) 769–9060 or Fax (734) 769–9064. AMS will also have copies of the NSF/3–A standards available for inspection at: USDA, AMS Dairy Programs, 1400 Independence Ave, SW, Washington, DC 20250, Phone (202) 720–3171 or Fax (202) 720–2643.

To have equipment and utensils accepted under this program, equipment and utensil manufacturers would submit an application to AMS requesting evaluation of equipment and utensils. Manufacturers would apply by submitting an application and be required to indicate whether the evaluation is to be performed on a prototype, manufactured equipment and utensils, or drawing and materials list. AMS does not require the drawings, blueprints and a material list, however such blueprints and lists are encouraged as they may facilitate evaluation of equipment complex in design against the standard. It may be necessary for AMS to conduct an on-site review of the actual equipment at the point of fabrication or installed and operating in an establishment to fully evaluate the design and construction and execute final acceptance.

The cost for evaluation of equipment or utensils would depend on the complexity of design, location of the equipment or utensil to be evaluated on-site, and whether the manufacturer has provided resource materials that would facilitate inspection of the equipment or utensils by AMS to determine acceptance. Collectively, AMS estimates the average total costs to process and in-plant review a piece of equipment or a utensil to be $1,120 plus added travel costs for the required on-site review. Assuming all equipment and utensil manufacturers would use an AMS equipment and utensil certification program to the extent they used the FSIS program, it is estimated that the total cost to the industry under an AMS program would be about $2,800,000 plus travel costs for on-site reviews annually.

Manufacturers whose equipment and utensils receive AMS acceptance may, upon request, be issued an official certificate as proof that the equipment or utensil meets NSF/3–A standards and is therefore accepted. Upon written application, manufacturers of accepted equipment and utensils may receive permission to display the official mark of acceptance on equipment and utensils or in promotional literature as illustrated in the regulatory text (Figure 1).

Manufacturers whose equipment or utensil does not meet the design and fabrication requirements of the NSF/3–A standards and does not receive acceptance by AMS may appeal AMS' determination. The manufacturers would make a request for appeal service with the Chief, Dairy Grading Branch by completing and submitting a request for service to have equipment or utensils reevaluated. The appeal process is set forth in § 54.1020 through 54.1027 of the proposed regulations.

Any manufacturer whose equipment or utensil has been accepted shall resubmit the design and fabrication details of the accepted equipment or utensils whenever a change of design or fabrication has occurred. Acceptance of equipment or utensils that have not changed remains in effect for a period of four years. If no changes in equipment or utensil design or fabrication have occurred over the four year period since the last acceptance was made, manufacturers must submit a certificate of conformance signed by the chief engineering officer and chief executive officer of the company stating that no design changes have been made to receive acceptance renewal.

As was stated in the May 10, 1999, AMS News Release, this proposed equipment and utensil certification program will be operated by the AMS Dairy Programs. This decision was made because the AMS Dairy Programs has extensive technical expertise and many years of experience in working with domestic and international standards organizations and equipment manufacturers for the acceptance of dairy processing equipment.

Executive Order 12866 and the Regulatory Flexibility Act

This proposed rule has been reviewed under Executive Order 12866. The rule has been determined to be not significant for the purposes of Executive Order 12866 and, therefore, has not been reviewed by the Office of Management and Budget.

Pursuant to the requirements set forth in the Regulatory Flexibility Act (RFA) (5 U.S.C. 601 *et seq.*), AMS has considered the economic impact of this proposed rule on small entities. The purpose of the RFA is to fit regulatory actions to the scale of businesses subject to such action so that small businesses would not be disproportionally burdened. Accordingly, we have prepared an initial regulatory flexibility analysis.

Development of this proposed program was authorized by the 1999 Agricultural Appropriations Bill (Pub. L. 105–277, sec. 747) and under the authority of the Agricultural Marketing Act of 1946 (AMA) (7 U.S.C. 1621–1627).

AMS is proposing to conduct a voluntary, user-fee funded inspection and certification program for equipment and utensils that are used to process livestock and poultry products that is similar to the inspection and certification of agricultural products under the AMA. Under this proposed program, manufacturers of new, modified, or reconditioned equipment

and utensils designed to process livestock and poultry products who want to have the equipment and utensils they manufacture officially inspected and accepted by AMS as meeting the NSF/3–A standards which outline minimum requirements for cleanability, suitability of materials used in construction, inspectability and durability would apply to AMS.

Alternatively, AMS could establish through rulemaking a process to approve private parties who could then perform inspection and acceptance on behalf of AMS. However it was determined that in complying with the authorizing legislation for this program which requires the Secretary to develop a program to inspect and certify agricultural processing equipment, and impose a fee for the inspection and certification, in a manner similar to the inspection and certification of agricultural products under the Agricultural Marketing Act of 1946, AMS would administer this proposed program by using government employees.

Additionally, AMS considered proposing alternative standards as the basis of its inspection and certification program. However, AMS believes that the standards proposed herein represent the best alternative taking into account the program's requirements.

Under this proposed equipment and utensil acceptance program, equipment and utensil manufacturers seeking AMS acceptance and certification would apply to AMS for an evaluation of their equipment and utensils. Although AMS does not require the drawings, blueprints and a material list upon application, AMS encourages applicants to submit such blueprints and lists to facilitate evaluation of complex equipment and utensils. Additionally, some equipment and utensils will require AMS to conduct an on-site review at the point of fabrication or installed and operating in an establishment to fully evaluate the design and construction and execute final acceptance.

To maintain acceptance and certification, these regulations would require any manufacturer whose equipment or utensil has been accepted to resubmit the design and fabrication details of the accepted equipment or utensils whenever a change of design or fabrication occurs. Barring changes in equipment or utensil design and fabrication, acceptance is granted for a four year period. When equipment or utensil acceptance nears expiration at the end of the four year period, manufacturers may send a letter stating that no design changes have been made to receive an additional four year acceptance renewal.

This action will benefit manufacturers of equipment and utensils used for processing meat and poultry products and the purchasers of such equipment and utensils by providing AMS certification that the equipment and utensils meet the minimum requirements of voluntary consensus standards for sanitary design. Acceptance by AMS will provide manufacturers and buyers assurance that equipment and utensils can be cleaned, are constructed of suitable materials, are durable, and can be inspected.

This proposed equipment and utensil inspection and certification program affects manufacturers or other vendors of equipment and utensils. The equipment and utensil manufacturers range in size from small to large concerns. According to the Standard Industrial Classification (SIC) (13 CFR 121.201) which are used by the Small Business Administration to identify small businesses, a small business equipment and utensil manufacturer is defined a firm with less than 500 employees (SIC Division D. Major Group 20). According to the most complete data available to AMS, it is estimated that there are about 2000 equipment and utensil manufacturers, about 90 percent of these can be classified as small entities.

Previously, FSIS maintained a mandatory prior approval program for equipment and utensil inspection as a prerequisite for use in Federally inspected meat and poultry packing and processing establishments that affected these same entities. Under FSIS' former mandatory prior approval program for equipment, an estimated 2,500 applications for equipment approval were received each year. Evaluation and certification of equipment and utensils is based on the complexity and sophistication of the design and fabrication of the equipment or utensil being evaluated.

The paperwork burden that may be imposed on equipment and utensil manufacturers by this proposed action is further discussed in the section entitled Paperwork Reduction Act that follows.

In addition, we have not identified any relevant Federal rules that are currently in effect that duplicate, overlap, or conflict with this rule. Further, as discussed below, this program will be operated by the AMS Dairy Programs using its relevant fee structure.

The 1999 Agricultural Appropriations Bill directed the Secretary of Agriculture to develop this inspection and certification program for equipment used to process livestock and poultry products in a manner similar to other inspection and certification programs administered by AMS under the authority of the Agricultural Marketing Act of 1946. Under the Agricultural Marketing Act of 1946, AMS is required to collect reasonable fees for providing official services provided under this proposed equipment and utensil certification program, to cover as nearly as practicable AMS costs for performing the service including related administrative and supervisory costs. Since the procedures used to inspect and certify equipment and utensils used to process livestock and poultry products are similar to those used to inspect and certify dairy processing equipment, AMS has decided to charge the same hourly fees for inspecting and certifying equipment used to process livestock and poultry products. Inspection and certification services are based on the hourly rate for applicants who request services on an hourly basis and appear at 7 CFR part 58 as published in the **Federal Register** at 62 FR 66258 on December 18, 1997. The current base hourly rate for such service is $56 per hour for service performed between 6:00 a.m. and 6:00 p.m. and $61.60 for service performed between 6:00 p.m. and 6:00 a.m., for the time required to perform the service calculated to the nearest 15-minute period, including the time required for preparation of certificates and reports and the travel time of the equipment review specialist in connection with the performance of the service. A minimum charge of one-half hour will be made for the service pursuant to each request or certificate issued. If an applicant requests that certification service be performed on a holiday, Saturday, or Sunday or in excess of each 8-hour shift Monday through Friday, the applicant would be charged such service at a rate of 1½ times the rate which would be applicable for such service if performed during normal working hours.

AMS estimates that the time required to review and accept an initial submission for simple designs would be 1 hour. For complex designs, AMS estimates that the time required to review and accept an initial submission would be 8 hours. Based on the proposed AMS base hourly fee for service of $56 per hour, an initial submission of assembly type drawings and corresponding parts and material lists should range from $56 to $448. However, the final cost for equipment or utensil inspection and certification

would be contingent on a final on-site review of the equipment or utensil at the point of fabrication or under conditions of actual use. The cost of this on-site review would include associated travel and per diem costs in addition to the hourly fee for service. AMS estimates the average time to perform a on-site review for a piece of equipment or utensil to be 12 hours.

The cost for evaluation of equipment or utensils would depend on the complexity of design, location of the equipment or utensil to be evaluated on-site, and whether the manufacturer has provided resource materials that would facilitate inspection of the equipment or utensil by AMS to determine acceptance. AMS estimates the average total costs to process and in-plant review a piece of equipment or utensil to be $1,120 plus added travel costs for the required on-site review. Assuming all equipment and utensil manufacturers would use an AMS equipment and utensil certification program to the extent they used the FSIS program, it is estimated that the total cost to the industry under an AMS program would be about $2,800,000 plus travel costs for on-site reviews annually. Since approximately 90 percent of equipment and utensil manufacturers are small businesses, the estimated share of the total annual industry burden directly affecting small businesses would be $2,520,000.

In assessing alternatives to the scheme provided for in these proposed regulations, we believe that the provisions contained herein would best accomplish its purpose and at the same time minimize any burden that might be placed upon affected parties. Nonetheless, we invite comments concerning the potential effects of this proposed regulation on affected parties, including more information on the benefits or burden that small entities may incur as a result of implementation of this proposal.

Executive Order 12988

This rule has been reviewed under Executive Order 12988, Civil Justice Reform and is not intended to have a retroactive effect. This rule would not preempt any State or local laws, regulations, or policies, unless they present an irreconcilable conflict with this rule. Further, section 747 of the 1999 Agricultural Appropriations Bill states that the provision does not affect the authority of the Secretary to carry out the Federal Meat Inspection Act (21 U.S.C. 601 *et seq.*); the Poultry Products Inspection Act (21 U.S.C. 451 *et seq.*); or the Egg Products Inspection Act (21 U.S.C. 1031 *et seq.*). There are no administrative procedures that must be exhausted prior to any judicial challenge to the provisions of this proposed rule.

Paperwork Reduction Act Requirements

This proposed rule contains paperwork submission requirements that are subject to public comment and to review by the Office of Management and Budget under the Paperwork Reduction Act of 1995 (PRA) (44 U.S.C. Chapter 35). In accordance with 5 CFR part 1320, we included the description of the reporting requirements and an estimate of the annual burden on manufacturers of equipment and utensils used to process livestock and poultry products. As identified in § 54.1004 of these proposed regulations, the Certification of Sanitary Design and Fabrication of Equipment Used in the Slaughter, Processing, and Packaging of Livestock and Poultry Products service would be administered by the Dairy Programs of AMS. During the administration of the service, Dairy Programs will expand the use of existing Dairy Programs forms currently approved by OMB under 7 CFR part 58, subpart A, Regulations Governing the Inspection and Grading of Manufactured or Processed Dairy Products. The Agency published a **Federal Register** Notice 65 FR 2370, dated January 14, 2000, that expanded the use of these forms and allowed for a 60-day comment period. The following is provided in this proposed action to allow for an additional opportunity for public comment on the specified burden that would be placed on those entities affected by this rule.

OMB Number: 0581–0126.

Expiration Date of Approval: July 31, 2001.

Abstract: The dairy grading program is a voluntary, user-fee funded program. In order for a voluntary inspection program to perform satisfactorily with a minimum of confusion, there must be written requirements and rules for both Government and industry. The information collections are essential to carry out and administer the inspection and grading program. The information requested is used to identify the product offered for grading, to identify a request from an equipment manufacturer of equipment used in the dairy, meat or poultry industries for evaluation for sanitary design and construction, to identify and contact the party responsible for payment of the inspection, grading or equipment evaluation fee and expense, to identify applicants who wish to be authorized for the display of official identification on product packaging materials, equipment, utensils, or on descriptive or promotional materials.

The equipment and utensil inspection and certification proposed herein would use the forms described above in a program that would be conducted by AMS on a voluntary, fee-for-service basis. Manufacturers of new, modified, or reconditioned equipment and utensils designed to process livestock and poultry products who want to have the equipment or utensils they manufacture officially inspected and accepted by AMS as meeting the NSF/3–A standards which outline minimum requirements for cleanability, suitability of materials used in construction, inspectability and durability would apply to AMS.

For the purposes of this burden estimate, AMS estimates that the hourly wage for those submitting information would be $20 per hour. To have equipment and utensils accepted under this program, equipment and utensil manufacturers would submit an application to AMS requesting evaluation of equipment or utensils (Form DA–162). AMS estimates that of the 2000 livestock and poultry equipment and utensil manufacturers, AMS will receive approximately 2500 applications per year or, on average, 1.25 applications from each manufacturer. Form DA–162 requires 0.038 hours to complete. The total annual burden on the industry for this proposed collection of information would be 95 hours or $1,900 annually. Since AMS does not require the drawings, blueprints and a material list to be submitted, they have not been included in this burden estimate.

Manufacturers whose equipment or utensil receives AMS acceptance may, upon request, be issued an official certificate as proof that the equipment or utensil meets NSF/3–A standards and is therefore accepted. Since completion of this certificate is performed by AMS, it has also not been included in this burden estimate. Upon written application (Form DA–155 and Form DA–156), manufacturers of accepted equipment or utensils may receive permission to display the official mark of acceptance on equipment and utensils, or in promotional literature as illustrated in the regulatory text (Figure 1). Form DA–155 is a one-time application from each manufacturer, and therefore has been estimated to only be sent by a respondent once in every four-year cycle of equipment and utensil approval. The estimate of the total annual burden of this collection of information is 10.5 hours or $210 annually. Form DA–156 is submitted by

a manufacturer each time there is a request to use the symbol on a piece of equipment or utensil, or in promotional literature. AMS estimates that it would receive one request each year to use the symbol on equipment or utensils, or in promotional material for each piece of equipment or utensil accepted. Therefore, AMS estimates that the total annual burden for this collection of information would be 42.5 hours or $850 annually.

Manufacturers whose equipment or utensil does not meet the design and fabrication requirements of the NSF/3–A standards and does not receive acceptance by AMS may appeal AMS' determination. The manufacturers would make a request for appeal service with the Chief, Dairy Grading Branch by completing and submitting a request for service (Form DA–162) to have equipment or utensils reevaluated. The appeal process is set forth in sections § 54.1020 through § 54.1027 of the proposed regulations. As the AMS Dairy Program has never received an appeal for service under its current equipment acceptance program, AMS has estimated that 1% of applicants will appeal service in this estimate of the burden of the collection of information. Accordingly, with 2500 applications per year and Form DA–162 requiring 0.038 hours to complete and an estimate of only 1 percent of applicants requiring an appeal, the total annual burden on the industry for this proposed collection of information would be 0.95 hours or $19 annually.

Any manufacturer whose equipment or utensil has been certified shall resubmit the design and fabrication details of the certified equipment or utensil whenever a change of design or fabrication has occurred. Certification of equipment or utensils that have not changed remains in effect for a period of four years. If no changes in equipment or utensil design or fabrication have occurred over the four year period since the last certification was made, manufacturers must submit a certificate of conformance signed by the chief engineering officer and chief executive officer of the company stating that no design changes have been made to receive certification renewal. AMS estimates that it would receive one such request every four years for each piece of equipment or utensil accepted. AMS estimates that the total annual burden for this collection of information would be 52 hours or $1,040 annually.

Collectively, AMS estimates that the total annual burden for the collection of information would be 200.95 hours or $4019 annually.

1. Equipment Review Request—Form DA–162.

Estimate of Burden: Public reporting burden for this collection of information is estimated to average 0.038 hours per response.

Respondents: Manufacturers of equipment and utensils used to process livestock and poultry products.

Estimated Number of Respondents: 2000.

Estimated Number of Responses per Respondent: 1.25.

Estimated Total Annual Burden on Respondents: 95 hours.

Total Cost: $1,900.

2. Application to use official ID—Form DA–155.

Estimate of Burden: Public reporting burden for this collection of information is estimated to average 0.021 hours per response.

Estimated number of respondents: 2000.

Estimated Number of Responses per Respondent: 0.250.

Estimated Total Annual Burden on Respondents: 10.5 hours.

Total Cost: $210.

3. Request to Display Official ID—Form DA–156.

Estimate of Burden: Public reporting burden for this collection of information is estimated to average 0.017 hours per response.

Estimated number of respondents: 2000.

Estimated Number of Responses per Respondent: 1.25.

Estimated Total Annual Burden on Respondents: 42.5 hours.

Total Cost: $850.

4. Appeal—Equipment Review Request—Form DA–162.

Estimate of Burden: Public reporting burden for this collection of information is estimated to average 0.038 hours per response.

Respondents: Manufacturers of equipment and utensils used to process livestock and poultry products.

Estimated Number of Respondents: 2000.

Estimated Number of Responses per Respondent: 0.0125.

Estimated Total Annual Burden on Respondents: 0.95 hours.

Total Cost: $19.

5. Letter requesting renewal of acceptance.

Estimate of Burden: Public reporting burden for this collection of information is estimated to average 0.083 hours per response.

Estimated number of respondents: 2000.

Estimated Number of Responses per Respondent: 0.313.

Estimated Total Annual Burden on Respondents: 52 hours.

Total Cost: $1,040.

Estimated Total Annual Burden on Respondents: 200.95 hours total or 0.1 hours per respondent.

Estimated Total Annual Costs: $4,019 or $2 per respondent.

AMS is soliciting comments from all interested parties concerning the information collection requirements contained in this proposed rule. Comments are specifically invited on the following: (1) The accuracy of the agency's burden estimate of the proposed collection of information including the validity of the methodology and assumptions used; (2) ways to minimize the burden of the collection of information on those who would respond, including through the use of appropriate electronic collection methods; (3) whether the proposed collection of information is sufficient or necessary for the proper performance of the functions of the agency to perform this program; and (4) ways to enhance the quality, utility, and clarity of the information to be collected.

Send two copies of comments concerning the collection requirements of this proposed rule to Barry L. Carpenter, Deputy Administrator, Livestock and Seed Program, Docket No. LS–99–12, Room 2092 South Agriculture Building, 1400 Independence Ave., SW, Washington, DC 20250–0249.

All comments received in response to this notice will be considered part of the public record and will be available for viewing in Room 2092 South Agriculture Building, 1400 Independence Ave., SW, Washington, DC 20250–0249 between 8:30 a.m. and 4:30 p.m., Monday through Friday.

Comments concerning the information collection under the PRA should also be sent to the Desk Officer for Agriculture, Office of Information and Regulatory Affairs, Office of Management and Budget, Washington, DC 20503.

List of Subjects in 7 CFR Part 54

Food grades and standards, Food labeling, Meat and meat products.

For the reasons set forth in the preamble 7 CFR part 54 is proposed to be amended as follows:

PART 54—MEATS, PREPARED MEATS, AND MEAT PRODUCTS (GRADING, CERTIFICATION, AND STANDARDS)

1. The authority citation for part 54 is revised to read as follows:

Authority: 7 U.S.C. 1621–1627; Pub. L. 105–277, sec. 747)

2. In part 54 a new subpart C consisting of §§ 54.1001 through 54.1034 is added to read as follows:

Subpart C—Regulations Governing the Certification of Sanitary Design and Fabrication of Equipment Used in the Slaughter, Processing, and Packaging of Livestock and Poultry Products

Sec.
54.1001 Meaning of words.
54.1002 Terms defined.
54.1003 Designation of official certificates, memoranda, marks, and other identifications for purposes of the Agricultural Marketing Act of 1946.
54.1004 Administration and implementation.
54.1005 Basis of service.
54.1006 Kind of service.
54.1007 Availability of service.
54.1008 How to obtain service.
54.1009 Order of furnishing service.
54.1010 When request for service deemed made.
54.1011 Withdrawal of application or request for service.
54.1012 Authority of agent.
54.1013 When an application may be rejected.
54.1014 Accessibility of equipment and utensils; access to establishments.
54.1015 Official reports, forms, and certificates.
54.1016 Advance information concerning service rendered.
54.1017 Authority to use official identification.
54.1018 Form of official identification and approval for use.
54.1019 Renewal of Acceptance Certification.
54.1020 Appeal service; marking products or appeal; requirements for appeal; certain determinations not appealable.
54.1021 Request for appeal service.
54.1022 When request for appeal service may be withdrawn.
54.1023 Denial or withdrawal of appeal service.
54.1024 Who shall perform appeal service.
54.1025 Appeal reports.
54.1026 Superseded reports.
54.1027 Application of other regulations to appeal service.
54.1028 Fees and other charges for service.
54.1029 Payment of fees and other charges.
54.1030 Identification.
54.1031 Errors in service.
54.1032 Denial or withdrawal of service.
54.1033 Confidential treatment.
54.1034 OMB control numbers assigned pursuant to the Paperwork Reduction Act.

Subpart C—Regulations Governing the Certification of Sanitary Design and Fabrication of Equipment Used in the Slaughter, Processing, and Packaging of Livestock and Poultry Products

§ 54.1001 Meaning of words.

For the purposes of the regulations in this subpart, words in the singular form shall be deemed to impart the plural and vice versa, as the case may demand.

§ 54.1002 Terms defined.

Act. The Agricultural Marketing Act of 1946, as amended (7 U.S.C. 1621–1627).

Administrator. The Administrator of the Agricultural Marketing Service (AMS), United States Department of Agriculture, or the representative to whom authority has been delegated to act in the stead of the Administrator.

Agricultural Marketing Service (AMS). The Agricultural Marketing Service of the United States Department of Agriculture.

Applicant. Any person who applies for service under the regulations in this subpart.

Branch. The Dairy Grading Branch, Dairy Programs, Agricultural Marketing Service.

Chief. The Chief of the Dairy Grading Branch, Dairy Programs, Agricultural Marketing Service, or the representative to whom authority has been delegated to act in the stead of the Chief.

Compliance. Conformity of a processing system, piece of processing equipment, or a utensil to identified specifications or standards.

Department. The United States Department of Agriculture.

Deputy Administrator. The Deputy Administrator of the Dairy Programs of the Agricultural Marketing Service or any officer or employee of the Dairy Programs to whom authority has heretofore been delegated, or to whom authority may hereafter be delegated to act in the stead of the Deputy Administrator.

Design Review Specialist. An employee of the Branch to determine and certify or otherwise evaluate the compliance of equipment or utensils under the regulations.

Design Evaluation and Certification Service. The service established and conducted under the regulations for the evaluation and certification or other identification of the compliance of equipment or utensils used for the slaughter, processing or packaging of livestock and poultry products (Referred to hereinafter as ''equipment'' or ''utensils'') with sanitary specifications or standards.

Fabricator. Commercial entity engaged in the manufacture or assembly of equipment or utensils.

Financially interested person. Any person having a financial interest in the equipment or utensils involved, including but not limited to the designer, fabricator, or user of the equipment or utensils.

Legal Holiday. Those days designated as legal public holidays in Title 5, United States Code, section 6103(a).

Person. Any individual, partnership, corporation, or other legal entity, or Government agency.

Processing. Cooking, baking, curing, heating, drying, mixing, grinding, churning, separating, extracting, cutting, fermenting, eviscerating, preserving, dehydrating, freezing, or otherwise manufacturing, and includes the packaging, canning, jarring, or otherwise enclosing in a container.

Program. The Dairy Programs of the Agricultural Marketing Service.

Standards. The most recent version of standards for equipment and utensils formulated by the NSF/3–A Joint Committee on Food Processing Equipment (Referred to hereinafter as ''NSF/3–A'').

The regulations. The regulations in this Subpart.

§ 54.1003 Designation of official certificates, memoranda, marks, and other identifications, for purposes of the Agricultural Marketing Act of 1946.

Subsection 203(h) of the Agricultural Marketing Act of 1946, as amended provides criminal penalties for various specified offenses relating to official certificates, memoranda, and marks or other identifications, issued or authorized under section 203 of said Act, and certain misrepresentations concerning the inspection or grading of agricultural products under said section. For the purposes of said subsection and the provisions in this subpart, the terms listed in paragraphs (a) through (c) of this section shall have the respective meanings specified:

(a) *Official certificate* means any form of certification, either written or printed, used under the regulations to certify with respect to the evaluation, review, condition, or acceptance of equipment or utensils (including the compliance of equipment or utensils with applicable standards).

(b) *Official memorandum* means any initial record of findings made by an authorized employee of the Dairy Grading Branch in the process of determining compliance, evaluating, or reviewing equipment or utensils pursuant to the regulations, any processing or in plant-operation report made by an authorized Dairy Grading Branch employee in connection with determining compliance, evaluating, or reviewing equipment or utensils under the regulations, and any report made by an authorized employee of the Dairy Grading Branch of any other services performed pursuant to the regulations.

(c) *Official mark* or *other official identification* means any form of mark

or other identification, including those prescribed in § 54.1018; used under the regulations in marking any equipment or utensils or displayed as an indication that the equipment or utensils has been evaluated by AMS (including the compliance of the equipment or utensils with applicable standards).

§ 54.1004 Administration and implementation.

The Administrator designates the administration and implementation of the Certification of Sanitary Design and Fabrication of Equipment Used in the Slaughter, Processing, and Packaging of Livestock and Poultry Products service to the Dairy Grading Branch, Dairy Programs, Agricultural Marketing Service. The Chief is charged with the administration, under the general supervision and direction of the Deputy Administrator, of the regulations and the Act insofar as they relate to equipment or utensils used to process livestock and poultry products.

§ 54.1005 Basis of service.

(a) Certification of Sanitary Design and Fabrication of Equipment Used in the Slaughter, Processing, and Packaging of Livestock and Poultry Products service shall be performed in accordance with the provisions of this subpart, the instructions, guidelines and procedures issued or approved by the Chief and the applicable standards developed by the NSF/3–A.

(b) Copies of standards developed by NSF/3–A that AMS will inspect and certify to are available, for a nominal fee, from NSF International, 3475 Plymouth Road, Ann Arbor, MI 48105; www.nsf.org; Phone (800) 673–6275; Fax (734) 769–9064. Copies of all other instructions, guidelines and procedures can be obtained from, and copies of standards developed by NSF/3–A may be inspected at, the U.S. Department of Agriculture, Agricultural Marketing Service, Dairy Programs, Dairy Grading Branch; Room 2750–S; 1400 Independence Ave., SW., Washington, DC 20250–6456.

(c) All services provided in accordance with the regulations shall be rendered without discrimination on the basis of race, color, national origin, gender, religion, age, disability, political beliefs, sexual orientation, or marital or family status.

§ 54.1006 Kind of service.

Certification of Sanitary Design and Fabrication of Equipment Used in the Slaughter, Processing, and Packaging of Livestock and Poultry Products service under the regulations shall consist of the evaluation, certification and/or identification, upon request by the applicant, of the adherence of the design and fabrication of equipment and utensils to sanitary principles and criteria under applicable standards identified in this subpart. Determination as to equipment or utensils compliance with standards for materials of fabrication or method of fabrication may be based upon information received from the fabricator.

§ 54.1007 Availability of service.

Service under these regulations may be made available to the designers, fabricators, users, or other interested person or party, of the equipment or utensils. Subject to the provisions of this subpart, services shall be performed only when a qualified design review specialist is available, and when the location of the equipment or utensils, evaluation facilities and conditions, as determined by the Chief, are suitable for conducting such service.

§ 54.1008 How to obtain service.

(a) *Application.* Any person may apply to the Chief for service under the regulations with respect to equipment or utensils in which the applicant is financially interested. The application shall be made on a form approved by the Chief. In any case in which the service is intended to be furnished at an establishment not operated by the applicant, the applicant shall be responsible for obtaining approval for accessibility of the equipment or utensil from the operator of such establishment and such approval shall constitute an authorization for any employees of the Department to enter the establishment for the purpose of performing their functions under the regulations. The application shall state:

(1) The name and address of the establishment at which service is desired;

(2) The name and post office address of the applicant;

(3) Identification of the party that will be responsible for payment of all services rendered in response to the request;

(4) The type of equipment or utensil presented for evaluation;

(5) The date(s) on which service is requested to be performed; and

(6) The signature of the applicant (or the signature and title of the applicant's representative) and date of the request.

(b) *Notice of eligibility for service.* The applicant for service will be notified whether the applicant's application is approved.

§ 54.1009 Order of furnishing service.

Service under the regulations shall be furnished to applicants, insofar as practicable and subject to the availability of qualified design review specialist, in the order in which requests therefor are received, insofar as consistent with good management, efficiency and economy. Precedence will be given, when necessary, to requests made by any government agency and to requests for appeal service under § 54.1021.

§ 54.1010 When request for service deemed made.

A request for service under the regulations shall be deemed to be made when received by the Branch. Records showing the date and time of the request shall be maintained.

§ 54.1011 Withdrawal of application or request for service.

An application or a request for service under the regulations may be withdrawn by the applicant at any time before the application is approved or prior to performance of service. The applicant shall be responsible for payment, in accordance with §§ 54.1028 and 54.1029, of any expenses already incurred by the Agricultural Marketing Service in connection therewith.

§ 54.1012 Authority of agent.

Proof of the authority of any person making an application or a request for service under the regulations on behalf of any other person may be required at the discretion of the Deputy Administrator or Chief or other employee receiving the application or request under § 54.1008.

§ 54.1013 When an application may be rejected.

(a) An application or a request for service may be denied by the design review specialist, with the concurrence of the Deputy Administrator or Chief:

(1) For administrative reasons such as the non-availability of personnel to perform the service;

(2) In case the application or request relates to equipment or utensils which are not eligible for service under § 54.1006;

(3) The applicant fails to meet either the application requirements prescribed in this subpart or the conditions for receiving such service;

(4) The equipment or utensil is owned by, or located on the premises of, a person currently denied the benefits of the Act;

(5) The applicant has substantial financial ties to a person who is currently denied the benefits of the Act, or who has been adjudged, in an administrative or judicial proceeding, responsible in any way for a current

denial of benefits of the Act to any other person.

(6) The applicant is currently denied services under the Act.

(7) Any fees billed to the applicant are not paid within 30 days; or

(8) The applicant has failed to comply with the Act or this subpart or with the instructions, guidelines or procedures issued hereunder.

(b) The Chief shall provide notice to an applicant whose application is rejected, and shall explain the reason(s) for the rejection. If such notification is made verbally, written confirmation may be provided.

§ 54.1014 Accessibility of equipment and utensils; access to establishments.

(a) The applicant shall cause equipment and utensils to be made easily accessible for examination and to be so placed, with adequate illumination to facilitate evaluation for compliance. The applicant shall furnish or make available any necessary tools; such as boroscope, profilometer, disassembly tools, ladders, radius gauges, and the like; necessary to complete the evaluation.

(b) Supervisors of USDA design review specialists responsible for maintaining uniformity and accuracy of service under the regulations shall have access to all parts of establishments covered by approved applications for service under the regulations, for the purpose of examining all equipment or utensils in the establishments which have been or are to be evaluated for compliance with standards or which bear any marks of compliance.

§ 54.1015 Official reports, forms, and certificates.

(a) *Report.* The design review specialist shall prepare, sign, and issue a narrative report covering the observations, comments and recommendations based on the evaluation for conformance with standards of equipment and utensils as provided for in § 54.1005 and indicate the fees and other charges incurred for the services rendered.

(b) *Forms.* Form DA–161 is the official certificate for equipment or utensils evaluated and is accepted under the regulations. Issuance of this certificate is optional at the request of the applicant.

(c) *Distribution.* The original report and official certificate (if requested) shall be delivered or mailed to the applicant or other persons designated by the applicant. Other copies shall be forwarded as required by agency, program, and branch instructions. Additional copies will be furnished to any person financially interested in the equipment or utensil involved with the concurrence of the applicant and upon payment of fees, as provided in §§ 54.1028 and 54.1029.

§ 54.1016 Advance information concerning service rendered.

Upon request of any applicant, all or any part of the contents of any report issued to the applicant under the regulations, or other notification concerning the determination of compliance of equipment or utensils for such applicant may be transmitted by facsimile transmission to the applicant, or to any person designated by the applicant at the applicant's expense.

§ 54.1017 Authority to use official identification.

The Chief may authorize an applicant or any persons designated by the applicant to use the official identification symbol to mark equipment or utensils, or for display in descriptive or promotional materials providing the equipment or utensils is evaluated pursuant to this subpart and found to be in compliance.

§ 54.1018 Form of official identification and approval for use.

(a) The official identification symbol approved for use on equipment, utensils, or descriptive or promotional materials shall appear in the form and design shown in Figure 1.

(b) The official identification symbol on equipment or utensils shall be displayed by etching or the placement of a non-removable sticker located in close proximity to the equipment identification plate.

(c) The official identification symbol shall be sufficiently large to be identifiable and legible.

(d) The official identification symbol shall not be used in descriptive and promotional materials without prior approval by the Chief. The official identification symbol, if used, on the descriptive or promotional materials shall be printed as part of the text or format.

(e) An applicant shall submit to the Chief of the Dairy Grading Branch, Dairy Programs, Agricultural Marketing Service, U.S. Department of Agriculture, PO Box 96456, Washington, DC 20090–6456, an application, if one is not on file, requesting approval to use the official identification symbol on officially accepted equipment and in descriptive or promotional materials.

BILLING CODE 3410–02–P

Figure 1. Official identification symbol.

BILLING CODE 3410–02–C

§ 54.1019 Renewal of acceptance certification.

Any equipment and utensil which has been issued a report or certification stating acceptance of compliance, or approval to display official identification shall resubmit the design and fabrication details of the equipment or utensil whenever a change of design or fabrication has occurred but in no case longer than four years after the date of the most recent report stating acceptance of compliance. If no design or fabrication changes have been made, the applicant may submit a certificate of conformance signed by the chief engineering officer and the chief executive officer of the company stating that no design changes have been made to the specified equipment or utensil.

§ 54.1020 Appeal service; marking equipment or utensils on appeal; requirements for appeal; certain determinations not appealable.

(a) Appeal service is a re-evaluation of the compliance of a piece of equipment, portion of a piece of equipment, or utensil to design or fabrication criteria according to the standards prescribed by this subpart.

(b) Only the original applicant or their representative may request appeal service requesting a reevaluation on the original determination of the design and fabrication of the equipment or utensil for compliance with the standards specified in this subpart.

(c) Appeal service will not be furnished for:

(1) A piece of equipment, portion of a piece of equipment, or utensil which has been altered or has undergone a material change since the original service.

(2) For the purpose of obtaining an up-to-date report or certificate which does not involve a question as to the correctness of the original service for the piece of equipment, portion of a piece of equipment, or utensil.

§ 54.1021 Request for appeal service.

(a) Except as otherwise provided in § 54.1020, an applicant or other persons who have a financial interest in a piece of equipment, portion of a piece of equipment, or utensil under the regulations may request appeal service when the applicant or other persons who have a financial interest in a piece of equipment, portion of a piece of equipment, or utensil disagree with the determination as to compliance with the standard of the piece of equipment, portion of a piece of equipment, or utensil as documented in the applicable report.

(b) A request for appeal service shall be filed with the Chief, directly or through the design review specialist who performed the original service. The request shall state the reasons for the disagreement with the original determination and may be accompanied by a copy of any previous certificate or report, or any other information which the applicant may have received regarding the piece of equipment, portion of a piece of equipment, or utensil at the time of the original service. Such request may be made orally (including by telephone) or in writing (including by facsimile transmission). If made orally, the Dairy Grading Branch employee receiving the request may require that it be confirmed in writing.

§ 54.1022 When request for appeal service may be withdrawn.

A request for appeal service may be withdrawn by the applicant at any time before the appeal service has been performed, upon payment of any expenses already incurred under the regulations by the Branch in connection therewith.

§ 54.1023 Denial or withdrawal of appeal service.

A request for appeal service may be rejected or such service may be otherwise denied to or withdrawn from any person in accordance with the procedure set forth in § 54.1013(a), if it appears that the person or product involved is not eligible for appeal service under § 54.1020, or that the identity of the piece of equipment, portion of a piece of equipment, or utensil has been lost; or for any of the causes set forth in § 54.1013(a).

§ 54.1024 Who shall perform appeal service.

Appeal service for equipment or utensils shall be performed by the Chief or a design review specialist designated by the Chief. No design review specialist may perform appeal service for any piece of equipment, portion of a piece of equipment or utensil for which the original design review specialist performed the initial evaluation service.

§ 54.1025 Appeal reports.

After appeal service has been performed for any piece of equipment, portion of a piece of equipment or utensils, an official report shall be prepared, signed, and issued referring specifically to the original report and stating the determination of the re-evaluation of compliance of the piece of equipment, portion of a piece of equipment or utensil.

§ 54.1026 Superseded reports.

The appeal report shall supersede the original report which, thereupon, shall become null and void for that portion of the report pertaining to the appeal service and shall not thereafter be deemed to show the compliance of the equipment or utensils described therein. However, the fees charged for the original service shall not be remitted to the applicant who filed the appeal.

§ 54.1027 Application of other regulations to appeal service.

The regulations in § 54.1001 through 54.1019 and § 54.1028 through 54.1034 shall apply to appeal service except insofar as they are inapplicable.

§ 54.1028 Fees and other charges for service.

Fees and other charges equal as nearly as may be to the cost of the services rendered shall be assessed and collected from applicants in accordance with the provisions for Fees and Charges set forth in 7 CFR Part 58, Subpart A,—Regulations Governing the Inspection and Grading Services of Manufactured or Processed Dairy Products, § 58.38, § 58.39, § 58.41, § 58.42, and § 58.43, as appropriate.

§ 54.1029 Payment of fees and other charges.

Fees and other charges for service shall be paid upon receipt of billing for fees and other charges for service. The applicant shall remit by check, draft, or money order, made payable to the Agricultural Marketing Service, USDA, payment for the service in accordance with directions on the billing, and such fees and charges shall be paid in advance if required by the official design review specialist or other authorized official.

§ 54.1030 Identification.

All official design review specialists and supervisors shall have their Agricultural Marketing Service identification cards in their possession at all times while they are performing any function under the regulations and shall identify themselves by such cards upon request.

§ 54.1031 Errors in service.

When a design review specialist, supervisor, or other responsible employee of the Branch has evidence of inaccurate evaluation, or of incorrect certification or other incorrect determination or identification as to the compliance of a piece of equipment or utensil, such person shall report the matter to the Chief. The Chief will investigate the matter and, if deemed advisable, will report any material errors to the owner or the owner's agent. The Chief shall take appropriate action to correct errors found in the determination of compliance of equipment or utensils, and the Chief shall take adequate measures to prevent the recurrence of such errors.

§ 54.1032 Denial or withdrawal of service.

(a) *For misconduct—(1) Bases for denial or withdrawal.* An application or a request for service may be rejected, or the benefits of the service may be otherwise denied to, or withdrawn from, any person who, or whose employee or agent in the scope of the person's employment or agency:

(i) Has wilfully made any misrepresentation or has committed any other fraudulent or deceptive practice in connection with any application or request for service under the regulations;

(ii) Has given or attempted to give, as a loan or for any other purpose, any money, favor, or other thing of value, to any employee of the Department authorized to perform any function under the regulations;

(iii) Has interfered with or obstructed, or attempted to interfere with or to obstruct, any employee of the Department in the performance of duties under the regulations by intimidation, threats, assaults, abuse, or any other improper means;

(iv) Has knowingly falsely made, issued, altered, forged, or counterfeited any official certificate, memorandum, mark, or other identification;

(v) Has knowingly uttered, published, or used as true any such falsely made, issued, altered, forged, or counterfeited certificate, memorandum, mark or identification;

(vi) Has knowingly obtained or retained possession of any such falsely made, issued, altered, forged, or counterfeited certificate, memorandum, mark or identification, or of any equipment or utensil bearing any such

falsely made, issued, altered, forged, or counterfeited mark or identification;

(vii) Has applied the designation ''USDA Accepted Equipment'', ''AMS Accepted Equipment'', ''USDA Approved Equipment'', ''AMS Approved Equipment'', ''Approved By USDA'', ''Approved By AMS'', ''Accepted By USDA'', ''Accepted By AMS'', ''USDA Approved'', ''USDA Accepted'', ''AMS Approved'', ''AMS Accepted'', or any other variation of wording which states or implies official sanction by the United States Department of Agriculture by stamp, or brand directly on any equipment or utensil, or used as part of any promotional materials which has not been inspected and deemed in compliance with this subpart; or,

(viii) Has in any manner not specified in this paragraph violated subsection 203(h) of the AMA: *Provided*, That paragraph (a)(1)(vi) of this section shall not be deemed to be violated if the person in possession of any item mentioned therein notifies the Deputy Administrator or Chief without such delay that such person has possession of such item and, in the case of an official identification, surrenders it to the Chief, and, in the case of any other item, surrenders it to the Deputy Administrator or Chief or destroys it or brings it into compliance with the regulations by obliterating or removing the violative features under supervision of the Deputy Administrator or Chief: *And provided further*, That paragraphs (a)(1) (ii) through (vii) of this section shall not be deemed to be violated by any act committed by any person prior to the making of an application of service under the regulations by the principal person. An application or a request for service may be rejected or the benefits of the service may be otherwise denied to, or withdrawn from, any person who operates an establishment for which such person has made application for service if, with the knowledge of such operator, any other person conducting any operations in such establishment has committed any of the offenses specified in paragraphs (a)(1) (i) through (vii) of this section after such application was made. Moreover, an application or a request for service made in the name of a person otherwise eligible for service under the regulations may be rejected, or the benefits of the service may be otherwise denied to, or withdrawn from, such a person.

(A) In case the service is or would be performed at an establishment operated:

(*1*) By a corporation, partnership, or other person from whom the benefits of the service are currently being withheld under this paragraph, or

(*2*) By a corporation, partnership, or other person having an officer, director, partner, or substantial investor from whom the benefits of the service are currently being withheld and who has any authority with respect to the establishment where service is or would be performed; or

(B) In case the service is or would be performed with respect to any product in which any corporation, partnership, or other person within paragraph (a)(1)(viii)(A)(1) of this section has a contract or other financial interest.

(2) *Procedure.* All cases arising under this paragraph shall be conducted in accordance with the Rules of Practice Governing Formal Adjudicatory Proceedings Instituted by the Secretary Under Various Statutes set forth in 7 CFR §§ 1.130 through 1.151 and the Supplemental Rules of Practice in part 50, 7 CFR § 50.1 *et seq.*

(b) *Filing of records.* The final orders in formal proceedings under paragraph (a) of this section to deny or withdraw the service under the regulations (except orders required for good cause to be held confidential and not cited as precedents) and other records in such proceedings (except those required for good cause to be held confidential) shall be filed with the Hearing Clerk and shall be available for inspection by persons having a proper interest therein.

§ 54.1033 Confidential treatment.

Every design review specialist providing service under these regulations shall keep confidential all information secured and not disclose such information to any person except an authorized representative of the Department.

§ 54.1034 OMB control numbers assigned pursuant to the Paperwork Reduction Act.

The following control number has been assigned to the information collection requirements in 7 CFR Part 54, Subpart C, by the Office of Management and Budget pursuant to the Paperwork Reduction Act of 1995 (44 U.S.C. Chapter 35).

7 CFR section where requirements are described	Current OMB control No.
54.1008(a)	0581–0126
54.1017	0581–0126
54.1018(e)	0581–0126
54.1019	0581–0126
54.1020	0581–0126
54.1021	0581–0126

Dated: June 1, 2000.

Barry L. Carpenter,

Deputy Administrator, Livestock and Seed Program.

[FR Doc. 00–14113 Filed 6–5–00; 8:45 am]

BILLING CODE 3410–02–P

DEPARTMENT OF TRANSPORTATION

Federal Aviation Administration

14 CFR Part 39

[Docket No. 2000–SW–03–AD]

Airworthiness Directives; MD Helicopters, Inc. Model MD–900 Helicopters

AGENCY: Federal Aviation Administration, DOT.

ACTION: Notice of proposed rulemaking (NPRM).

SUMMARY: This document proposes the adoption of a new airworthiness directive (AD) for MD Helicopters, Inc. (MDHI) Model MD–900 helicopters. The AD would require modifying the non-rotating swashplate assembly and re-identifying it and the swashplate assembly with a new part number (P/N). The AD would also require creating a component history card or equivalent record to track the life of the newly identified non-rotating swashplate assembly and establishing a life limit of 1800 hours time-in-service (TIS). In addition, the AD would require inspecting and modifying, if necessary, the longitudinal drive link assembly. This proposal is prompted by reports of damage to the longitudinal drive link assembly caused by the sharp inner edge of the bushing in the non-rotating swashplate assembly. The actions specified by the proposed AD are intended to prevent damage to the longitudinal drive link, loss of control of the main rotor system, and subsequent loss of control of the helicopter.

DATES: Comments must be received on or before August 7, 2000.

ADDRESSES: Submit comments in triplicate to the Federal Aviation Administration (FAA), Office of the Regional Counsel, Southwest Region, Attention: Rules Docket No. 2000–SW–03–AD, 2601 Meacham Blvd., Room 663, Fort Worth, Texas 76137. You may also send comments electronically to the Rules Docket at the following address: 9-asw-adcomments@faa.gov. Comments may be inspected at the Office of the Regional Counsel between 9 a.m. and 3 p.m., Monday through Friday, except Federal holidays.

FOR FURTHER INFORMATION CONTACT: Greg DiLibero, Aviation Safety Engineer, FAA, Los Angeles Aircraft Certification Office, Airframe Branch, 3960 Paramount Blvd., Lakewood, California 90712, telephone (562) 627–5231, fax (562) 627–5210.

SUPPLEMENTARY INFORMATION:

Comments Invited

Interested persons are invited to participate in the making of the proposed rule by submitting such written data, views, or arguments as they may desire. Communications should identify the Rules Docket number and be submitted in triplicate to the address specified above. All communications received on or before the closing date for comments, specified above, will be considered before taking action on the proposed rule. The proposals contained in this notice may be changed in light of the comments received.

Comments are specifically invited on the overall regulatory, economic, environmental, and energy aspects of the proposed rule. All comments submitted will be available, both before and after the closing date for comments, in the Rules Docket for examination by interested persons. A report summarizing each FAA-public contact concerned with the substance of this proposal will be filed in the Rules Docket.

Commenters wishing the FAA to acknowledge receipt of their mailed comments submitted in response to this notice must submit a self-addressed, stamped postcard on which the following statement is made: ''Comments to Docket No. 2000–SW–03–AD.'' The postcard will be date stamped and returned to the commenter.

Availability of NPRMs

Any person may obtain a copy of this NPRM by submitting a request to the FAA, Office of the Regional Counsel, Southwest Region, Attention: Rules Docket No. 2000–SW–03–AD, 2601 Meacham Blvd., Room 663, Fort Worth, Texas 76137.

Discussion

This document proposes the adoption of a new AD for MDHI Model MD–900 helicopters, serial numbers 0008 through 0068. The AD would require modifying the non-rotating swashplate and re-identifying it and the swashplate assembly with a new P/N. The AD would also require creating or modifying the existing component history card or equivalent record to track the life of the newly identified non-rotating swashplate assembly and establishing a life limit of 1800 hours TIS. In addition, the AD would require inspecting and modifying, if necessary, the longitudinal drive link assembly. This proposal is prompted by reports of damage to the longitudinal drive link assembly. The damage is caused by the small clearance between the non-rotating swashplate bushing and the longitudinal drive link combined with the sharp outer edges of the non-rotating swashplate bushing. This condition, if not corrected, could result in damage to the longitudinal drive link, loss of control of the main rotor system, and subsequent loss of control of the helicopter.

The FAA has reviewed MDHI Service Bulletin SB900–071, dated January 10, 2000 (SB), which describes procedures for reworking of the bushing in the non-rotating swashplate assembly, re-identifying the swashplate and the non-rotating swashplate assemblies, and inspecting and repairing the longitudinal drive link assembly.

Since an unsafe condition has been identified that is likely to exist or develop on other MDHI Model MD–900 helicopters of the same type design, the proposed AD would require the following:

- Within the next 100 hours TIS or 3 months, whichever occurs first,
- Modify the non-rotating swashplate assembly, P/N 900C2010192–111 and reidentify as P/N 900C2010192–113 after modification;
- Re-identify swashplate assembly, P/N 900C1010004–125, as P/N 900C1010004–127;
- Create or modify the existing component history card or equivalent record to track the life of the newly identified non-rotating swashplate assembly, P/N 900C2010192–113, including the hours TIS accumulated when it was identified as P/N 900C2010192–111;
- Visually and dye-penetrant inspect and modify, if necessary, the longitudinal drive link assembly, P/N 900C2010212–101.
- Establish a life limit of 1800 hours TIS for the non-rotating swashplate assembly, P/N 900C2010192–113.

The actions would be required to be accomplished in accordance with the SB described previously.

The FAA estimates that 28 helicopters of U.S. registry would be affected by this proposed AD, that it would take approximately 2 work hours per helicopter to accomplish the proposed actions, and that the average labor rate is $60 per work hour. Required parts would cost approximately $1164 per helicopter. Based on these figures, the total cost impact of the proposed AD on U.S. operators is estimated to be $35,952.

The regulations proposed herein would not have a substantial direct effect on the States, on the relationship between the national Government and the States, or on the distribution of power and responsibilities among the various levels of government. Therefore, it is determined that this proposal would not have federalism implications under Executive Order 13132.

For the reasons discussed above, I certify that this proposed regulation (1) is not a ''significant regulatory action'' under Executive Order 12866; (2) is not a ''significant rule'' under the DOT Regulatory Policies and Procedures (44 FR 11034, February 26, 1979); and (3) if promulgated, will not have a significant economic impact, positive or negative, on a substantial number of small entities under the criteria of the Regulatory Flexibility Act. A copy of the draft regulatory evaluation prepared for this action is contained in the Rules Docket. A copy of it may be obtained by contacting the Rules Docket at the location provided under the caption **ADDRESSES**.

List of Subjects in 14 CFR Part 39

Air transportation, Aircraft, Aviation safety, Safety.

The Proposed Amendment

Accordingly, pursuant to the authority delegated to me by the Administrator, the Federal Aviation Administration proposes to amend part 39 of the Federal Aviation Regulations (14 CFR part 39) as follows:

PART 39—AIRWORTHINESS DIRECTIVES

1. The authority citation for part 39 continues to read as follows:

Authority: 49 U.S.C. 106(g), 40113, 44701.

§ 39.13 [Amended]

2. Section 39.13 is amended by adding a new airworthiness directive to read as follows:

MD Helicopters Inc.: Docket No. 2000–SW–03–AD

Applicability: Model MD–900 helicopters, serial numbers 0008 through 0068, certificated in any category.

Note 1: This AD applies to each helicopter identified in the preceding applicability provision, regardless of whether it has been otherwise modified, altered, or repaired in the area subject to the requirements of this AD. For helicopters that have been modified, altered, or repaired so that the performance

of the requirements of this AD is affected, the owner/operator must request approval for an alternative method of compliance in accordance with paragraph (c) of this AD. The request should include an assessment of the effect of the modification, alteration, or repair on the unsafe condition addressed by this AD; and if the unsafe condition has not been eliminated, the request should include specific proposed actions to address it.

Compliance: Required as indicated, unless accomplished previously.

To prevent damage to the longitudinal drive link, loss of control of the main rotor system, and subsequent loss of control of the helicopter, accomplish the following:

(a) Within the next 100 hours time-in-service (TIS) or 3 months, whichever occurs first:

(1) Modify the non-rotating swashplate assembly, part number (P/N) 900C2010192–111, in accordance with the Accomplishment Instructions, paragraphs 2.A.(1). and 2.A.(2)., of MD Helicopters (MDHI) Service Bulletin SB900–071, dated January 10, 2000 (SB).

(2) Re-identify swashplate assembly, P/N 900C1010004–125, as P/N 900C1010004–127, and non-rotating swashplate assembly, P/N 900C2010192–111, as P/N 900C2010192–113 using contrasting color permanent ink. When the ink is dry, apply varnish over the P/N.

(3) Create or modify the existing component history card or equivalent record to track the life of the non-rotating swashplate assembly, P/N 900C2010192–113. Include the hours TIS accumulated when P/N 900C2010192–113 was identified as P/N 900C2010192–111.

(4) Visually and dye-penetrant inspect the longitudinal drive link assembly, P/N 900C2010212–101, for gouging and cracking in accordance with the Accomplishment Instructions, paragraph 2.B.(1). and 2.B.(2). of the SB except that returning scrap parts to MDHI is not required by this AD.

(i) If a crack is found, before further flight, replace the longitudinal drive link assembly, P/N 900C2010212–101, with an airworthy longitudinal drive link assembly.

(ii) If gouging is found, modify the longitudinal drive link assembly, P/N 900C2010212–101, in accordance with the Accomplishment Instructions, paragraph 2.B.(3). of the SB.

(b) This AD revises the Airworthiness Limitations Section of the applicable maintenance manual by establishing a retirement life of 1800 hours TIS for the non-rotating swashplate assembly, P/N 900C2010192–113.

(c) An alternative method of compliance or adjustment of the compliance time that provides an acceptable level of safety may be used if approved by the Manager, Los Angeles Aircraft Certification Office. Operators shall submit their requests through an FAA Principal Maintenance Inspector, who may concur or comment and then send it to the Manager, Los Angeles Aircraft Certification Office.

Note 2: Information concerning the existence of approved alternative methods of compliance with this AD, if any, may be obtained from the Los Angeles Aircraft Certification Office.

(d) Special flight permits may be issued in accordance with §§ 21.197 and 21.199 of the Federal Aviation Regulations (14 CFR 21.197 and 21.199) to operate the helicopter to a location where the requirements of this AD can be accomplished.

Issued in Fort Worth, Texas, on May 25, 2000.

Eric Bries,

Acting Manager, Rotorcraft Directorate, Aircraft Certification Service.

[FR Doc. 00–14195 Filed 6–5–00; 8:45 am]

BILLING CODE 4910–13–U

DEPARTMENT OF COMMERCE

National Oceanic and Atmospheric Administration

15 CFR Part 922

Correction to the Florida Keys National Marine Sanctuary Regulations

AGENCY: National Marine Sanctuaries Program (NMSP), National Ocean Service (NOS), National Oceanic and Atmospheric Administration (NOAA), Department of Commerce (DOC).

ACTION: Proposed rule; correction

SUMMARY: The National Oceanic and Atmospheric Administration (NOAA) is adding language to a Proposed Rule concerning the Florida Keys National Marine Sanctuary (Docket No. 0005100129–0120–01) that was published in the Federal Register on May 18, 2000 (Volume 65, Number 97, Pages 31633–31680), to provide additional information in response to the requirements of the Paperwork Reduction Act.

DATES: Comments on this correction may be submitted with comments on the proposed rule which will be considered if received by July 31, 2000.

ADDRESSES: Written comments must be submitted to Sanctuary Superintendent, Florida Keys National Marine Sanctuary, P.O. Box 500368, Marathon, Florida, 33050. Comments may also be sent by facsimile to: (305) 743–2357. Comments will not be considered if submitted by e-mail or internet.

FOR FURTHER INFORMATION CONTACT: Billy Causey, Sanctuary Superintendent, at (305) 743–2437.

SUPPLEMENTARY INFORMATION: The following new paragraph is to be added to the second paragraph in the classification section for the Paperwork Reduction Act, on page 31670:

''Collection-of-information requirements for certification of preexisting leases, licenses, permits, approvals, or other authorizations in National Marine Sanctuaries, have been approved under OMB #0648–0141. The proposed rule would apply the certification requirement of Section 922.168 to holders of preexisting leases, licenses, permits, approvals, or other authorizations, in the boundary expansion area of the Tortugas Ecological Reserve. The estimated response time for this requirement is 30 minutes.''

In addition, the following language is to be added to the end of the classification section for the Paperwork Reduction Act, also at page 31670:

''Send comments on these or any other aspects of the collection of information to Billy Causey, Sanctuary Superintendent, Florida Keys National Marine Sanctuary, P.O. Box 500368, Marathon, Florida, 33050; and to OMB at the Office of Information and Regulatory Affairs, Office of Management and Budget, Washington, D.C., 20503 (Attention: NOAA Desk Officer).''

Authority: DSEIS/SMP is developed pursuant to section 304(a)(2) of the NMSA, 16 U.S.C. Sec. 1434(a)(2), consistent with, and in fulfillment of, the requirements of the National Environmental Policy Act of 1969.

(Federal Domestic Assistance Catalog Number 11.429 Marine Sanctuary Program)

Dated: June 1, 2000.

Ted Lillestolen,

Deputy Assistant Administrator for Ocean Services and Coastal Zone Management.

[FR Doc. 00–14116 Filed 6–1–00; 2:40 pm]

BILLING CODE 3510–08–M

DEPARTMENT OF THE TREASURY

Bureau of Alcohol, Tobacco and Firearms

27 CFR Part 9

[Notice No. 898]

RIN 1512–AA07

Proposal to Revise the Boundary of the Walla Walla Valley Viticultural Area and the Eastern Boundary of the Columbia Valley Viticultural Area (99R–141P)

AGENCY: Bureau of Alcohol, Tobacco and Firearms (ATF), Department of the Treasury.

ACTION: Notice of proposed rulemaking.

SUMMARY: The Bureau of Alcohol, Tobacco and Firearms (ATF) is proposing to extend the boundary of the Walla Walla Valley viticultural area. This proposal is the result of petitions filed by growers and winemakers located within the existing area and in

the new area under consideration. ATF is also proposing redrawing a 3-mile section of the boundary of the Columbia Valley viticultural area so that it coincides with the boundary of the Walla Walla Valley viticultural area.

ATF believes that establishing viticultural areas and authorizing use of viticultural area names as appellations of origin allow wineries to designate the specific areas where the grapes used to make the wine were grown and enable consumers to better identify the wines they purchase.

DATES: Written comments must be received by August 7, 2000.

ADDRESSES: Address written comments to the Chief, Regulations Division, Bureau of Alcohol, Tobacco and Firearms, 650 Massachusetts Avenue, NW, Washington, DC 20226. See the Public Participation section of this notice for additional ways to send comments. See the Disclosure section of this notice for the location of our Reading Room.

FOR FURTHER INFORMATION CONTACT: Marjorie D. Ruhf, Regulations Division, Bureau of Alcohol, Tobacco and Firearms, 650 Massachusetts Avenue, NW, Washington, DC 20226, telephone (202) 927–8202, e-mail *mdruhf@atfhq.atf.treas.gov.*

SUPPLEMENTARY INFORMATION:

Background

On August 23, 1978, ATF published Treasury Decision ATF–53 (43 FR 37672, 54624) revising regulations in 27 CFR part 4. These regulations allow the establishment of definite American viticultural areas. The regulations also allow the name of an approved viticultural area to be used as an appellation of origin in the labeling and advertising of wine.

On October 2, 1979, ATF published Treasury Decision ATF–60 (44 FR 56692) which added a new part 9 to 27 CFR, providing for the listing of approved American viticultural areas. Section 4.25a(e)(1), Title 27, CFR, defines an American viticultural area as a delimited grape-growing region distinguishable by geographical features, the boundaries of which have been recognized and defined in part 9. Section 4.25a(e)(2) outlines the procedure for establishing an American viticultural area. Any interested person may petition ATF to establish a grape-growing region as a viticultural area. The petition should include:

(a) Evidence that the name of the proposed viticultural area is locally and/or nationally known as referring to the area specified in the petition;

(b) Historical or current evidence that the boundaries of the viticultural area are as specified in the petition;

(c) Evidence relating to the geographical features (climate, soil, elevation, physical features, etc.) which distinguish the viticultural features of the proposed area from surrounding areas;

(d) A description of the specific boundaries of the viticultural area, based on features which can be found on United States Geological Survey (U.S.G.S.) maps of the largest applicable scale; and

(e) A copy of the appropriate U.S.G.S. map(s) with the boundaries prominently marked.

Original Designation of the Walla Walla Valley and Columbia Valley Viticultural Areas

The Walla Walla Valley viticultural area was established by Treasury Decision (T.D.) ATF–165 on February 6, 1984 (49 FR 4374). The original petition, filed by the Walla Walla Valley Wine Growers Association, had requested designation of an area of approximately 300,000 acres. At the time of the original petition, ATF had been concerned that the total area to be designated was very large in proportion to the area used for viticulture. ATF and the petitioner agreed to reduce the size of the proposed area to encompass only the locations where grapes were being commercially grown. As approved, the Walla Walla Viticultural Area consisted of approximately 260,000 acres, and had two wine producers and 60 acres of grapes. The area was within the counties of Walla Walla in Washington State and Umatilla in Oregon.

Later, when the Columbia Valley viticultural area was designated (T.D. ATF–190, November 13, 1984, [49 FR 44895–44899]), the Walla Walla Valley viticultural area was thought to be entirely within the Columbia Valley viticultural area. In preparation for the current rulemaking, we reviewed the maps in question and discovered that there is an area approximately 3 miles long where the eastern boundary of the Walla Walla Valley viticultural area extends beyond the eastern boundary of the Columbia Valley viticultural area. See our further discussion under ''ATF proposal for extension of the Columbia Valley viticultural area.''

Petitions for Extension of the Boundaries of Walla Walla Valley

ATF received a petition from Mr. Gaynor S. Derby of Spring Valley Vineyards, requesting that the northern boundary of the existing Walla Walla Valley viticultural area be extended to add approximately 3500 acres to the northeastern part of the approved area. Later, we received a petition from the Walla Walla Valley Winegrowers, a group representing 20 wineries and vineyards located within the existing area or within the area they propose to add. Mr. Norm McKibben of Pepper Bridge Winery submitted the petition on behalf of the group. The Walla Walla Valley Winegrowers propose to expand the Walla Walla Valley viticultural area to include all the area requested in the original petition and additional land to the north. The petitioners refer to the evidence submitted with the original petition to show geographic distinctiveness and name recognition and provide supplemental information.

If the Walla Walla Valley viticultural area were extended as the Walla Walla Winegrowers request, the area would have a total of approximately 340,000 acres, 800 acres of grapes, 23 growers and 21 wine producers. Mr. Derby, who petitioned for a smaller extension of the existing area, agreed to support the larger extension proposed by the Walla Walla Valley Winegrowers. In preparing this notice, we used material from both new petitions and from the original petition.

The Walla Walla Valley Winegrowers propose to restore the area removed from the original petition and extend the boundary from ½ mile to 4 miles further north. The area removed from the original petition had no commercial vineyards at the time of the original petition. There is now one commercial vineyard in that area, and there are two commercial vineyards in larger area the Walla Walla Valley Winegrowers propose to add.

In addition to the changes to the northern boundary noted above, the Walla Walla Valley Winegrowers proposed redrawing the southern boundary using features on the current revisions of the U.S.G.S. maps of the area. The measurements on these maps have been converted from feet to meters since the original application and designation of the area. As a result, the petitioner has chosen metric contour lines that do not exactly correspond to those in the original boundary, which represented feet. In particular, the southwest boundary of the area, originally marked by the 1000 foot contour line, would be changed to the 450 meter contour line, which corresponds to 1476 feet. This portion of the boundary would be moved outward (approximately 25 feet in most areas), enlarging the area very slightly. The land added by this proposed change is also drained by rivers that flow into the Walla Walla River, specifically Pine

Creek, Dry Creek (Oregon) and several unnamed streams.

In order to identify the southeast boundary, formerly marked by the 2000 foot contour line, the Walla Walla Valley Winegrowers suggested using the 600 meter (1967 foot) contour line. This would have resulted in a slight reduction in the viticultural area's size in that portion of the boundary. However, the 2000 foot contour line in that area is also the boundary of the Columbia Valley viticultural area. ATF is proposing that the common boundary be kept at 2000 feet, indicated by a line to be drawn between the 600 and 650 meter contour lines on the new maps.

ATF Proposal for Extension of the Columbia Valley Viticultural Area

ATF is also proposing a minor adjustment to the boundary of the Columbia Valley viticultural area. In the original designation of the Columbia Valley viticultural area, ATF stated that the Walla Walla Valley viticultural area was entirely within the Columbia Valley viticultural area. As noted above, our recent review of the maps disclosed that there is a small area near Dixie, Washington, where the Walla Walla Valley viticultural area lies outside the boundaries of the Columbia Valley viticultural area. This occurs in a place where the official boundary of the Columbia Valley moves from the 2000 foot contour line to a state highway. Since both of these map features were used to approximate a natural boundary, ATF believes the Columbia Valley viticultural area's boundary may be amended without affecting the integrity of the area. We propose to amend the Columbia Valley viticultural area's boundary so it follows the 2000 foot contour line for an additional 3 miles north, and then shifts to the state highway as before. This proposed change extends the common boundary between the two viticultural areas and will eliminate any resulting confusion.

Evidence of Name

Based on historical materials supplied by petitioners in their original petition, there is substantial evidence indicating that the proposed extension to the Walla Walla Valley viticultural area was locally and/or nationally known as Walla Walla Valley:

(a) The original petition stated the area proposed for designation as the Walla Walla Valley ''has been known as such since the time of settlement in the 1850's, even prior to the creation of the states of Oregon and Washington.''

(b) The Walla Walla Winegrowers noted the U.S.G.S. map of Walla Walla uses the name ''Walla Walla Valley'' to label an area that corresponds to the current viticultural area and places the name in a second location to the north of the existing boundary, in the area the petitioners seek to add.

(c) Mr. Derby quoted Professor W. D. Lyman's *History of Walla Walla County,* published in 1901. Professor Lyman described the Walla Walla Valley as ''a large belt of agricultural land lying south of the Snake River and west of the Blue Mountains, extending across the Oregon Line on the south''—a description which fits the expanded area proposed for designation.

Evidence of Boundaries

The boundary of the original Walla Walla Valley viticultural area was limited to existing grape-growing areas for administrative reasons. In response to the new petitions, we are reconsidering the evidence submitted in support of the original boundaries. In the original petition and the new petitions, the proposed Walla Walla Valley viticultural area would be delineated by boundaries corresponding to the following natural features:

On the southeast, by the point where the north and south branches of the Walla Walla River emerge from the mountainous Umatilla National Forest and join to form the Walla Walla River,

On the north, by the drainage divide between the Walla Walla River and the Touchet River, and

On the west, where the Walla Walla River empties into the Columbia River.

Distinguishing Features

According to the original petitioners and the petitioners in the current rulemaking, the entire Walla Walla Valley shares characteristics of topography, soil composition and climate that set it apart from the surrounding area. The evidence of the original petition was presented as applying to the entire valley, and not just to the area that ATF proposed for designation as the Walla Walla Valley viticultural area. Therefore, we will summarize the material that was originally published for comment in ATF Notice No. 471 on June 27, 1983 [48 FR 29541–29543], with the understanding that it applies equally to the proposed extension of the Walla Walla Valley viticultural area. We will supplement this information with material supplied by the two petitions for extension.

In his petition to extend the Walla Walla Valley viticultural area, Mr. Gaynor S. Derby quoted from an article titled ''Washington Wine and Dining'' published in the November 15, 1998, issue of *Wine Spectator:*

> Washington state straddles one of the world's great geological divides: the Cascade Range. To the west of its summits, the maritime influence of the Pacific is supreme, and copious rains produce lush evergreen forests. . . . To the east, the damp sea breezes are blocked, the air warms and vineyards flourish with water provided by the Columbia River. The result is a growing and dynamic wine region. . . .

Topography

The original petition quoted the State of Washington's *Geology and Groundwater Resources of the Walla Walla River Basin, Washington-Oregon,* published in 1965, to describe the topography of the area:

''In the Walla Walla River Basin, the main topographic unit is the valley plain, commonly called the Walla Walla Valley, which de[s]cends from about 1,500′ at the foot of the mountain slopes to about 500′ where the river cuts through the bedrock ridge near Divide. It lies astride the Oregon/Washington border.''

The area proposed for addition to the Walla Walla Valley viticultural area ranges from 250 to 600 meters (820 to 1,968 feet) in elevation, like the approved portion of the area. It is drained by creeks that generally flow south and east into the Walla Walla River. North of the new proposed boundary, the streams and creeks generally drain into the Touchet River, further to the north.

Soil

The original petition stated that the soils of the valley ''are classified by the Soil Conservation Service as Soils of Bottom Lands and Low Terraces, Soils of Loessal Uplands, Soils of Loessal and Basaltic Uplands and Soils of Loessal and Lake-Laid Terraces, basically all loess derived soils.'' Most of these soils are classed as I or II irrigated capability units by the Soil Conservation Service. By contrast, the soils west of the Touchet River and along the Snake and Columbia Rivers are classified as Class IV and VI. Soils to the east in the Blue Mountains are considered not suitable for cultivation. We note the areas chosen for soil contrast are outside the proposed expansion to the area.

Climate

As noted in the original petition, the climate of the Walla Walla Valley is distinctive because it has a growing season between 190 and 220 days, the longest within the surrounding six counties. The original petition contrasted places within the Walla Valley with places outside of the valley. The places chosen for contrast included Dayton, Prescott, and Eltopia,

Washington, all to the north of the proposed northern extension to the viticultural area.

The Walla Walla Valley receives an average of 12.5 inches of precipitation a year, light in the summer, increasing and peaking in the winter. The Columbia Basin to the west and north receives less than 10 inches of precipitation in a year, and the Blue Mountains to the east and southeast receive 25–45 inches. Again, the places chosen for contrast are outside the proposed extension of the viticultural area.

Proposed Boundaries

The proposed revision to the boundary of the Columbia Valley viticultural area is described in § 9.74. The proposed revision to the boundary of the Walla Walla viticultural area is described in § 9.91.

U.S.G.S. Maps

The Walla Walla Winegrowers provided appropriate U.S.G.S. maps with their proposed boundaries prominently marked.

Executive Order 12866

It has been determined that this proposed regulation is not a significant regulatory action as defined in Executive Order 12866. Accordingly, this proposal is not subject to the analysis required by this Executive Order.

Regulatory Flexibility Act

It is hereby certified that this regulation will not have a significant economic impact on a substantial number of small entities. Any benefit derived from the use of a viticultural area name is the result of the proprietor's own efforts and consumer acceptance of wines from a particular area. No new requirements are proposed. Accordingly, a regulatory flexibility analysis is not required.

Paperwork Reduction Act

The provisions of the Paperwork Reduction Act of 1995 (44 U.S.C. 3507(j)) and its implementing regulations, 5 CFR Part 1320, do not apply to this notice of proposed rulemaking because no requirement to collect information is proposed.

Public Participation

ATF requests comments on the proposed regulations from all interested persons. We specifically request comments on the clarity of the proposed rule and how it may be made easier to understand.

Please include the following in all comments:

ATTN: Notice No. 898

Your name,
Your company or association name, if it is pertinent to your comment,
Your reason for interest in the project (are you a consumer, dealer, producer?),
Your signature on paper comments sent by mail or facsimile transmission (FAX).

Address written comments to the Chief, Regulations Division, Bureau of Alcohol, Tobacco and Firearms, P.O. Box 50221, Washington, DC 20091–0221.

Fax comments to (202) 927–8525. Be sure fax comments are legible, on 8½″ x 11″ paper, and they are 3 pages or less.

E-mail comments to nprm@atfhq.atf.treas.gov. E-mail comments must contain no attachments, special characters or encryption.

Comments, including the name of the commenter, will be disclosed to the public. Do not include any material in your comment if you consider it to be confidential or inappropriate for disclosure to the public.

ATF will treat all comments as original written comments. We do not acknowledge receipt of comments. We will carefully consider all comments received on or before the closing date. We will also consider comments received after that date if it is practical to do so, but we cannot guarantee consideration of comments received after the comment period closes.

During the comment period, you may request an opportunity to present oral testimony at a public hearing. However, the Director reserves the right, in light of all circumstances, to determine if a public hearing is necessary.

Disclosure

You may view and copy written comments on this project from 10 a.m. to 12 noon in the ATF Public Reading Room, Room 6480, 650 Massachusetts Avenue, NW, Washington, DC. Call the Librarian at (202) 927–2890 for an appointment at other times. Contact the Disclosure Division at (202) 927–8480 or visit *http://www.atf.treas.gov/about/foia/index.htm* to learn how to request photocopies of comments.

Drafting Information: Marjorie D. Ruhf of the Regulations Division, Bureau of Alcohol, Tobacco and Firearms drafted this document.

List of Subjects in 27 CFR Part 9

Administrative practices and procedures, Consumer protection, Viticultural areas, and Wine.

Issuance

We propose to amend Title 27, Code of Federal Regulations, Part 9, American Viticultural Areas, as follows:

PART 9—AMERICAN VITICULTURAL AREAS

Paragraph 1. The authority citation for part 9 continues to read as follows:

Authority: 27 U.S.C. 205.

Par. 2. Section 9.74 is amended by revising paragraphs (c)(43) and (c)(44) to read as follows:

§ 9.74 Columbia Valley.

* * *

(c) *Boundaries.* * * *

(43) Then southwest following Washington Highway 126 and U.S. Highway 12 through Marengo, Dayton, and Waitsburg to a point where an unnamed light-duty road leaves Highway 12 in an easterly direction in Minnick Station, Washington;

(44) Then east following the unnamed light-duty road for approximately 250 feet until it reaches the 2000' contour line;

* * * * *

Par. 3. Section 9.91 is revised to read as follows:

§ 9.91 Walla Walla Valley.

(a) *Name.* The name of the viticultural area described in this section is ''Walla Walla Valley.''

(b) *Approved maps.* The appropriate maps for determining the boundaries of the Walla Walla Valley viticultural area are two U.S.G.S. maps, in the scale 1:100,000. They are entitled:

(1) ''Walla Walla,'' Washington—Oregon, 1980

(2) ''Pendleton,'' Oregon—Washington, 1983

(c) *Boundaries.* The Walla Walla Valley viticultural area is located within Walla Walla County in Washington State and Umatilla County in Oregon. It is entirely within the Columbia Valley viticultural area. The boundaries are as follows:

(1) The beginning point is on the Walla Walla quadrangle map, in T8N/37E, at the point where the 2,000 foot contour line intersects with an unnamed light duty road approximately 250 feet east of U.S. Highway 12 in Minnick, Washington (on maps measured in metric units, this elevation is between the 600 and 650 meter contour lines),

(2) Then the boundary goes northwest in a straight line for 7 kilometers (km), until it intersects with a power line that runs between T8N and T9N,

(3) Then the boundary follows the power line west for 8 km, where it diverges from the power line and goes west-southwest in a straight line for approximately 33 km to the intersection of 2 unnamed light duty roads in the area marked Ninemile Canyon in the southwest corner of T8N/R33E,

(4) Then the boundary goes south-southwest in a straight line approximately 8 km, until it reaches U.S. Highway 12, about 2.5 km east of Reese, Washington,

(5) Then the boundary goes south in a straight line for approximately 8 km, crossing the Washington—Oregon state line and moving onto the Pendleton U.S.G.S. map, where it meets the 450 m contour line in T6N/R32E, near an unnamed peak with an elevation of 461 m,

(6) Then the boundary follows the 450 m contour line in a generally southeasterly direction until it intersects Dry Creek in T4N/R35E,

(7) Then the boundary goes southeast along Dry Creek (Oregon) until it reaches the 2000 foot contour line,

(8) Then the boundary follows the 2000 foot contour line in a generally northeasterly direction, crossing the Oregon—Washington state line and returning to the Walla Walla U.S.G.S map, until it reaches the point of beginning.

Approved: May 22, 2000.

Bradley A. Buckles,

Director.

[FR Doc. 00–14162 Filed 6–5–00; 8:45 am]

BILLING CODE 4810–31–U

ENVIRONMENTAL PROTECTION AGENCY

40 CFR Part 52

[PA153–4100b; FRL–6702–4]

Approval and Promulgation of Air Quality Implementation Plans; Pennsylvania; Nitrogen Oxides Allowance Requirements

AGENCY: Environmental Protection Agency (EPA).

ACTION: Proposed rule.

SUMMARY: EPA proposes to approve the State Implementation Plan (SIP) revisions submitted by the Commonwealth of Pennsylvania on December 19, 1997 and December 27, 1999. These revisions implement Pennsylvania's portion of the Ozone Transport Commission's (OTC) September 27, 1994 Memorandum of Understanding (MOU) including a regional nitrogen oxides (NO_X) cap and trade program that will significantly reduce NO_X emissions generated within the Ozone Transport Region (OTR). In the Final Rules section of this **Federal Register**, EPA is approving the Commonwealth's SIP revision submittal as a direct final rule without prior proposal because the Agency views this as a noncontroversial submittal and anticipates no adverse comments. A detailed rationale for the approval is set forth in the direct final rule. If no adverse comments are received in response to this action, no further activity is contemplated. If EPA receives adverse comments, the direct final rule will be withdrawn and all public comments received will be addressed in a subsequent final rule based on this proposed rule. EPA will not institute a second comment period. Any parties interested in commenting on this action should do so at this time.

DATES: Comments must be received in writing by July 6, 2000.

ADDRESSES: Written comments may be mailed to David L. Arnold, Chief, Ozone & Mobile Sources Branch, Mailcode 3AP21, U.S. EPA, Region III, 1650 Arch Street, Philadelphia, PA 19103. Copies of the documents relevant to this action are available for public inspection during normal business hours at the Air Protection Division, EPA, Region III, 1650 Arch Street, Philadelphia, PA 19103 and Pennsylvania Department of Environmental Protection, Bureau of Air Quality, P.O. Box 8468, 400 Market Street, Harrisburg, PA 17105.

FOR FURTHER INFORMATION CONTACT: Cristina Fernandez, (215) 814–2178, or by e-mail at fernandez.cristina@epa.gov. While information may be requested via e-mail, comments must be submitted in writing to the Region III address provided above.

SUPPLEMENTARY INFORMATION: For further information, please see the direct final action, with the same title, that is located in the ''Rules and Regulations'' section of this **Federal Register** publication.

Dated: April 24, 2000.

Bradley M. Campbell,

Regional Administrator, Region III.

[FR Doc. 00–13770 Filed 6–5–00; 8:45 am]

BILLING CODE 6560–50–P

FEDERAL COMMUNICATIONS COMMISSION

47 CFR Part 24

[GEN Docket No. 90–314, ET Docket No. 92–100, PP Docket No. 93–253; FCC 00–159]

Narrowband Personal Communications Services; Competitive Bidding

AGENCY: Federal Communications Commission.

ACTION: Notice of proposed rule making.

SUMMARY: In this document the Commission seeks comment on whether it should license the one megahertz of narrowband Personal Communications Services (PCS) spectrum that has been held in reserve. The Commission seeks comment on how to channelize this one megahertz and on whether the unlicensed narrowband PCS spectrum that has already been channelized should be rechannelized to create licenses authorizing the use of larger blocks of spectrum.

DATES: Comments are due on or before July 5, 2000, and reply comments are due on or before July 20, 2000.

ADDRESSES: All comments and reply comments must be sent to Office of the Secretary, Federal Communications Commission, 445 12th Street, SW, Washington, DC 20554.

FOR FURTHER INFORMATION CONTACT: Alice Elder, Auctions and Industry Analysis Division, Wireless Telecommunications Bureau, at (202) 418–0660.

SUPPLEMENTARY INFORMATION: This is a summary of a Second Further Notice of Proposed Rule Making (*Second FNPRM*) adopted on May 5, 2000, and released on May 18, 2000. The complete text of this *Second FNPRM* is available for inspection and copying during normal business hours in the FCC Reference Center (Room CY–A257), 445 12th Street, SW, Washington, DC. It may also be purchased from the Commission's copy contractor, International Transcription Services, Inc. (ITS, Inc.), 1231 20th Street, NW, Washington, DC 20036, (202) 857–3800. It is also available on the Commission's web site at http://www.fcc.gov/wtb/auctions.

Synopsis of the Second Further Notice of Proposed Rule Making

1. The Commission tentatively concludes that it is in the public interest to proceed with licensing the one megahertz of narrowband PCS spectrum that has been held in reserve. Although a number of commenters argue that it is premature to auction this spectrum, considerable time has elapsed since these comments were filed. Moreover, the demand for spectrum has increased dramatically as a result of explosive growth in wireless communications and there is very little unencumbered spectrum available for new services. Thus, the Commission believes that the narrowband PCS reserve spectrum, which is unencumbered, should be made available to those interested in bringing new and innovative services to the public. To facilitate the introduction of new and innovative services, the Commission also tentatively concludes

that the reserve spectrum should be auctioned along with all of the other remaining unlicensed narrowband PCS spectrum. If the Commission ultimately decides that it is not in the public interest to auction the reserve spectrum at the same time as other remaining unlicensed spectrum, it nonetheless believes that it should proceed now with channelizing the reserve spectrum so that it is prepared to license this spectrum without delay when the market is ready to use it. The Commission seeks comment on these tentative conclusions.

2. The Commission seeks comment on how the reserve spectrum should be channelized. The current record does not provide an adequate basis for determining the best channelization plan for this spectrum. In Amendment of the Commission's Rules to Establish New Personal Communications Services, Narrowband PCS, Report and Order, 62 FR 27507 (May 20, 1997), and Further Notice of Proposed Rulemaking, 62 FR 27563 (May 20, 1997), the Commission sought comment on establishing two 300 kHz licenses and one 400 kHz license, and the Commission believes that it may make sense to create channel blocks that are larger than those currently in existence. Larger blocks may be useful to those seeking to provide innovative services.

3. In light of its tentative conclusion that the reserve spectrum should be auctioned simultaneously with all other remaining unlicensed narrowband PCS spectrum, the Commission also seeks comment on whether the unlicensed spectrum that has already been channelized should be rechannelized to create licenses authorizing the use of larger blocks of spectrum. The Commission asks commenters to address whether such rechannelization would facilitate the development of innovative services or otherwise assist narrowband PCS licensees in competing against other wireless sectors.

Procedural Matters

A. Ex Parte Rules—Permit-But-Disclose Proceeding

4. This is a permit-but-disclose notice and comment rule making proceeding. Ex parte presentations are permitted except during the Sunshine Agenda period, provided they are disclosed as provided in the Commission's rules. See generally 47 CFR 1.1202, 1.1203, and 1.1206(a).

B. Regulatory Flexibility Act Analysis

5. As required by the Regulatory Flexibility Act, 5 U.S.C. 603, the Commission has prepared an Initial Regulatory Flexibility Analysis (IRFA) for this Second FNPRM.

C. Paperwork Reduction Act Analysis

6. This Second FNPRM contains neither a new nor a modified information collection.

D. Comment Dates

7. Pursuant to applicable procedures set forth in 47 CFR 1.415, 1.419, interested parties may file comments on or before July 5, 2000, and reply comments on or before July 20, 2000. All relevant and timely comments will be considered by the Commission before final action is taken in this proceeding. Comments may be filed using the Commission's Electronic Comment Filing System (ECFS) or by filing paper copies. See Electronic Filing of Documents in Rulemaking Proceedings, 63 FR 24121 (May 1, 1998). Parties who choose to file by paper must file an original and four copies of each filing. If interested parties want each Commissioner to receive a personal copy of their comments, an original plus nine copies must be filed. If more than one docket or rulemaking number appear in the caption of this proceeding, commenters must submit two additional copies for each additional docket or rulemaking number. All comments and reply comments must be sent to the Commission's Secretary, Magalie Roman Salas, Office of the Secretary, Federal Communications Commission, 445 12th Street, SW, Room TW–A325, Washington, D.C. 20554. One copy should also be sent to the Commission's copy contractor, International Transcription Service, Inc., 1231 20th Street, NW, Washington, DC 20036. In addition, a courtesy copy should be delivered to Alice Elder, Auctions and Industry Analysis Division, Wireless Telecommunications Bureau, Federal Communications Commission, 445 12th Street, SW, Washington, DC 20554.

8. Parties who choose to file by paper should also submit their comments on diskette. These diskettes should be submitted to Alice Elder, Auctions and Industry Analysis Division, Wireless Telecommunications Bureau, Federal Communications Commission, 445 12th Street, SW, Washington, DC 20554. Such a submission should be on a 3.5 inch diskette formatted in an IBM compatible format using Word or compatible software. The diskette should be accompanied by a cover letter and should be submitted in ''read only'' mode. The diskette should be clearly labeled with the commenter's name, proceeding (including GEN Docket No. 90–314, ET Docket No. 92–100, PP Docket No. 93–253), type of pleading (comment or reply comment), date of submission, and the name of the electronic file on the diskette. The label should also include the following phrase: ''Disk Copy—Not an Original.'' Each diskette should contain only one party's pleadings, preferably in a single electronic file. In addition, commenters must send diskette copies to the Commission's copy contractor, International Transcription Service, Inc., 1231 20th Street, NW, Washington, DC 20036.

9. Comments filed through the ECFS can be sent as an electronic file via the Internet to <*http://www.fcc.gov/e-file/ecfs.html*>. Generally, only one copy of an electronic submission must be filed. If multiple docket or rulemaking numbers appear in the caption of this proceeding, however, commenters must transmit one electronic copy of the comments to each docket or rulemaking number referenced in the caption. In completing the transmittal screen, commenters should include their full name, Postal Service mailing address, and a reference to GEN Docket No. 90–314, ET Docket No. 92–100, and PP Docket No. 93–253. Parties may also submit an electronic comment by Internet e-mail. To obtain filing instructions for e-mail comments, commenters should send an e-mail to *ecfs@fcc.gov,* and should include the following words in the body of the message: ''get form <your e-mail address>.'' A sample form and directions will be sent in reply. Or you may obtain a copy of the ASCII Electronic Transmittal Form (FORM–ET) at http://www.fcc.gov/efile/email.html.

10. Documents filed in this proceeding will be available for public inspection during regular business hours at the FCC Reference Information Center, 445 12th Street, SW, Washington, DC 20554, and will be placed on the Commission's Internet site.

E. Ordering Clauses

11. Authority for issuance of this *Second FNPRM* is contained in sections 4(i), 257, 303(r), and 309(j) of the Communications Act of 1934, as amended, 47 U.S.C. 154(i), 257, 303(r), and 309(j).

12. The Commission's Consumer Information Bureau, Reference Information Center, shall send a copy of this Second FNPRM, including the Initial Regulatory Flexibility Analysis, to the Chief Counsel for Advocacy of the Small Business Administration.

Initial Regulatory Flexibility Analysis

13. As required by the Regulatory Flexibility Act (RFA), the Commission has prepared this present Initial Regulatory Flexibility Analysis (IRFA) of the possible significant economic impact on small entities by the policies and rules proposed in this *Second FNPRM.* Written public comments are requested on this IRFA. Comments must be identified as responses to the IRFA and must be filed by the deadlines for comments on the *Second FNPRM.* The Commission will send a copy of the *Second FNPRM,* including this IRFA, to the Chief Counsel for Advocacy of the Small Business Administration. *See* 5 U.S.C. 603(a).

A. Need for and Objectives of this Action

14. This *Second FNPRM* is being initiated to secure comment on the Commission's tentative conclusion that the one megahertz of narrowband PCS reserve spectrum should be licensed. The Commission believes that this spectrum, which is unencumbered, should be made available to those interested in bringing new and innovative services to the public, and that the Commission should work to avoid any shortage of spectrum that might limit service options. The *Second FNPRM* also seeks comment on how the reserve spectrum should be channelized. The Commission believes that creating channel blocks that are larger than those currently in existence may be useful to those seeking to provide innovative services. Finally, the *Second FNPRM* seeks comment on whether rechannelizing the unlicensed spectrum that has already been channelized, to create licenses authorizing the use of larger blocks of spectrum, would facilitate the development of innovative services or otherwise assist narrowband PCS licensees in competing against other wireless sectors.

B. Legal Basis

15. This action is authorized under sections 4(i), 303(r), and 309(j) of the Communications Act of 1934, as amended, 47 U.S.C. 154(i), 303(r), and 309(j).

C. Description and Estimate of the Number of Small Entities to Which the Proposed Rules Will Apply

16. The Final Regulatory Flexibility Analysis (FRFA) for the *Second R&O* adopted simultaneously with the *Second FNPRM* describes in detail the small entities that the Commission expects will be affected by the rules adopted in the *Second R&O* (published elsewhere in this issue of the **Federal Register**). These same entities would be affected by the rules proposed in the *Second FNPRM.* The number and description of such entities contained in Section iii of the FRFA are hereby incorporated in this IRFA.

D. Reporting, Recordkeeping, and Other Compliance Requirements

17. The Commission does not anticipate any additional reporting, recordkeeping, or other compliance requirements as a result of this *Second FNPRM.*

E. Steps Taken to Minimize Significant Economic Impact on Small Entities and Significant Alternatives Considered

18. The RFA requires an agency to describe any significant alternatives that it has considered in reaching its proposed approach, which may include the following four alternatives:

(a) The establishment of differing compliance or reporting requirements or timetables that take into account the resources available to small entities;

(b) The clarification, consolidation, or simplification of compliance or reporting requirements under the rule for small entities;

(c) The use of performance, rather than design, standards; and

(d) An exemption from coverage of the rule, or any part thereof, for small entities.

19. In the *Second FNPRM* the Commission seeks comment on whether the narrowband PCS reserve spectrum should be licensed. The Commission believes that licensing this spectrum would make it easier for innovators to acquire spectrum and develop services, and that this goal is consistent with promoting opportunities for small businesses. The Commission also seeks comment on whether rechannelizing the unlicensed spectrum that has already been channelized would assist narrowband PCS licensees in competing against other services.

F. Federal Rules That Overlap, Duplicate, or Conflict With These Rules

20. None.

List of Subjects in 47 CFR Part 24

Communications common carriers, Personal communications services, Radio, Reporting and recordkeeping requirements.

Federal Communications Commission.

William F. Caton,

Deputy Secretary.

[FR Doc. 00–13962 Filed 6–2–00; 8:45 am]

BILLING CODE 6712–01–P

DEPARTMENT OF COMMERCE

National Oceanic and Atmospheric Administration

50 CFR Part 622

[Docket No. 000502120–0120–01; I.D. 041000E]

RIN 0648–AN39

Fisheries of the Caribbean, Gulf of Mexico, and South Atlantic; Snapper-Grouper Fishery off the Southern Atlantic States; Amendment 12

AGENCY: National Marine Fisheries Service (NMFS), National Oceanic and Atmospheric Administration (NOAA), Commerce.

ACTION: Proposed rule; request for comments.

SUMMARY: NMFS issues this proposed rule to implement Amendment 12 to the Fishery Management Plan for the Snapper-Grouper Fishery of the South Atlantic Region (FMP). This rule would limit the harvest and possession of red porgy in or from the exclusive economic zone (EEZ) off the southern Atlantic states to specified incidental catch amounts, add to the parameters that may be established or modified via the FMP's framework procedure for regulatory adjustments, and modify the snapper-grouper limited access system to allow transfers of a trip-limited permit among vessels owned by the same person regardless of vessel size. The intended effect is to protect the red porgy resource, which is currently overfished; to facilitate timely implementation of measures for the protection of snapper-grouper essential fish habitat (EFH) and essential fish habitat areas of particular concern (EFH HAPCs); and to remove an unnecessary restriction on the transfer of snapper-grouper trip-limited permits.

DATES: Written comments on this proposed rule must be received no later than 5 p.m., eastern standard time, on July 6, 2000.

ADDRESSES: Copies of Amendment 12 may be obtained from the South Atlantic Fishery Management Council, One Southpark Circle, Suite 306, Charleston, SC 29407–4699; phone: 843–571–4366; fax: 843–769–4520. Amendment 12 includes a Supplemental Environmental Impact Statement (SEIS), an Initial Regulatory Flexibility Analysis (IRFA), a Regulatory Impact Review (RIR), and a Social Impact Assessment/Fishery Impact Statement.

Written comments on this proposed rule should be sent to the Southeast

Regional Office, NMFS, 9721 Executive Center Drive N., St. Petersburg, FL 33702. Comments also may be sent via facsimile (fax) to 727–570–5583. Comments will not be accepted if submitted via e-mail or the Internet.

FOR FURTHER INFORMATION CONTACT: Dr. Peter J. Eldridge, 727–570–5305, fax 727–570–5583, e-mail *Peter.Eldridge@noaa.gov*.

SUPPLEMENTARY INFORMATION: The snapper-grouper fishery off the southern Atlantic states is managed under the FMP. The FMP was prepared by the South Atlantic Fishery Management Council (Council) and approved and implemented by NMFS under the authority of the Magnuson-Stevens Fishery Conservation and Management Act (Magnuson-Stevens Act) by regulations at 50 CFR part 622.

Red Porgy

The red porgy resource is overfished. In an emergency interim rule published September 3, 1999 (64 FR 48324), NMFS prohibited the harvest and possession of red porgy in or from the EEZ off the southern Atlantic states. NMFS extended the prohibition on harvest and possession of red porgy through August 28, 2000 (65 FR 10039; February 25, 2000). The detailed analysis that led to the conclusion that the red porgy resource is overfished was summarized in the emergency interim rule (64 FR 48324) and is not repeated here. If the measures in Amendment 12 are approved, the Council and NMFS intend that they would be implemented by final rule and effective August 29, 2000.

Amendment 12 proposes to limit the harvest and possession of red porgy to incidental catches. Specifically, a recreational fisherman would be restricted to one red porgy per day or per trip, whichever is more restrictive. A commercial fisherman would be limited to 50 lb (22.7 kg) per trip during the months of May through December and to one red porgy per day or per trip, whichever is more restrictive, during January through April. The current prohibition on sale of red porgy during March and April would be extended to the months of January through April.

The Council has concluded that these measures would reduce catches of red porgy sufficiently to allow rebuilding of the stock. The Council recognized the severely overfished status of red porgy, as indicated in the most recent stock assessment, based on data through 1996 that was presented at the March 1999 Council meeting. More recent scientific data presented at the November/December 1999 Council meeting indicate a slight increase in the stock size. The majority of public input to date advocates restrictive management measures but not a total prohibition on harvest. The Council considered the public input and the status of the red porgy resource and concluded that fishing mortality must be reduced significantly to allow red porgy to rebuild. The goal of the rebuilding program would be an increase in the stock biomass to a level that would support harvests at maximum sustainable yield (MSY). Further, the Council believes that total prohibition of harvest would be wasteful. Red porgy would continue to be caught as part of the multi-species, mid-depth snapper-grouper fishery and a significant portion of them would not survive catch and release. Thus, the Council proposes to allow retention of limited amounts of red porgy as incidental catch rather than the total prohibition that is currently in effect under the emergency interim rule. In developing the proposed measures, the Council attempted to limit fishing mortality to the level that would result from regulatory discards under a total prohibition of harvest.

The Council also concluded that the existing 14–inch (35.6–cm), total length, minimum size limit will protect red porgy up to ages 4 to 4.5. All female red porgy are mature at age 3, and 19 percent are mature at age 1. The 14–inch (35.6–cm) minimum size limit should allow 100 percent of the females to reproduce at ages 3 and 4, which should result in significant increases in recruitment. In addition, limiting retention of commercially caught red porgy to one fish per day or per trip during January through April will protect red porgy during their spawning period. In combination, these two measures are expected to contribute significantly to the rebuilding of the red porgy resource.

The expected rebuilding time frame for red porgy would be 18 years. Red porgy cannot be rebuilt within 10 years due to the extremely low stock size, as data through 1996 indicate, and to the fact that species, such as red porgy, which switch sex with age appear to be more susceptible to overfishing. NMFS recommended that the Council specify the rebuilding timeframe as 10 years plus 1 generation time which equates to 18 years.

Framework Procedure

In accordance with the FMP, certain factors related to the management of snapper-grouper may be established or modified via a framework procedure that enables more timely implementation than is possible via an FMP amendment. In conjunction with NMFS' approval of the Council's Comprehensive Amendment Addressing Essential Fish Habitat (EFH) in the Fishery Management Plans of the South Atlantic Region (Comprehensive EFH Amendment), NMFS published a proposed rule to implement the Comprehensive EFH Amendment's approved measures that would add parameters regarding EFH and EFH HAPCs to those for which the framework procedure was applicable (64 FR 37082, July 9, 1999). Amendment 12 proposes to clarify that actions that may be taken under the framework procedure regarding EFH and EFH HAPCs include restrictions on gear and fishing activities.

Transfer of Snapper-Grouper Permits

Under the regulations to implement FMP Amendment 8, some vessels have trip-limited commercial permits for snapper-grouper, i.e., permits that allow no more than 225 lb (102.1 kg) of snapper-grouper per trip. An owner of a vessel with such a permit may transfer the permit to another vessel owned by the same entity only if the replacement vessel is equal to or less than the length and gross tonnage of the replaced vessel. While it may be argued that replacement of a smaller vessel with a larger one may increase the harvesting capacity of a vessel with a trip-limited permit, contrary to the original intent of Amendment 8's limited access program, such increase is constrained by the 225–lb (102.1–kg) limit. The Council concluded that retaining the size/gross tonnage transfer restriction creates administrative difficulties for vessel owners and for NMFS and has limited benefits. Accordingly, Amendment 12 proposes to remove the size/gross tonnage transfer restriction.

Additional Measures in Amendment 12

In addition to the measures described here for the management of red porgy, Amendment 12 proposes to establish the following for red porgy: MSY; optimum yield (OY); maximum fishing mortality threshold (MFMT), the fishing mortality rate which, if exceeded, constitutes overfishing; minimum stock size threshold (MSST), the stock size below which red porgy are overfished; and a rebuilding schedule, the period during which the overfished red porgy resource should be rebuilt to a level that will support MSY. The specific proposals are as follows:

MSY—1,987 metric tons (mt).

OY—The amount of harvest that can be taken by fishermen of the U.S. while maintaining the spawning potential ratio (SPR) at or above 45 percent of the

static SPR. (Note: This does not represent an SPR proxy for OY but an equilibrium yield associated with a fishing mortality rate [F_{OY}].)

MFMT—0.43, which is the mortality rate corresponding to 35 percent of the static SPR.

MSST—3,328 mt.

Rebuilding time frame—18 years, with 1999 as year 1.

The Council is concerned that it may be setting MSY, OY, and MSST too high, given that the proposed MSY of 1,987 mt has never been harvested. The Council will review these estimates when the stock assessment is updated in 2 years. If changes are necessary, appropriate levels will be proposed through the framework procedure or via an FMP amendment, as appropriate.

Availability of Amendment 12

Additional background and rationale for the measures discussed above are contained in Amendment 12. The availability of Amendment 12 was announced in the **Federal Register** on April 19, 2000, (65 FR 20939). Written comments on Amendment 12 must be received by June 19, 2000. All comments received on Amendment 12 or on this proposed rule during their respective comment periods will be addressed in the preamble to the final rule.

Classification

At this time, NMFS has not determined that Amendment 12 is consistent with the national standards of the Magnuson-Stevens Act and other applicable laws. NMFS, in making that determination, will take into account the data, views, and comments received during the comment period on Amendment 12.

This proposed rule has been determined to be significant for purposes of E.O. 12866.

The Council prepared a final supplemental environmental impact statement for the FMP; a notice of availability was published on May 12, 2000, (65 FR 30587).

The Council prepared an IRFA, based on the RIR, and concluded that this proposed rule, if adopted, would have a significant economic impact on a substantial number of small business entities. NMFS concurs with the finding. A summary of the IRFA with other information supplied by NMFS follows.

This proposed rule is being considered because the red porgy stock is severely overfished, and the Magnuson-Stevens Act requires the Council to take action to resolve the overfished status of the stock. The Magnuson-Stevens Act provides the legal basis for all the actions proposed by the Council. The actions having an economic impact on small entities would restrict commercial landings of red porgy to a maximum of 50 lb (22.7 kg) per trip, close the commercial red porgy fishery from January through April, reduce the recreational bag limit from 5 to 1 red porgy per angler per day or per trip (whichever is more restrictive), and allow the owner of a vessel having a 225–lb (102–kg) trip-limited permit for snapper-grouper to transfer the permit to a larger vessel under the same ownership.

Other measures would define MSY and OY for red porgy and would change some framework provisions in the FMP, including providing the Council with more latitude under the framework to suggest additional regulatory actions designed to protect EFH and HAPCs. These other measures would not have any immediate economic impacts, but future actions to implement management measures associated with the new framework measures or to achieve MSY or OY may have economic impacts and would be analyzed at the time that they are implemented.

There are about 1,200 fishing craft (boats and vessels combined) that are operated by entities that hold permits for commercial snapper grouper fishing, and all such entities are considered to represent small business entities. The Council and NMFS are aware that some small entities may control more than one harvesting unit, so the number of small entities impacted is likely to be slightly lower than the number of craft involved in the legal harvest of snapper grouper species. About 330 of the fishing craft have a history of red porgy landings, and, of these, about 270 are determined to be directly impacted by the proposed actions. The average (vessels and boats combined) length is 37.2 ft (11.4 m), and investment in these craft is estimated at $53,000 for those using bottom hook-and-line gear and at $237,000 for those using bottom longline gear. The fishing craft generate annual average gross revenues of about $42,000 and have net operating revenues (gross revenues minus trip costs) of about $29,000 per year. Most of the revenue is generated from species other than red porgy.

In addition to the effects on enterprises that are engaged in the commercial harvest of snapper grouper species, the proposal for a 1–fish recreational bag limit will affect the operations of some headboat operations that are also defined as small business entities. NMFS estimates that about one third of the headboat fleet or about 33 vessels in South Atlantic waters have enough red porgy landings to be potentially affected by the bag limit action, but there is no definitive information available from which to quantify this impact. The headboats have an average length of 63 ft (19 m), a total capital investment of $220,000 and generate annual average gross revenue of about $123,000.

No additional reporting, record keeping, or other compliance costs related to the proposals were identified, and no duplicative, overlapping, or conflicting Federal rules were identified.

The Council defined the red porgy actions, including the commercial trip limit, the commercial closed season, and the recreational bag limit, as a single action and considered three alternatives to the action. One alternative was the status quo. Although the status quo would have no short-term negative economic impacts on small entities, it was rejected because the Magnuson-Stevens Act specifically requires the Council to take actions to rebuild this severely overfished fishery. Another rejected alternative would prohibit all commercial and recreational fishing for red porgy. The Council rejected this alternative because of the increased short-term negative impacts of a total and indefinite prohibition on all fishing for red porgy. The Council also noted that, while the rejected alternative would rebuild the red porgy stocks at a higher rate than under the proposed alternative, the proposed alternative would still result in stock rebuilding. The Council expressed an intent to review the status of the red porgy stock every 2 years and to take additional actions in the future, if necessary. The other rejected alternative was to adopt the commercial trip limit of 50 lb (22.7 kg), but not to have a commercial closure or a reduction in the recreational bag limit. The Council rejected this alternative because the biological analyses indicated that a more restrictive approach, such as the proposed alternative, was necessary to meet the specific goal of rebuilding the red porgy stock within an 18-year period. The status quo was considered as an alternative to the action to allow the owner of a vessel with a trip-limited permit for snapper-grouper to transfer the permit to a larger vessel under the same ownership. The status quo was rejected because it was not the Council's original intent to have the transfer restriction apply to a vessel owner who desires to transfer the permit to another vessel owned by the same small entity.

Copies of the IRFA are available (see **ADDRESSES**).

The President has directed Federal agencies to use plain language in their communications with the public, including regulations. To comply with this directive, we seek public comment on any ambiguity or unnecessary complexity arising from the language used in this interim rule. Such comments should be directed to NMFS Southeast Regional Office (see **ADDRESSES**).

List of Subjects in 50 CFR Part 622

Fisheries, Fishing, Puerto Rico, Reporting and recordkeeping requirements, Virgin Islands.

Dated: May 31, 2000.

Penelope D. Dalton,

Assistant Administrator for Fisheries, National Marine Fisheries Service.

For the reasons set out in the preamble, 50 CFR part 622 is proposed to be amended as follows:

PART 622—FISHERIES OF THE CARIBBEAN, GULF, AND SOUTH ATLANTIC

1. The authority citation for part 622 continues to read as follows:

Authority: 16 U.S.C. 1801 *et seq.*

2. In § 622.18, paragraph (e)(2) is revised to read as follows:

§ 622.18 South Atlantic snapper-grouper limited access.

* * * * *

(e) * * *

(2) *Trip-limited permits.* An owner of a vessel with a trip-limited permit may request that the RA transfer the permit to another vessel owned by the same entity.

* * * * *

3. In § 622.36, paragraph (b)(5) is revised to read as follows:

§ 622.36 Seasonal harvest limitations.

* * * * *

(b) * * *

(5) *Red porgy.* During January, February, March, and April, each year, the possession of red porgy in or from the South Atlantic EEZ and in the South Atlantic on board a vessel for which a valid Federal commercial or charter vessel/headboat permit for South Atlantic snapper-grouper has been issued, without regard to where such red porgy were harvested, is limited to one per person per day or one per person per trip, whichever is more restrictive. Such red porgy are subject to the prohibition on sale or purchase, as specified in § 622.45(d)(5).

4. In § 622.39, paragraphs (d)(1)(vi) and (d)(2) are revised to read as follows:

§ 622.39 Bag and possession limits.

* * * * *

(d) * * *

(1) * * *

(vi) Red porgy—1.

* * * * *

(2) *Possession limits.* (i) Provided each passenger is issued and has in possession a receipt issued on behalf of the vessel that verifies the duration of the trip—

(A) A person aboard a charter vessel or headboat on a trip that spans more than 24 hours may possess no more than two daily bag limits of species other than red porgy.

(B) A person aboard a headboat on a trip that spans more than 48 hours and who can document that fishing was conducted on at least 3 days may possess no more than three daily bag limits of species other than red porgy.

(ii) A person aboard a vessel may not possess red porgy in or from the EEZ in excess of one per day or one per trip, whichever is more restrictive.

* * * * *

5. In § 622.44, paragraph (c)(4) is added to read as follows:

§ 622.44 Commercial trip limits.

* * * * *

(c) * * *

(4) *Red porgy.* (i) From May 1 through December 31, 50 lb (22.7 kg).

(ii) From January 1 through April 30, the seasonal harvest limit specified in § 622.36(b)(5) applies.

* * * * *

6. In § 622.45, paragraph (d)(5) is revised and paragraph (d)(7) is added to read as follows:

§ 622.45 Restrictions on sale/purchase.

* * * * *

(d) * * *

(5) During January, February, March, and April, no person may sell or purchase a red porgy harvested from the South Atlantic EEZ or, if harvested by a vessel for which a valid Federal commercial or charter vessel/headboat permit for South Atlantic snapper-grouper has been issued, harvested from the South Atlantic. The prohibition on sale/purchase during January through April does not apply to red porgy that were harvested, landed ashore, and sold prior to January 1 and were held in cold storage by a dealer or processor. This prohibition also does not apply to a dealer's purchase or sale of red porgy harvested from an area other than the South Atlantic, provided such fish is accompanied by documentation of harvest outside the South Atlantic. Such documentation must contain:

(i) The information specified in 50 CFR part 300 subpart K for marking containers or packages of fish or wildlife that are imported, exported, or transported in interstate commerce;

(ii) The official number, name, and home port of the vessel harvesting the red porgy;

(iii) The port and date of offloading from the vessel harvesting the red porgy; and

(iv) A statement signed by the dealer attesting that the red porgy was harvested from an area other than the South Atlantic.

* * * * *

(7) During March and April, no person may sell or purchase a gag or black grouper harvested from the South Atlantic EEZ or, if harvested by a vessel for which a valid Federal commercial or charter vessel/headboat permit for South Atlantic snapper-grouper has been issued, harvested from the South Atlantic. The prohibition on sale/purchase during March and April does not apply to gag or black grouper that were harvested, landed ashore, and sold prior to March 1 and were held in cold storage by a dealer or processor. This prohibition also does not apply to a dealer's purchase or sale of gag or black grouper harvested from an area other than the South Atlantic, provided such fish is accompanied by documentation of harvest outside the South Atlantic. Such documentation must contain:

(i) The information specified in 50 CFR part 300 subpart K for marking containers or packages of fish or wildlife that are imported, exported, or transported in interstate commerce;

(ii) The official number, name, and home port of the vessel harvesting the gag or black grouper;

(iii) The port and date of offloading from the vessel harvesting the gag or black grouper; and

(iv) A statement signed by the dealer attesting that the gag or black grouper was harvested from an area other than the South Atlantic.

* * * * *

7. In § 622.48, paragraph (f) is revised to read as follows:

§ 622.48 Adjustment of management measures.

* * * * *

(f) *South Atlantic snapper-grouper and wreckfish.* For species or species groups: Biomass levels, age-structured analyses, target dates for rebuilding overfished species, MSY, ABC, TAC, quotas, trip limits, bag limits, minimum sizes, gear restrictions (ranging from regulation to complete prohibition), seasonal or area closures, definitions of essential fish habitat, essential fish habitat, essential fish habitat HAPCs or Coral HAPCs, and restrictions on gear

and fishing activities applicable in essential fish habitat and essential fish habitat HAPCs.

* * * * *

[FR Doc. 00–14197 Filed 6–5–00; 8:45 am]

BILLING CODE 3510–22–F

DEPARTMENT OF COMMERCE

National Oceanic and Atmospheric Administration

50 CFR Part 635

[I.D. 120999B]

Atlantic Highly Migratory Species Fisheries; Public Hearing

AGENCY: National Marine Fisheries Service (NMFS), National Oceanic and Atmospheric Administration (NOAA), Commerce.

ACTION: Change in public hearing date.

SUMMARY: NMFS published a public hearing announcement and request for comments on May 24, 2000, to receive comments from fishery participants and other members of the public regarding proposed regulations to establish North Atlantic swordfish quotas for the 2000–2002 fishing years and to change trade restrictions for Atlantic bluefin tuna and swordfish. NMFS herewith announces a change in the date of the public hearing to be held in Pompano Beach, FL from June 8, 2000, to July 11, 2000.

To accommodate people unable to attend a hearing or wishing to provide written comments, NMFS also solicits written comments on the proposed rule.

DATES: The new hearing is scheduled as follows:

1. Tuesday, July 11, 2000, 7 to 9:30 p.m., Pompano Beach, FL.

Written comments on the proposed rule or the draft Environmental Assessment/Regulatory Impact Review/Initial Regulatory Flexibility Analysis (EA/RIR/IRFA) must be received at the appropriate address or fax number (see **ADDRESSES**) no later than 5 p.m., eastern standard time, on July 18, 2000.

ADDRESSES: The location for this hearing is as follows:

1. Pompano Beach Civic Center, 1801 NE 6th Street, Pompano Beach, FL 33060.

Written comments on the proposed rule or EA/RIR/IRFA should be sent to Rebecca Lent, Chief, Highly Migratory Species Management Division, Office of Sustainable Fisheries (F/SF1), National Marine Fisheries Service, 1315 East-West Highway, Silver Spring, MD 20910. Comments also may be sent via facsimile (fax) to 301–713–1917. Comments will not be accepted if submitted via e-mail or Internet. For copies of the proposed rules or EA/RIR/IRFA contact Rachel Husted at 301–713–2347, or write to Rebecca Lent.

FOR FURTHER INFORMATION CONTACT: Rachel Husted at 301–713–2347, fax 301–713–1917, e-mail rachel.husted@noaa.gov.

SUPPLEMENTARY INFORMATION: The proposed regulations that are the subject of the hearings are necessary to address requirements of the Magnuson-Stevens Fishery Conservation and Management Act for the conservation and management of highly migratory species.

A complete description of the measures, the purpose and need for the proposed actions, and information on other hearing locations is contained in the proposed rules, published Wednesday May 24, 2000 (65 FR 33517 and 65 FR 33519), and is not repeated here.

Persons submitting written comments on the proposed rule or the EA/RIR/IRFA should include their name, address and, if possible, phone number; the title of the document on which comments are being submitted; and specific factors or comments along with supporting reasons that NMFS should consider in reaching a decision.

Special Accommodations

The hearings are physically accessible to people with disabilities. Requests for sign language interpretation or other auxiliary aids should be directed to Rachel Husted (see **FOR FURTHER INFORMATION CONTACT**) at least 7 days prior to the hearing or meeting.

Authority: 16 U.S.C. 971 *et seq.*, and 16 U.S.C. 1801 *et seq.*

Dated: May 31, 2000.

Bruce C. Morehead,

Acting Director, Office of Sustainable Fisheries, National Marine Fisheries Service.

[FR Doc. 00–14037 Filed 5–31–00; 4:33 pm]

BILLING CODE 3510–22–F

Notices

Federal Register

Vol. 65, No. 109

Tuesday, June 6, 2000

This section of the FEDERAL REGISTER contains documents other than rules or proposed rules that are applicable to the public. Notices of hearings and investigations, committee meetings, agency decisions and rulings, delegations of authority, filing of petitions and applications and agency statements of organization and functions are examples of documents appearing in this section.

DEPARTMENT OF AGRICULTURE

Food and Nutrition Service

Agency Information Collection Activities: Proposed Collection; Comment Request—Forms FNS–806–A, Claim for Reimbursement (National School Lunch and School Breakfast Programs), and FNS–806–B, Claim for Reimbursement (Special Milk Program for Children)

AGENCY: Food and Nutrition Service, USDA.

ACTION: Notice and request for comments.

SUMMARY: In accordance with the Paperwork Reduction Act of 1995, this notice invites the public to comment on the Food and Nutrition Service (FNS) use of Forms FNS–806–A and FNS–806–B, Claims for Reimbursement. The Forms are used to collect data to determine the amount of reimbursement school food authorities participating in the National School Lunch Program (NSLP), School Breakfast Program (SBP), and Special Milk Programs for Children (SMP) are eligible to receive.

DATES: Written comments must be submitted on or before August 7, 2000.

ADDRESSES: Send comments or requests for copies of this information collection to Terry A. Hallberg, Chief, Program Analysis and Monitoring Branch, Child Nutrition Division, Food and Nutrition Service, USDA, 3101 Park Center Drive, Room 1008, Alexandria, Virginia 22302.

Comments are invited on: (a) Whether the proposed collection of information is necessary for the proper performance of the functions of the agency, including whether the information will have practical utility; (b) the accuracy of the agency's estimate of the burden of the proposed collection of information; (c) ways to enhance the quality, utility and clarity of the information to be collected; and (d) ways to minimize the burden of the collection of information on respondents, including through the use of automated collection techniques or other forms of information technology.

All responses to this notice will be summarized and included in the request for OMB approval. All comments will also become a matter of public record.

FOR FURTHER INFORMATION CONTACT: Terry Hallberg, (703) 305–2590.

SUPPLEMENTARY INFORMATION:

Titles: Forms FNS–806–A, Claim for Reimbursement, (National School Lunch, and School Breakfast Programs), and FNS–806–B, Claim for Reimbursement (Special Milk Program).

OMB Number: 0584–0284.

Expiration Date: May 31, 2000.

Type of Request: Extension of a currently approved collection.

Abstract: The NSLP, SBP and SMP claims for reimbursement forms, FNS–806–A and FNS–806–B, are used to collect meal and cost data from school food authorities whose participation in these programs are administered directly by FNS Regional Offices (Regional Office Administered Programs, or ROAP). In order to determine the amount of reimbursement school food authorities are entitled to receive for meals and milk served, they must complete these forms. The completed forms are submitted to FNS' Regional Offices where they are entered into a computerized payment system. The payment system computes earned reimbursement.

Earned reimbursement in the NSLP, SBP and SMP is based on performance which is measured as an assigned rate per meal or half pint of milk served, with cost comparisons for free milk and severe need breakfasts. To fulfill the earned reimbursement requirements set forth in NSLP, SBP and SMP regulations issued by the Secretary of Agriculture (7 CFR 210.8, 220.11, 215.10), the meal and cost data must be collected on forms FNS–806–A and FNS–806–B. These forms are an intrinsic part of the accounting system being used currently by the subject programs to ensure proper reimbursement as well as to facilitate adequate recordkeeping.

The claims for reimbursement for the NSLP and SBP are on the FNS–806–A and the claims for reimbursement for SMP are on the FNS–806–B.

Estimate of Burden: Public reporting burden for this collection of information is estimated to average .5 hours per response.

Respondents: The respondents are school food authorities and facilities participating in the NSLP, SBP, and SMP under the auspices of the FNS ROAP.

Estimated Number of Respondents Form 806–A: 340.

Estimated Number of Respondents Form 806–B: 180.

Estimated Number of Responses per Respondent Form 806–A: 10.

Estimated Number of Responses per Respondent Form 806–B: 10.

Estimated Total Annual Burden on Respondents Form 806–A: 3400.

Estimated Total Annual Burden on Respondents Form 806–B: 1800.

Estimated Total Number of Respondents: 520.

Estimated Number of Responses per Respondent: 10.

Estimated Total Annual Burden on Respondents: 5200.

Dated: May 30, 2000.

Samuel Chambers, Jr.,

Administrator.

[FR Doc. 00–14095 Filed 6–5–00; 8:45 am]

BILLING CODE 3410–30–U

DEPARTMENT OF AGRICULTURE

Forest Service

Newspapers Used for Publication of Legal Notice of Appealable Decisions for the Intermountain Region; Utah, Idaho, Nevada, and Wyoming

AGENCY: Forest Service, USDA.

ACTION: Notice.

SUMMARY: This notice lists the newspapers that will be used by all ranger districts, forests, and the Regional Office of the Intermountain Region to publish legal notice of all decisions subject to appeal under 36 CFR 215 and 36 CFR 217. The intended effect of this action is to inform interested members of the public which newspapers will be used to publish legal notices of decisions, thereby allowing them to receive constructive notice of a decision, to provide clear evidence of timely notice and to achieve consistency in administering the appeals process.

DATES: Publication of legal notices in the listed newspapers will begin with decisions subject to appeal that are

made on or after June 1, 2000. The list of newspapers will remain in effect until December 1, 2000, when another notice will be published in the **Federal Register.**

FOR FURTHER INFORMATION CONTACT: Barbara Schuster, Regional Appeals Manager, Intermountain Region, 324 25th Street, Ogden, UT 84401, Phone (801) 625–5301.

SUPPLEMENTARY INFORMATION: The administrative appeal procedures 36 CFR 215 and 36 CFR 217, of the Forest Service require publication of legal notice in a newspaper of general circulation of all decisions subject to appeal. This newspaper publication of notices of decisions is in addition to direct notice to those who have requested notice in writing and to those known to be interested and affected by a specific decision.

The legal notice is to identify: the decision by title and subject matter; the date of the decision; the name and title of the official making the decision; and how to obtain copies of the decision. In addition, the notice is to state the date the appeal period begins which is the day following publication of the notice.

The timeframe for appeal shall be based on the date of publication of the notice in the first (principal) newspaper listed for each unit.

The newspapers to be used are as follows:

Regional Forester, Intermountain Region

For decisions made by the Regional Forester affecting National Forests in Idaho: *The Idaho Statesman,* Boise, Idaho

For decisions made by the Regional Forester affecting National Forests in Nevada: *The Reno Gazette-Journal,* Reno Nevada

For decisions made by the Regional Forester affecting National Forests in Wyoming: *Casper Star-Tribune,* Casper, Wyoming

For decisions made by the Regional Forester affecting National Forests in Utah: *Salt Lake Tribune*, Salt Lake City, Utah

If the decision made by the Regional Forester affects all National Forests in the Intermountain Region, it will appear in: *Salt Lake Tribune*, Salt Lake City, Utah

Ashley National Forest

Ashley Forest Supervisors decisions: *Vernal Express*, Vernal, Utah

Vernal District Ranger decisions: *Vernal Express*, Vernal, Utah

Flaming Gorge District Ranger for decisions affecting Wyoming: *Casper Star Tribune*, Casper, Wyoming

Flaming Gorge District Ranger for decisions affecting Utah: *Vernal Express*, Vernal, Utah

Roosevelt and Duchesne District Ranger decisions: *Uintah Basin Standard*, Roosevelt, Utah

Boise National Forest

Boise Forest Supervisor decisions: *The Idaho Statesman*, Boise, Idaho

Mountain Home District Ranger decisions: *The Idaho Statesman*, Boise, Idaho

Idaho City District Ranger decisions: *The Idaho Statesman*, Boise, Idaho

Cascade District Ranger decisions: *The Long Valley Advocate*, Cascade, Idaho

Lowman District Ranger decisions: *The Idaho World*, Garden Valley, Idaho

Emmett District Ranger decisions: *The Messenger-Index*, Emmett, Idaho

Bridger-Teton National Forest

Bridger-Teton Forest Supervisor decisions: *Casper Star-Tribune*, Casper, Wyoming

Jackson District Ranger decisions: *Casper Star-Tribune*, Casper, Wyoming

Buffalo District Ranger decisions: *Casper Star-Tribune*, Casper, Wyoming

Big Piney District Ranger decisions: *Casper Star-Tribune*, Casper, Wyoming

Pinedale District Ranger decisions: *Casper Star-Tribune*, Casper, Wyoming

Greys River District Ranger decisions: *Casper Star-Tribune*, Casper, Wyoming

Kemmerer District Ranger decisions: *Casper Star-Tribune*, Casper, Wyoming

Caribou-Targhee National Forest

Caribou-Targhee Forest Supervisor decisions for the Caribou portion: *Idaho State Journal*, Pocatello, Idaho

Soda Springs District Ranger decisions: *Idaho State Journal*, Pocatello, Idaho

Montpelier District Ranger decisions: *Idaho State Journal*, Pocatello, Idaho

Westside District Ranger decisions: *Idaho State Journal*, Pocatello, Idaho

Caribou-Targhee Forest Supervisor decisions for the Targhee Portion: *The Post Register,* Idaho Falls, Idaho

Dubois District Ranger decisions: *The Post Register,* Idaho Falls, Idaho

Island Park District Ranger decisions: *The Post Register,* Idaho Falls, Idaho

Ashton District Ranger decisions: *The Post Register,* Idaho Falls, Idaho

Palisades District Ranger decisions: *The Post Register,* Idaho Falls, Idaho

Teton Basin District Ranger decisions: *The Post Register,* Idaho Falls, Idaho

Dixie National Forest

Dixie Forest Supervisor decisions: *The Daily Spectrum,* St. George, Utah

Pine Valley District Ranger decisions: *The Daily Spectrum,* St. George, Utah

Cedar City District Ranger decisions: *The Daily Spectrum,* St. George, Utah

Powell District Ranger decisions: *The Daily Spectrum,* St. George, Utah

Escalante District Ranger decisions: *The Daily Spectrum,* St. George, Utah

Teasdale District Ranger decisions: *The Daily Spectrum,* St. George, Utah

Fishlake National Forest

Fishlake Forest Supervisor decisions: *Richfield Reaper,* Richfield, Utah

Loa District Ranger decisions: *Richfield Reaper,* Richfield, Utah

Richfield District Ranger decisions: *Richfield Reaper,* Richfield, Utah

Beaver District Ranger decisions: *Richfield Reaper,* Beaver, Utah

Fillmore District Ranger decisions: *Richfield Reaper,* Fillmore, Utah

Humboldt-Toiyabe National Forests

Humboldt-Toiyabe Forest Supervisor decisions for the Humboldt portion: *Elko Daily Free Press,* Elko, Nevada

Humboldt-Toiyabe Forest Supervisor decisions for the Toiyabe portion: *Reno Gazette-Journal,* Reno, Nevada

Sierra Ecosystem Coordination Center (SECO):

Carson District Ranger decisions: *Reno Gazette-Journal,* Reno, Nevada

Bridgeport District Ranger decisions: *The Review-Herald,* Mammoth Lakes, California

Spring Mountains National Recreation Area Ecosystem (SMNRAE):

Spring Mountains National Recreation Area District Ranger decisions: *Las Vegas Review Journal,* Las Vegas, Nevada

Central Nevada Ecosystem (CNECO):

Austin District Ranger decisions: *Reno Gazette-Journal,* Reno, Nevada

Tonopah District Ranger decisions: *Tonopah Times Bonanza-Goldfield News,* Tonopah, Nevada

Ely District Ranger decisions: *Ely Daily Times,* Ely, Nevada

Northeast Nevada Ecosystem (NNECO):

Mountain City District Ranger decisions: *Elko Daily Free Press*, Elko, Nevada

Ruby Mountains District Ranger decisions: *Elko Daily Free Press*, Elko, Nevada

Jarbidge District Ranger decisions: *Elko Daily Free Press*, Elko, Nevada

Santa Rosa District Ranger decisions: *Humboldt Sun*, Winnemucca, Nevada

Manti-LaSal National Forest

Manti-LaSal Forest Supervisor decisions: *Sun Advocate*, Price, Utah
Sanpete District Ranger decisions: *The Pyramid*, Mt. Pleasant, Utah
Ferron District Ranger decisions: *Emery County Progress*, Castle Dale, Utah
Price District Ranger decisions: *Sun Advocate*, Price, Utah
Moab District Ranger decisions: *The Times Independent*, Moab, Utah
Monticello District Ranger decisions: *The San Juan Record*, Monticello, Utah

Payette National Forest

Payette Forest Supervisor decisions: *Idaho Statesman*, Boise, Idaho
Weiser District Ranger decisions: *Signal American*, Weiser, Idaho
Council District Ranger decisions: *Council Record*, Council, Idaho
New Meadows, McCall, and Krassel District Ranger decisions: *Star News*, McCall, Idaho

Salmon-Challis National Forests

Salmon-Challis Forest Supervisor decisions for the Salmon portion: *The Recorder-Herald*, Salmon, Idaho
Salmon-Challis Forest Supervisor decisions for the Challis portion: *The Challis Messenger*, Challis, Idaho
North Fork District Ranger decisions: *The Recorder-Herald*, Salmon, Idaho
Leadore District Ranger decisions: *The Recorder-Herald*, Salmon, Idaho
Salmon/Cobalt District Ranger decisions: *The Recorder-Herald*, Salmon, Idaho
Middle Fork District Ranger decisions: *The Challis Messenger*, Challis, Idaho
Challis District Ranger decisions: *The Challis Messenger*, Challis, Idaho
Yankee Fork District Ranger decisions: *The Challis Messenger*, Challis, Idaho
Lost River District Ranger decisions: *The Challis Messenger*, Challis, Idaho

Sawtooth National Forest

Sawtooth Forest Supervisor decisions: *The Times News*, Twin Falls, Idaho
Burley District Ranger decisions:
Ogden Standard Examiner, Ogden, Utah, for those decisions on the Burley District involving the Raft River Unit.
South Idaho Press, Burley Idaho, for decisions issued on the Idaho portions of the Burley District
Twin Falls District Ranger decisions: *The Times News,* Twin Falls, Idaho
Ketchum District Ranger decisions: *Idaho Mountain Express,* Ketchum, Idaho
Sawtooth National Recreation Area: *Challis Messenger,* Challis, Idaho
Fairfield District Ranger Decisions: *The Times News,* Twin Falls, Idaho

Uinta National Forest

Uinta Forest Supervisor decisions: *The Daily Herald,* Provo, Utah
Pleasant Grove District Ranger decisions: *The Daily Herald,* Provo, Utah
Heber District Ranger decisions: *The Daily Herald,* Provo, Utah, and
Spanish Fork District Ranger decisions: *The Daily Herald,* Provo, Utah

Wasatch-Cache National Forest

Wasatch-Cache Forest Supervisor decisions: *Salt Lake Tribune,* Salt Lake City, Utah
Salt Lake District Ranger decisions: *Salt Lake Tribune,* Salt Lake City, Utah
Kamas District Ranger decisions: *Salt Lake Tribune,* Salt Lake City, Utah
Evanston District Ranger decisions: *Uintah County Herald,* Evanston, Wyoming
Mountain View District Ranger decisions: *Uintah County Herald,* Evanston, Wyoming
Ogden District Ranger decisions: *Ogden Standard Examiner,* Ogden, Utah
Logan District Ranger decisions: *Logan Herald Journal,* Logan, Utah

Dated: May 31, 2000.

Jack A. Blackwell,

Regional Forester.

[FR Doc. 00–14096 Filed 6–5–00; 8:45 am]

BILLING CODE 3410–11–M

DEPARTMENT OF AGRICULTURE

Forest Service

Douglas Project Area Environmental Impact Statement

AGENCY: Forest Service, USDA.

ACTION: Notice of intent to prepare an environmental impact statement.

SUMMARY: The Department of Agriculture, Forest Service, will prepare an Environmental Impact Statement (EIS) to provide a supply of timber for the Tongass National Forest timber sale program, to identify recreation opportunities and to develop a road management plan for the forest roads connected to the City of Kake. The Record of Decision will disclose where, if any, the Forest Service has decided to provide timber harvest units, associated timber harvesting facilities, identify dispersed recreation opportunities and propose any changes to the existing forest road system. The proposed action is to harvest timber on an estimated 1,600 acres and to provide multiple timber sale opportunities for a total of approximately 35 million board feet (mmbf) of timber. Timber harvest will be accomplished using a variety of silvicultural prescriptions and harvest methods to meet the standards and guidelines of the Tongass Forest Plan. This project would include the construction of up to 30 miles of road and may include one new log transfer facility (LTF) within the project area. This project may also include an analysis and decision for a nonsignificant amendment to the Forest Plan to revise the location of small Old Growth Reserve(s) within the project area. Recreational opportunities for enhancement may include dispersed sites for camping, and improved access for hunting and subsistence users. A road management plan will be developed to safely accommodate public traffic. A range of alternatives responsive to significant issues will be developed and will include a no-action alternative. The Douglas project area is approximately 95,500 acres in size and is located in Value Comparison Units 430, 431, 432, 433 and a portion of 429 on Kupreanof Island, Alaska, on the Petersburg Ranger District of the Tongass National Forest. The project area is within an Inventoried Roadless Area (South Kupreanof #214 as identified by the Tongass Land and Resource Management Plan).

DATES: Comments concerning the scope of this project should be received by July 7, 2000 (30 days from expected publication).

ADDRESSES: Please send written comments to the Petersburg Ranger District, Tongass National Forest; Attn: Dan McMahon; Douglas Project Area EIS; PO Box 1328; Petersburg, AK 99833. The FAX number is (907) 772–5995.

FOR FURTHER INFORMATION CONTACT: Questions about the proposal and EIS should be directed to Patricia Grantham, District Ranger, Petersburg Ranger District, Tongass National Forest, PO Box 1328, Petersburg, AK 99833; telephone (907) 772–3871 or Dan McMahon, Interdisciplinary Team Leader, Petersburg Ranger District, PO Box 1328, Petersburg, AK 99833; telephone (907) 772–3871.

SUPPLEMENTARY INFORMATION: Public participation has been an integral component of the study process and will be especially important at several points during the analysis. During the last year, the Forest Service has been seeking information, comments, and assistance from Federal, State, and local agencies Federally-recognized Indian tribes, and individuals and organizations that may be interested in, or affected by, the proposed activities. Written scoping comments have been solicited through an informal scoping

package that was sent to the project mailing list and available at open houses in Petersburg and Kake, Alaska. The scoping process includes: (1) Identification of potential issues; (2) identification of issues to be analyzed in depth; and (3) elimination of insignificant issues or those which have been covered by a previous environmental review. For the Forest Service to best use the scoping input, comments should be received by July 7, 2000 (30 days from expected publication).

Based on results of scoping and the resource capabilities within the project area, alternatives including a ''no action'' alternative will be developed for the Draft Environmental Impact Statement. The Draft Environmental Impact Statement is projected to be filed with the Environmental Protection Agency (EPA) in the summer of 2000. Subsistence hearings as provided for in Title VIII, Section 810 of the Alaska National Interest Lands Conservation Act (ANILCA), will occur, if necessary, during the comment period on the Draft Environmental Impact Statement. The Final Environmental Impact Statement and Record of Decision are anticipated to be published in March, 2001.

The comment period on the Draft Environmental Impact Statement will be 45 days from the date the Environmental Protection Agency publishes the notice of availability in the **Federal Register**.

The Forest Service believes, at this early stage, it is important to give reviewers notice of several court rulings related to public participation in the environmental review process. First, reviewers of Draft Environmental Impact Statements must structure their participation in the environmental review of the proposal so that it is meaningful and alerts an agency to the reviewer's position and contentions. *Vermont Yankee Nuclear Power Corp.* v. *NRDC,* 435 U.S. 519, 553, (1978). Environmental objections that could have been raised at the Draft Environmental Impact Statement stage may be waived or dismissed by the courts. *City of Angoon* v. *Hodel*, 803 F.2nd 1016, 1022 (9th Cir. 1986) and *Wisconsin Heritages, Inc.* v. *Harris,* 490 F. Supp. 1334 (E.D. Wis. 1980). Because of these court rulings, it is very important that those interested in this proposed action participate by the close of the 45-day comment period so that substantive comments and objections are made available to the Forest Service at a time when it can meaningfully consider them and respond to them in the Final Environmental Impact Statement.

To assist the Forest Service in identifying and considering issues and concerns of the proposed action, comments during scoping and comments on the Draft Environmental Impact Statement should be as specific as possible. It is also helpful if comments refer to specific pages or chapters of the Draft Environmental Impact Statement. Comments may also address the adequacy of the Draft Environmental Impact Statement or the merits of the alternatives formulated and discussed in the statement. Reviewers may wish to refer to the Council on Environmental Quality Regulations for implementing the procedural provisions of the National Environmental Policy Act at 40 CFR 1503.3 in addressing these points. Comments received in response to this solicitation, including names and addresses of those who comment, will be considered part of the public record on this proposed action and will be available for public inspection. Comments submitted anonymously will be accepted and considered; however, those who submit anonymous comments will not have standing to appeal the subsequent decision under 36 CFR Parts 215 or 217. Additionally, pursuant to 7 CFR 1.27(d), any person may request the agency to withhold a submission from the public record by showing how the Freedom of Information Act (FOIA) permits such confidentiality. Requesters should be aware that, under FOIA, confidentiality may be granted in only very limited circumstances, such as to protect trade secrets. The Forest Service will inform the requester of the agency's decision regarding the request for confidentiality, and where the request is denied, the agency will return the submission and notify the requester that the comments may be resubmitted with or without name and address within 7 days.

Permits required for implementation include the following:

1. U.S. Army Corps of Engineers.

—Approval of discharge of dredged or fill material into the waters of the United States under Section 404 of the Clean Water Act;

—Approval of the construction of structures or work in navigable waters of the United States under Section 10 of the Rivers and Harbors Act of 1899;

2. Environmental Protection Agency

—National Pollutant Discharge Elimination System (402) Permit;

—Review Spill Prevention Control and Countermeasure Plan;

3. State of Alaska, Department of Natural Resources

—Tideland Permit and Lease or Easement;

4. State of Alaska, Department of Environmental Conservation

—Solid Waste Disposal Permit;

—Certification of Compliance with Alaska Water Quality Standards (401 Certification)

Responsible Official: Carol Jorgensen, Assistant Forest Supervisor, Tongass National Forest, PO Box 309, Petersburg, Alaska 99833, is the responsible official. The responsible official will consider the comments, response, disclosure of environmental consequences, and applicable laws, regulations, and policies in making the decision and stating the rationale in the Record of Decision.

Dated: May 22, 2000.

Carol J. Jorgensen,

Assistant Forest Supervisor.

[FR Doc. 00–14065 Filed 6–5–00; 8:45 am]

BILLING CODE 3410–11–M

DEPARTMENT OF AGRICULTURE

Natural Resources Conservation Service

Black Bayou Culverts Hydrologic Restoration Project (CS–29), Calcasieu Parish, LA

AGENCY: Natural Resources Conservation Service.

ACTION: Notice of finding of no significant impact.

SUMMARY: Pursuant to section 102(2)(c) of the National Environmental Policy Act of 1969; the Council on Environmental Quality Regulations (40 CFR Part 1500); and the Natural Resources Conservation Service Regulation (7 CFR Part 650); the Natural Resources Conservation Service, U.S. Department of Agriculture, gives notice that an environmental impact statement is not being prepared for the Black Bayou Culverts Hydrologic Restoration Project (CS–29), Calcasieu Parish, Louisiana.

FOR FURTHER INFORMATION CONTACT: Donald W. Gohmert, State Conservationist, Natural Resources Conservation Service, 3737 Governmental Street, Alexandria, Louisiana, 71302, telephone (318) 473–7751.

SUPPLEMENTARY INFORMATION: The environmental assessment of this federally assisted action indicates that the project will not cause significant local, regional, or national impacts on the environment. As a result of these findings, Donald W. Gohmert, State Conservationist, has determined that the preparation and review of an environmental impact statement are not needed for this project.

The project consists of the installation of a set of culverts under Highway 384 at its intersection of Black Bayou. The culverts would re-establish a hydrologic connection in Black Bayou at Highway 384 to help give relieve to high water conditions within the fresh water marsh basin.

The Notice of a Finding of No Significant Impact (FONSI) has been forwarded to the Environmental Protection Agency and to various federal, state, and local agencies and interested parties. A limited number of copies of the FONSI are available to fill single copy requests at the above address. Basic data developed during the environmental assessment are on file and may be reviewed by contacting Bruce Lehto, Assistant State Conservationist/Water Resources, Natural Resources Conservation Service, 3737 Government Street, Alexandria, Louisiana 71302, telephone (318) 473–7756.

No administrative action on implementation of the proposal will be taken until 30 days after the date of this publication in the **Federal Register**.

(This activity is listed in the Catalog of Federal Domestic Assistance under NO.10.904, Watershed Protection and Flood Prevention, and is subject to the provision of Executive Order 12372, which requires intergovernmental consultation with State and local officials.)

Dated: May 24, 2000.

Donald W. Gohmert,

State Conservationist.

[FR Doc. 00–14066 Filed 6–5–00; 8:45 am]

BILLING CODE 3410–16–M

DEPARTMENT OF COMMERCE

International Trade Administration

[A–580–812]

Dynamic Random Access Memory Semiconductors of One Megabit or Above From the Republic of Korea: Preliminary Results of Antidumping Duty Administrative Review and Notice of Intent Not To Revoke Order in Part

AGENCY: Import Administration, International Trade Administration, Department of Commerce.

ACTION: Notice of Preliminary Results of Antidumping Duty Administrative Review and Notice of Intent Not to Revoke Order in Part.

SUMMARY: In response to requests from one manufacturer/exporter and one U.S. producer of the subject merchandise, the Department of Commerce (''the Department'') is conducting an administrative review of the antidumping duty order on dynamic random access memory semiconductors of one megabit or above (''DRAMs'') from the Republic of Korea (''Korea''). The review covers two manufacturers/exporters and four resellers of subject merchandise to the United States during the period of review (''POR''), May 1, 1998 through April 30, 1999. Based upon our analysis, the Department has preliminarily determined that dumping margins exist for both manufacturers/exporters and the four resellers during the POR. If these preliminary results are adopted in our final results of administrative review, we will instruct the United States Customs Service (''Customs'') to assess antidumping duties as appropriate. Interested parties are invited to comment on these preliminary results. Parties who submit arguments in this proceeding are requested to submit with the argument (1) a statement of the issue, and (2) a brief summary of the argument.

EFFECTIVE DATE: June 6, 2000.

FOR FURTHER INFORMATION CONTACT: Alexander Amdur or John Conniff, AD/CVD Enforcement, Group II, Office 4, Import Administration, International Trade Administration, U.S. Department of Commerce, 14th and Constitution Avenue, N.W., Washington, D.C. 20230; telephone: (202) 482–5346 or (202) 482–1009, respectively.

SUPPLEMENTARY INFORMATION:

Applicable Statute and Regulations

Unless otherwise stated, all citations to the Tariff Act of 1930, as amended (''the Act''), are references to the provisions as of January 1, 1995, the effective date of the amendments made to the Act by the Uruguay Round Agreements Act (''URAA''). In addition, unless otherwise indicated, all references to the regulations of the Department are to 19 CFR part 351 (1999).

Background

On May 10, 1993, the Department published in the **Federal Register** (58 FR 27250) the antidumping duty order on DRAMs from Korea. On May 28, 1999, the petitioner, Micron Technology Inc., (''Micron'') requested an administrative review of Hyundai Electronics Industries Co., Ltd. (''Hyundai'') and LG Semicon Co., Ltd. (''LG''), Korean manufacturers of DRAMs, and four Korean resellers of DRAMs, the G5 Corporation (''G5''), Kim's Marketing, Jewon Trading (''Jewon''), and Wooyang Industry Co., Ltd. (''Wooyang''), for the period May 1, 1998 through April 30, 1999. Additionally, the petitioner requested a cost investigation of LG and Hyundai pursuant to section 773(b) of the Act. On May 28, 1999, LG requested that the Department conduct a review of its exports of the subject merchandise to the United States. On May 28, 1999, LG also submitted a timely request that the order be revoked with respect to LG. LG based its revocation request on its appeal of the Department's inclusion of unreported sales in the fourth review which, LG claimed, if successful, would result in a *de minimis* margin in the fourth review for LG; and the final results of the fifth review, which had not been issued at the time of LG's revocation request. On June 30, 1999 (64 FR 35124), the Department initiated an administrative review of Hyundai, LG, G5, Kim's Marketing, Jewon, and Wooyang, including cost investigations of Hyundai and LG, covering the POR. On November 17, 1999, Micron submitted a request for postponement of the preliminary results. On December 20, 1999, the Department published in the **Federal Register** (64 FR 7111) a notice extending the time for the preliminary results from January 30, 2000, until May 30, 2000. The Department is conducting this review in accordance with section 751 of the Act.

Scope of the Review

Imports covered by the review are shipments of DRAMs from Korea. Included in the scope are assembled and unassembled DRAMs. Assembled DRAMs include all package types. Unassembled DRAMs include processed wafers, uncut die, and cut die. Processed wafers produced in Korea, but packaged or assembled into memory modules in a third country, are included in the scope; wafers produced in a third country and assembled or packaged in Korea are not included in the scope.

The scope of this review includes memory modules. A memory module is a collection of DRAMs, the sole function of which is memory. Modules include single in-line processing modules (''SIPs''), single in-line memory modules (''SIMMs''), or other collections of DRAMs, whether unmounted or mounted on a circuit board. Modules that contain other parts that are needed to support the function of memory are covered. Only those modules which contain additional items which alter the function of the module to something other than memory, such as video graphics adapter (''VGA'') boards and cards, are not included in the scope. The scope of this review also includes video random access memory semiconductors (''VRAMS''), as well as any future packaging and assembling of DRAMs; and, removable memory

modules placed on motherboards, with or without a central processing unit (''CPU''), unless the importer of motherboards certifies with the Customs Service that neither it nor a party related to it or under contract to it will remove the modules from the motherboards after importation. The scope of this review does not include DRAMs or memory modules that are reimported for repair or replacement.

The DRAMS and modules subject to this review are currently classifiable under subheadings 8471.50.0085, 8471.91.8085, 8542.11.0024, 8542.11.8026, 8542.13.8034, 8471.50.4000, 8473.30.1000, 8542.11.0026, 8542.11.8034, 8471.50.8095, 8473.30.4000, 8542.11.0034, 8542.13.8005, 8471.91.0090, 8473.30.8000, 8542.11.8001, 8542.13.8024, 8471.91.4000, 8542.11.0001, 8542.11.8024 and 8542.13.8026 of the Harmonized Tariff Schedule of the United States (''HTSUS''). Although the HTSUS subheadings are provided for convenience and customs purposes, the Department's written description of the scope of this review remains dispositive.

Intent Not To Revoke

LG submitted a request that the order be partially revoked with respect to itself pursuant to 19 CFR 351.222(e)(1). Under the Department's regulations, the Department may revoke an order, in part, if the Secretary concludes that, among other things: (1) ''[o]ne or more exporters or producers covered by the order have sold the merchandise at not less than normal value for a period of at least three consecutive years''; (2) ''[i]t is not likely that those persons will in the future sell the merchandise at less than normal value''; and (3) ''the exporter or producer agrees in writing to its immediate reinstatement in the order, as long as any exporter or producer is subject to the order, if the Secretary concludes that the exporter or producer, subsequent to the revocation, sold the merchandise at less than normal value.'' *See* 19 CFR 351.222(b)(2). In this case, LG does not meet the first criterion for revocation. In the two previous segments of this proceeding, the Department found that LG sold subject merchandise at less than normal value. *See Dynamic Random Access Memory Semiconductors of One Megabit or Above from the Republic of Korea,* 63 FR 50867 (September 23, 1998) (''*Final Results 1998*'') and *Dynamic Random Access Memory Semiconductors (DRAMs) of One Megabit or Above from the Republic of Korea,* 64 FR 69694 (December 14, 1999) (''*Final Results 1999*''). Since LG has not met the first criterion for revocation, *i.e.*, zero or *de minimis* margins for three consecutive reviews, the Department need not reach a conclusion with respect to the second and third criteria. Therefore, on this basis, we have preliminarily determined not to revoke the Korean DRAM antidumping duty order with regard to LG.

Verification

As provided in section 782(i) of the Act, we verified information provided by LG and Hyundai. We used standard verification procedures, including on-site inspection of the respondents' facilities, examination of relevant sales, financial, and/or cost records, and selection of original documentation containing relevant information. G5, Jewon, Kim's Marketing and Wooyang were not verified because the companies did not respond to the Department's questionnaires.

Facts Available (''FA'')

1. Application of FA

Section 776(a)(2) of the Act provides that if any interested party: (A) withholds information that has been requested by the Department; (B) fails to provide such information in a timely manner or in the form or manner requested; (C) significantly impedes an antidumping investigation; or (D) provides such information but the information cannot be verified, the Department shall use facts otherwise available in making its determination.

On July 8, 1999, the Department sent Hyundai, LG, G5, Jewon, Kim's Marketing and Wooyang questionnaires requesting that they provide information regarding any sales that they made to the United States during the POR. We did not receive any replies from G5, Jewon, Kim's Marketing or Wooyang.

On March 3, 2000, the Department sent letters informing G5, Jewon, Kim's Marketing and Wooyang that not responding to the Department's questionnaires could result in a determination based on FA. We did not receive any replies from the four companies.

Because G5, Jewon, Kim's Marketing and Wooyang have failed to respond to our questionnaires, pursuant to section 776(a) of the Act, we have applied FA to calculate their dumping margins.

2. Selection of Adverse FA

Section 776(b) of the Act provides that, in selecting from the facts available, adverse inferences may be used against a party that failed to cooperate by not acting to the best of its ability to comply with requests for information. *See also* Statement of Administrative Action (''SAA'') accompanying the URAA, H.R. Doc. No. 316, 103d Cong., 2d Sess. 870 (1994).

Section 776(b) states further that an adverse inference may include reliance on information derived from the petition, the final determination, the final results of prior reviews, or any other information placed on the record. *See also Id.* at 868. In addition, the SAA establishes that the Department may employ an adverse inference ''to ensure that the party does not obtain a more favorable result by failing to cooperate than if it had cooperated fully.'' *See* SAA at 870. In employing adverse inferences, the SAA instructs the Department to consider ''the extent to which a party may benefit from its own lack of cooperation.'' *Id.*

Because G5, Jewon, Kim's Marketing and Wooyang did not cooperate by complying with our request for information, and in order to ensure that they do not benefit from their lack of cooperation, we are employing an adverse inference in selecting from among the facts otherwise available. The Department's practice when selecting an adverse FA rate from among the possible sources of information has been to ensure that the margin is sufficiently adverse so ''as to effectuate the purpose of the FA rule to induce respondents to provide the Department with complete and accurate information in a timely manner.'' *See Static Random Access Memory Semiconductors From Taiwan; Final Determination of Sales at Less Than Fair Value,* 63 FR 8909, 8932 (February 23, 1998).

In order to ensure that the rate is sufficiently adverse so as to induce future cooperation from G5, Jewon, Kim's Marketing and Wooyang, we have assigned these companies, as adverse FA, the highest calculated margin from any segment of this proceeding, 10.44 percent, which is the rate calculated for Hyundai in the fifth administrative review. *See Final Results 1999.*

Information from prior segments of the proceeding, such as involved here, constitutes ''secondary information'' under section 776(c) of the Act. Section 776(c) of the Act provides that the Department shall, to the extent practicable, corroborate secondary information used for FA by reviewing independent sources reasonably at its disposal. The SAA provides that to ''corroborate'' means simply that the Department will satisfy itself that the secondary information to be used has probative value. *See* SAA at 870. As noted in *Tapered Roller Bearings and Parts Thereof, Finished and Unfinished,*

from Japan, and Tapered Roller Bearings, Four Inches or Less in Outside Diameter, and Components Thereof, from Japan; Preliminary Results of Antidumping Duty Administrative Reviews and Partial Termination of Administrative Reviews, 61 FR 57391, 57392 (November 6, 1996) (''*TRBs*''), to corroborate secondary information, the Department will, to the extent practicable, examine the reliability and relevance of the information used. However, unlike other types of information, such as input costs or selling expenses, there are no independent sources from which the Department can derive calculated dumping margins; the only source for margins is administrative determinations. Thus, in an administrative review, if the Department chooses as total adverse FA a calculated dumping margin from a prior segment of the proceeding, it is not necessary to question the reliability of the margin for that time period.

As to the relevance of the margin used for adverse FA, the Department stated in *TRBs* that it will ''consider information reasonably at its disposal as to whether there are circumstances that would render a margin irrelevant. Where circumstances indicate that the selected margin is not appropriate as adverse FA, the Department will disregard the margin and determine an appropriate margin.'' *Id.; see also Fresh Cut Flowers from Mexico; Preliminary Results of Antidumping Duty Administrative Review,* 60 FR 49567 (February 22, 1996), where we disregarded the highest margin in the case as best information available because the margin was based on another company's uncharacteristic business expense resulting in an extremely high margin.

As stated above, the highest rate determined in any prior segment of the proceeding is 10.44 percent, a calculated rate from *Final Results 1999.*

In the absence of information on the administrative record that application of the 10.44 percent rate to G5, Jewon, Kim's Marketing and Wooyang would be inappropriate as an adverse FA rate in the instant review, that the margin is not relevant, or that leads us to re-examine this rate as adverse facts available in the instant review, we have applied, as FA, the 10.44 percent margin from a prior administrative review of this order, and have satisfied the corroboration requirements under section 776(c) of the Act.

Third Country Transshipments

In the fourth and fifth administrative reviews of this proceeding, we determined that LG had knowledge, or should have had knowledge, that a substantial amount of its sales to third country customers were destined for the United States. *See Final Results 1998* and *Final Results 1999.* Furthermore, during the current review, the petitioner made several allegations that Hyundai's and LG's affiliates in other countries, such as Hong Kong, made sales during the POR to companies that shipped the merchandise to the United States. Consequently, we requested information from Hyundai and LG about their third country sales during the POR and, for the first time, conducted verifications of Hyundai's and LG's Hong Kong affiliates.

LG did not report the requested third country sales through an affiliated party. However, LG subsequently provided clarifying information about these sales. As a result of this clarification, we have made no adjustment for these sales. For further discussion, *See Memorandum on LG's Third Country Sales* dated May 30, 2000.

We also have made no adjustments in this review for Hyundai's or LG's reported third country sales because we did not find evidence that Hyundai or LG had knowledge, or should have had knowledge, that any of their sales to third country customers were destined for the United States. In the future, we intend to continue to closely monitor any transshipments of Korean DRAMs to the United States from all countries, and will particularly scrutinize transshipments of Korean DRAMs through Hong Kong.

Fair Value Comparisons

To determine whether sales of DRAMs from Korea to the United States were made at less than fair value (''LTFV''), we compared the constructed export price (''CEP'') to the normal value (''NV''), as described in the CEP and NV sections of this notice, below. In accordance with section 771(16) of the Act, we considered all products as described in the ''Scope of Review'' section of this notice, above, that were sold in the home market in the ordinary course of trade for purposes of determining appropriate product comparisons to U.S. sales. Where there were no sales of the identical or the most similar merchandise in the home market that were suitable for comparison, we compared U.S. sales to sales of the next most similar foreign like product, based on the characteristics listed in Section B and C of our antidumping questionnaire.

CEP

For Hyundai and LG, in calculating United States price, the Department used CEP, as defined in section 772(b) of the Act, because the merchandise was first sold to an unaffiliated U.S. purchaser after importation. We calculated CEP based on delivered prices to unaffiliated customers in the United States.

We made deductions from the starting price, where appropriate, for discounts, rebates, billing adjustments, foreign and U.S. brokerage and handling, foreign inland insurance, export insurance, air freight, air insurance, U.S. warehousing expense, U.S. duties and direct and indirect selling expenses to the extent that they are associated with economic activity in the United States in accordance with sections 772(c)(2) and 772(d)(1) of the Act. These deductions included credit expenses and commissions, as applicable, and inventory carrying costs incurred by the respondents' U.S. subsidiaries. We added duty drawback received on imported materials, where applicable, pursuant to section 772(c)(1)(B) of the Act.

For both respondents, for DRAMs that were further manufactured into memory modules after importation, we deducted all costs of further manufacturing in the United States, pursuant to section 772(d)(2) of the Act. These costs consisted of the costs of the materials, fabrication, and general expenses associated with further manufacturing in the United States. Pursuant to section 772(d)(3) of the Act, we also reduced the CEP by the amount of profit allocated to the expenses deducted under section 772(d)(1) and (2).

We corrected for certain clerical errors found during verification, including corrections that Hyundai and LG identified in their responses in the course of preparing for verification.

Level of Trade (''LOT'')

In accordance with section 773(a)(1)(B) of the Act, to the extent practical, we determined NV based on sales in the comparison market at the same LOT as the CEP sales. The NV LOT is that of the starting-price sales in the comparison market or, when NV is based on constructed value (CV), that of the sales from which we derive selling, general, and administrative (SG&A) expenses and profit. For CEP, it is the level of the constructed sale from the exporter to the importer.

To determine whether NV sales are at a different LOT than the CEP sales, we examined stages in the marketing process and selling activities along the chain of distribution between the producer and the unaffiliated customer. If the comparison-market sales are at a different LOT, and the difference affects

price comparability, as manifested in a pattern of consistent price differences between the sales on which NV is based and comparison-market sales at the LOT of the export transaction, we make a LOT adjustment under section 773(a)(7)(A) of the Act. Finally, for CEP sales, if the NV level is more remote from the factory than the CEP level and there is no basis for determining whether the difference in the levels between NV and CEP affects price comparability, we adjust NV under section 773(a)(7)(B) of the Act (the CEP offset provision). *See Notice of Final Determination of Sales at Less Than Fair Value: Certain Cut-to Length Carbon Steel Plate from South Africa,* 62 FR 61731 (November 19, 1997).

We reviewed the questionnaire responses of Hyundai and LG to establish whether there were sales at different LOTs based on the distribution system, selling activities, and services offered to each customer or customer category. For both respondents, we identified one LOT in the home market with direct sales by the parent corporation to the domestic customer. These direct sales were made by both respondents to original equipment manufacturers (''OEMs'') and to distributors. In addition, all sales, whether made to OEM customers or to distributors, included the same selling functions. For the U.S. market, all sales for both respondents were reported as CEP sales. The LOT of the U.S. sales is determined for the sale to the affiliated importer rather than the resale to the unaffiliated customer. We examined the selling functions performed by the Korean companies for U.S. CEP sales (as adjusted) and preliminarily determine that they are at a different LOT from the Korean companies' home market sales because the companies' CEP transactions were at a less advanced stage of marketing. For instance, at the CEP level, the Korean companies did not engage in any general promotion activities, marketing functions, or price negotiations for U.S. sales. Because we compared CEP sales to home market sales at a more advanced LOT, we examined whether a LOT adjustment may be appropriate. In this case, both respondents only sold at one LOT in the home market. Therefore, there is no basis upon which either respondent can demonstrate a pattern of consistent price differences between levels of trade. Further, we do not have information which would allow us to examine pricing patterns based on the respondents' sales of other products and there is no other record information on which such an analysis could be based. Because the data available do not provide an appropriate basis for making a LOT adjustment and the LOT in the home market is at a more advanced stage of distribution than the LOT of the CEP sales, a CEP offset is appropriate. Both respondents claimed a CEP offset. We applied the CEP offset to adjusted home market prices or CV, as appropriate. The CEP offset consisted of an amount equal to the lesser of the weighted-average U.S. indirect selling expenses and U.S. commissions or home market indirect selling expenses. *See* the Memorandum on LOT for LG, dated May 30, 2000, and Memorandum on LOT for Hyundai, dated May 30, 2000.

NV

Home Market Viability

In order to determine whether there were sufficient sales of DRAMs in the home market to serve as a viable basis for calculating NV, we compared the respondents' volume of home market sales of the foreign like product to the volume of U.S. sales of the subject merchandise, in accordance with section 773(a)(1)(C) of the Act. Because the aggregate volume of home market sales of the foreign like products for both Hyundai and LG was greater than five percent of the respective aggregate volume of U.S. sales of the subject merchandise, we determined that the home market provides a viable basis for calculating NV for all respondents.

Cost of Production (''COP'')

We disregarded Hyundai's and LG's sales found to have been made below the COP in *Final Results 1998,* the most recent segment of this proceeding for which final results were available at the time of the initiation of this review. Accordingly, the Department, pursuant to section 773(b) of the Act, initiated COP investigations of both respondents for purposes of this administrative review.

We calculated the COP based on the sum of the costs of materials and fabrication employed in producing the foreign like product, SG&A expenses, and the cost of all expenses incidental to placing the foreign like product in condition, packed, ready for shipment, in accordance with section 773(b)(3) of the Act. We compared weighted-average quarterly COP figures for each respondent, adjusted where appropriate (see below), to home market sales of the foreign like product, as required under section 773(b) of the Act, in order to determine whether these sales had been made at prices below the COP. In determining whether to disregard home market sales made at prices below the COP, we examined whether such sales were made (1) within an extended period of time in substantial quantities, and (2) at prices which permitted the recovery of all costs within a reasonable period of time in the normal course of trade, in accordance with sections 773(b)(1)(A) and (B) of the Act. In accordance with section 773(b)(2)(D) of the Act, we conducted the recovery of cost test using annual cost data.

Pursuant to section 773(b)(2)(C)(i) of the Act, where less than 20 percent of home market sales of a given model were at prices less than the COP, we did not disregard any below-cost sales of that model because the below-cost sales were not made in ''substantial quantities.'' Where 20 percent or more of a respondent's sales of a given product were at prices below the COP, we found that sales of that model were made in ''substantial quantities'' within an extended period of time, in accordance with section 773(b)(2)(B) and (C) of the Act. To determine whether prices provided for recovery of costs within a reasonable period of time, we tested whether the prices which were below the per-unit cost of production at the time of the sale were also below the weighted-average per-unit cost of production for the POR, in accordance with section 773(b)(2)(D) of the Act. If they were, we disregarded the below-cost sales in determining NV.

We found that for both respondents, more than 20 percent of their home market sales for certain products were made at prices that were less than the COP. Furthermore, the prices did not permit the recovery of costs within a reasonable period of time. We, therefore, disregarded the below-cost sales and used the remaining above-cost sales as the basis for determining NV, in accordance with section 773(b)(1). For those sales for which there were no comparable home market sales in the ordinary course of trade, we compared CEP to CV pursuant to section 773(a)(4) of the Act.

Adjustments to COP

Research & Development (''R&D'')

Consistent with our past practice in this case, the R&D element of COP was based on R&D expenses related to all semiconductor products, not product-specific expenditures. *See, e.g., Final Results 1999*, 64 FR at 69701–69702.

In addition, Hyundai and LG, in 1998, completely deferred certain R&D costs and amortized other R&D costs over five years using the straight-line method. This is the same methodology for recognizing R&D costs that Hyundai and

LG began to use in 1997, after previously expensing all R&D costs as incurred (except for Hyundai, which began to defer certain R&D costs in 1996). Both Hyundai and LG based the R&D expenses that they reported to the Department for this POR on the amount of R&D costs that they expensed in 1998.

Section 773(f)(1)(A) of the Act directs the Department to rely on ''the records of the exporter or producer of the merchandise, if such records are kept in accordance with the GAAP of the exporting country (or the producing country where appropriate) and reasonably reflect the costs associated with production and sale of the merchandise.'' Section 773(f)(1)(A) of the Act also states that the Department will consider whether ''such allocations have been historically used by the exporter or the producer.'' Hyundai's and LG's methodology for recognizing R&D costs is in accordance with Korean GAAP. However, the legacy of Hyundai's and LG's inconsistency in R&D accounting practices continues to distort the cost calculation for antidumping purposes, in a similar manner to the distortions that we noted in 1997 in the fifth administrative review. *See Final Results 1999*, 64 FR at 69696–69700.

Hyundai and LG have repeatedly changed their accounting method for R&D expenses throughout the course of these proceedings (*i.e.*, from capitalizing and amortizing, to expensing in the year incurred, and now back to capitalizing and amortizing). When Hyundai and LG do not consistently expense or amortize R&D costs, they will recognize, in relation to amounts that would be recognized if either method was constantly applied, aberrationally high amounts of R&D expense in some years, and aberrationally low amounts of R&D expense in other years, that do not reasonably reflect the costs of producing the subject merchandise. In 1998, as in 1997, Hyundai and LG, as a consequence of their change in accounting methods for R&D costs in 1997, in only their second consecutive year of amortizing R&D costs, recognized, and reported to the Department, an aberrationally low amount of R&D expenses.

Also in 1998, as in 1997, Hyundai and LG completely deferred R&D costs for certain long-term projects until they realize revenues from these projects, or until they foresee no possibility of realizing revenue from these projects. This practice exacerbates the low level of R&D expenses that the respondents recognize in relation to the amount of expenses actually incurred. As we found in *Final Results 1999*, 64 FR at 69699, we find that, for dumping purposes, this methodology does not reasonably reflect the cost of producing the subject merchandise.

The Court of International Trade, in *Micron Technology* v. *United States*, Slip Op. 99–51 (June 16, 1999), at 6, specifically stated that ''the object of the cost of production exercise is . . . to capture . . . those expenses that reasonably and accurately reflect a respondent's actual production costs for period of review.'' However, as a result of their recent change to amortizing and deferring R&D expenses, Hyundai and LG are not capturing those expenses that reasonably and accurately reflect their actual R&D costs for this POR. Rather, because of their change in R&D accounting methodologies, their latest method of capitalization of R&D produces a distorted and meaningless (for the cost of production exercise) result that does not reasonably reflect the actual cost of producing the subject merchandise.

We have therefore determined that it is appropriate to recognize for antidumping purposes all of Hyundai's and LG's 1998 current R&D costs incurred in order to reasonably and accurately reflect their actual R&D costs for a given year. The Department also continues to believe that, in general, recognizing the current year's R&D costs incurred is a reasonable method to recognize R&D expenses. This methodology is consistent with both Korean and U.S. GAAP, and is the same methodology that Hyundai and LG had followed prior to 1997.

Foreign Translation Gains & Losses

In 1998, both Hyundai and LG changed how they recognized their long-term foreign currency translation gains and losses. In 1998, Hyundai and LG recognized all of their long-term translation gains and losses, while in 1997, the previous year, they had capitalized such gains and losses and amortized the amounts over the lives of the corresponding liabilities. In addition, in 1998, these two companies offset the vast majority of their respective consolidated deferred translation losses (part of which were due to be expensed in 1998) with the revaluation increment from the revaluation of their physical assets. The revaluation increment is an equity type adjustment on the statement of retained earnings. As a result, the deferred translation losses are never reflected on the companies' income statement. While these accounting changes are in accordance with Korean GAAP, the Department considers the new accounting treatment of these gains and losses to be distortive.

Hyundai's and LG's changed treatment of their long-term translation gains and losses results in the diminution of the impact of their translation losses, and the exaggeration of the impact of their translation gains. In 1997, Hyundai and LG incurred significant long-term translation losses when the Korean Won dropped precipitously. By offsetting much of these translation losses in 1998 with the revaluation increment, Hyundai and LG avoided recognizing almost all of the deferred losses from 1997, while still recognizing gains (including deferred gains from 1997) in 1998 on those same liabilities that experienced the 1997 losses. In addition, by switching from amortizing over the life of the liabilities in 1997, to expensing as incurred in 1998, when Hyundai and LG experienced net long-term translation gains, Hyundai and LG heightened the impact of those 1998 gains by recognizing all of the gains immediately.

In order to neutralize the effect of the changed treatment of the long-term translation gains and losses, we consider it appropriate to amortize all long-term translation gains and losses over the life of the loans. This treatment is consistent with Hyundai's and LG's accounting treatment in 1997, and is the same method the Department followed in the fourth administrative review covering 1996, when both Hyundai and LG did not recognize in their income statements any of their long-term translation gains and losses. *See Final Results 1998*, 63 FR at 50872.

Hyundai, for the first time in 1997, and again in 1998, capitalized in its construction in progress (''CIP'') account a part of its long-term translation gains and losses. LG also capitalized in its CIP account a part of its long-term translation gains and losses in 1997 and 1998. The Department considers this distortive, since the gains and losses generated by the same debt are amortized over different periods (the life of the corresponding financial liabilities and, for the part capitalized to CIP, the life of physical assets). We therefore included the capitalized translation gains and losses in the amount of translation gains and losses that we amortized over the life of the loans.

Depreciation

Hyundai and LG, in another accounting change in 1998, increased the useful lives over which they depreciate certain assets. Our practice, pursuant to section 773(f)(1)(A) of the Act and the SAA at 834, is to use those accounting methods and practices that

respondents have historically used. As this is the sixth review of this order, we do not consider it appropriate for the respondents to dramatically change the useful lives of their assets for antidumping purposes. We find that the useful lives that both Hyundai and LG adopted for certain assets in 1998 greatly exceed the useful lives that they have employed for these assets in the past. This is the second time since 1996 that the respondents have extended the useful lives of their assets. While the Department accepted the respondents' 1996 minor useful life adjustment (*see Final Results 1998*, 63 FR at 50870–50871), the useful lives that Hyundai and LG adopted in 1998 are in some instances greater than fifty percent longer than the previous useful lives. Moreover, we do not believe that the useful lives Hyundai and LG previously employed were unreasonable, especially considering that these two companies themselves argued that the previous useful lives were reasonable in *Final Results 1998*. We therefore adjusted Hyundai's and LG's reported depreciation expense using the pre-1998 useful lives.

Company-Specific Adjustments

Hyundai

1. We adjusted Hyundai's reported interest expense rate by recalculating the long-term translation gains and losses, as explained above, and excluding offsets of long-term interest income related to certain restricted long-term deposits, consistent with *Final Results 1999*, 64 FR at 69707.

2. We adjusted Hyundai's reported general and administrative (''G&A'') expense rate by excluding the foreign currency transaction gains and losses that we accounted for in the interest expense calculation, and all unspecified foreign currency transaction gains and losses; and including foreign currency gains and losses related to account payables.

3. We excluded certain non-operating expenses from Hyundai's R&D expenses.

4. In addition to the adjustments for depreciation noted above, we adjusted Hyundai's depreciation expenses to reflect the net effect of increasing depreciation, consistent with *Final Results 1998*, for special depreciation that would have been taken had the respondent continued to take special depreciation on certain equipment for the period of the first half of 1998, and decreasing depreciation expenses to reflect the amount of special depreciation which the Department expensed in *Final Results 1998*, but which Hyundai expensed in its own books and records, and reported in its response, for the current POR.

See Memorandum on Hyundai Electronics Industries Co., Ltd.: Calculations for the Preliminary Results, dated May 30, 2000.

LG

1. We adjusted LG's reported interest expense rate by recalculating the long-term translation gains and losses, as explained above.

2. We adjusted LG's reported G&A expense rate by excluding the foreign currency transaction gains and losses that we accounted for in the interest expense calculation, foreign currency transaction gains and losses related to account receivables, and unspecified foreign currency transaction gains and losses; and including foreign currency gains and losses related to account payables.

See Memorandum on LG Semicon Co., Ltd.: Calculations for the Preliminary Results, dated May 30, 2000.

CV

In accordance with section 773(e) of the Act, we calculated CV based on the respondents' cost of materials and fabrication employed in producing the subject merchandise, SG&A expenses, the profit incurred and realized in connection with the production and sale of the foreign like product, and U.S. packing costs. We used the cost of materials, fabrication, and G&A expenses as reported in the CV portion of the questionnaire response, adjusted as discussed in the COP section above. We used the U.S. packing costs as reported in the U.S. sales portion of the respondents' questionnaire responses. For selling expenses, we used the average of the selling expenses reported for home market sales that survived the cost test, weighted by the total quantity of those sales. For actual profit, we first calculated, based on the home market sales that survived the cost test, the difference between the home market sales value and home market COP, and divided the difference by the home market COP. We then multiplied this percentage by the COP for each U.S. model to derive an actual profit.

Price Comparisons

For price-to-price comparisons, we based NV on the price at which the foreign like product is first sold for consumption in the exporting country, in the usual commercial quantities and in the ordinary course of trade, and to the extent practicable, at the same LOT, in accordance with section 773(a)(1)(B)(i) of the Act. We compared the U.S. prices of individual transactions to the monthly weighted-average price of sales of the foreign like product. In the case of LG, we calculated NV based on delivered prices to unaffiliated customers and, where appropriate, to affiliated customers in the home market.

With respect to LG, we tested those sales that LG made in the home market to affiliated customers to determine whether they were made at arm's length and could be used in our analysis. *See* 19 CFR 351.102(b). To test whether these sales were made at arm's length prices, we compared, on a model-specific basis, prices of sales to affiliated and unaffiliated customers, net of discounts, all movement charges, direct selling expenses, and packing. For tested models of the subject merchandise, prices to an affiliated party were on average 99.5 percent or more of the price to unaffiliated parties and we therefore determined that sales made to the affiliated party were at arm's length. *See* 19 CFR 351.403(c) and Preamble to the Department's regulations, 62 FR at 27355.

With respect to both CV and home market prices, we made adjustments, where appropriate, for inland freight, inland insurance, and discounts. We also reduced CV and home market prices by packing costs incurred in the home market, in accordance with section 773(a)(6)(B)(i) of the Act. In addition, we increased CV and home market prices for U.S. packing costs, in accordance with section 773(a)(6)(A) of the Act. We made further adjustments to home market prices, when applicable, to account for differences in physical characteristics of the merchandise in accordance with section 773(a)(6)(C)(ii) of the Act. Finally, pursuant to section 773(a)(6)(C)(iii) of the Act, we made an adjustment for differences in circumstances of sale by deducting home market direct selling expenses (credit expenses and bank charges) and adding any direct selling expenses associated with U.S. sales not deducted under the provisions of section 772(d)(1) of the Act.

For home market sales by Hyundai and LG that were invoiced in U.S. dollars, and paid for in won, we calculated a won-denominated price, used a won borrowing rate, and based the expenses reported for these sales on the won-denominated price.

Preliminary Results of Review

As a result of this review, we preliminarily determine that the following weighted-average dumping margins exist for May 1, 1998 through April 30, 1999:

Manufacturer/exporter	Percent margin
The G5 Corporation	10.44
Hyundai Electronic Industries Co., Ltd	5.32
Jewon Microelectronics	10.44
Kim's Marketing	10.44
LG Semicon Co., Ltd	3.08
Wooyang Industry Co., Ltd	10.44

Pursuant to 19 CFR 351.224(b), the Department will disclose to parties to the proceeding any calculations performed in connection with these preliminary results within 5 days of the date of publication of this notice. Any interested party may request a hearing within 30 days of the date of publication of this notice. Parties who submit arguments in this proceeding are requested to submit with each argument: (1) a statement of the issue and (2) a brief summary of the argument. All case briefs must be submitted within 30 days of the date of publication of this notice. Rebuttal briefs, which are limited to issues raised in the case briefs, may be filed not later than seven days after the case briefs are filed. A hearing, if requested, will be held two days after the date the rebuttal briefs are filed or the first business day thereafter.

The Department will publish a notice of the final results of this administrative review, which will include the results of its analysis of the issues raised in any written comments or at the hearing, within 120 days from the publication of these preliminary results.

The Department shall determine, and Customs shall assess, antidumping duties on all appropriate entries. The Department will issue appraisement instructions directly to Customs. The final results of this review shall be the basis for the assessment of antidumping duties on entries of merchandise covered by the determination and for future deposits of estimated duties. We have calculated importer-specific ad valorem duty assessment rates based on the ratio of the total amount of dumping margins calculated for the examined sales to the entered value of sales used to calculate those duties. These rates will be assessed uniformly on all entries of each particular importer made during the POR.

Furthermore, the following deposit requirements will be effective upon completion of the final results of these administrative reviews for all shipments of DRAMs from Korea entered, or withdrawn from warehouse, for consumption on or after publication date of the final results of these administrative reviews, as provided by section 751(a)(1) of the Act: (1) the cash deposit rate for the reviewed companies will be the rate established in the final results of this administrative review, except if the rate is less than 0.5 percent *ad valorem* and, therefore, *de minimis,* no cash deposit will be required; (2) for exporters not covered in this review, but covered in the original LTFV investigation or a previous review, the cash deposit rate will continue to be the company-specific rate published in the most recent period; (3) if the exporter is not a firm covered in this review, a previous review, or the original LTFV investigation, but the manufacturer is, the cash deposit rate will be the rate established for the most recent period for the manufacturer of the merchandise; and (4) if neither the exporter nor the manufacturer is a firm covered in this or any previous reviews or the LTFV investigation, the cash deposit rate will be 4.55 percent, the ''all-others'' rate established in the LTFV investigation. These deposit requirements, when imposed, shall remain in effect until publication of the final results of the next administrative review.

This notice serves as a preliminary reminder to importers of their responsibility under 19 CFR 351.402(f) of the Department's regulations to file a certificate regarding the reimbursement of antidumping duties prior to liquidation of the relevant entries during this review period. Failure to comply with this requirement could result in the Secretary's presumption that reimbursement of antidumping duties occurred and the subsequent assessment of double antidumping duties.

This administrative review and this notice are in accordance with sections 751(a)(1) and 777(i)(1) of the Act.

Dated: May 30, 2000.

Troy H. Cribb,

Acting Assistant Secretary for Import Administration.

[FR Doc. 00–14204 Filed 6–5–00; 8:45 am]

BILLING CODE 3510–DS–P

DEPARTMENT OF COMMERCE

International Trade Administration

[A–351–605]

Frozen Concentrated Orange Juice from Brazil; Preliminary Results of Antidumping Duty Administrative Review

AGENCY: Import Administration, International Trade Administration, Department of Commerce.

SUMMARY: In response to a request by the petitioners and one producer/exporter of the subject merchandise, the Department of Commerce is conducting an administrative review of the antidumping duty order on frozen concentrated orange juice from Brazil. This review covers one manufacturer/exporter of the subject merchandise to the United States, Citrovita Agro Industrial Ltda. The period of review is May 1, 1998, through April 30, 1999.

We have preliminarily determined that sales have been made below the normal value by the company subject to this review. If these preliminary results are adopted in the final results of this administrative review, we will instruct the Customs Service to assess antidumping duties on all appropriate entries.

We invite interested parties to comment on these preliminary results. Parties who wish to submit comments in this proceeding are requested to submit with each argument: (1) a statement of the issue; and (2) a brief summary of the argument.

EFFECTIVE DATE: June 6, 2000.

FOR FURTHER INFORMATION CONTACT: Shawn Thompson or Irina Itkin, Import Administration, International Trade Administration, U.S. Department of Commerce, 14th Street and Constitution Avenue, NW, Washington, DC 20230; telephone (202) 482–1776 or (202) 482–0656, respectively.

Applicable Statute and Regulations

Unless otherwise indicated, all citations to the Tariff Act of 1930, as amended (the Act), are references to the provisions effective January 1, 1995, the effective date of the amendments made to the Act by the Uruguay Round Agreements Act (URAA). In addition, unless otherwise indicated, all citations are to the Department's regulations at 19 CFR part 351 (1999).

SUPPLEMENTARY INFORMATION:

Background

On May 19, 1999, the Department of Commerce (the Department) published in the **Federal Register** a notice of ''Opportunity to Request an Administrative Review'' of the antidumping duty order on frozen concentrated orange juice (FCOJ) from Brazil (64 FR 27235).

In accordance with 19 CFR 351.213(b)(1), on May 27, 1999, the petitioners, Florida Citrus Mutual, Caulkins Indiantown Citrus Co., Citrus Belle, Citrus World, Inc., Orange-Co of Florida, Inc., Peace River Citrus Products, Inc., and Southern Gardens Citrus Processors Corp., requested an administrative review of the antidumping order covering the period

May 1, 1998, through April 30, 1999, for two producers and exporters of FCOJ: CTM Citrus S.A. (CTM) and Sucorrico S.A. (Sucorrico). In addition, on May 28, 1999, and June 1, 1999, respectively, two producers and exporters of FCOJ, Branco Peres Citrus S.A. (Branco Peres) and Citrovita Agro Industrial Ltda. (Citrovita), also requested an administrative review. On June 15, 1999, the Department issued questionnaires to Branco Peres, Citrovita, CTM, and Sucorrico.

On June 21, 1999, the Department initiated an administrative review for Citrovita (64 FR 35124 (June 30, 1999)); the initiation notice mistakenly omitted Branco Peres, CTM, and Sucorrico. However, on June 30, 1999, Branco Peres withdrew its request for an administrative review. In addition, in August 1999, CTM and Sucorrico informed the Department that they had no shipments of subject merchandise into the United States during the period of review (POR). We have confirmed CTM's and Sucorrico's assertions using information from the Customs Service. *See* the memorandum to the file from Jerry Surowiec on this topic, dated May 30, 2000.

In September 1999, we received a response to the Department's questionnaire from Citrovita. In October and November 1999, we issued supplemental questionnaires to Citrovita. We received responses to these questionnaires in November and December 1999.

In December 1999, we conducted verification of Citrovita's U.S. sales responses at its offices in Delaware.

In January 2000, we requested additional information related to Citrovita's cost of production (COP), as well as the COP of an affiliated producer of FCOJ. We received a response to this questionnaire in February 2000.

Also in February 2000, we conducted verification of Citrovita's home market sales and cost responses, as well as the sales and cost responses of the affiliated FCOJ producer.

Scope of the Review

The merchandise covered by this review is frozen concentrated orange juice from Brazil. The merchandise is currently classifiable under item 2009.11.00 of the *Harmonized Tariff Schedule* of the United States (HTSUS). The HTSUS item number is provided for convenience and for customs purposes. The Department's written description of the scope of this proceeding remains dispositive.

Period of Review

The POR is May 1, 1998, through April 30, 1999.

Affiliated Producers

During the POR, a sister company to Citrovita's parent company purchased another Brazilian producer of FCOJ and that producer's affiliated trading company (*i.e.*, Cambuhy MC Industrial Ltda. (Cambuhy) and Cambuhy Citrus Comercial e Exportadora S.A. (Cambuhy Exportadora), respectively). Because Citrovita became affiliated with these companies during the POR (i.e., beginning in September 1998), we analyzed whether it would be appropriate to treat Citrovita and these affiliated parties as a single entity using the criteria outlined in 19 CFR 351.401(f). Our analysis showed that the parties have production facilities for similar or identical products which would not require substantial retooling in order to restructure manufacturing priorities. Moreover, the preponderance of evidence on the record indicates a significant potential for the manipulation of prices or production between Citrovita and its affiliates because of the degree of common ownership, the positions held by the owners of the parent company on the affiliates' boards of directors, and the extent to which operations were intertwined during the POR. Accordingly, we have collapsed Citrovita, Cambuhy, and Cambuhy Exportadora for purposes of the preliminary results, in accordance with 19 CFR 351.401(f). However, because there is no evidence that the companies were affiliated prior to September 1998, we have used only the sales and cost data reported for Cambuhy and Cambuhy Exportadora from September 1998 through the end of the POR. For further discussion, see the memorandum to Richard W. Moreland, Deputy Assistant Secretary, AD/CVD Enforcement, Group I, entitled ''Treatment of Data Reported by Affiliated Parties in the Antidumping Duty Administrative Review on Frozen Concentrated Orange Juice from Brazil,'' dated May 30, 2000 (the Affiliated Party issues memo).

Comparison Methodology

To determine whether sales of FCOJ from Brazil to the United States were made at less than normal value (NV), we compared the constructed export price (CEP) to the NV for Citrovita, as specified in the ''Constructed Export Price'' and ''Normal Value'' sections of this notice.

When making comparisons in accordance with section 771(16) of the Act, we considered all products sold in the home market as described in the ''Scope of the Review'' section of this notice that were in the ordinary course of trade. For those U.S. sales of FCOJ for which there were no comparable foreign market sales in the ordinary course of trade, we compared CEP to constructed value (CV), in accordance with section 773(a)(4) of the Act.

Level of Trade and CEP Offset

In accordance with section 773(a)(1)(B) of the Act, to the extent practicable, we determine NV based on sales in the comparison market at the same level of trade as CEP. The NV level of trade is that of the starting-price sales in the comparison market or, when NV is based on CV, that of the sales from which we derive selling, general and administrative expenses (SG&A) and profit. For CEP, it is the level of the constructed sale from the exporter to the importer.

To determine whether NV sales are at a different level of trade than CEP sales, we examine stages in the marketing process and selling functions along the chain of distribution between the producer and the unaffiliated customer. If the comparison-market sales are at a different level of trade and the difference affects price comparability, as manifested in a pattern of consistent price differences between the sales on which NV is based and comparison-market sales at the level of trade of the export transaction, we make a level-of-trade adjustment under section 773(a)(7)(A) of the Act. Finally, for CEP sales, if the NV level is more remote from the factory than the CEP level and there is no basis for determining whether any difference in the levels between NV and CEP affects price comparability, we adjust NV under section 773(a)(7)(B) of the Act (the CEP offset provision). *See Notice of Final Determination of Sales at Less Than Fair Value: Certain Cut-to-Length Carbon Steel Plate from South Africa,* 62 FR 61731 (Nov. 19, 1997).

We note that the U.S. Court of International Trade (CIT) has held that the Department's practice of determining levels of trade for CEP transactions after CEP deductions is an impermissible interpretation of section 772(d) of the Act. *See Borden, Inc.* v. *United States*, 4 F. Supp. 2d 1221, 1241–42 (CIT 1998) (*Borden*). The Department believes, however, that its practice is in full compliance with the statute. On June 4, 1999, the CIT entered final judgement in *Borden* on the level of trade issue. *See Borden Inc.* v. *United*

States, Court No. 96–08–01970, Slip Op. 99–50 (CIT June 4, 1999). The government has filed an appeal of *Borden* which is pending before the U.S. Court of Appeals for the Federal Circuit. Consequently, the Department has continued to follow its normal practice of adjusting CEP under section 772(d) prior to starting a level of trade analysis, as articulated by the Department's regulations at section 351.412.

Citrovita claimed that it made home market sales at only one level of trade (*i.e.*, sales to end users). Because Citrovita performed the same selling activities for sales to all customers in the home market, we determined that no level of trade adjustment is possible for Citrovita.

In order to determine whether NV was established at a level of trade which constituted a more advanced stage of distribution than the level of trade of the CEP, we compared the selling functions performed for home market sales with those performed with respect to the CEP transaction, which excludes economic activities occurring in the United States. We found that Citrovita performed most of the selling functions and services related to U.S. sales at its sales office in the United States. These selling functions are associated with those expenses which we deduct from the CEP starting price, as specified in section 772(d) of the Act. We found that Citrovita performed the same selling functions for home market sales in Brazil. Therefore, we find that Citrovita's sales in the home market were at a more advanced stage of marketing and distribution (*i.e.*, more remote from the factory) than the constructed U.S. level of trade, which represents an F.O.B. foreign port price after the deduction of expenses associated with U.S. selling activities. However, because we find that Citrovita sells at only one level of trade in the foreign market, the difference in the level of trade cannot be quantified. Further, we do not have information which would allow us to examine pricing patterns based on the respondent's sales of other products, and there are no other respondents or other record information on which such an analysis could be based. Accordingly, because the data available do not form an appropriate basis for making a level of trade adjustment, but the level of trade in the home market is at a more advanced stage of distribution than the level of trade of the CEP, we have granted a CEP offset to Citrovita. For further discussion, see the concurrence memorandum issued for the preliminary results of this review, dated May 30, 2000 (the concurrence memo).

Constructed Export Price

We based the U.S. price on CEP because sales to the unaffiliated purchaser took place after importation into the United States, in accordance with section 772(b) of the Act. We calculated CEP based on the starting price to the first unaffiliated purchaser in the United States. We made deductions from the starting price, where appropriate, for foreign inland freight, foreign brokerage and handling expenses, ocean freight, marine insurance, U.S. customs duty, U.S. port fees, U.S. brokerage and handling expenses, U.S. inland freight, and U.S. warehousing expenses, in accordance with section 772(c)(2)(A) of the Act.

We made additional deductions from CEP, where appropriate, for commissions, credit expenses, and U.S. indirect selling expenses, including U.S. inventory carrying costs, in accordance with section 772(d)(1) of the Act.

Pursuant to section 772(d)(3) of the Act, we further reduced the starting price by an amount for profit, to arrive at CEP. In accordance with section 772(f) of the Act, we calculated the CEP profit rate using the expenses incurred by Citrovita and its affiliate on their sales of the subject merchandise in the United States and of the foreign like product in the home market and the profit associated with those sales.

Normal Value

In order to determine whether there is a sufficient volume of sales in the home market to serve as a viable basis for calculating NV (*i.e.,* the aggregate volume of home market sales of the foreign like product is greater than five percent of the aggregate volume of U.S. sales), we compared the volume of Citrovita's home market sales of the foreign like product to the volume of U.S. sales of subject merchandise, in accordance with 19 CFR 351.404(b). Based on this comparison, we determined that Citrovita had a viable home market during the POR. Consequently, we based NV on home market sales.

Pursuant to section 773(b)(2)(A)(ii) of the Act, there were reasonable grounds to believe or suspect that Citrovita had made home market sales at prices below their COPs in this review because the Department disregarded sales that failed the cost test for Citrovita in the most recently completed administrative review. *See Frozen Concentrated Orange Juice From Brazil; Final Results and Partial Rescission of Antidumping Duty Administrative Review,* 64 FR 43650, 43652 (Aug. 11, 1999) (*FCOJ from Brazil*). As a result, the Department initiated an investigation to determine whether Citrovita made home market sales during the POR at prices below their COP.

We calculated the COP based on the sum of Citrovita's and the affiliated producers' costs of materials and fabrication for the foreign like product, plus amounts for general and administrative (G&A) expenses and financing expenses, in accordance with section 773(b)(3) of the Act.

We used the reported COP amounts to compute a weighted-average COP during the POR, except in the following instances in which the costs were not appropriately quantified or valued:

1. We treated fresh orange juice as a co-product, rather than a by-product as reported, because this product was not an unintentional consequence of production. For further discussion, see the concurrence memo;
2. We recalculated the claimed by-product credit to (1) correct certain errors discovered during verification; and (2) state all sales of by-products to affiliated parties on an arm's-length basis. For further discussion, see the concurrence memo;
3. We valued the cost of fruit provided by an affiliated party using the affiliate's cost of production, in accordance with sections 773(f)(2) and (3) of the Act. For further discussion, see the concurrence memo and the Affiliated Party issues memo;
4. We treated Cambuhy Exportadora as the producer of certain FCOJ manufactured during the POR. We based the value of the fruit used in the production of this FCOJ on facts available, because Citrovita did not report this information. As facts available, we used the cost of production noted in item 3, above. For further discussion, see the Affiliated Party issues memo;
5. We made no addition to the COP for ICMS and IPI taxes because we found at verification that the respondent completely recovered these taxes during the POR;
6. We included the freight costs on certain shipments of oranges which had been excluded from the reported costs;
7. We revised the calculation of G&A expenses to include certain of Citrovita's non-operating expenses; and
8. We amortized certain foreign exchange losses incurred by Cambuhy on long-term U.S. dollar-denominated debt over the remaining life of the loans. For further discussion, see the Affiliated Party issues memo.

We compared the COP to home market prices of the foreign like

product, as required under section 773(b) of the Act, in order to determine whether these sales had been made at prices below the COP. On a product-specific basis, we compared the COP to home market prices, less any applicable movement charges, selling expenses, and packing costs.

In determining whether to disregard home market sales made at prices below the COP, we examined whether such sales were made: (1) In substantial quantities within an extended period of time; and (2) at prices which permitted the recovery of all costs within a reasonable period of time in the normal course of trade. *See* section 773(b)(1) of the Act.

Pursuant to section 773(b)(2)(C)(i) of the Act, where less than 20 percent of Citrovita's sales of a given product were made at prices less than the COP, we did not disregard any below-cost sales of that product because we determined that the below-cost sales were not made in ''substantial quantities.''

Where 20 percent or more of Citrovita's sales of a given product were at prices below the COP, we found that sales of that model were made in ''substantial quantities'' within an extended period of time, as defined in section 773(b)(2)(B) and (C) of the Act. In such cases, we also determined that such sales were not made at prices which would permit recovery of all costs within a reasonable period of time, in accordance with section 773(b)(2)(D) of the Act. Therefore, we disregarded the below-cost sales in determining NV.

We found that more than 20 percent of Citrovita's home market sales within an extended period of time were made at prices less than the COP. Further, the prices did not provide for the recovery of costs within a reasonable period of time. We, therefore, disregarded the below-cost sales and, where available, used the remaining above-cost sales as the basis for determining NV, in accordance with section 773(b)(1) of the Act. For those U.S. sales of FCOJ for which there were no comparable home market sales in the ordinary course of trade (i.e., sales within the contemporaneous window which were made at prices above the COP), we compared CEP to CV, in accordance with section 773(a)(4) of the Act.

In accordance with section 773(e) of the Act, we calculated CV based on the sum of the respondent's cost of materials, fabrication, SG&A (including financing expenses), profit, and U.S. packing costs, adjusted as noted above. In accordance with section 773(e)(2)(A) of the Act, we based SG&A (including financing expenses), and profit on the amounts incurred and realized by Citrovita in connection with the production and sale of the foreign like product in the ordinary course of trade, for consumption in the foreign country.

Where NV was based on home market sales, we based NV on the starting price to unaffiliated customers. We made deductions from the starting price for foreign inland freight, pursuant to section 773(a)(6)(B) of the Act. Pursuant to section 773(a)(6)(C)(iii) of the Act, we also made deductions for home market credit expenses (offset by interest revenue). We recalculated home market credit expenses on the basis of home market price net of Brazilian taxes, in accordance with our practice. *See, e.g., Ferrosilicon from Brazil; Final Results of Antidumping Duty Administrative Review,* 61 FR 59407, 59410 (Nov. 22, 1996); and FCOJ from Brazil, 64 FR at 43653.

We disallowed a claim made for foreign exchange losses on one home market sale because this sale was denominated in, and paid for, in Brazilian reais. Consequently, because this transaction did not involve the conversion of currency, there was no foreign exchange loss associated with the sale. For further discussion, see the concurrence memo.

We deducted home market indirect selling expenses, including inventory carrying costs and other indirect selling expenses, up to the amount of indirect selling expenses incurred on U.S. sales, in accordance with section 773(a)(7)(B) of the Act. Where applicable, in accordance with 19 CFR 351.410(e), we offset any commission paid on a U.S. sale by reducing the NV by home market indirect selling expenses remaining after the deduction for the CEP offset, up to the amount of the U.S. commission.

In addition, we deducted home market packing costs and added U.S. packing costs, in accordance with section 773(a)(6) of the Act.

Currency Conversion

We made currency conversions in accordance with section 773A of the Act. Section 773A(a) of the Act directs the Department to use a daily exchange rate to convert foreign currencies into U.S. dollars unless the daily rate involves a fluctuation. The Department considers a ''fluctuation'' to exist when the daily exchange rate differs from the benchmark rate by 2.25 percent or more. The benchmark is defined as the moving average of rates for the past 40 business days. When we determine a fluctuation to have existed, we generally substitute the benchmark rate for the daily rate, in accordance with established practice. (For an explanation of this method, *see Policy Bulletin 96–1: Currency Conversions,* 61 FR 9434 (Mar. 8, 1996).)

Our preliminary analysis of dollar-real exchange rates shows that the real declined rapidly in early 1999, losing over 40 percent of its value in January 1999, when the Brazilian government ended its exchange rate restrictions. The decline was, in both speed and magnitude, many times more severe than any change in the dollar-real exchange rate during recent years, and it did not rebound significantly in a short time. As such, we preliminarily determine that the decline in the real during January 1999 was of such magnitude that the dollar-real exchange rate cannot reasonably be viewed as having simply fluctuated at that time, *i.e.,* as having experienced only a momentary drop in value relative to the normal benchmark. We preliminarily find that there was a large, precipitous drop in the value of the real in relation to the U.S. dollar in January 1999.

We recognize that, following a large and precipitous decline in the value of a currency, a period may exist wherein it is unclear whether further declines are a continuation of the large and precipitous decline or merely fluctuations. Under the circumstances of this case, such uncertainty may have existed following the large, precipitous drop in January 1999. Thus, we devised a methodology for identifying the point following a precipitous drop at which it is reasonable to presume that rates were merely fluctuating. Beginning on January 13, 1999, we used only daily rates until the daily rates were not more than 2.25 percent below the average of the 20 previous daily rates for five consecutive days. At that point, we determined that the pattern of daily rates no longer reasonably precluded the possibility that they were merely ''fluctuating.'' (Using a 20-day average for this purpose provides a reasonable indication that it is no longer necessary to refrain from using the normal methodology, while avoiding the use of daily rates exclusively for an excessive period of time.) Accordingly, from the first of these five days, we resumed classifying daily rates as ''fluctuating'' or ''normal'' in accordance with our standard practice, except that we began with a 20-day benchmark and on each succeeding day added a daily rate to the average until the normal 40-day average was restored as the benchmark. *See Notice of Final Determination of Sales at Less Than Fair Value: Certain Cold-Rolled Flat-Rolled Carbon-Quality Steel Products from Brazil, 65 FR 5554, 5563–64 (Feb. 4, 2000); and Notice of Final Results of Antidumping Duty Administrative Review: Certain Welded*

Carbon Steel Pipes and Tubes from Thailand, 64 FR 56759, 56763 (Oct. 21, 1999).

Applying this methodology in the instant case, we used daily rates from January 13, 1999, through March 4, 1999. We then resumed the use of a benchmark, starting with a benchmark based on the average of the 20 reported daily rates on March 5, 1999. We resumed the use of the normal 40-day benchmark starting on April 3, 1999, through the close of the review period.

Preliminary Results of Review

As a result of our review, we preliminarily determine that the following margin exists for the period May 1, 1998, through April 30, 1999:

Manufacturer/Exporter	Percent margin
Citrovita Agro Industrial Ltda/Cambuhy MC Industrial Ltda/Cambuhy Citrus Comercial e Exportadora	26.27

The Department will disclose to parties the calculations performed in connection with these preliminary results within five days of the date of publication of this notice. Interested parties may request a hearing within 30 days of the publication. Any hearing, if requested, will be held seven days after the date rebuttal briefs are filed. Interested parties may submit case briefs not later than 30 days after the date of publication of this notice. Rebuttal briefs, limited to issues raised in the case briefs, may be filed not later than 37 days after the date of publication of this notice. The Department will publish a notice of the final results of this administrative review, which will include the results of its analysis of issues raised in any such case briefs, within 120 days of the publication of these preliminary results.

Upon completion of this administrative review, the Department shall determine, and the Customs Service shall assess, antidumping duties on all appropriate entries. We have calculated importer-specific assessment rates based on the ratio of the total amount of antidumping duties calculated for the examined sales to the total entered value of those sales, as appropriate. These rates will be assessed uniformly on all entries of particular importers made during the POR. Pursuant to 19 CFR 351.106(c)(2), we will instruct the Customs Service to liquidate without regard to antidumping duties all entries for any importer for whom the assessment rate is *de minimis* (*i.e.,* less than 0.50 percent). The Department will issue appraisement instructions directly to the Customs Service.

Further, the following deposit requirements will be effective for all shipments of FCOJ from Brazil entered, or withdrawn from warehouse, for consumption on or after the publication date of the final results of this administrative review, as provided for by section 751(a)(1) of the Act: 1) the cash deposit rates for Citrovita, Cambuhy, and Cambuhy Exportadora will be the rate established in the final results of this review; except if the rate is less than 0.50 percent and, therefore, *de minimis* within the meaning of 19 CFR 351.106, the cash deposit will be zero; 2) for previously reviewed or investigated companies not listed above, the cash deposit rate will continue to be the company-specific rate published for the most recent period; 3) if the exporter is not a firm covered in this review, a prior review, or the less-than-fair-value (LTFV) investigation, but the manufacturer is, the cash deposit rate will be the rate established for the most recent period for the manufacturer of the merchandise; and 4) the cash deposit rate for all other manufacturers or exporters will continue to be 1.96 percent, the all others rate established in the LTFV investigation.

These deposit requirements, when imposed, shall remain in effect until publication of the final results of the next administrative review.

This notice serves as a preliminary reminder to importers of their responsibility under 19 CFR 351.402(f) to file a certificate regarding the reimbursement of antidumping duties prior to liquidation of the relevant entries during this review period. Failure to comply with this requirement could result in the Secretary's presumption that reimbursement of antidumping duties occurred and the subsequent assessment of double antidumping duties.

This administrative review and notice are in accordance with sections 751(i)(1) and 777(i)(1) of the Act.

Dated: May 30, 2000.

Troy H. Cribb,

Acting Assistant Secretary for Import Administration.

[FR Doc. 00–14205 Filed 6–5–00; 8:45 am]

BILLING CODE 3510–DS–P

DEPARTMENT OF COMMERCE

International Trade Administration

[A–583–824]

Polyvinyl Alcohol From Taiwan: Preliminary Results of Third Antidumping Duty Administrative Review and Intent Not To Revoke Order in Part

AGENCY: Import Administration, International Trade Administration, Department of Commerce.

ACTION: Notice of preliminary results of third antidumping duty administrative review and intent not to revoke order in part.

SUMMARY: In response to a request by Chang Chun Petrochemical Co., Ltd., a producer and exporter of polyvinyl alcohol from Taiwan, the Department of Commerce is conducting an administrative review of the antidumping duty order on polyvinyl alcohol from Taiwan. The period of review is May 1, 1998, through April 30, 1999.

We preliminarily find that sales of subject merchandise have not been made below normal value. If these preliminary results are adopted in our final results of administrative review, we will instruct the Customs Service not to assess antidumping duties on entries for which the importer-specific rate is less than *de minimis* (*i.e.*, less than 0.50 percent). Furthermore, we preliminarily intend not to revoke the antidumping duty order with respect to subject merchandise produced and also exported by Chang Chun Petrochemical Co., Ltd. because its sales were not made in commercial quantities (*see* 19 CFR 351.222(e)); *see Intent Not to Revoke* section of this notice. Interested parties are invited to comment on these preliminary results.

EFFECTIVE DATE: June 6, 2000.

FOR FURTHER INFORMATION CONTACT: Brian Ledgerwood, at (202) 482–3836, or Brian Smith, at (202) 482–1766, Import Administration, International Trade Administration, U.S. Department of

Commerce, 14th Street and Constitution Avenue, Washington, DC 20230.

SUPPLEMENTARY INFORMATION:

The Applicable Statute and Regulations

Unless otherwise indicated, all citations to the statute are references to the provisions effective January 1, 1995, the effective date of the amendments made to the Tariff Act of 1930 (''the Act''), as amended, by the Uruguay Round Agreements Act (''URAA''). In addition, unless otherwise indicated, all references are made to the Department of Commerce's (''the Department's'') final regulations at 19 CFR part 351 (1999).

Case History

On May 14, 1996, the Department published in the **Federal Register** an antidumping duty order on polyvinyl alcohol (''PVA'') from Taiwan. *See* 61 FR 24286. On May 19, 1999, the Department published a notice providing an opportunity to request an administrative review of this order for the period May 1, 1997, through April 30, 1998 (64 FR 27235). On May 27, 1999, we received a timely request for an administrative review from Chang Chun Petrochemical Co. (''Chang Chun''). In addition, Chang Chun requested that the Department revoke the antidumping duty order with respect to it. On June 30, 1999, we published a notice of initiation of this review for Chang Chun (64 FR 35124).

On July 8, 1999, we issued an antidumping questionnaire to Chang Chun. Because, the Department disregarded sales that failed the cost test in the last completed review for Chang Chun (*see Notice of Final Results of Second Antidumping Duty Administrative Review: Polyvinyl Alcohol from Taiwan,* 64 FR 32024 (June 15, 1999)), the Department had reasonable grounds to believe or suspect that Chang Chun's sales of the foreign like product may have been made at prices below the cost of production (''COP'') as provided by section 773(b)(2)(A)(ii) of the Act. Therefore, pursuant to section 773(b)(1) of the Act, we initiated an investigation to determine whether Chang Chun made home market sales during the period of review (''POR'') at prices below its COP, and required Chang Chun to respond to the COP section of the questionnaire issued in July 1999.

The Department received Chang Chun's response in August 1999. We issued supplemental questionnaires to Chang Chun in September and November 1999. Responses to these questionnaires were received in October and November 1999, respectively.

On November 15, 1999, the Department requested submissions of factual information regarding revocation of the antidumping order in part. Such submissions and rebuttal comments were received from the petitioner, Air Products and Chemicals, Inc., and Chang Chun in December 1999. On January 14, 2000, the Department issued to Chang Chun a supplemental questionnaire on the information it submitted pertaining to revocation. Chang Chun submitted its supplemental revocation response on February 4, 2000.

On January 21, 2000, the Department published a notice postponing the preliminary results of this review until May 30, 2000 (65 FR 3418). On February 9, 2000, the Department requested confirmation from the Customs Service that it had not made any adverse findings with respect to the classification of PVA exported to the United States from Taiwan by Chang Chun. On February 16, 2000, the U.S. Customs Service confirmed that although it had conducted an investigation on Chang Chun's shipments, it found no violations (*see* memorandum to the file, dated March 14, 2000). Pursuant to section 782(i)(2) of the Act, the Department verified Chang Chun's response from February 21 through March 3, 2000. On April 27, 2000, the Department issued its verification report.

Scope of Review

The product covered by this review is PVA. PVA is a dry, white to cream-colored, water-soluble synthetic polymer. This product consists of polyvinyl alcohols hydrolyzed in excess of 85 percent, whether or not mixed or diluted with defoamer or boric acid. Excluded from this review are PVAs covalently bonded with acetoacetylate, carboxylic acid, or sulfonic acid uniformly present on all polymer chains in a concentration equal to or greater than two mole percent, and PVAs covalently bonded with silane uniformly present on all polymer chains in a concentration equal to or greater than one-tenth of one mole percent. PVA in fiber form is not included in the scope of this review.

The merchandise under review is currently classifiable under subheading 3905.30.00 of the *Harmonized Tariff Schedule of the United States* (''HTSUS''). Although the HTSUS subheading is provided for convenience and customs purposes, our written description of the scope is dispositive.

Period of Review

The POR is May 1, 1998, through April 30, 1999.

Verification

As provided in section 782(i)(2) of the Act, we verified information provided by Chang Chun. We used standard verification procedures, including on-site inspection of the manufacturer's facilities and examination of relevant sales and financial records. Our verification results are outlined in the verification reports placed in the case file (*see* the Department's April 27, 2000, verification report (hereafter ''verification report'') for further discussion).

Fair Value Comparisons

To determine whether sales of the subject merchandise to the United States were made at prices below normal value, we compared the export price to normal value as described below. In accordance with section 777A(d)(2) of the Act, we compared the export price of individual transactions to the monthly weighted-average price of sales of the foreign like product made in the ordinary course of trade (*see* section 773(a)(1)(B)(i) of the Act). Where there were no sales of the foreign like product made in the ordinary course of trade, we compared the export price of those transactions to the constructed value of that merchandise (*see* section 773(a)(4) of the Act).

Product Comparisons

In accordance with section 771(16) of the Act, we considered all products produced by Chang Chun covered by the description in the ''Scope of the Review'' section, above, to be foreign like products for purposes of determining appropriate product comparisons to U.S. sales. We compared U.S. sales to sales made in the home market within the contemporaneous window period, which extends from three months prior to the U.S. sale until two months after the sale. Where there were no sales of identical merchandise made in the home market in the ordinary course of trade, we compared U.S. sales to sales of the most similar foreign like product made in the ordinary course of trade. In making the product comparisons, we matched foreign like products based on the physical characteristics reported by Chang Chun in the following order: viscosity, hydrolysis, particle size, tackifier, defoamer, ash, color, volatiles, and visual impurities. For those U.S. sales of PVA for which there were no comparable foreign market sales in the ordinary course of trade (*i.e.,* sales

within the contemporaneous window which were made at prices above the COP), we compared U.S. sales to the constructed value, in accordance with section 773(a)(4) of the Act.

Export Price

In accordance with sections 772(a) and (c) of the Act, we calculated an export price for all of Chang Chun's sales since the merchandise was sold directly to the first unaffiliated purchaser in the United States prior to importation, and because constructed export price (''CEP'') methodology was not otherwise warranted based on the facts of record. We calculated export price based on the packed, CIF price to unaffiliated purchasers in, or for exportation to, the United States. We made deductions from the starting price for domestic inland freight, foreign brokerage and handling, international freight, and marine insurance in accordance with section 772(c)(2)(A) of the Act. We made the following adjustments to Chang Chun's U.S. expense data based on our verification findings: (1) we corrected the reported amounts for packing expenses; and (2) we corrected invoice-specific information with respect to marine insurance and bank charges (*see* pages 16–21 and 29 of the verification report for further discussion).

Normal Value

In order to determine whether there was a sufficient volume of sales in the home market to serve as a viable basis for calculating normal value (*i.e.,* the aggregate volume of home market sales of the foreign like product is five percent or more of the aggregate volume of U.S. sales), we compared Chang Chun's volume of home market sales of the foreign like product to its volume of U.S. sales of the subject merchandise, in accordance with 19 CFR 351.404(b). For Chang Chun, we determined that the quantity of foreign like product sold in the exporting country was sufficient to permit a proper comparison with the sales of the subject merchandise to the United States because Chang Chun had sales in its home market which were greater than five percent of its sales in the U.S. market. Therefore, in accordance with section 773(a)(1)(B)(i) of the Act, we based normal value on sales in Taiwan.

Based on our verification findings, we made the following adjustments to Chang Chun's reported home market expense data: (1) we corrected the reported amounts for credit expenses and packing expenses; and (2) we corrected invoice-specific information with respect to the quantity for one sales transaction (*see* pages 4, 15–16 and 30 of the verification report and May 30, 2000, preliminary results calculation memorandum for further discussion).

Level of Trade

In accordance with section 773(a)(1)(B)(i) of the Act, to the extent practicable, we determined normal value based on sales in the comparison market at the same level of trade (''LOT'') as the export price transaction. The normal value LOT is that of the starting-price sales in the comparison market or, when normal value is based on constructed value, that of the sales from which we derive selling, general and administrative (''SG&A'') expenses and profit. For export price, the LOT is also the level of the starting-price sale, which is usually from the exporter to the importer.

To determine whether normal value sales are at a different LOT than export price, we examine stages in the marketing process and selling functions along the chain of distribution between the producer and the customer. If the comparison-market sales are at a different LOT, and the difference affects price comparability, as manifested in a pattern of consistent price differences between the sales on which normal value is based and comparison-market sales at the LOT of the export transaction, we make an LOT adjustment under section 773(a)(7)(A) of the Act. *See Final Determination of Sales at Less Than Fair Value: Certain Cut-to-Length Carbon Steel Plate from South Africa,* 62 FR 61731, 61732–33 (November 19, 1997).

As in previous reviews, Chang Chun reported one channel of distribution for its U.S. and home market sales. Based on our analysis of the selling functions, we found that the selling activities performed in both the home market and the United States (*e.g.,* freight and delivery arrangements) were similar. Therefore, we determined that sales in both markets are at the same LOT and consequently no LOT adjustment is warranted. (*See Final Results of Antidumping Duty Administrative Review: PVA From Taiwan,* 63 FR 32810, 32812 (June 16, 1998)).

Cost of Production (''COP'')

As we stated in the *Case History* section, because we disregarded sales below the COP for Chang Chun in the last completed segment of the proceeding (*i.e.,* the second administrative review), we had reasonable grounds to believe or suspect that Chang Chun's sales of the foreign product under consideration for the determination of normal value in this review may have been made at prices below the COP, as provided by section 773(b)(2)(A)(ii) of the Act. Therefore, pursuant to section 773(b)(1) of the Act, we initiated a COP investigation of sales by Chang Chun in the home market.

A. Calculation of COP

In accordance with section 773(b)(3) of the Act, we calculated the weighted-average COP, by grade, based on the sum of the cost of materials and fabrication, SG&A expenses, and packing costs. We relied on the submitted COPs, correcting the reported amounts for general and administrative expenses and factory overhead based on our verification findings (*see* pages 29–30 of the verification report for further discussion). In addition, we adjusted the joint production costs between PVA and acetic acid using the relative sales value of each product calculated on the basis of a two-year period prior to the period of the less-than-fair-value (''LTFV'') investigation (*see* May 30, 2000, preliminary results calculation memorandum and *Final Results of Second Antidumping Duty Administrative Review: PVA From Taiwan;* 64 FR 32024, 32025 (June 15, 1999)).

Chang Chun purchased a major input (*i.e.,* vinyl acetate monomer (''VAM'')) used in the production of PVA from an affiliated party. Pursuant to 19 CFR 351.407(b), we applied the major input rule to determine the value of the VAM. Under the major input rule, we normally will determine the value of a major input purchased from an affiliated person based on the higher of: (1) the price paid by the exporter or producer to the affiliated person for the major input; (2) the amount usually reflected in sales of the major input in the market under consideration; or (3) the cost to the affiliated person of producing the major input. In this case, we used the transfer price of VAM from Chang Chun's affiliate, which was higher than the market price or the affiliate's COP.

B. Test of Home Market Prices

We compared the weighted-average COP, adjusted where appropriate, to the comparison market sales of the foreign like product, as required under section 773(b) of the Act, in order to determine whether these sales had been made at prices below the COP within an extended period of time in substantial quantities, and whether such prices were sufficient to permit the recovery of all costs within a reasonable period of time. On a grade-specific basis, we compared the revised COP to the comparison market prices, less any applicable movement charges,

discounts, and direct and indirect selling expenses.

C. Results of the COP Test

Pursuant to section 773(b)(2)(C), where less than 20 percent of the respondent's sales of a given product were made at prices below the COP, we did not disregard any below-cost sales of that product because we determined that the below-cost sales were not made in ''substantial quantities.'' Where 20 percent or more of the respondent's sales of a given product were made at prices below the COP, we disregarded the below-cost sales because such sales were found to be made within an extended period of time in ''substantial quantities,'' in accordance with sections 773(b)(2)(B) and (C) of the Act, and because the below-cost sales of the product were at prices which would not permit recovery of all costs within a reasonable period of time, in accordance with section 773(b)(2)(D) of the Act.

Based on this test, we excluded from our analysis certain comparison-market sales of PVA products that were made at below-COP prices within the POR. For those U.S. sales of PVA for which there were no comparable home market sales in the ordinary course of trade, we compared export price to constructed value in accordance with section 773(a)(4) of the Act.

D. Calculation of Constructed Value

In accordance with section 773(e) of the Act, we calculated constructed value based on the sum of Chang Chun's cost of materials, fabrication, SG&A (including interest expenses), U.S. packing costs, and profit.

In accordance with section 773(e)(2)(A) of the Act, we based SG&A and profit on the amounts incurred and realized by Chang Chun in connection with the production and sale of the foreign like product in the ordinary course of trade for consumption in Taiwan. We used the weighted-average home market selling expenses for this purpose.

Price-to-Price Comparisons

We calculated normal value based on packed, FOB or delivered prices to unaffiliated purchasers in Taiwan. We made adjustments to the starting price for returns, where appropriate. We also made deductions, where appropriate, for inland freight—which included inland insurance—pursuant to section 773(a)(6)(B) of the Act. In addition, we made adjustments for differences in costs attributable to differences in the physical characteristics of the merchandise in accordance with section 773(a)(6)(C)(ii) of the Act and 19 CFR 351.411, as well as for differences in circumstances-of-sale (''COS'') in accordance with section 773(a)(6)(C)(iii) of the Act and 19 CFR 351.410. We made COS adjustments by deducting home market direct selling expenses (*i.e.,* credit expenses) and adding U.S. direct selling expenses (*i.e.,* credit expenses and bank charges). Finally, we deducted home market packing costs and added U.S. packing costs in accordance with section 773(a)(6) of the Act.

Price to Constructed Value Comparisons

Where we compared export price to constructed value, we made COS adjustments by deducting from constructed value the weighted-average home market direct selling expenses and adding the U.S. direct selling expenses, in accordance with section 773(a)(8) of the Act and section 19 CFR 351.401(c).

Intent Not To Revoke

On May 27, 1999, Chang Chun requested that, pursuant to 19 CFR 351.222(b), the Department revoke the antidumping duty order on PVA from Taiwan, with respect to merchandise that it produces and exports, at the conclusion of this administrative review. Chang Chun submitted along with its revocation request a certification stating that: (1) the company sold subject merchandise at not less than normal value during the POR, and that in the future it would not sell such merchandise at less than normal value (*see* 19 CFR 351.222(e)(1)(i)); (2) the company has sold the subject merchandise to the United States in commercial quantities during each of the past three years (*see* 19 CFR 351.222(e)(1)(ii)); and (3) the company agrees to immediate reinstatement of the order, if the Department concludes that the company, subsequent to revocation, has sold the subject merchandise at less than normal value (*see* 19 CFR 351.222(b)(1)(iii)).

On November 9, 1999, the petitioner opposed the request for revocation, arguing that the antidumping order is necessary to offset dumping and that Chang Chun will sell subject merchandise at less than normal value if the order is revoked. At the request of the Department, both the petitioner and Chang Chun submitted comments on Chang Chun's request for revocation (*see* December 7, and December 14, 1999, revocation submissions submitted by the parties).

The Department ''may revoke, in whole or in part'' an antidumping duty order upon completion of a review under section 751 of the Act. While Congress has not specified the procedures that the Department must follow in revoking an order, the Department has developed a procedure for revocation that is described in 19 CFR 351.222. This regulation requires, *inter alia,* that a company requesting revocation in part must submit the following: (1) a certification that the company has sold the subject merchandise at not less than normal value in the current review period and that the company will not sell at less than normal value in the future; (2) a certification that the company sold the subject merchandise in each of the three years forming the basis of the request in commercial quantities; and (3) an agreement to immediate reinstatement of the order if the Department concludes that the company, subsequent to the revocation, has sold subject merchandise at less than normal value. (*See* 19 CFR 351.222(e)(1)). Upon receipt of such a request, the Department may revoke an order, in whole or in part, if it concludes that all three criteria mentioned above have been met. *See* 19 CFR 351.222(b)(2). *See Final Results of the Antidumping Duty Administrative Review: Silicon Metal From Brazil,* 65 FR 7497, 7498, (February 15, 2000) (hereafter ''*Silicon Metal From Brazil*'').

Chang Chun submitted the required certifications and agreement. However, after applying the three criteria outlined in section 351.222(b) of the Department's regulations, and after considering the comments of the parties and all of the evidence in the record, we have preliminarily determined that one of the Department's requirements for revocation has not been met. Specifically, although we preliminarily find that Chang Chun has demonstrated three consecutive years of sales at not less than normal value, we also preliminarily find that, based on Chang Chun's U.S. shipment data, its sales to the United States have not been made in commercial quantities during each of the three review periods at issue, in accordance with 19 CFR 351.222(d) and 351.222(e)(1)(ii).

In particular, data on the record indicate that Chang Chun's sales of PVA to the U.S. market during the second POR (*i.e.,* U.S. sales examined during the second administrative review of this proceeding) do not serve as an adequate basis for finding commercial quantities when compared to the total U.S. sales

volume during the POI.[1] (*See* May 22, 2000, memorandum to the file regarding corrections to the verification report, including commercial quantities data noted therein.)

Therefore, we have determined that the requirements for revocation have not been met because Chang Chun has not made sales to the United States in commercial quantities during the second segment of this proceeding.[2] Based on our examination of these facts at verification and our review of Chang Chun's sales practices, we find that, consistent with Department practice, we do not have a sufficient basis to conclude that the *de minimis* dumping margin calculated for Chang Chun for the second administrative review is reflective of the company's normal commercial experience. *See, e.g., Silicon Metal from Brazil,* 65 FR at 7498 (finding that because sales and volume figures were so small the Department could not conclude that the reviews reflected what the company's normal commercial experience would be absent the discipline of an antidumping duty order). Because Chang Chun has not met the commercial quantities requirement, we have not examined the issue of the likelihood of future dumping (*see Silicon Metal from Brazil,* 65 FR at 7505).

Chang Chun attempts to explain that the significant decrease in its sales volume during the second administrative review period was due to the alleged effect of the antidumping duty cash deposit rate required on its U.S. shipments of PVA as a result of the LTFV investigation prior to the publication of the final results of the first administrative review of the order on PVA from Taiwan (63 FR 32810, June 16, 1998). Chang Chun states that the LTFV cash deposit rate was the major factor affecting its substantial reduction in U.S. sales during the second POR (*i.e.,* 5/1/97—4/30/98). (*See* verification report at page 29 and 30.) Whether this is the case or not does not detract from the record evidence which unequivocally demonstrates that the volume of such sales was far below the volume of Chang Chun's sales prior to the imposition of the discipline of the antidumping duty order. Moreover, it is the volume of these sales (not Chang Chun's alleged reasons for their size in this case) that is the focus of the Department's analysis with respect to whether they can be considered to be in commercial quantities.

Based on the foregoing analysis, we have preliminarily determined that Chang Chun has not met one of the threshold requirements for revocation (*i.e.,* sales in commercial quantities during the three consecutive PORs). We therefore preliminarily intend not to revoke the order, with respect to PVA produced and also exported by Chang Chun, if these preliminary findings are affirmed in our final results.

Preliminary Results of Review

As a result of this review, we preliminarily determine that the following margin exists for the period May 1, 1998 through April 30, 1999:

Manufacturer/exporter	Margin (percent)
Chang Chun Petrochemical Co., Ltd	0.00

Pursuant to 19 CFR 351.224(b), the Secretary will disclose to the parties to the proceeding the calculations performed in connection with this review, within five days after the date of publication of the preliminary results of this review. Any interested party may request a hearing within 30 days of publication. Any hearing, if requested, will be held 44 days after the date of publication or the first business day thereafter.

Issues raised in hearings will be limited to those raised in the respective case briefs and rebuttal briefs. Case briefs from interested parties and rebuttal briefs, limited to the issues raised in the respective case briefs, may be submitted not later than 30 days and 37 days, respectively, from the date of publication of these preliminary results. Parties who submit case briefs or rebuttal briefs in this proceeding are requested to submit with each argument (1) a statement of the issue and (2) a brief summary of the argument. Parties are also encouraged to provide a summary of the arguments not to exceed five pages and a table of statutes, regulations and cases cited.

The Department will subsequently issue the final results of this administrative review, including the results of its analysis of issues raised in any such written briefs or at the hearing, if held, not later than 120 days after the date of publication of this notice.

Interested parties who wish to request a hearing or to participate if one is requested, must submit a written request to the Assistant Secretary for Import Administration, Room B–099, within 30 days of the date of publication of this notice. The request should contain: (1) the party's name, address and telephone number; (2) the number of participants; and (3) a list of issues to be discussed.

Cash Deposit and Assessment Requirements

The final results of this review shall be the basis for the assessment of the antidumping duties on entries of merchandise covered by this review and for future deposits of estimated duties. The Department shall determine, and the Customs Service shall assess, antidumping duties on all appropriate entries. Upon completion of this review, the Department will issue appraisement instructions directly to the Customs Service.

If these preliminary results are adopted in the final results, we will instruct the Customs Service to assess antidumping duties on all appropriate entries covered by this review for which any importer-specific assessment rates calculated in the final results of this review are above *de minimis* (*i.e.,* at or above 0.5 percent), in accordance with 19 CFR 351.106(c)(2). For assessment purposes, we intend to calculate importer-specific assessment rates for the subject merchandise by aggregating the dumping margins calculated for all U.S. sales to each importer and dividing this amount by the total entered value of the sales examined.

Furthermore, the following deposit requirements will be effective upon completion of the final results of this antidumping duty review for all shipments of PVA from Taiwan, entered, or withdrawn from warehouse, for consumption on or after the publication date of the final results of this administrative review, as provided by section 751(a) of the Act: (1) no cash deposit will be required for PVA from Taiwan that is produced by Chang Chun (unless the margin established for the

[1] Chang Chun's history of subject merchandise PVA sales is as follows: Chang Chun's 1st POR sales of subject PVA were 7.19% of its POI sales of subject PVA. Chang Chun's 2nd POR sales of subject PVA were 4.59% of its POI sales of subject PVA. Chang Chun's 3rd POR sales of subject PVA were 20.98% of its POI sales of subject PVA.

[2] As we noted in *Pure Magnesium from Canada; Final Results of Antidumping Duty Administrative Review and Determination Not To Revoke Order In Part,* 64 FR 12977, 12979 (March 16, 1999) (*Pure Magnesium from Canada*), commercial quantities is a threshold requirement that must be met by parties seeking revocation. We also note that while the regulation requiring sales in commercial quantities may have developed from the unreviewed intervening year regulation, its application in all revocation cases based on the absence of dumping is reasonable and mandated by the regulations. The application of this requirement to all such cases is reflected not only in the provision for unreviewed intervening years (*see* 19 CFR 351.222 (d)(1)), but also in the new general requirement that parties seeking revocation certify to sales in commercial quantities in each of the years on which revocation is to be based. *See* 19 CFR 351.222(e)(1)(ii). This requirement ensures that the Department's revocation determination is based upon a sufficient breadth of information regarding a company's normal commercial practice. *See Pure Magnesium from Canada,* at 64 FR 12979.

company in the final results of this review is above *de minimis*); (2) for exporters not covered in this review, but covered in the LTFV investigation or prior reviews, the cash deposit rate will continue to be the company-specific rate from the LTFV investigation or the prior review; (3) if the exporter is not a firm covered in this review, a prior review, or the original LTFV investigation, but the manufacturer is, the cash deposit rate will be the rate established for the most recent period for the manufacturer of the merchandise; and (4) the cash deposit rate for all other manufacturers or exporters will continue to be 19.21 percent, the ''All Others'' rate made effective by the LTFV investigation. These requirements, when imposed, shall remain in effect until publication of the final results of the next administrative review.

This notice serves as a preliminary reminder to importers of their responsibility under 19 CFR 351.402(f)(2) to file a certificate regarding the reimbursement of antidumping duties prior to liquidation of the relevant entries during this review period. Failure to comply with this requirement could result in the Secretary's presumption that reimbursement of antidumping duties occurred and the subsequent assessment of double antidumping duties.

This administrative review and notice are in accordance with sections 751(a)(1) and 777(i) of the Act and 19 CFR 351.213.

Dated: May 30, 2000.

Troy H. Cribb,

Acting Assistant Secretary for Import Administration.

[FR Doc. 00–14206 Filed 6–5–00; 8:45 am]

BILLING CODE 3510–DS–P

DEPARTMENT OF COMMERCE

International Trade Administration

[A–201–504]

Porcelain-on-Steel Cookware From Mexico: Amended Final Results of Antidumping Duty Administrative Review

AGENCY: Import Administration, International Trade Administration, Department of Commerce.

EFFECTIVE DATE: June 6, 2000.

FOR FURTHER INFORMATION CONTACT: Katherine Johnson or David J. Goldberger, Import Administration, International Trade Administration, U.S. Department of Commerce, 14th Street and Constitution Avenue, N.W., Washington, D.C. 20230; telephone, (202) 482–4929 or (202) 482–4136, respectively.

Applicable Statute and Regulations

Unless otherwise indicated, all citations to the Tariff Act of 1930, as amended (the Act), are references to the provisions effective January 1, 1995, the effective date of the amendments made to the Act by the Uruguay Round Agreements Act (URAA). In addition, unless otherwise indicated, all citations to the Department of Commerce's (Department's) regulations are to 19 CFR Part 351 (1998).

Scope of the Review

Imports covered by this review are shipments of porcelain-on-steel cookware, including tea kettles, which do not have self-contained electric heating elements. All of the foregoing are constructed of steel and are enameled or glazed with vitreous glasses. This merchandise is currently classifiable under Harmonized Tariff Schedule of the United States (HTSUS) subheading 7323.94.00. Kitchenware currently classifiable under HTSUS subheading 7323.94.00.30 is not subject to the order. Although the HTSUS subheadings are provided for convenience and Customs purposes, our written description of the scope of this proceeding is dispositive.

Amendment to Final Results

In accordance with section 751(a) of the Act, on May 4, 2000, we issued our final results of the 1997–1998 administrative review of the antidumping duty order on porcelain-on-steel cookware from Mexico in which we determined that sales of porcelain-on-steel cookware from Mexico were made at less than normal value (65 FR 30068, May 10, 2000). On May 9, 2000, we received an allegation, timely filed pursuant to 19 CFR 351.224(c)(2), from the petitioner, Columbian Home Products, LLC, that the Department made a ministerial error in its final results. We did not receive ministerial error allegations from Cinsa, S.A. de C.V. (Cinsa) or Esmaltaciones de Norte America, S.A. de C.V. (ENASA).

After analyzing petitioner's submission, we have determined, in accordance with 19 CFR 351.224, that a ministerial error was made in our final margin calculations for Cinsa. Specifically, certain indirect selling expenses incurred in Mexico by Cinsa in connection with sales to the unaffiliated customer in the United States, which were formerly classified as export prices sales, were not: (1) Deducted from the constructed export price (CEP) calculation; (2) included in the pool of U.S. indirect selling expenses used to calculate the CEP offset; and (3) included in the calculation of CEP profit due to a programming error. We have now corrected the programming error. For a detailed discussion of the ministerial error allegation and the Department's analysis, see the Memorandum to Louis Apple from the Team, dated May 30, 2000.

Therefore, in accordance with section 751(h) of the Act and 19 CFR 351.224(e), we are amending the final results of the 1997–1998 antidumping duty administrative review on porcelain-on-steel cookware from Mexico.

The revised weighted-average dumping margins are as follows:

Manufacturer/ exporter	Original final margin percentage	Revised final margin percentage
Cinsa	8.96	9.31
ENASA	27.37	27.37

This amended final results of administrative review and notice are in accordance with section 751(a)(1) of the Act (19 U.S.C. 1675(a)(1)), section 777(i) of the Act (19 U.S.C. 1677f(i)), and 19 CFR 351.210(c).

Dated: May 20, 2000.

Troy H. Cribb,

Acting Assistant Secretary for Import Administration.

[FR Doc. 00–14203 Filed 6–5–00; 8:45 am]

BILLING CODE 3510–DS–P

DEPARTMENT OF COMMERCE

National Oceanic and Atmospheric Administration

[I.D. 052500A]

Taking and Importing of Marine Mammals

AGENCY: National Marine Fisheries Service (NMFS), National Oceanic and Atmospheric Administration (NOAA), Commerce.

ACTION: Notice of affirmative finding.

SUMMARY: The Assistant Administrator for Fisheries, NMFS, issued an affirmative finding for the Republic of Ecuador under the Marine Mammal Protection Act (MMPA) on May 31, 2000. This affirmative finding allows the continued importation into the United States of yellowfin tuna and yellowfin tuna products harvested in the eastern tropical Pacific Ocean (ETP) after March 3, 1999, by Ecuadorian-flag purse seine vessels or vessels operating under Ecuadorian jurisdiction greater

than 400 short tons (362.8 mt) carrying capacity. The affirmative finding was based on documentary evidence submitted by the Republic of Ecuador and obtained from the Inter-American Tropical Tuna Commission (IATTC). This finding remains in effect through March 31, 2001.

DATES: Effective May 31, 2000 through March 31, 2001.

FOR FURTHER INFORMATION CONTACT: Regional Administrator, Southwest Region, NMFS, 501 West Ocean Boulevard, Suite 4200, Long Beach, California, 90802–4213, Phone 562–980–4000, Fax 562–980–4018.

SUPPLEMENTARY INFORMATION: The MMPA, 16 U.S.C. 1361 *et seq*, as amended by the International Dolphin Conservation Program Act (IDCPA) (Pub. L. 105–42), allows the entry into the United States of yellowfin tuna harvested by purse seine vessels in the ETP under certain conditions. If requested by the harvesting nation, the Assistant Administrator for Fisheries, NOAA, will determine whether to make an affirmative finding based upon documentary evidence provided by the Republic of the harvesting nation, by the International Dolphin Conservation Program (IDCP), the IATTC, and/or the Department of State. A finding will remain valid for 1 year (April 1 through March 31) or for such other period as the Assistant Administrator for Fisheries may determine. The harvesting nation must submit an application directly to the Assistant Administrator for Fisheries for the first affirmative finding. Every 5 years, the Republic of the harvesting nation, must request an affirmative finding and submit the required documentary evidence directly to the Assistant Administrator for Fisheries. The Assistant Administrator may require the submission of additional supporting documentation or verification of statements made in connection with requests to allow importations. An affirmative finding applies to tuna and tuna products that were harvested in the ETP by purse seine vessels of the nation, and applies to any tuna harvested in the ETP purse seine fishery after March 3, 1999, the effective date of the IDCPA.

The affirmative finding process requires that the harvesting nation meet several conditions related to compliance with the IDCP. To issue an annual affirmative finding NMFS must receive the following information:

1. A statement requesting an affirmative finding;
2. Evidence of membership in the IATTC;
3. Evidence that a nation is meeting its obligations to the IATTC, including financial obligations;
4. Evidence that a nation is complying with the IDCP. For example, national laws and regulations implementing the Agreement on the IDCP and information that the nation is enforcing those laws and regulations;
5. Evidence of a tuna tracking and verification program comparable to the U.S. tracking and verification regulations at 50 CFR 216.94;
6. Evidence that the national fleet dolphin mortality limits (DMLs) were not exceeded in the previous calendar;
7. Evidence that the national fleet per-stock per-year mortality limits, if they are allocated to countries, were not exceeded in the previous calendar year;
8. Authorization for the IATTC to release to the Assistant Administrator for Fisheries, complete, accurate and timely information necessary to verify and inspect Tuna Tracking Forms; and
9. Authorization for the IATTC to release to the Assistant Administrator for Fisheries information whether a nation is meeting its obligations of membership to the IATTC and whether a nation is meeting its obligations under the IDCP including managing (not exceeding) its national fleet DMLs or its national fleet per-stock per-year mortality limits. A nation may opt to provide this information directly to NMFS on an annual basis or to authorize the IATTC to release the information to NMFS in years when NMFS will review and consider whether to issue an affirmative finding determination without an application from the harvesting nation.

An affirmative finding will be terminated, in consultation with the Secretary of State, if the Assistant Administrator for Fisheries determines that the requirements of 50 CFR 216.24(f)(9) are no longer being met or that a nation is consistently failing to take enforcement actions on violations which diminish the effectiveness of the IDCP. Every 5 years, the Republic of the harvesting nation, must request an affirmative finding and submit the required documentary evidence directly to the Assistant Administrator for Fisheries.

The Assistant Administrator for Fisheries reviewed the application and documentary evidence submitted by the Republic of Ecuador and determined that the requirements under the MMPA to receive an affirmative finding have been met for the purposes of issuing an affirmative finding for the period April 1—March 31, 2001. On May 31, 2000, after consultation with the Department of State, NMFS issued an affirmative finding allowing yellowfin tuna and products derived from yellowfin tuna harvested in the ETP by Ecuadorian-flag purse seine vessels or vessels under Ecuadorian jurisdiction greater than 400 short tons (362.8 metric tons) carrying capacity after March 3, 1999, to be imported into the United States. In subsequent years 2001 through 2004, the Assistant Administrator will determine on an annual basis whether the Republic of Ecuador is meeting the requirements under section 101 (a)(2)(B) and (C) of the MMPA. NMFS will use documentary evidence provided by the IATTC and the Department of State or the harvesting nation, on an annual basis to determine whether the finding should be renewed. If necessary, documentary evidence may also be requested from the Republic of Ecuador to determine whether the affirmative finding criteria are being met. A new application is due by the Republic of Ecuador if the affirmative finding lapses or is revoked. If the affirmative finding for the Republic of Ecuador is renewed after NMFS's annual review in the years 2001 to 2004, the Republic of Ecuador must submit a new application in early 2005 for an affirmative finding to be effective for the period April 1, 2005, through March 31, 2006, and subsequent years.

Dated: May 31, 2000.

Penelope D. Dalton,

Assistant Administrator for Fisheries, National Marine Fisheries Service.

[FR Doc. 00–14199 Filed 6–5–00; 8:45 am]

BILLING CODE 3510–22–F

DEPARTMENT OF COMMERCE

National Oceanic and Atmospheric Administration

[I.D. 053000F]

Mid-Atlantic Fishery Management Council (MAFMC); Meetings

AGENCY: National Marine Fisheries Service (NMFS), National Oceanic and Atmospheric Administration (NOAA), Commerce.

ACTION: Notice of public meeting.

SUMMARY: The Mid-Atlantic Fishery Management Council and its Squid, Mackerel, and Butterfish Committee, Dolphin/Wahoo Committee, Comprehensive Management Committee, Habitat Committee, Executive Committee, and Law Enforcement Committee will hold a public meeting.

DATES: The meetings will be held on Tuesday, June 20, 2000 to Thursday,

June 22, 2000. See **SUPPLEMENTARY INFORMATION** for specific dates and times.

ADDRESSES: This meeting will be held at the Danford's Inn, 25 E. Broadway, Port Jefferson, NY; telephone: 1–800–332–6367.

Council address: Mid-Atlantic Fishery Management Council, 300 S. New Street, Dover, DE 19904; telephone: 302–674–2331.

FOR FURTHER INFORMATION CONTACT: Daniel T. Furlong, Executive Director, Mid-Atlantic Fishery Management Council; telephone: 302–674–2331, ext. 19.

SUPPLEMENTARY INFORMATION: On Tuesday, June 20th, the Squid, Mackerel and Butterfish Committee will meet from 1:00–5:00 p.m. On Wednesday, June 21st, the Dolphin/Wahoo Committee will meet from 8:00–9:00 a.m. The Comprehensive Management Committee will meet from 9:00–12:00 p.m. The Habitat Committee will meet from 1:00 p.m. until 4:00 p.m. The Executive Committee will meet from 3:00 p.m. until 5:00 p.m. On Thursday, June 22nd, the Law Enforcement Committee will meet from 8:00 a.m. until 9:00 a.m. Council will convene at 9:00 a.m. and will be in session until 1:00 p.m.

Agenda items for this meeting are: Discuss actions necessary to remedy disapproved portion of Amendment 8 (gear impacts on Essential Fish Habitat) to the Squid, Mackerel, and Butterfish Fishery Management Plan (FMP). Consider additional areas to be identified as Essential Fish Habitat for *Illex*. Consider revising quota setting procedure for *Illex* (allow in-season quota adjustment). Consider extending moratorium on entry to *Illex* fishery. Consider measures to protect *Loligo* egg masses (possible season/area closures). Consider controlled access plan for Atlantic mackerel fishery. Review and comment on South Atlantic Fishery Management Council Dolphin/Wahoo FMP. Develop recommendation(s) regarding Dolphin/Wahoo for presentation to and action by MAFMC. Discuss and prioritize cooperative research items associated with MAFMC's research set aside initiative. Discuss and provide comments on ''NMFS Budget Review Project. Discuss and identify Council's habitat research priorities. Discuss and clarify role of committee regarding meeting Council's habitat responsibilities. Review MAFMC's first half budget status/performance. Discuss audit report findings for FY95, FY96, FY97, and FY98. Discuss recent Executive Order regarding establishment of marine reserves. Comment on enforceability of Dolphin/Wahoo proposed management measures. Finalize and approve Fishery Award Program and related forms. Approve operational guidelines for the Law Enforcement Committee. The Council will also approve minutes from its May, 2000 meeting, review and comment on May meeting actions, and receive organizational reports from the NMFS Regional Administrator, NMFS Science Center Director, NOAA Office of General Counsel, U.S. Fish and Wildlife, Federal Enforcement units and the Atlantic States Marine Fisheries Commission. It will also receive Committee reports from the following committees: New England Council, South Atlantic Council, Demersal, Squid, Mackerel, and Butterfish, Dolphin/Wahoo, Comprehensive Management, Habitat, Executive and Law Enforcement.

Although non-emergency issues not contained in this agenda may come before the MAFMC for discussion, these issues may not be the subject of formal Council action during this meeting. MAFMC action will be restricted to those issues specifically listed in this notice and any issues arising after publication of this notice that require emergency action under section 305(c) of the Magnuson-Stevens Act, provided the public has been notified of the MAFMC's intent to take final actions to address such emergencies.

Special Accommodations

These meetings are physically accessible to people with disabilities. Requests for sign language interpretation or other auxiliary aids should be directed to Joanna Davis at the Council (see **ADDRESSES**) at least 5 days prior to the meeting date.

Dated: May 31, 2000.

Richard W. Surdi,

Acting Director, Office of Sustainable Fisheries, National Marine Fisheries Service.

[FR Doc. 00–14200 Filed 6–5–00; 8:45 am]

BILLING CODE 3510–22–F

DEPARTMENT OF COMMERCE

National Oceanic and Atmospheric Administration

[I.D.052400A]

Marine Mammals; File No. 555–1565

AGENCY: National Marine Fisheries Service (NMFS), National Oceanic and Atmospheric Administration (NOAA), Commerce.

ACTION: Receipt of application.

SUMMARY: Notice is hereby given that James T. Harvey (Principal Investigator), Moss Landing Marine Laboratories, P.O. Box 450, Moss Landing, CA 95039, has applied in due form for a permit to take Pacific harbor seals (*Phoca vitulina richardsi*) for purposes of scientific research.

DATES: Written or telefaxed comments must be received on or before July 6, 2000.

ADDRESSES: The application and related documents are available for review upon written request or by appointment in the following office(s):

Permits and Documentation Division, Office of Protected Resources, NMFS, 1315 East-West Highway, Room 13130, Silver Spring, MD 20910 (301/713–2289);

Southwest Region, NMFS, 501 West Ocean Blvd., Suite 4200, Long Beach, CA 90802 (562/980–4001); and

Northwest Region, NMFS, 7600 Sand Point Way NE, BIN C15700, Seattle, WA 98115 (206/526–6150).

FOR FURTHER INFORMATION CONTACT: Simona Roberts or Ruth Johnson, 301/713–2289.

SUPPLEMENTARY INFORMATION: The subject permit is requested under the authority of the Marine Mammal Protection Act of 1972, as amended (MMPA; 16 U.S.C. 1361 *et seq.*), and the Regulations Governing the Taking and Importing of Marine Mammals (50 CFR part 216).

The applicant seeks authorization to capture, handle and tag 1,600 Pacific harbor seals per year of all age and sex classes near haul-out sites throughout California, Oregon and Washington. Captured seals would be subject to all or some of the following activities: blood and tissue sampling, flipper tagging, PIT tagging, branding, lavaging, and video camera attachment. Acoustic playback experiments and scat collection would also take place around the haul-out sites. In addition, the applicant seeks authorization to surgically implant radio tags in 15 captive, rehabilitated Pacific harbor seals and to conduct feeding studies on 12 captive, rehabilitated Pacific harbor seals.

In compliance with the National Environmental Policy Act of 1969 (42 U.S.C. 4321 *et seq.*), an initial determination has been made that the activity proposed is categorically excluded from the requirement to prepare an environmental assessment or environmental impact statement.

Written comments or requests for a public hearing on this application should be mailed to the Chief, Permits

and Documentation Division, F/PR1, Office of Protected Resources, NMFS, 1315 East-West Highway, Room 13705, Silver Spring, MD 20910. Those individuals requesting a hearing should set forth the specific reasons why a hearing on this particular request would be appropriate.

Comments may also be submitted by facsimile at (301) 713–0376, provided the facsimile is confirmed by hard copy submitted by mail and postmarked no later than the closing date of the comment period. Please note that comments will not be accepted by e-mail or by other electronic media.

Concurrent with the publication of this notice in the **Federal Register**, NMFS is forwarding copies of this application to the Marine Mammal Commission and its Committee of Scientific Advisors.

Dated: May 31, 2000.

Ann D. Terbush,

Chief, Permits and Documentation Division, Office of Protected Resources, National Marine Fisheries Service.

[FR Doc. 00–14198 Filed 6–5–00; 8:45 am]

BILLING CODE 3510–22–F

DEPARTMENT OF COMMERCE

National Oceanic and Atmospheric Administration

[I.D. 050500F]

Taking of Threatened or Endangered Marine Mammals Incidental to Commercial Fishing Operations; Proposed Permit

AGENCY: National Marine Fisheries Service (NMFS), National Oceanic and Atmospheric Administration (NOAA), Commerce.

ACTION: Notice of proposal for issuance of permit; request for comments.

SUMMARY: NMFS proposes to issue a permit for a period of three years, to authorize the incidental, but not intentional, taking of four stocks of threatened or endangered marine mammals by the California/Oregon drift gillnet fishery. The four stocks are: (1) Fin whale, California/Oregon/Washington stock; (2) Humpback whale, California/Oregon/Washington-Mexico stock; (3) Steller sea lion, eastern stock; and (4) Sperm whale, California/Oregon/Washington stock. This authorization is based on a determination that this incidental take will have a negligible impact on the affected marine mammal stocks.

DATES: Comments must be received at the appropriate address or fax number (see **ADDRESSES**), no later than 5 p.m. Pacific Standard Time, by July 21, 2000. Comments will not be accepted if submitted via e-mail or Internet.

ADDRESSES: Comments on this proposed permit and requests for reference materials should be sent to Tim Price, Protected Resources Division, National Marine Fisheries Service, Southwest Region, 501 West Ocean Blvd., Suite 4200, Long Beach, CA 90802–4213. Comments may also be sent via facsimile (fax) to 562–980–4027.

FOR FURTHER INFORMATION CONTACT: Tim Price, NMFS, Southwest Region, Protected Resources Division, (562) 980–4029.

SUPPLEMENTARY INFORMATION: Section 101(a)(5)(E) of the Marine Mammal Protection Act (MMPA) requires the authorization of the incidental taking of individuals from marine mammal stocks listed as threatened or endangered under the ESA in the course of commercial fishing operations if NMFS determines that: (1) incidental mortality and serious injury will have a negligible impact on the affected species or stock; (2) a recovery plan has been developed or is being developed for such species or stock under the ESA; and (3) where required under section 118 of the MMPA, a monitoring program has been established, vessels engaged in such fisheries are registered in accordance with section 118 of the MMPA, and a take reduction plan has been developed or is being developed for such species or stock.

On August 31, 1995 (60 FR 45399), NMFS issued permits for fisheries meeting the conditions under section 101(a)(5)(E) of the MMPA. At that time, NMFS did not issue a permit to the California/Oregon drift gillnet fishery for the California/Oregon/Washington-Mexico humpback whale stock or the California/Oregon/Washington sperm whale stock because NMFS was unable to determine that the estimated mortality and serious injury incidental to commercial fishing operations was negligible. In addition, in 1995, NMFS did not consider issuing a permit for the incidental mortality and serious injury of the California/Oregon/Washington fin whale stock because there had been no reported incidental takes at that time, and NMFS had no reason to anticipate any such takes. However, NMFS did determine that the mortality and serious injury incidental to commercial fishing operations was negligible for the eastern Steller sea lion stock and issued a permit for that stock. On December 30, 1998 (63 FR 71894), NMFS extended the permit until June 30, 1999. At that time, NMFS announced that it was reviewing the criteria for issuance of permits and evaluating whether the criteria were adequate or if changes should be made. No comments were received. On May 27, 1999 (64 FR 28800), NMFS proposed the issuance of permits for those fisheries that have negligible impacts on marine mammal stocks listed as threatened or endangered under the ESA for a period of 3 years. In addition, that document provided further guidance about the process for determining negligible impact. A permit for the mortality and serious injury of the Steller sea lion incidental to the California/Oregon drift gillnet fishing operations was also proposed. Based on new information, NMFS did not finalize the proposed permits.

Since 1995, NMFS has gathered additional data on the status of listed marine mammals. Based on the more recent survey data and analyses, the Stock Assessment Reports contain revised estimates of potential biological removal (PBR) levels. PBR is defined in the MMPA as ''the maximum number of animals, not including natural mortalities, that may be removed from a stock while allowing that stock to reach or maintain its optimum sustainable population'' (16 U.S.C. 1362(20)). Also, since 1995, NMFS has developed and implemented the Pacific Offshore Cetacean Take Reduction Plan (the Plan) (62 FR 51805) for the California/Oregon drift gillnet fishery. The initial goal of a take reduction plan is to reduce marine mammal bycatch in the fishery to levels below PBR for all stocks. Since the implementation of the Plan, overall cetacean mortality in this fishery has been reduced by 70 percent. For these reasons, NMFS is re-evaluating whether issuance of a permit under section 101(a)(5)(E) of the MMPA for the California/Oregon drift gillnet fishery is appropriate.

Process and Criteria for Issuing Permits

Section 101(a)(5)(E) of the Marine Mammal Protection Act (MMPA) requires the authorization of the incidental taking of individuals from marine mammal stocks listed as threatened or endangered under the ESA in the course of commercial fishing operations if NMFS determines, among other criteria, that incidental mortality and serious injury will have a negligible impact on the affected species or stock. ''Negligible impact'' as defined in 50 CFR 216.103 and as applies here is, ''an impact resulting from the specified activity that cannot be reasonably expected to, and is not reasonably likely to, adversely affect the species or stock through effects on annual rates of recruitment or survival.''

In 1990, the Marine Mammal Commission (MMC) submitted scientific guidelines to NMFS to govern the incidental taking of marine mammals in the course of commercial fishing operations. In those guidelines, the MMC recommended NMFS determine negligible impact if the mortality and serious injury incidental to commercial fishing operations would cause no more than a 10 percent increase in the time to recovery. NMFS incorporated the MMC's recommendation of negligible impact criteria into the 1992 legislative proposal. Participants at NMFS' 1994 PBR workshop agreed, and determined that authorized levels of human-related mortality should increase recovery time of endangered stocks by no more than 10 percent. Therefore, a default recovery factor of 0.1 was chosen to use in the PBR equation for endangered stocks of marine mammals (Barlow *et al.*, 1995).

On August 31, 1995 (60 FR 45399), NMFS issued permits for fisheries meeting the conditions under section 101(a)(5)(E) of the MMPA. As an interim measure, NMFS considered a total annual serious injury and mortality of not more than 10 percent of a stock's PBR level to be negligible. In 1999, NMFS published a notice of proposal to issue permits under section 101(a)(5)(E) of the MMPA. In the 1999 proposal, NMFS again applied a serious injury and mortality of not more than 10 percent of a stock's PBR level as the starting point for negligible impact determinations. However, NMFS recognized that a strict application of 10 percent of PBR was not appropriate in some cases and that such a criterion would not be the only factor in evaluating whether a particular level of take would be considered negligible.

Because population abundance and fishery-related mortality information have varying degrees of uncertainty, NMFS considers factors such as population trends and reliability of abundance and mortality estimates in calculating PBR. When calculating a PBR for species listed as endangered under the ESA, NMFS uses a value of 0.1 for the recovery factor based on the rationale that this would not cause more than a 10 percent increase in the time to recovery (Barlow *et al.*, 1995). Using a PBR containing a recovery factor of 0.1 would allow a large portion of the stock's annual net production to be used for recovery rather than being authorized for removal due to incidental mortality. Therefore, when incidental mortality and serious injury was below the stock's PBR, such mortality and serious injury would have no more than a negligible impact on the stock.

In 1995, NMFS limited a determination of negligible impact only to those cases in which mortality and serious injury incidental to commercial fishing operations did not exceed 10 percent of any stock's PBR. When that criterion was applied to the cases in which the PBR equation contained a recovery factor of 0.1, the result was a situation where authorized mortality would cause only a small portion (10 percent) of the mortality that would cause a negligible impact according to the MMC's recommendation. Therefore, the standard was too restrictive for those fisheries that take endangered marine mammals with a recovery factor of 0.1 in the PBR calculation. Consequently, in making a negligible impact determination, NMFS has decided to use case-specific analyses in those cases where incidental mortality and serious injury exceeded 10 percent of an endangered stock's PBR in determining whether the estimated level of mortality or serious injury would delay recovery by more than 10 percent. In the case of the 4 stocks of marine mammals addressed by this permit, NMFS evaluated whether the estimated level of mortality and serious injury would likely increase the recovery time by more than 10 percent. Takes below this level will be considered negligible.

Summary of Findings

NMFS has evaluated the best available information for stocks listed as threatened or endangered under the ESA and has determined on a stock-by-stock basis, whether the mortality and serious injury (using 3-year averages 1997, 1998, 1999) incidental to the California/Oregon drift gillnet fishery that interacts with such stocks is having a negligible impact on such stocks (NMFS, 2000). Based on this assessment, NMFS concludes that the estimated mortality and serious injury caused by the California/Oregon drift gillnet fishery would cause no more than a 10–percent increase in the time to recovery for each of the four stocks of marine mammals addressed by this permit and is, therefore, negligible.

These stocks were then reviewed to confirm that: (1) a recovery plan has been developed or is being developed, and (2) where required under section 118 of the MMPA, a monitoring program has been established, vessels engaged in such fisheries are registered, and a take reduction plan has been, or is being, developed.

For the following stocks with documented evidence of fishery-related interactions, NMFS has determined that the mortality and serious injury incidental to the California/Oregon drift gillnet fishery will have a negligible impact and proposes to issue a permit for incidental takes of:

(1) Fin whale, California/Oregon/Washington stock;

(2) Humpback whale, California/Oregon/Washington-Mexico stock;

(3) Steller sea lion, eastern stock; and

(4) Sperm whale, California/Oregon/Washington stock.

A stock-by-stock summary of the negligible impact determination follows.

Fin whale, California/Oregon/Washington stock: The PBR for this stock is 2.1 whales per year. After the 1997 implementation of the Plan, overall cetacean entanglement rates in the California/Oregon drift gillnet fishery dropped considerably. Using a 3-year (1997–1999) average, the annual mean mortality and serious injury rate from the California/Oregon drift gillnet fishery is estimated to be as low as 1.7 or as high as 2.3, depending on the methodology used. However, during the past 10 years, only one fin whale has been observed taken in this fishery, indicating a remote likelihood of a fin whale take in the California/Oregon drift gillnet fishery. When the mortality and serious injury rate is calculated from a more broad-based set of data than the 3-year period under the Plan, estimated mortality is low enough that it could be considered a negligible impact.

Humpback whale, California/Oregon/Washington-Mexico stock: The PBR level for this stock is 1.7 whales per year. Using a 3-year average (1997–1999), the mean annual mortality and serious injury rate from the California/Oregon drift gillnet fishery is estimated to be 0.0 humpback whales. One observed humpback whale entanglement in 1999 was released alive without any trailing gear and was not considered a serious injury or mortality. Since the beginning of the observer program in 1990, there have been no reported mortalities or serious injuries of humpback whales.

Steller sea lion, eastern stock: The PBR level for this stock is 1,368 animals per year. Fishery observers monitored the California/Oregon drift gillnet fishery between 1990 and 1999. In both 1992 and 1994, one Steller sea lion mortality was observed incidental to this fishery. Using a 3-year average (1997–1999), the mean annual mortality and serious injury rate from the California/Oregon drift gillnet fishery is estimated to be 0.0 animals for the California/Oregon drift gillnet fishery.

Sperm whale, California/Oregon/Washington stock: The PBR level for this stock is 2.0 whales per year. Using a 3-year average (1997–1999), the mean

annual mortality and serious injury rate from the California/Oregon drift gillnet fishery is estimated to be 1.7 sperm whales. In 1998, one sperm whale was observed killed in a net that was not in compliance with the Plan. The Pacific Offshore Cetacean Take Reduction Team (The Team) and the Pacific Scientific Review Group both recommended no further strategies to reduce sperm whale entanglement be taken until the effectiveness of pingers is better understood. At the recommendation of The Team, NMFS conducted workshops to educate vessel operators on the need to use the full complement of pingers required by the Plan. NMFS enforcement also trained the U.S. Coast Guard about the requirements of the Plan and requested their assistance with at-sea enforcement.

NMFS prepared an Environmental Assessment (EA) on the final rule to implement the Plan (62 FR 51805). This action falls within the scope of that EA and the environmental consequences described in that action, and there have been no changes to the fishery subsequent to issuing the EA. Therefore, this action qualifies for a categorical exclusion under section 5.05b of NOAA Administrative Order 216–6 because a prior NEPA analysis for the same action demonstrated that the action will not have significant impacts on the quality of the human environment.

Issuance of Permits

Based on requirements of section 101(a)(5)(E) of the MMPA, NMFS proposes to issue a permit to allow the incidental, but not intentional, taking of four stocks of endangered or threatened marine mammals to the California/Oregon drift gillnet fishery: (1) Fin whale, California/Oregon/Washington stock; (2) Humpback whale, California/Oregon/Washington-Mexico stock; (3) Steller sea lion, eastern stock; and (4) Sperm whale, California/Oregon/Washington stock. These permits may be suspended or revoked if the level of take is likely to result in an impact that is more than negligible.

References

Barlow, J., S. Swartz, T. Eagle, and P. Wade. 1995. U.S. Marine mammal stock assessments: guidelines for preparation, background, and a summary of the 1995 assessments. U.S. Department of Commerce, NOAA Technical Memorandum NMFS–SWFSC–219. 162 p.

National Marine Fisheries Service. 2000. Assessment for issuing a permit under section 101(a)(5)(E) of the Marine Mammal Protection Act to the California/Oregon Drift Gillnet Fishery. Southwest Region, Protected Resources Division.

Wade, P.R. 1998. Calculating limits to the allowable human-caused mortality of cetaceans and pinnipeds. (Mar. Mamm. Sci., 1491): 1–37.

Dated: May 31, 2000.

Donald R. Knowles,

Director, Office of Protected Resources, National Marine Fisheries Service.

[FR Doc. 00–14201 Filed 6–5–00; 8:45 am]

BILLING CODE 3510–22–F

CORPORATION FOR NATIONAL AND COMMUNITY SERVICE

Proposed Information Collection; Comment Request

AGENCY: Corporation for National and Community Service.

ACTION: Notice.

SUMMARY: The Corporation for National and Community Service (hereinafter the ''Corporation''), as part of its continuing effort to reduce paperwork and respondent burden, conducts a preclearance consultation program to provide the general public and Federal agencies with an opportunity to comment on proposed and/or continuing collections of information in accordance with the Paperwork Reduction Act of 1995 (PRA95) (44 U.S.C. 3506(c)(2)(A)). This program helps to ensure that requested data can be provided in the desired format, reporting burden (time and financial resources) is minimized, collection instruments are clearly understood, and the impact of collection requirement on respondents can be properly assessed. This form is available in alternate formats. Individuals who use a telecommunications device for the deaf (TTY/TDD) may call (202) 606–5256 between the hours of 9:00 a.m. and 4:30 p.m. Eastern time, Monday through Friday.

Currently, the Corporation is soliciting comments concerning the revision of its Financial Status Report form (Standard Form 269A) for National and Community Services Act programs. Copies of the information collection request can be obtained by contacting the office listed below in the **ADDRESSES** section of this notice.

DATES: Written comments must be submitted to the office listed in the **ADDRESSES** section by August 7, 2000.

ADDRESSES: Send comments to the Corporation for National and Community Service, Attn: Bruce Cline, Director, Grants Management Office, 1201 New York Avenue, N.W., Suite 8711, Washington, D.C., 20525.

FOR FURTHER INFORMATION CONTACT: Bruce Cline, (202) 606–5000, ext. 440.

SUPPLEMENTARY INFORMATION:

Comment Request

The Corporation is particularly interested in comments which:

- Evaluate whether the proposed collection of information is necessary for the proper performance of the functions of the Corporation, including whether the information will have practical utility;
- Evaluate the accuracy of the agency's estimate of the burden of the proposed collection of information, including the validity of the methodology and assumptions used;
- Enhance the quality, utility and clarity of the information to be collected; and
- Minimize the burden of the collection of information on those who are to respond, including the use of appropriate automated, electronic, mechanical, or other technological collection techniques or other forms of information technology, e.g., permitting electronic submissions of responses.

Background

The National and Community Service Act of 1990, as amended, specifically sections 12571 and 12594, require matching contributions of varying proportion for both program (12571) and member support (12594) costs. Accordingly, our grantees must provide the Corporation information on match according to budget sections (Section A is member support and Sections B–G are other program support costs.) Without these breakdowns, the Corporation cannot accurately calculate match or determine whether the legislated levels are being met.

Current Action

The Corporation seeks OMB approval to request the required reporting information by allowing grantees to utilize the Remarks block, Section 12, of the Standard Form 269A, in the following format:

In Remarks, Section 12, please provide the following:

- For Recipient share of outlays (section 10—Transactions ''Previously Reported,'' ''This period,'' and ''Cumulative''), please list separately:

(1) Outlays from Budget Section B–G, and

(2) Outlays from Budget Section A for Transactions columns ''Previously Reported,'' ''This Period,'' and ''Cumulative.''

• For Federal Share of outlays (section 10—Transactions ''Previously Reported,'' ''This Period,'' and ''Cumulative''), please list separately:

(1) Outlays from Budget Section B–G; and

(2) Outlays from Budget Section A.

• Totals in each column should equal totals from section 10, row a. ''Total Outlays.''

Suggested format:

	Previously reported	This period	Cumulative
b. Recipient Share of Outlays:			
1. Outlays from Section B–G	$0	$0	$0
2. Outlays from Section A	0	0	0
c. Federal Share of Outlays:			
1. Outlays from Section B–G	0	0	0
2. Outlays from Section A	0	0	0
Totals	0	0	0

This information will not require any modification to the SF 269A. The Corporation will request the information from its grantees by an instruction letter in the beginning, and most grantees will continue to provide the information electronically from that point forward.

Type of Review: Request for additional information.

Agency: Corporation for National and Community Service.

Title: Standard Form 269A, Financial Status Report.

OMB Number: 0348–0038.

Agency Number: None.

Affected Public: Organizations with an approved grant.

Total Respondents: 350.

Frequency: 2 responses per grantee.

Average Time Per Response: 60 minutes.

Estimated Total Burden Hours: 700 hours.

Total Burden Cost (capital/startup): None.

Total Burden Cost (operating/maintenance): None.

Comments submitted in response to this notice will be summarized and/or included in the request for Office of Management and Budget approval of the information collection request; they will also become a matter of public record.

Dated: June 1, 2000.

Bruce H. Cline,

Director of Grants Management.

[FR Doc. 00–14102 Filed 6–5–00; 8:45 am]

BILLING CODE 6050–28–P

DEPARTMENT OF EDUCATION

Notice of Proposed Information Collection Requests

AGENCY: Department of Education.

ACTION: Notice of proposed information collection requested.

SUMMARY: The Leader, Information Management Group, Office of the Chief Information Officer, invites comments on the proposed information collection requests as required by the Paperwork Reduction Act of 1995.

DATES: Interested persons are invited to submit comments on or before August 7, 2000.

SUPPLEMENTARY INFORMATION: Section 3506 of the Paperwork Reduction Act of 1995 (44 U.S.C. Chapter 35) requires that the Office of Management and Budget (OMB) provide interested Federal agencies and the public an early opportunity to comment on information collection requests. OMB may amend or waive the requirement for public consultation to the extent that public participation in the approval process would defeat the purpose of the information collection, violate State or Federal law, or substantially interfere with any agency's ability to perform its statutory obligations. The Leader, Information Management Group, Office of the Chief Information Officer, publishes that notice containing proposed information collection requests prior to submission of these requests to OMB. Each proposed information collection, grouped by office, contains the following: (1) Type of review requested, *e.g.* new, revision, extension, existing or reinstatement; (2) Title; (3) Summary of the collection; (4) Description of the need for, and proposed use of, the information; (5) Respondents and frequency of collection; and (6) Reporting and/or Recordkeeping burden. OMB invites public comment.

The Department of Education is especially interested in public comment addressing the following issues: (1) Is this collection necessary to the proper functions of the Department; (2) will this information be processed and used in a timely manner; (3) is the estimate of burden accurate; (4) how might the Department enhance the quality, utility, and clarity of the information to be collected; and (5) how might the Department minimize the burden of this collection on the respondents, including through the use of information technology.

Dated: May 30, 2000.

William Burrow,

Leader, Information Management Group, Office of the Chief Information Officer.

Office of the Undersecretary

Type of Review: New.

Title: Moving Standards to the Classroom: A Study of Standards-based Mathematics Instruction in Six States.

Frequency: On Occasion.

Affected Public: State, Local, or Tribal Gov't, SEAs or LEAs.

Reporting and Recordkeeping Hour Burden:

Responses: 7,056.

Burden Hours: 9,300.

Abstract: Goals 2000 strives to help states develop high standards and then apply them toward improving instruction and student achievement. Based on information gathered from six diverse states, Moving Standards will evaluate the effectiveness of standards-based reform, focusing on the quality of supported activities and the effects of those activities on instructional practice and student achievement.

Requests for copies of the proposed information collection request may be accessed from *http://edicsweb.ed.gov,* or should be addressed to Vivian Reese, Department of Education, 400 Maryland Avenue, SW, Room 5624, Regional Office Building 3, Washington, D.C. 20202–4651. Requests may also be electronically mailed to the internet address OCIO_IMG_Issues@ed.gov or faxed to 202–708–9346. Please specify the complete title of the information collection when making your request.

Comments regarding burden and/or the collection activity requirements should be directed to Jacqueline Montague at (202) 708–5359 or via her internet address Jackie_Montague@ed.gov. Individuals who use a telecommunications device for the deaf (TDD) may call the Federal

Information Relay Service (FIRS) at 1–800–877–8339.

[FR Doc. 00–13930 Filed 6–5–00; 8:45 am]

BILLING CODE 4000–01–U

DEPARTMENT OF EDUCATION

Notice of Proposed Information Collection Requests

AGENCY: Department of Education.

SUMMARY: The Leader, Information Management Group, Office of the Chief Information Officer, invites comments on the proposed information collection requests as required by the Paperwork Reduction Act of 1995.

DATES: Interested persons are invited to submit comments on or before August 7, 2000.

SUPPLEMENTARY INFORMATION: Section 3506 of the Paperwork Reduction Act of 1995 (44 U.S.C. Chapter 35) requires that the Office of Management and Budget (OMB) provide interested Federal agencies and the public an early opportunity to comment on information collection requests. OMB may amend or waive the requirement for public consultation to the extent that public participation in the approval process would defeat the purpose of the information collection, violate State or Federal law, or substantially interfere with any agency's ability to perform its statutory obligations. The Leader, Information Management Group, Office of the Chief Information Officer, publishes that notice containing proposed information collection requests prior to submission of these requests to OMB. Each proposed information collection, grouped by office, contains the following: (1) Type of review requested, e.g. new, revision, extension, existing or reinstatement; (2) Title; (3) Summary of the collection; (4) Description of the need for, and proposed use of, the information; (5) Respondents and frequency of collection; and (6) Reporting and/or Recordkeeping burden. OMB invites public comment.

The Department of Education is especially interested in public comment addressing the following issues: (1) is this collection necessary to the proper functions of the Department; (2) will this information be processed and used in a timely manner; (3) is the estimate of burden accurate; (4) how might the Department enhance the quality, utility, and clarity of the information to be collected; and (5) how might the Department minimize the burden of this collection on the respondents, including through the use of information technology.

Dated: May 31, 2000.

William Burrow,

Leader, Information Management Group, Office of the Chief Information Officer.

Office of Special Education and Rehabilitative Services

Type of Review: Revision.

Title: Notice of Proposed Rulemaking (NPRM) to Amend 34 CFR Part 361.

Frequency: Annually.

Affected Public: State, Local, or Tribal Gov't, SEAs or LEAs; Businesses or other for-profit; Not-for-profit institutions.

Reporting and Recordkeeping Hour Burden: Responses: 82, Burden Hours: 1,002,050.

Abstract: The Secretary proposes to amend the regulations governing the State Vocational Rehabilitation Services Program. These amendments are necessary to implement changes to the Rehabilitation Act of 1973 made by the Rehabilitation Act Amendments of 1998, enacted on August 7, 1988, and as further amended in 1998 by technical amendments in the Reading Excellence Act and the Carl D. Perkins Vocational and Applied Technology Education Act Amendments of 1998, collectively referred to as the 1998 Amendments.

Requests for copies of the proposed information collection request may be accessed from *http://edicsweb.ed.gov*, or should be addressed to Vivian Reese, Department of Education, 400 Maryland Avenue, SW, Room 5624, Regional Office Building 3, Washington, D.C. 20202–4651. Requests may also be electronically mailed to the internet address OCIO__IMG__Issues@ed.gov or faxed to 202–708–9346. Please specify the complete title of the information collection when making your request.

Comments regarding burden and/or the collection activity requirements should be directed to Sheila Carey at (202) 708–6287 or via her internet address Sheila__Carey@ed.gov. Individuals who use a telecommunications device for the deaf (TDD) may call the Federal Information Relay Service (FIRS) at 1–800–877–8339.

[FR Doc. 00–14087 Filed 6–5–00; 8:45 am]

BILLING CODE 4000–01–P

DEPARTMENT OF EDUCATION

Submission for OMB Review; Comment Request

AGENCY: Department of Education.

SUMMARY: The Leader, Information Management Group, Office of the Chief Information Officer invites comments on the submission for OMB review as required by the Paperwork Reduction Act of 1995.

DATES: Interested persons are invited to submit comments on or before July 6, 2000.

ADDRESSES: Written comments should be addressed to the Office of Information and Regulatory Affairs, Attention: Danny Werfel, Desk Officer, Department of Education, Office of Management and Budget, 725 17th Street, N.W., Room 10235, New Executive Office Building, Washington, D.C. 20503 or should be electronically mailed to the internet address DWERFEL@OMB.EOP.GOV.

SUPPLEMENTARY INFORMATION: Section 3506 of the Paperwork Reduction Act of 1995 (44 U.S.C. Chapter 35) requires that the Office of Management and Budget (OMB) provide interested Federal agencies and the public an early opportunity to comment on information collection requests. OMB may amend or waive the requirement for public consultation to the extent that public participation in the approval process would defeat the purpose of the information collection, violate State or Federal law, or substantially interfere with any agency's ability to perform its statutory obligations. The Leader, Information Management Group, Office of the Chief Information Officer, publishes that notice containing proposed information collection requests prior to submission of these requests to OMB. Each proposed information collection, grouped by office, contains the following: (1) Type of review requested, e.g. new, revision, extension, existing or reinstatement; (2) Title; (3) Summary of the collection; (4) Description of the need for, and proposed use of, the information; (5) Respondents and frequency of collection; and (6) Reporting and/or Recordkeeping burden. OMB invites public comment.

Dated: May 30, 2000.

William Burrow,

Leader, Information Management Group, Office of the Chief Information Officer.

Office of the Undersecretary

Type of Review: Reinstatement.

Title: Class-Size Reduction Program: 2000–2001 Implementation Report.

Frequency: Annually.

Affected Public: State, Local, or Tribal Gov't, SEAs or LEAs.

Reporting and Recordkeeping Hour Burden:

Responses: 800.

Burden Hours: 800.

Abstract: This study is being conducted to inform the Department's

performance indicators for the Government Performance and Results Act report as well as to inform the budget deliberations in Congress for the Class-Size Reduction program.

Requests for copies of the proposed information collection request may be accessed from *http://edicsweb.ed.gov,* or should be addressed to Vivian Reese, Department of Education, 400 Maryland Avenue, SW, Room 5624, Regional Office Building 3, Washington, D.C. 20202–4651. Requests may also be electronically mailed to the internet address OCIO_IMG_Issues@ed.gov or faxed to 202–708–9346. Please specify the complete title of the information collection when making your request. Comments regarding burden and/or the collection activity requirements should be directed to Jackie Montague at (202) 708–5359 or via her internet address Jackie__Montague@ed.gov. Individuals who use a telecommunications device for the deaf (TDD) may call the Federal Information Relay Service (FIRS) at 1–800–877–8339.

[FR Doc. 00–13929 Filed 6–5–00; 8:45 am]

BILLING CODE 4000–01–U

DEPARTMENT OF EDUCATION

Submission for OMB Review; Comment Request

AGENCY: Department of Education.

ACTION: Submission for OMB Review; Comment Request.

SUMMARY: The Leader, Information Management Group, Office of the Chief Information Officer invites comments on the submission for OMB review as required by the Paperwork Reduction Act of 1995.

DATES: Interested persons are invited to submit comments on or before July 6, 2000.

ADDRESSES: Written comments should be addressed to the Office of Information and Regulatory Affairs, Attention: Danny Werfel, Desk Officer, Department of Education, Office of Management and Budget, 725 17th Street, NW., Room 10235, New Executive Office Building, Washington, D.C. 20503 or should be electronically mailed to the internet address DWERFEL@OMB.EOP.GOV.

SUPPLEMENTARY INFORMATION: Section 3506 of the Paperwork Reduction Act of 1995 (44 U.S.C. Chapter 35) requires that the Office of Management and Budget (OMB) provide interested Federal agencies and the public an early opportunity to comment on information collection requests. OMB may amend or waive the requirement for public consultation to the extent that public participation in the approval process would defeat the purpose of the information collection, violate State or Federal law, or substantially interfere with any agency's ability to perform its statutory obligations. The Leader, Information Management Group, Office of the Chief Information Officer, publishes that notice containing proposed information collection requests prior to submission of these requests to OMB. Each proposed information collection, grouped by office, contains the following: (1) Type of review requested, e.g. new, revision, extension, existing or reinstatement; (2) Title; (3) Summary of the collection; (4) Description of the need for, and proposed use of, the information; (5) Respondents and frequency of collection; and (6) Reporting and/or Recordkeeping burden. OMB invites public comment.

Dated: May 31, 2000.

William Burrow,

Leader, Information Management Group, Office of the Chief Information Officer.

Office of Special Education and Rehabilitative Services

Type of Review: Revision.

Title: Report of Children with Disabilities Receiving Special Education under Part B of the Individuals with Disabilities Education Act.

Frequency: Annually.

Affected Public: State, Local, or Tribal Gov't, SEAs or LEAs.

Reporting and Recordkeeping Hour Burden: Responses: 58; Burden Hours: 30,682.

Abstract: This package provides instructions and a form necessary for States to report the number of children with disabilities served under IDEA–B that receive special education and related services. It serves as the basis for distributing federal assistance, monitoring, implementing, and Congressional reporting.

Requests for copies of the proposed information collection request may be accessed from *http://edicsweb.ed.gov*, or should be addressed to Vivian Reese, Department of Education, 400 Maryland Avenue, SW, Room 5624, Regional Office Building 3, Washington, D.C. 20202–4651. Requests may also be electronically mailed to the internet address OCIO__IMG__Issues@ed.gov or faxed to 202–708–9346. Please specify the complete title of the information collection when making your request. Comments regarding burden and/or the collection activity requirements should be directed to Sheila__Carey at (202) 708–6287 or via her internet address Sheila__Carey@ed.gov. Individuals who use a telecommunications device for the deaf (TDD) may call the Federal Information Relay Service (FIRS) at 1–800–877–8339.

[FR Doc. 00–14088 Filed 6–5–00; 8:45 am]

BILLING CODE 4000–01–U

DEPARTMENT OF EDUCATION

Submission for OMB Review; Comment Request

AGENCY: Department of Education.

ACTION: Submission for OMB Review, Comment Request.

SUMMARY: The Leader, Information Management Group, Office of the Chief Information Officer invites comments on the submission for OMB review as required by the Paperwork Reduction Act of 1995.

DATES: Interested persons are invited to submit comments on or before July 6, 2000.

ADDRESSES: Written comments should be addressed to the Office of Information and Regulatory Affairs, Attention: Danny Werfel, Desk Officer, Department of Education, Office of Management and Budget, 725 17th Street, N.W., Room 10235, New Executive Office Building, Washington, D.C. 20503 or should be electronically mailed to the internet address DWERFEL@OMB.EOP.GOV.

SUPPLEMENTARY INFORMATION: Section 3506 of the Paperwork Reduction Act of 1995 (44 U.S.C. Chapter 35) requires that the Office of Management and Budget (OMB) provide interested Federal agencies and the public an early opportunity to comment on information collection requests. OMB may amend or waive the requirement for public consultation to the extent that public participation in the approval process would defeat the purpose of the information collection, violate State or Federal law, or substantially interfere with any agency's ability to perform its statutory obligations. The Leader, Information Management Group, Office of the Chief Information Officer, publishes that notice containing proposed information collection requests prior to submission of these requests to OMB. Each proposed information collection, grouped by office, contains the following: (1) Type of review requested, e.g. new, revision, extension, existing or reinstatement; (2) Title; (3) Summary of the collection; (4) Description of the need for, and proposed use of, the information; (5)

Respondents and frequency of collection; and (6) Reporting and/or Recordkeeping burden. OMB invites public comment.

Dated: May 31, 2000.

William Burrow,

Leader, Information Management Group, Office of the Chief Information Officer.

Office of Special Education and Rehabilitative Services

Type of Review: Revision.

Title: Part B, Individuals with Disabilities Education Act Implementation of FAPE Requirements 2000–01 School Year.

Frequency: Annually.

Affected Public: State, Local, or Tribal Gov't, SEAs or LEAs.

Reporting and Recordkeeping Hour Burden: Responses: 58; Burden Hours: 272,890.

Abstract: This package provides instructions and a form necessary for States to report the number of children with disabilities served under IDEA–B that receive special education and related services. It serves as the basis for distributing federal assistance, monitoring, implementing, and Congressional reporting.

Requests for copies of the proposed information collection request may be accessed from *http://edicsweb.ed.gov*, or should be addressed to Vivian Reese, Department of Education, 400 Maryland Avenue, SW, Room 5624, Regional Office Building 3, Washington, D.C. 20202–4651. Requests may also be electronically mailed to the internet address OCIO__IMG__Issues@ed.gov or faxed to 202–708–9346. Please specify the complete title of the information collection when making your request. Comments regarding burden and/or the collection activity requirements should be directed to Sheila Carey at (202) 708–6287 or via her internet address Sheila__Carey@ed.gov. Individuals who use a telecommunications device for the deaf (TDD) may call the Federal Information Relay Service (FIRS) at 1–800–877–8339.

[FR Doc. 00–14089 Filed 6–5–00; 8:45 am]

BILLING CODE 4000–01–U

DEPARTMENT OF ENERGY

Federal Energy Regulatory Commission

[Docket No. ER98–2770–006 (Consolidated with Docket Nos. EC98–40–000 and ER98–2786–000)]

American Electric Power Service Corporation Central and South West Services, Inc.; Notice of Filing

May 24, 2000.

Take notice that on May 22, 2000, American Electric Power Service Corporation, on behalf of the operating companies of the American Electric Power System, and Central and South West Services, Inc., on behalf of the operating companies of Central and South West Corporation, submitted a compliance filing containing substitute versions of the System Integration Agreement, the System Transmission Integration Agreement, and the Transmission Reassignment Tariff accepted for filing by the Commission in Docket No. ER98–2770–000.

Any person desiring to be heard or to protest such filing should file a motion to intervene or protest with the Federal Energy Regulatory Commission, 888 First Street, N.E., Washington, D.C. 20426, in accordance with Rules 211 and 214 of the Commission's Rules of Practice and Procedure (18 CFR 385.211 and 385.214). All such motions and protests should be filed on or before June 12, 2000. Protests will be considered by the Commission to determine the appropriate action to be taken, but will not serve to make protestants parties to the proceedings. Any person wishing to become a party must file a motion to intervene. Copies of this filing are on file with the Commission and are available for public inspection. This filing may also be viewed on the Internet at http://www.ferc.fed.us/online/rims.htm (call 202–208–2222 for assistance).

Linwood A. Watson, Jr.,

Acting Secretary.

[FR Doc. 00–14125 Filed 6–5–00; 8:45 am]

BILLING CODE 6717–01–M

DEPARTMENT OF ENERGY

Federal Energy Regulatory Commission

[Docket No. EL00–78–000]

Baconton Power LLC; Notice of Filing

May 25, 2000.

Take notice that on May 17, 2000, Baconton Power LLC tendered for filing a request for waiver of the Commission's open access transmission tariff and OASIS requirements to the extent required in connection with Baconton Power LLC's ownership of interconnection facilities (generation step-up transformers and an undivided common interest in certain common bus facilities) located at the plan site where Baconton's four 50 MW summer nominal capacity generators are being constructed.

Any person desiring to be heard or to protest such filing should file a motion to intervene or protest with the Federal Energy Regulatory Commission, 888 First Street, NE, Washington, DC 20426, in accordance with Rules 211 and 214 of the Commission's Rules of Practice and Procedure (18 CFR 385.211 and 385.214). All such motions and protests should be filed on or before June 16, 2000. Protests will be considered by the Commission to determine the appropriate action to be taken, but will not serve to make protestants parties to the proceedings. Any person wishing to become a party must file a motion to intervene. Copies of this filing are on file with the Commission and are available for public inspection. This filing may also be viewed on the Internet at http://www.ferc.fed.us/online/rims.htm (call 202–208–2222 for assistance).

Linwood A. Watson, Jr.,

Acting Secretary.

[FR Doc. 00–14130 Filed 6–5–00; 8:45 am]

BILLING CODE 6717–01–M

DEPARTMENT OF ENERGY

Federal Energy Regulatory Commission

[Docket No. ER00–2563–000]

Cabrillo Power II LLC; Notice of Filing

May 25, 2000.

Take notice that on May 19, 2000, Cabrillo Power II LLC (Cabrillo II), tendered for filing a corrected tariff sheet to its annual update filing (filed with the Commission on January 21, 2000) governing Reliability Must Run (RMR) services provided by its power plants to the California Independent System Operator Corporation (ISO). Cabrillo II's filing includes corrections to certain typographical errors on the Schedule appended to the RMR Agreement related to Prepaid Start-ups under the RMR Service Agreement.

Cabrillo II has requested an effective date of January 1, 2000.

Copies of this filing have been served upon the ISO, the California Electricity

Oversight Board, and the California Public Utilities Commission.

Any person desiring to be heard or to protest such filing should file a motion to intervene or protest with the Federal Energy Regulatory Commission, 888 First Street, NE, Washington, DC 20426, in accordance with Rules 211 and 214 of the Commission's Rules of Practice and Procedure (18 CFR 385.211 and 385.214). All such motions and protests should be filed on or before June 9, 2000. Protests will be considered by the Commission to determine the appropriate action to be taken, but will not serve to make protestants parties to the proceedings. Any person wishing to become a party must file a motion to intervene. Copies of this filing are on file with the Commission and are available for public inspection. This filing may also be viewed on the Internet at http://www.ferc.fed.us/online/rims.htm (call 202–208–2222 for assistance).

Linwood A. Watson, Jr.,

Acting Secretary.

[FR Doc. 00–14142 Filed 6–5–00; 8:45 am]

BILLING CODE 6717–01–M

DEPARTMENT OF ENERGY

Federal Energy Regulatory Commission

[Docket No. ER99–1971–007]

California Independent System Operator Corporation; Notice of Filing

May 24, 2000.

Take notice that on May 19, 2000, the California Independent System Operator Corporation (ISO) tendered for filing a Notice of Implementation, dated May 17, 2000, which specifies that, effective June 1, 2000, the ISO will implement electronic dispatch of resources through its Automated Dispatching System and will require that Scheduling Coordinators participating in the ISO's Real-Time Energy market be capable of receiving electronic dispatch instructions beginning on that date.

The ISO states that this filing has been served on all parties listed on the official service list in the above-referenced docket.

Any person desiring to be heard or to protest such filing should file a motion to intervene or protest with the Federal Energy Regulatory Commission, 888 First Street, N.E., Washington, D.C. 20426, in accordance with Rules 211 and 214 of the Commission's Rules of Practice and Procedure (18 CFR 385.211 and 385.214). All such motions and protests should be filed on or before June 9, 2000. Protests will be considered by the Commission to determine the appropriate action to be taken, but will not serve to make protestants parties to the proceedings. Any person wishing to become a party must file a motion to intervene. Copies of this filing are on file with the Commission and are available for public inspection. This filing may also be viewed on the Internet at http://www.ferc.fed.us/online/rims.htm (call 202–208–2222 for assistance).

Linwood A. Watson, Jr.,

Acting Secretary.

[FR Doc. 00–14124 Filed 6–5–00; 8:45 am]

BILLING CODE 6717–01–M

DEPARTMENT OF ENERGY

Federal Energy Regulatory Commission

[Docket No. ER00–2564–000]

Commonwealth Edison Company; Notice of Filing

May 25, 2000.

Take notice that on May 22, 2000, Commonwealth Edison Company (ComEd) tendered for filing a Short-Term Firm Transmission Service Agreement (Agreement) establishing Northern Indiana Public Service Company (NIPS), as a short-term firm customer under the terms of ComEd's OATT.

ComEd requests an effective date of June 22, 1999 to coincide with the first day of service to NIPS under this type of Service Agreement.

Copies of this filing were served on NIPS.

Any person desiring to be heard or to protest such filing should file a motion to intervene or protest with the Federal Energy Regulatory Commission, 888 First Street, NE, Washington, DC 20426, in accordance with Rules 211 and 214 of the Commission's Rules of Practice and Procedure (18 CFR 385.211 and 385.214). All such motions and protests should be filed on or before June 12, 2000. Protests will be considered by the Commission to determine the appropriate action to be taken, but will not serve to make protestants parties to the proceedings. Any person wishing to become a party must file a motion to intervene. Copies of this filing are on file with the Commission and are available for public inspection. This filing may also be viewed on the Internet at http://www.ferc.fed.us/online/rims.htm (call 202–208–2222 for assistance).

Linwood A. Watson, Jr.,

Acting Secretary.

[FR Doc. 00–14143 Filed 6–5–00; 8:45 am]

BILLING CODE 6717–01–M

DEPARTMENT OF ENERGY

Federal Energy Regulatory Commission

[Docket No. ER00–2558–000]

Duke Energy Corporation; Notice of Filing

May 25, 2000.

Take notice that on May 22, 2000, Duke Energy Corporation (Duke), tendered for filing a Service Agreement with Public Service Company of Colorado for Transmission Service under Duke's Open Access Transmission Tariff.

Duke requests that the proposed Service Agreement be permitted to become effective on May 12, 2000.

Duke states that this filing is in accordance with Part 35 of the Commission's Regulations and a copy has been served on the North Carolina Utilities Commission.

Any person desiring to be heard or to protest such filing should file a motion to intervene or protest with the Federal Energy Regulatory Commission, 888 First Street, NE, Washington, DC 20426, in accordance with Rules 211 and 214 of the Commission's Rules of Practice and Procedure (18 CFR 385.211 and 385.214). All such motions and protests should be filed on or before June 12, 2000. Protests will be considered by the Commission to determine the appropriate action to be taken, but will not serve to make protestants parties to the proceedings. Any person wishing to become a party must file a motion to intervene. Copies of this filing are on file with the Commission and are available for public inspection. This filing may also be viewed on the Internet at http://www.ferc.fed.us/online/rims.htm (call 202–208–2222 for assistance).

Linwood A. Watson, Jr.,

Acting Secretary.

[FR Doc. 00–14137 Filed 6–5–00; 8:45 am]

BILLING CODE 6717–01–M

DEPARTMENT OF ENERGY

Federal Energy Regulatory Commission

[Docket No. ER00–2559–000]

Duke Energy Corporation; Notice of Filing

May 25, 2000.

Take notice that on May 22, 2000, Duke Energy Corporation (Duke), tendered for filing a Service Agreement with Public Service Company of Colorado for Non-Transmission Service under Duke's Open Access Transmission Tariff.

Duke requests that the proposed Service Agreement be permitted to become effective on May 12, 2000.

Duke states that this filing is in accordance with Part 35 of the Commission's Regulations and a copy has been served on the North Carolina Utilities Commission.

Any person desiring to be heard or to protest such filing should file a motion to intervene or protest with the Federal Energy Regulatory Commission, 888 First Street, NE, Washington, DC 20426, in accordance with Rules 211 and 214 of the Commission's Rules of Practice and Procedure (18 CFR 385.211 and 385.214). All such motions and protests should be filed on or before June 12, 2000. Protests will be considered by the Commission to determine the appropriate action to be taken, but will not serve to make protestants parties to the proceedings. Any person wishing to become a party must file a motion to intervene. Copies of this filing are on file with the Commission and are available for public inspection. This filing may also be viewed on the Internet at http://www.ferc.fed.us/online/rims.htm (call 202–208–2222 for assistance).

Linwood A. Watson, Jr.,

Acting Secretary.

[FR Doc. 00–14138 Filed 6–5–00; 8:45 am]

BILLING CODE 6717–01–M

DEPARTMENT OF ENERGY

Federal Energy Regulatory Commission

[Docket No. ER00–95–000]

Dynegy Inc., Illinova Corporation, Dynegy Holdings Inc., and Dynegy Midwest Generation, Inc.; Notice of Filing

May 25, 2000.

Take notice that on May 22, 2000, Dynegy Inc. (Dynegy), Illinova Corporation (Illinova), Dynegy Holdings Inc. (DHI), and Dynegy Midwest Generation, Inc. (DMGI) (together, Applicants) tendered for filing an application under section 203 of the Federal Power Act requesting that the Commission approve a series of transactions (Proposed Transfer) designed to transfer the equity ownership of DMGI from Illinova to a to-be-formed, wholly-owned subsidiary of DHI. The Proposed Transfer is intended to effectuate a corporate reorganization.

Any person desiring to be heard or to protest such filing should file a motion to intervene or protest with the Federal Energy Regulatory Commission, 888 First Street, NE, Washington, DC 20426, in accordance with Rules 211 and 214 of the Commission's Rules of Practice and Procedure (18 CFR 385.211 and 385.214). All such motions and protests should be filed on or before June 12, 2000. Protests will be considered by the Commission to determine the appropriate action to be taken, but will not serve to make protestants parties to the proceedings. Any person wishing to become a party must file a motion to intervene. Copies of this filing are on file with the Commission and are available for public inspection. This filing may also be viewed on the Internet at http://www.ferc.fed.us/online/rims.htm (call 202–208–2222 for assistance).

Linwood A. Watson, Jr.,

Acting Secretary.

[FR Doc. 00–14131 Filed 6–5–00; 8:45 am]

BILLING CODE 6717–01–M

DEPARTMENT OF ENERGY

Federal Energy Regulatory Commission

[Docket No. RP00–245–001]

East Tennessee Natural Gas Company; Notice of Compliance Filing

May 31, 2000.

Take notice that on May 25, 2000, East Tennessee Natural Gas Company (East Tennessee) tendered for filing as part of its FERC Gas Tariff, Second Revised Volume No. 1, the following tariff sheet to be effective May 1, 2000:

Seventh Revised Sheet No. 176

East Tennessee asserts that this filing is in compliance with the Commission's May 12, 2000 Letter Order in the above-referenced docket, which required East Tennessee to file revised tariff language to update certain EDI data sets incorporated by reference to GISB Version 1.3.

East Tennessee states that copies of its filing have been mailed to all affected customers and interested state commissions.

Any person desiring to protest this filing should file a protest with the Federal Energy Regulatory Commission, 888 First Street, NE., Washington, DC 20426, in accordance with section 385.211 of the Commission's Rules and Regulations. All such protests must be filed as provided in section 154.210 of the Commission's Regulations. Protests will be considered by the Commission in determining the appropriate action to be taken, but will not serve to make protestants parties to the proceedings. Copies of this filing are on file with the Commission and are available for public inspection in the Public Reference Room. This filing may be viewed on the web at http://www.ferc.fed.us/online/rims.htm (call 202–208–2222 for assistance).

Linwood A. Watson, Jr.,

Acting Secretary.

[FR Doc. 00–14077 Filed 6–5–00; 8:45 am]

BILLING CODE 6717–01–M

DEPARTMENT OF ENERGY

Federal Energy Regulatory Commission

[Docket No. ES00–36–001]

Electric Energy, Inc.; Notice of Filing

May 24, 2000.

Take notice that on May 18, 2000, Electric Energy, Inc. (EEInc.) filed an amendment to its application seeking authorization to issue from time to time during the period from June 1, 2000 through May 31, 2002 (a) up to $120 million of new long-term debt with a maturity of up to 15 years, and (b) new short-term debt with the aggregate amount outstanding at any time not to exceed $70 million. EEInc. requests that such authorization be granted instead for a period from June 15, 2000, through June 14, 2002. In addition, EEInc. modified its application to reflect the possibility that the final terms of issuance may be somewhat different from those described in the application. EEInc. requests that a revised page 5 be substituted for that previously submitted with the original application to this proceeding.

Any person desiring to be heard or to protest such filing should file a motion to intervene or protest with the Federal Energy Regulatory Commission, 888 First Street, N.E., Washington, DC 20426, in accordance with Rules 211 and 214 of the Commission's Rules of

Practices and Procedure (18 CFR 385.211 and 385.214). All such motions and protests should be filed on or before June 7, 2000. Protests will be considered by the Commission to determine the appropriate action to be taken, but will not serve to make protestants parties to the proceedings. Any person wishing to become a party must file a motion to intervene. Copies of this filing are on file with the Commission and are available for public inspection. This filing may also be viewed on the Internet at http://www.ferc.fed.us/online/rims.htm (call 202–208–2222 for assistance).

Linwood A. Watson, Jr.,

Acting Secretary.

[FR Doc. 00–14123 Filed 6–5–00; 8:45 am]

BILLING CODE 6717–01–M

DEPARTMENT OF ENERGY

Federal Energy Regulatory Commission

[Docket No. RP00–272–001]

Garden Banks Gas Pipeline, LLC; Notice of Proposed Changes in FERC Gas Tariff

May 31, 2000.

Take notice that on May 25, 2000, Garden Banks Gas Pipeline, LLC (GBGP) tendered for filing as part of its FERC Gas Tariff, Original Volume No. 1, the following revised tariff sheets to be effective May 1, 2000:

Substitute Second Revised Sheet No. 293
Substitute Second Revised Sheet No. 294

On May 5, 2000, GBGP filed tariff sheets in Docket No. RP00–272–000 (May 5th filing) to revise its Form of Interactive Internet Website Agreement because of a change of vendors for its interactive Internet website computer applications. GBGP used language similar to the language filed by Mississippi Canyon Gas Pipeline, LLC (MCGP) and Nautilus Pipeline Company, L.L.C (Nautilus) in Docket Nos. RP00–271–000 and RP00–270–000, respectively. A shipper objected to certain revised language in both of those proceedings. MCGP and Nautilus are filing contemporaneously herewith, to replace the objectionable language with language currently in effect. Although no party objected to GBBP's proposed language, GBGP is willing to restore the currently effective tariff language in order to remain consistent with the Nautilus and MCGP tariffs and alleviate any similar concerns. In addition, GBGP is correcting an incorrect reference to Interactive Internet Website that was included in the original filing. GBGP requests waiver of the 30-day notice requirement in section 154.207 so that the tariff sheets contained herein can become effective on the same date as the tariff sheets filed in the original May 5th filing.

Any person desiring to protest this filing should file a protest with the Federal Energy Regulatory Commission, 888 First Street, NE., Washington, DC 20426, in accordance with section 385.211 of the Commission's Rules and Regulations. All such protests must be filed as provided in section 154.210 of the Commission's Regulations. Protests will be considered by the Commission in determining the appropriate action to be taken, but will not serve to make protestants parties to the proceedings. Copies of this filing are on file with the Commission and are available for public inspection in the Public Reference Room. This filing may be viewed on the web at http://www.ferc.fed.us/online/rims.htm (call 202–208–2222 for assistance).

Linwood A. Watson, Jr.,

Acting Secretary.

[FR Doc. 00–14080 Filed 6–5–00; 8:45 am]

BILLING CODE 6717–01–M

DEPARTMENT OF ENERGY

Federal Energy Regulatory Commission

[Docket No. ER00–2553–000]

Kansas City Power & Light Company; Notice of Filing

May 25, 2000.

Take notice that on May 22, 2000, Kansas City Power & Light Company (KCPL), tendered for filing Service Agreements dated May 1, 2000, between KCPL and Corel Energy. This Agreement provides for the rates and charges for Non-Firm and Short-term Firm Transmission Service.

KCPL proposes an effective date of May 3, 2000 and requests a waiver of the Commission's notice requirement to allow the requested effective date.

In its filing, KCPL states that the rates included in the above-mentioned Service Agreement are KCPL's rates and charges in the compliance filing to FERC Order 888–A in Docket No. OA97–636–000.

Any person desiring to be heard or to protest such filing should file a motion to intervene or protest with the Federal Energy Regulatory Commission, 888 First Street, NE, Washington, DC 20426, in accordance with Rules 211 and 214 of the Commission's Rules of Practice and Procedure (18 CFR 385.211 and 385.214). All such motions and protests should be filed on or before June 12, 2000. Protests will be considered by the Commission to determine the appropriate action to be taken, but will not serve to make protestants parties to the proceedings. Any person wishing to become a party must file a motion to intervene. Copies of this filing are on file with the Commission and are available for public inspection. This filing may also be viewed on the Internet at http://www.ferc.fed.us/online/rims.htm (call 202–208–2222 for assistance).

Linwood A. Watson, Jr.,

Acting Secretary.

[FR Doc. 00–14132 Filed 6–5–00; 8:45 am]

BILLING CODE 6717–01–M

DEPARTMENT OF ENERGY

Federal Energy Regulatory Commission

[Docket No. ER00–2554–000]

Kansas City Power & Light Company; Notice of Filing

May 25, 2000.

Take notice that on May 22, 2000, Kansas City Power & Light Company (KCPL), tendered for filing Service Agreements dated May 1, 2000, between KCPL and New Energy, Inc.

KCPL proposes an effective date of May 3, 2000 and requests a waiver of the Commission's notice requirement to allow the requested effective date. This Agreement provides for the rates and charges for Non-Firm and Short-term Firm Transmission Service.

In its filing, KCPL states that the rates included in the above-mentioned Service Agreement are KCPL's rates and charges in the compliance filing to FERC Order 888–A in Docket No. OA97–636–000.

Any person desiring to be heard or to protest such filing should file a motion to intervene or protest with the Federal Energy Regulatory Commission, 888 First Street, NE, Washington, DC 20426, in accordance with Rules 211 and 214 of the Commission's Rules of Practice and Procedure (18 CFR 385.211 and 385.214). All such motions and protests should be filed on or before June 12, 2000. Protests will be considered by the Commission to determine the appropriate action to be taken, but will not serve to make protestants parties to the proceedings. Any person wishing to become a party must file a motion to intervene. Copies of this filing are on file with the Commission and are available for public inspection. This

filing may also be viewed on the Internet at http://www.ferc.fed.us/online/rims.htm (call 202–208–2222 for assistance).

Linwood A. Watson, Jr.,

Acting Secretary.

[FR Doc. 00–14133 Filed 6–5–00; 8:45 am]

BILLING CODE 6717–01–M

DEPARTMENT OF ENERGY

Federal Energy Regulatory Commission

[Docket No. ER00–2555–000]

Kansas City Power & Light Company; Notice of Filing

May 25, 2000.

Take notice that on May 22, 2000, Kansas City Power & Light Company (KCPL), tendered for filing Service Agreements dated May 2, 2000, between KCPL and British Columbia Power Exchange Corporation (Powerex).

KCPL proposes an effective date of May 3, 2000 and requests a waiver of the Commission's notice requirement to allow the requested effective date. This Agreements provide for the rates and charges for Non-Firm and Short-term Firm Transmission Service.

In its filing, KCPL states that the rates included in the above-mentioned Service Agreement are KCPL's rates and charges in the compliance filing to FERC Order 888–A in Docket No. OA97–636–000.

Any person desiring to be heard or to protest such filing should file a motion to intervene or protest with the Federal Energy Regulatory Commission, 888 First Street, NE, Washington, DC 20426, in accordance with Rules 211 and 214 of the Commission's Rules of Practice and Procedure (18 CFR 385.211 and 385.214). All such motions and protests should be filed on or before June 12, 2000. Protests will be considered by the Commission to determine the appropriate action to be taken, but will not serve to make protestants parties to the proceedings. Any person wishing to become a party must file a motion to intervene. Copies of this filing are on file with the Commission and are available for public inspection. This filing may also be viewed on the Internet at http://www.ferc.fed.us/online/rims.htm (call 202–208–2222 for assistance).

Linwood A. Watson, Jr.,

Acting Secretary.

[FR Doc. 00–14134 Filed 6–5–00; 8:45 am]

BILLING CODE 6717–01–M

DEPARTMENT OF ENERGY

Federal Energy Regulatory Commission

[Docket No. ER00–2556–000]

Kansas City Power & Light Company; Notice of Filing

May 25, 2000.

Take notice that on May 22, 2000, Kansas City Power & Light Company (KCPL), tendered for filing Service Agreements dated May 9, 2000, between KCPL and Conectiv Energy Supply, Inc. (Powerex).

KCPL proposes an effective date of May 10, 2000, and requests a waiver of the Commission's notice requirement to allow the requested effective date. This Agreements provide for the rates and charges for Non-Firm and Short-term Firm Transmission Service.

In its filing, KCPL states that the rates included in the above-mentioned Service Agreement are KCPL's rates and charges in the compliance filing to FERC Order 888–A in Docket No. OA97–636–000.

Any person desiring to be heard or to protest such filing should file a motion to intervene or protest with the Federal Energy Regulatory Commission, 888 First Street, NE, Washington, DC 20426, in accordance with Rules 211 and 214 of the Commission's Rules of Practice and Procedure (18 CFR 385.211 and 385.214). All such motions and protests should be filed on or before June 12, 2000. Protests will be considered by the Commission to determine the appropriate action to be taken, but will not serve to make protestants parties to the proceedings. Any person wishing to become a party must file a motion to intervene. Copies of this filing are on file with the Commission and are available for public inspection. This filing may also be viewed on the Internet at http://www.ferc.fed.us/online/rims.htm (call 202–208–2222 for assistance).

Linwood A. Watson, Jr.,

Acting Secretary.

[FR Doc. 00–14135 Filed 6–5–00; 8:45 am]

BILLING CODE 6717–01–M

DEPARTMENT OF ENERGY

Federal Energy Regulatory Commission

[Docket No. ER00–2557–000]

Kansas City Power & Light Company; Notice of Filing

May 25, 2000.

Take notice that on May 22, 2000, Kansas City Power & Light Company (KCPL), tendered for filing a Service Agreement dated May 9, 2000, between KCPL and Morgan Stanley Capital Group, Inc.

KCPL proposes an effective date of May 12, 2000 and requests waiver of the Commission's notice requirement. This Agreement provides for the rates and charges for Non-Firm Transmission Service.

In its filing, KCPL states that the rates included in the above-mentioned Service Agreement are KCPL's rates and charges in the compliance filing to FERC Order 888–A in Docket No. OA97–636.

Any person desiring to be heard or to protest such filing should file a motion to intervene or protest with the Federal Energy Regulatory Commission, 888 First Street, NE, Washington, DC 20426, in accordance with Rules 211 and 214 of the Commission's Rules of Practice and Procedure (18 CFR 385.211 and 385.214). All such motions and protests should be filed on or before June 12, 2000. Protests will be considered by the Commission to determine the appropriate action to be taken, but will not serve to make protestants parties to the proceedings. Any person wishing to become a party must file a motion to intervene. Copies of this filing are on file with the Commission and are available for public inspection. This filing may also be viewed on the Internet at http://www.ferc.fed.us/online/rims.htm (call 202–208–2222 for assistance).

Linwood A. Watson, Jr.,

Acting Secretary.

[FR Doc. 00–14136 Filed 6–5–00; 8:45 am]

BILLING CODE 6717–01–M

DEPARTMENT OF ENERGY

Federal Energy Regulatory Commission

[Docket No. ER00–2560–000]

Louisville Gas and Electric Company/ Kentucky Utilities Company; Notice of Filing

May 25, 2000.

Take notice that on May 22, 2000, Louisville Gas and Electric Company (LG&E)/Kentucky Utilities (KU) (hereinafter Companies), tendered for filing unexecuted unilateral Service Sales Agreement between Companies and Trans/Alta Energy Marketing (US) Inc., under the Companies' Rate Schedule MBSS.

Any person desiring to be heard or to protest such filing should file a motion to intervene or protest with the Federal Energy Regulatory Commission, 888 First Street, NE, Washington, DC 20426, in accordance with Rules 211 and 214 of the Commission's Rules of Practice and Procedure (18 CFR 385.211 and 385.214). All such motions and protests should be filed on or before June 12, 2000. Protests will be considered by the Commission to determine the appropriate action to be taken, but will not serve to make protestants parties to the proceedings. Any person wishing to become a party must file a motion to intervene. Copies of this filing are on file with the Commission and are available for public inspection. This filing may also be viewed on the Internet at http://www.ferc.fed.us/online/rims.htm (call 202–208–2222 for assistance).

Linwood A. Watson, Jr.,

Acting Secretary.

[FR Doc. 00–14139 Filed 6–5–00; 8:45 am]

BILLING CODE 6717–01–M

DEPARTMENT OF ENERGY

Federal Energy Regulatory Commission

[Docket No. ER00–2561–000]

Louisville Gas and Electric Company/ Kentucky Utilities Company; Notice of Filing

May 25, 2000.

Take notice that on May 22, 2000, Louisville Gas and Electric Company (LG&E)/Kentucky Utilities (KU) (hereinafter Companies), tendered for filing executed unilateral transmission service agreement with Amerada Hess Corporation. The agreement allows Amerada Hess to take non-firm point-to-point transmission service from LG&E/KU.

Any person desiring to be heard or to protest such filing should file a motion to intervene or protest with the Federal Energy Regulatory Commission, 88 First Street, NE, Washington, DC 20426, in accordance with Rules 211 and 214 of the Commission's Rules of Practice and Procedure (18 CFR 385.211 and 385.214). All such motions and protests should be filed on or before June 12, 2000. Protests will be considered by the Commission to determine the appropriate action to be taken, but will not serve to make protestants parties to the proceedings. Any person wishing to become a party must file a motion to intervene. Copies of this filing are on file with the Commission and are available for public inspection. This filing may also be viewed on the Internet at http://www.ferc.fed.us/online/rims.htm (call 202–208–2222 for assistance).

Linwood A. Watson, Jr.,

Acting Secretary.

[FR Doc. 00–14140 Filed 6–5–00; 8:45 am]

BILLING CODE 6717–01–M

DEPARTMENT OF ENERGY

Federal Energy Regulation Commission

[Docket No. ER00–2470–000]

Mid-Continent Area Power Pool; Notice of Filing

June 1, 2000.

Take notice that on May 8, 2000, Mid-Continent Area Power Pool, tendered for filing notice of withdrawal of its proposed regional transmission tariff filed with the Commission.

Any person desiring to be heard or to protest such filing should file a motion to intervene or protest with the Federal Energy Regulatory Commission, 888 First Street, N.E., Washington, D.C. 20426, in accordance with Rules 211 and 214 of the Commission's Rules of Practice and Procedure (18 CFR 385.211 and 385.214). All such motions or protests should be filed on or before June 12, 2000. Protests will be considered by the Commission to determine the appropriate action to be taken, but will not serve to make protestants parties to the proceedings. Any person wishing to become a party must file a motion to intervene. Copies of this filing are on file with the Commission and are available for public inspection. This filing may also be viewed on the Internet at http://www.ferc.fed.us/online/rims.htm call 202–208–222 for assistance).

Linwood A. Watson, Jr.,

Acting Secretary.

[FR Doc. 00–14120 Filed 6–5–00; 8:45 am]

BILLING CODE 6717–01–M

DEPARTMENT OF ENERGY

Federal Energy Regulatory Commission

[Docket No. EC00–94–000]

Midwest Generation, LLC; Notice of Filing

May 24, 2000.

Take notice that on May 19, 2000, Midwest Generation, LLC tendered for filing an application under section 203 of the Federal Power Act for approval of the transfer of transformers and interconnection facilities associated with a 1,538 MW coal-fired electric generating plant and two units of a 1,358 MW coal-fired electric generating plant being financed pursuant to a sale/leaseback arrangement.

Any person desiring to be heard or to protest such filing should file a motion to intervene or protest with the Federal Energy Regulatory Commission, 888 First Street, N.E., Washington, D.C. 20426, in accordance with Rules 211 and 214 of the Commission's Rules of Practice and Procedure (18 CFR 385.211 and 385.214). All such motions and protests should be filed on or before June 19, 2000. Protests will be considered by the Commission to determine the appropriate action to be taken, but will not serve to make protestants parties to the proceedings. Any person wishing to become a party must file a motion to intervene. Copies of this filing are on file with the Commission and are available for public inspection. This filing may also be viewed on the Internet at http://www.ferc.fed.us/online/rims.htm (call 202–208–2222 for assistance).

Linwood A. Watson, Jr.,

Acting Secretary.

[FR Doc. 00–14126 Filed 6–5–00; 8:45 am]

BILLING CODE 6717–01–M

DEPARTMENT OF ENERGY

Federal Energy Regulatory Commission

[Docket No. RP00–271–001]

Mississippi Canyon Gas Pipeline, L.L.C.; Notice of Proposed Changes in FERC Gas Tariff

May 31, 2000.

Take notice that on May 25, 2000, Mississippi Canyon Gas Pipeline, LLC (MCGP) tendered for filing as part of its FERC Gas Tariff, Original Volume No. 1, the following revised tariff sheets to be effective June 1, 2000:

Substitute First Revised Sheet No. 309
Substitute First Revised Sheet No. 310

On May 25, 2000, MCGP filed tariff sheets in Docket No. RP00–271–000 (May 5th filing) to revise its Form of Interactive Internet Website Agreement because of a change of vendors for its interactive Internet website computer applications. On May 19, 2000, a shipper filed a motion to intervene out-of-time and protest objecting to certain language revisions included in that filing. MCGP is making the instant filing to alleviate the shipper's concerns by removing and replacing the tariff references the shipper objected to with the existing tariff language at the time of the May 5th filing. In addition, MCGP is correcting an incorrect reference to Interactive Internet Website that was included in the May 5th filing. MCGP requests waiver of the 30-day notice requirement in section 154.207 so that the tariff sheets contained herein can become effective on the same date as the tariff sheets filed in the original May 5th filing.

Any person desiring to protest such filing should file a protest with the Federal Energy Regulatory Commission, 888 First Street, NE., Washington, DC 20426, in accordance with section 385.211 of the Commission's Rules and Regulations. All such protests must be filed as provided in section 154.210 of the Commission's Regulations. Protests will be considered by the Commission in determining the appropriate action to be taken, but will not serve to make protestants parties to the proceedings. Copies of this filing are on file with the Commission and are available for public inspection in the Public Reference Room. This filing may also be viewed on the web at http://www.ferc.fed.us/online/rims.htm (call 202–208–2222 for assistance).

Linwood A. Watson, Jr.,
Acting Secretary.
[FR Doc. 00–14079 Filed 6–5–00; 8:45 am]
BILLING CODE 6717–01–M

DEPARTMENT OF ENERGY

Federal Energy Regulatory Commission

[Docket No. RP00–270–001]

Nautilus Pipeline Company, L.L.C.; Notice of Proposed Changes in FERC Gas Tariff

May 31, 2000.

Take notice that on May 25, 2000, Nautilus Pipeline Company, L.L.C. (Nautilus) tendered for filing as part of its FERC Gas Tariff, Original Volume No. 1, the following revised tariff sheets to be effective June 1, 2000:

Substitute Second Revised Sheet No. 322
Substitute Second Revised Sheet No. 323
Substitute Second Revised Sheet No. 324

On May 25, 2000, Nautilus filed tariff sheets in Docket No. RP00–271–000 (May 5th filing) to revise its Form of Interactive Internet Website Agreement because of a change of vendors for its interactive Internet website computer applications. On May 22, 2000, a shipper filed a motion to intervene out-of-time and protest objecting to certain language revisions included in that filing. Nautilus is making the instant filing to alleviate the shipper's concerns by removing and replacing the tariff references the shipper objected to with the existing tariff language at the time of the May 5th filing. In addition, Nautilus is correcting an incorrect reference to Interactive Internet Website that was included in the May 5th filing.

Nautilus requests waiver of the 30-day notice requirement in section 154.207 so that the tariff sheets contained herein can become effective on the same date as the tariff sheets filed in the original May 5th filing.

Any person desiring to protest this filing should file a protest with the Federal Energy Regulatory Commission, 888 First Street, NE., Washington, DC 20426, in accordance with section 385.211 of the Commission's Rules and Regulations. All such protests must be filed as provided in section 154.210 of the Commission's Regulations. Protests will be considered by the Commission in determining the appropriate action to be taken, but will not serve to make protestants parties to the proceedings. Copies of this filing are on file with the Commission and are available for public inspection in the Public Reference Room. This filing may also be viewed on the web at http://www.ferc.fed.us/online/rims.htm (call 202–208–2222 for assistance).

Linwood A. Watson, Jr.,
Acting Secretary.
[FR Doc. 00–14078 Filed 6–5–00; 8:45 am]
BILLING CODE 6717–01–M

DEPARTMENT OF ENERGY

Federal Energy Regulatory Commission

[Docket No. ER00–2566–000]

New England Power Company, Massachusetts Electric Company, and The Narragansett Electric Company; Notice of Filing

May 25, 2000.

Take notice that on May 19, 2000, New England Power Company (NEP), Massachusetts Electric Company (MECO) and The Narragansett Electric Company (Narragansett) tendered for filing: (i) an amended and restated open access transmission tariff—New England Power Company, FERC Electric Tariff, Original Volume No. 9 (Tariff No. 9); (ii) amendments to NEP's Tariff No. 9 Network Integration Transmission Service Agreements with MECO, Narragansett and the Massachusetts Bay Transportation Authority; (iii) notices of succession for certain rate schedules under which the operating companies of Eastern Utilities Associates formerly provided service; and (iv) notices of cancellation for certain rate schedules.

These filings were made in connection with the consummation of the merger of National Grid USA (formerly known as New England Electric System) with Eastern Utilities Associates, and the subsequent consummation of the mergers and consolidations of the respective operating companies of the two systems.

Any person desiring to be heard or to protest such filing should file a motion to intervene or protest with the Federal Energy Regulatory Commission, 888 First Street, NE, Washington, DC 20426, in accordance with Rules 211 and 214 of the Commission's Rules of Practice and Procedure (18 CFR 385.211 and 385.214). All such motions and protests should be filed on or before June 9, 2000. Protests will be considered by the Commission to determine the appropriate action to be taken, but will not serve to make protestants parties to the proceedings. Any person wishing to become a party must file a motion to intervene. Copies of this filing are on

file with the Commission and are available for public inspection. This filing may also be viewed on the Internet at http://www.ferc.fed.us/online/rims.htm (call 202–208–2222 for assistance).

Linwood A. Watson, Jr.,

Acting Secretary.

[FR Doc. 00–14145 Filed 6–5–00; 8:45 am]

BILLING CODE 6717–01–M

DEPARTMENT OF ENERGY

Federal Energy Regulatory Commission

[Docket No. ER00–2624–000]

New York Independent System Operator, Inc.; Notice of Filing

June 1, 2000.

Take notice that on May 26, 2000, New York Independent System Operator, Inc., (NYISO), tendered for filing a request for an extension of Temporary Extraordinary Procedures for Correcting Market Design Flaws and Addressing Transitional Abnormalities.

The NYISO requests an effective date of May 17, 2000 and waiver of the Commission's notice requirements.

A copy of this filing was served upon all persons on the Commission's official service list in Docket No. ER00–1533–000, on those parties who have executed service agreements under the NYISO Open Access Transmission Tariff or under the New York Independent System Operator Market Administration and Control Area Services Tariff and on the electric utility regulatory agencies in New York, New Jersey and Pennsylvania.

Any person desiring to be heard or to protest such filing should file a motion to intervene or protest with the Federal Energy Regulatory Commission, 888 First Street, N.E., Washington, D.C. 20426, in accordance with Rules 211 and 214 of the Commission's Rules of Practice and Procedure (18 CFR 385.211 and 385.214). All such motions and protests should be filed on or before June 16, 2000. Protests will be considered by the Commission to determine the appropriate action to be taken, but will not serve to make protestants parties to the proceedings. Any person wishing to become a party must file a motion to intervene. Copies of this filing are on file with the Commission and are available for public inspection. This filing may also be viewed on the Internet at http://www.ferc.fed.us/online/rims.htm (call 202–208–2222 for assistance).

Linwood A. Watson, Jr.,

Acting Secretary.

[FR Doc. 00–14122 Filed 6–5–00; 8:45 am]

BILLING CODE 6717–01–M

DEPARTMENT OF ENERGY

Federal Energy Regulatory Commission

[Docket No. OA97–25–007]

Northern States Power Company Minnesota and Wisconsin; Notice of Filing

May 24, 2000.

Take notice that on May 22, 2000, Northern States Power Company (Minnesota) and Northern States Power Company (Wisconsin) (jointly NSP) submitted a corrected transmission refund report. The original refund report was filed February 21, 2000, and was required by the Commission's December 20, 1999 letter order approving the Offer of Settlement filed on March 23, 1999, in the above captioned docket. See 89 FERC ¶ 61,200 (1999). The original refund report was accepted for filing by letter order dated April 10, 2000 in the above captioned docket.

NSP states that a copy of the Corrected Refund Report has been served on all parties on the official Commission service list for this proceeding, on all affected transmission service customers, and on affected state commissions.

Any person desiring to be heard or to protest such filing should file a motion to intervene or protest with the Federal Energy Regulatory Commission, 888 First Street, N.E., Washington, D.C. 20426, in accordance with Rules 211 and 214 of the Commission's Rules of Practice and Procedure (18 CFR 385.211 and 385.214). All such motions and protests should be filed on or before June 23, 2000. Protests will be considered by the Commission to determine the appropriate action to be taken, but will not serve to make protestants parties to the proceedings. Any person wishing to become a party must file a motion to intervene. Copies of this filing are on file with the Commission and are available for public inspection. This filing may also be viewed on the Internet at http://www.ferc.fed.us/on/rims.htm (call 202–208–2222 for assistance).

Linwood A. Watson, Jr.,

Acting Secretary.

[FR Doc. 00–14128 Filed 6–5–00; 8:45 am]

BILLING CODE 6717–01–M

DEPARTMENT OF ENERGY

Federal Energy Regulatory Commission

[Docket No. EC00–90–000]

P&L Coal Holdings Corporation, Edison Mission Energy, Citizens Power LLC; Notice of Filing

May 24, 2000.

Take notice that on May 22, 2000, P&L Coal Holdings Corporation (P&L), Edison Mission Energy (Mission), and Citizens Power LLC (collectively, Applicants) filed a supplement to their Application for Order Authorizing Sale of Equity Interests filed on May 12, 2000 in this docket. The supplement consists of the Purchase and Sale Agreement by and among Mission, P&L and Gold Fields Mining Corporation, to meet the Exhibit H requirements of Part 33 of the filing requirements. Applicants request privileged treatment for the Purchase and Sale Agreement, pursuant to 18 CFR 388.112 of the Commission's Regulations.

Any person desiring to be heard or to protest such filing should file a motion to intervene or protest with the Federal Energy Regulatory Commission, 888 First Street, N.E., Washington, D.C. 20426, in accordance with Rules 211 and 214 of the Commission's Rules of Practice and Procedure (18 CFR 385.211 and 385.214). All such motions and protests should be filed on or before June 12, 2000. Protests will be considered by the Commission to determine the appropriate action to be taken, but will not serve to make protestants parties to the proceedings. Any person wishing to become a party must file a motion to intervene. Copies of this filing are on file with the Commission and are available for public inspection. This filing may also be viewed on the Internet at http://www.ferc.fed.us/online/rims.htm (call 202–208–2222 for assistance).

Linwood A. Watson, Jr.,

Acting Secretary.

[FR Doc. 00–14127 Filed 6–5–00; 8:45 am]

BILLING CODE 6717–01–M

DEPARTMENT OF ENERGY

Federal Energy Regulatory Commission

[Docket Nos. ER00–936–001 and ER00–937–001]

Southern Energy Delta, L.L.C. and Southern Energy Potrero, L.L.C.; Notice of Convening Session

June 1, 2000.

On May 22, 2000, the Commission issued an Order on Rehearing in *Southern Energy Delta, L.L.C. and Southern Energy Potrero, L.L.C.,* 91 FERC ¶ 61,117 (2000). In that order, the Commission granted rehearing, in part, and set the remainder of the dispute for an alternative dispute resolution proceeding. The Commission directed the Director of the Commission's Dispute Resolution Service to convene the parties for the purpose of an alternative dispute resolution proceeding. Accordingly, a convening session will be held to address what processes can be taken to reach a consensual agreement, including whether to use an alternative dispute resolution process and/or an appropriate third party neutral.

The convening session will be held on June 8, 2000, at the Federal Energy Regulatory Commission located at 888 First Street, N.E., Washington, D.C. The conference will begin at 10:00 a.m. in Hearing Room 7. Moreover, at the request of the parties, the remainder of June 8 as well as June 9 will be available to allow the parties to proceed with settlement discussion if such action is appropriate.

All interested parties are invited to attend the convening session. If a party has any questions with respect to the convening session, please contact Richard Miles, the Director of the Dispute Resolution Service or Amy Blauman. His telephone number is 1–877 FERC ADR (337–2237) or 202–208–0702 and his e-mail address is *richard.miles@ferc.fed.us.* Amy's phone number is 202–208–2143 and her E-mail address is *amy.blauman@ferc.fed.us.*

Linwood A. Watson, Jr.,

Acting Secretary.

[FR Doc. 00–14121 Filed 6–5–00; 8:45 am]

BILLING CODE 6717–01–M

DEPARTMENT OF ENERGY

Federal Energy Regulatory Commission

[Docket No. ER00–2565–000]

Southwestern Public Service Company; Notice of Filing

May 25, 2000.

Take notice that on May 22, 2000, New Century Services, Inc. (NCS), on behalf of Southwestern Public Service Company (SPS), tendered for filing an unexecuted Service Agreement for Network Integration Transmission Service and an unexecuted Network Operating Agreement between Golden Spread Electric Cooperative, Inc. (Golden Spread) and SPS under the open-access transmission tariff filed by NCS, on behalf of the Utility Operating Company Subsidiaries of New Century Energies, Inc.

NCS requests waiver of the Commission's 60-day notice requirements so that the enclosed agreement can become effective on April 20, 2000.

Any person desiring to be heard or to protest such filing should file a motion to intervene or protest with the Federal Energy Regulatory Commission, 888 First Street, NE, Washington, DC 20426, in accordance with Rules 211 and 214 of the Commission's Rules of Practice and Procedure (18 CFR 385.211 and 385.214). All such motions and protests should be filed on or before June 12, 2000. Protests will be considered by the Commission to determine the appropriate action to be taken, but will not serve to make protestants parties to the proceedings. Any person wishing to become a party must file a motion to intervene. Copies of this filing are on file with the Commission and are available for public inspection. This filing may also be viewed on the Internet at http://www.ferc.fed.us/online/rims.htm (call 202–208–2222 for assistance).

Linwood A. Watson, Jr.,

Acting Secretary.

[FR Doc. 00–14144 Filed 6–5–00; 8:45 am]

BILLING CODE 6717–01–M

DEPARTMENT OF ENERGY

Federal Energy Regulatory Commission

[Project No. 11685–001]

The Stockport Mill County Inn; Notice Rescinding Prior Notice (May 23, 2000); Notice of Application Ready for Environmental Analysis and Soliciting Comments, Recommendations, Terms and Conditions, and Prescriptions

May 31, 2000.

On May 23, 2000, a notice of application ready for environmental analysis and soliciting comments, recommendations, terms and conditions, and prescriptions was issued for the Stockport Mill Country Inn Water Power Project No. 11685. On April 11, 2000, a notice of application ready for environmental analysis and soliciting comments, recommendations, terms and conditions, and prescriptions was also issued for the Stockport Mill Country Inn Water Power Project. Since two identical notices were issued for the same project and applicant, the notice issued on May 23, 2000 (65 FR 34462, published May 30, 2000), is rescinded.

The deadline for filing comments, recommendations, terms and conditions, and prescriptions is June 12, 2000.

Linwood A. Watson, Jr.,

Acting Secretary.

[FR Doc. 00–14081 Filed 6–5–00; 8:45 am]

BILLING CODE 6717–01–M

DEPARTMENT OF ENERGY

Federal Energy Regulatory Commission

[Docket No. EL00–67–000]

Strategic Power Management, Inc., Complianant, v. New York Independent System Operator, Respondent; Notice of Filing

May 31, 2000.

Take notice that on May 10, 2000, Strategic Power Management, Inc. (SPM) filed a supplement to its Complaint filed on April 20, 2000 pursuant to Section 206 of the Federal Energy Regulatory Commission's (Commission) Regulations, 18 CFR 385.206 and Section 206 of the Federal Power Act.

Any person desiring to be heard or to protect this filing should file a motion to intervene or protest with the Federal Energy Regulatory Commission, 888 First Street, N.W., Washington, D.C. 20426, in accordance with Rules 211

and 214 of the Commission's Rules of Practice and Procedure (18 CFR 385.211 and 385.214). All such motions or protests must be filed on or before June 12, 2000. Protests will be considered by the Commission in determining the appropriate action to be taken, but will not serve to make protestants parties to the proceeding. Any person wishing to become a party must file a motion to intervene. Copies of this filing are on file with the Commission and are available for public inspection in the Public Reference Room. This filing may also be viewed on the Internet at http://www.ferc.fed.us/online/rims.htm (call 202–208–2222) for assistance. Answers to the supplement to the compliant shall also be due on or before June 12, 2000.

David P. Boergers,

Secretary.

[FR Doc. 00–14119 Filed 6–5–00; 8:45 am]

BILLING CODE 6717–01–M

DEPARTMENT OF ENERGY

Federal Energy Regulatory Commission

[Docket No. ER00–2562–000]

Tampa Electric Company; Notice of Filing

May 25, 2000.

Take notice that on May 22, 2000, Tampa Electric Company (Tampa Electric) tendered for filing service agreements with Cargill-Alliant, LLC (Cargill-Alliant) for firm and non-firm point-to-point transmission service under Tampa Electric's open access transmission tariff.

Tampa Electric proposes an effective date of May 19, 2000, for the tendered service agreements, and therefore requests waiver of the Commission's notice requirement.

Copies of the filing have been served on Cargill-Alliant and the Florida Public Service Commission.

Any person desiring to be heard or to protest such filing should file a motion to intervene or protest with the Federal Energy Regulatory Commission, 888 First Street, NE, Washington, DC 20426, in accordance with Rules 211 and 214 of the Commission's Rules of Practice and Procedure (18 CFR 385.211 and 385.214). All such motions and protests should be filed on or before June 12, 2000. Protests will be considered by the Commission to determine the appropriate action to be taken, but will not serve to make protestants parties to the proceedings. Any person wishing to become a party must file a motion to intervene. Copies of this filing are on file with the Commission and are available for public inspection. This filing may also be viewed on the Internet at http://www.ferc.fed.us/online/rims.htm (call 202–208–2222 for assistance).

Linwood A. Watson, Jr.,

Acting Secretary.

[FR Doc. 00–14141 Filed 6–5–00; 8:45 am]

BILLING CODE 6717–01–M

DEPARTMENT OF ENERGY

Federal Energy Regulatory Commission

[Project No. 2077–016]

USGen New England, Inc.; Notice Extending Deadline for Filing Comments, Final Terms and Conditions, Recommendations and Prescriptions, and Requesting Reply Comments

May 31, 2000.

On May 30, 2000, the Appalachian Mountain Club, Connecticut River Joint Commission, Connecticut River Watershed Council, Conservation Law Foundation, New Hampshire Rivers Council, Trout Unlimited Vermont Chapter, and Trout Unlimited New Hampshire Chapter (collectively, ''NGO's''),[1] and USGen New England requested a second extension to October 1, 2000, for filing comments, final terms and conditions, and recommendations and prescriptions for the Fifteen Mile Falls Project, located on the Connecticut River, in New Hampshire and Vermont. The Vermont Agency of Natural Resources supported the deadline extension in a May 24, 2000 filing.

Although the Commission is concerned with the progress of proceedings under the Alternative Licensing Process (ALP), a goal of the ALP is to resolve issues in a collaborative manner so that the Commission may accelerate the review of the license application. In this instance, we recognize the close connection between the management plans and other aspects of the license application, and the benefit to the stakeholders of resolving as many issues as possible before they submit their prescriptions, final terms and conditions, recommendations and comments. Additionally, we have received assurances from the stakeholders that they will diligently pursue resolution of the issues, including the issuance of a project water quality certificate. We will therefore, pursuant to Rule 2008 of the Commission's Rules of Practice and Procedure,[2] extend the deadline to October 1, 2000, for the collaborative team stakeholders to file all prescriptions, final terms and conditions, recommendations and comments.

The applicant contact is Mr. Cleve Kapala, USGen New England, Inc., 46 Centerra Parkway, Lebanon, NH 03766. The FERC contact is William Guey-Lee, E-mail address: william.gueylee@ferc.fed.us, or telephone (202) 219–2808.

All documents (original and eight copies) should be filed with: David P. Boergers, Secretary, Federal Energy Regulatory Commission, 888 First St. NE., Washington, DC 20426. The Commission's Rules of Practice and Procedure require all intervenors filing documents with the Commission to serve a copy of that document on each person whose name appears on the official service list for the project. Further, if an intervenor files comments or documents with the Commission relating to the merits of an issue that may affect the responsibilities of a particular resource agency, the intervenor must also serve a copy of the document on that resource agency.

All filings must: (1) Bear in all capital letters the title ''COMMENTS,'' ''RECOMMENDATIONS,'' ''TERMS AND CONDITIONS,'' ''PRESCRIPTIONS,'' or ''REPLY COMMENTS;'' (2) set forth in the heading the name of the applicant and the project number of the application and APEA to which the filing responds; (3) furnish the name, address, and telephone number of the person submitting the filing; and (4) otherwise comply with the requirements of 18 CFR 385.2001 through 385.2005. All comments, recommendations, terms and conditions or prescriptions must set forth their evidentiary basis and otherwise comply with the requirements of 18 CFR 4.34(b). Any of these documents must be filed by providing the original and the number of copies required by the Commission's regulations to: Secretary, Federal Energy Regulatory Commission, 888 First Street, NE., Washington, DC 20426. An additional copy must be sent to: Director, Division of Environmental and Engineering Review, Office of Energy Projects, Federal Energy Regulatory Commission, at the above address. Each filing must be accompanied by proof of service on all persons listed on the service list prepared by the Commission

[1] The NGOs are also signatories to the Settlement Agreement for the project.

[2] 18 CFR 385.2008.

in this proceeding, in accordance with 18 CFR 4.34(b) and 385.2010.

David P. Boergers,

Secretary.

[FR Doc. 00–14082 Filed 6–5–00; 8:45 am]

BILLING CODE 6717–01–M

DEPARTMENT OF ENERGY

Federal Energy Regulatory Commission

[Docket Nos. EC00–27–001 and EC00–28–001]

UtiliCorp United Inc., *et al.;* Notice of Filing

May 25, 2000.

Take notice that on May 19, 2000, UtiliCorp United Inc., *et al.* filed their response to the Federal Energy Regulatory Commission's (Commission) letter order dated April 17, 2000 in the above-referenced dockets.

Any person desiring to be heard or to protest such filing should file a motion to intervene or protest with the Federal Energy Regulatory Commission, 888 First Street, NE, Washington, DC 20426, in accordance with Rules 211 and 214 of the Commission's Rules of Practice and Procedure (18 CFR 385.211 and 385.214). All such motions and protests should be filed on or before June 8, 2000. Protests will be considered by the Commission to determine the appropriate action to be taken, but will not serve to make protestants parties to the proceedings. Any person wishing to become a party must file a motion to intervene. Copies of this filing are on file with the Commission and are available for public inspection. This filing may also be viewed on the Internet at http://www.ferc.fed.us/online/rims.htm (call 202–208–2222 for assistance).

Linwood A. Watson, Jr.,

Acting Secretary.

[FR Doc. 00–14129 Filed 6–5–00; 8:45 am]

BILLING CODE 6717–01–M

DEPARTMENT OF ENERGY

Federal Energy Regulatory Commission

[Docket No. EC00–96–000, et al.]

P&L Coal Holdings Corporation, et al.; Electric Rate and Corporate Regulation Filings

May 30, 2000.

Take notice that the following filings have been made with the Commission:

1. P&L Coal Holdings Corporation; Citizens Power LLC; Citizens Power Holdings One, LLC; FC Energy Finance I, Inc.

[Docket No. EC00–96–000]

Take notice that on May 23, 2000, P&L Coal Holdings Corporation, Citizens Power LLC, Citizens Power Holdings One, LLC, and FC Energy Finance I, Inc. filed an application for an order authorizing the proposed sale of equity interests in Hartford Power Sales, L.L.C., CL Power Sales One, L.L.C., CL Power Sales Two, L.L.C., CL Power Sales Six, L.L.C., CL Power Sales Seven, L.L.C., CL Power Sales Eight, L.L.C., CL Power Sales Nine, L.L.C., and CL Power Sales Ten, L.L.C. to FC Energy Finance I, Inc. or a subsidiary thereof.

Comment date: June 22, 2000, in accordance with Standard Paragraph E at the end of this notice.

2. Merchant Energy Group of the Americas, Inc.

[Docket No. ER00–2210–001]

Take notice that on May 24, 2000, Merchant Energy Group of the Americas, Inc. (MEGA) tendered for filing a substitute amended FERC Electric Rate Schedule No. 1 to revise the rate schedule filing made by MEGA on April 14, 2000, in Docket No. ER00–2210–000. The substitute amended rate schedule retains the prohibition on sales to affiliate public utilities with a franchised service territory and makes other minor word changes.

Comment date: June 14, 2000, in accordance with Standard Paragraph E at the end of this notice.

3. Virginia Electric and Power Company

[Docket No. ER00–2595–000]

Take notice that on May 25, 2000, Virginia Electric and Power Company (Virginia Power), tendered for filing the following:

1. Service Agreement for Firm Point-to-Point Transmission Service by Virginia Electric and Power Company to Public Service Company of Colorado;

2. Service Agreement for Non-Firm Point-to-Point Transmission Service by Virginia Electric and Power Company to Public Service Company of Colorado.

The foregoing Service Agreements are tendered for filing under the Open Access Transmission Tariff to Eligible Purchasers dated July 14, 1997. Under the tendered Service Agreements, Virginia Power will provide point-to-point service to the Transmission Customer under the rates, terms and conditions of the Open Access Transmission Tariff. Virginia Power requests an effective date of May 25, 2000, the date of filing of the Service Agreements.

Copies of the filing were served upon Public Service Company of Colorado, the Virginia State Corporation Commission, and the North Carolina Utilities Commission.

Comment date: June 15, 2000, in accordance with Standard Paragraph E at the end of this notice.

4. Indianapolis Power & Light Company

[Docket No. ER00–2594–000]

Take notice that on May 25, 2000, Indianapolis Power & Light Company (IPL), tendered for filing various service agreements under IPL's Open Access Transmission Tariff placing itself and others as customers under the Tariff, and an index of customers.

Comment date: June 15, 2000, in accordance with Standard Paragraph E at the end of this notice.

5. Wisconsin Electric Power Company

[Docket No. ER00–2593–000]

Take notice that on May 25, 2000, Wisconsin Electric Power Company (Wisconsin Electric), tendered for filing an electric service agreement under its Market Rate Sales Tariff (FERC Electric Tariff, Original Volume No. 8) with British Columbia Power Exchange Corporation.

Wisconsin Electric respectfully requests an effective date of May 22, 2000 to allow for economic transactions.

Copies of the filing have been served on British Columbia Power Exchange Corporation, the Michigan Public Service Commission, and the Public Service Commission of Wisconsin.

Comment date: June 15, 2000, in accordance with Standard Paragraph E at the end of this notice.

6. Black Hills Corporation

[Docket No. ER00–2576–000]

Take notice that on May 23, 2000, Black Hills Corporation, which operates its electric utility business under the assumed name of Black Hills Power and Light Company (Black Hills), tendered for filing an executed Network Integration Transmission Service Agreement with the State of South Dakota.

Copies of the filing were provided to the regulatory commission of each of the states of South Dakota, Wyoming and Montana.

Black Hills has requested that further notice requirement be waived and the tariff and executed service agreements be allowed to become effective June 1, 2000.

Comment date: June 13, 2000, in accordance with Standard Paragraph E at the end of this notice.

7. Duquesne Light Company

[Docket No. ER00–2342–001]

Take notice that on May 26, 2000, Duquesne Light Company (Duquesne) tendered for filing an amendment to its Open Access Transmission Tariff, filed with the Commission on April 28, 2000 in Docket No. ER00–2342–000.

Comment date: June 16, 2000, in accordance with Standard Paragraph E at the end of this notice.

8. Wisconsin Energy Corporation Operating Companies

[Docket No. ER00–1319–002]

On March 28, 2000, the Commission issued an ''Order Accepting for Filing and Suspending Proposed Rates, Requiring Compliance Filing, Accepting Revisions to Open Access Tariff and Establishing Hearing Procedures'' in the above-docketed proceeding (March 28 Order). Requests for Rehearing were due to be filed on or before April 27, 2000. On April 28, 2000, Wisconsin Energy Corporation Operating Companies (Wisconsin Energy) filed a Request for Rehearing.[1]

Section 313(a) of the Federal Power Act[2] requires an aggrieved party to file a request for rehearing within thirty days after the issuance of the Commission's order. Because the 30-day deadline for requesting rehearing is statutorily based, it cannot be extended and Wisconsin Energy's request for rehearing must be rejected as untimely.

Standard Paragraphs

E. Any person desiring to be heard or to protest such filing should file a motion to intervene or protest with the Federal Energy Regulatory Commission, 888 First Street, NE, Washington, DC 20426, in accordance with rules 211 and 214 of the Commission's rules of practice and procedure (18 CFR 385.211 and 385.214). All such motions or protests should be filed on or before the comment date. Protests will be considered by the Commission in determining the appropriate action to be taken, but will not serve to make protestants parties to the proceeding. Any person wishing to become a party must file a motion to intervene. Copies of these filings are on file with the Commission and are available for public inspection. This filing may also be viewed on the Internet at http://www.ferc.fed.us/ online/rims.htm (call 202–208–2222 for assistance).

David P. Boergers,

Secretary.

[FR Doc. 00–14118 Filed 6–5–00; 8:45 am]

BILLING CODE 6717–01–P

[1] Wisconsin Energy also asked for reconsideration of the March 28 Order. This notice does not address the request for reconsideration.

[2] 16 U.S. C. § 8251.

DEPARTMENT OF ENERGY

Federal Energy Regulatory Commission

Notice of Non-Project Use of Project Lands and Waters and Soliciting Comments, Motions To Intervene, and Protests

May 31, 2000.

Take notice that the following application has been filed with the Commission and is available for public inspection:

a. *Application Type:* Non-Project Use of Project Lands and Waters.

b. *Project No:* 2503–054.

c. *Date Filed:* December 13, 1999.

d. *Applicant:* Duke Energy Corporation.

e. *Name of Project:* Keowee-Toxaway Hydroelectic Project.

f. *Location:* On Lake Keowee in the South Oak Pointe Subdivision in Seneca Township, Oconee County, South Carolina. The project does not utilize federal or tribal lands.

g. *Filed Pursuant to:* Federal Power Act, 16 U.S.C. 791(a)–825(r).

h. *Applicant Contact:* Mr. E.M. Oakley, Duke Energy Corporation, P.O. Box 1006 (EC12Y), Charlotte, NC 28201–1006. (704) 382–5778.

i. *FERC Contact:* Any questions on this notice should be addressed to CarLisa Linton at (202) 219–2802, or e-mail address: carlisa.lintonpeters@ferc.fed.us.

j. *Deadline for filing comments and/ or motions:* June 28, 2000.

All documents (original and eight copies) should be filed with: David P. Boergers, Secretary, Federal Energy Regulatory Commission, 888 First Street, NE., Washington, DC 20426. Please include the Project Number (P–2503–054) on any comments or motions filed.

k. *Description of Proposal:* Duke Power Company, a division of Duke Energy Corporation, the Licensee for Project No. 2503, proposes to lease to Crescent Resources, Inc. (Crescent) for the South Oak Pointe Subdivision 1 parcel containing 1.044 acres of project land for the construction of: (a) 3 cluster docks with (b) 12 boat slips each (providing a total of 36 boat slips). The boat slips would provide access to the reservoir for off-water residents of the South Pointe Oak Subdivision. In addition, 800 cubic yards of dredging is proposed.

l. *Locations for the Application:* A copy of the application, filed December 13, 1999, is available for inspection and reproduction at the Commission's Public Reference Room, located at 888 First Street, NE, Room 2A, Washington, DC 20426, or by calling (202) 208–1371. This filing may reviewed on the internet at *http://www.ferc.fed.us/online/ rims.htm* (call (202) 208–2222 for assistance.) A copy is also available for inspection and reproduction at the address listed in item ''h'' above.

m. Individuals desiring to be included on the Commission's mailing list should so indicate by writing to the Secretary of the Commission.

Comments, Protests, or Motions to Intervene—Anyone may submit comments, a protest, or a motion to intervene in accordance with the requirements of Rules of Practice and Procedure, 18 CFR 385.210, .211, .214. In determining the appropriate action to take, the Commission will consider all protests or other comments filed, but only those who file a motion to intervene in accordance with the Commission's Rules may become a party to the proceeding. Any comments, protests, or motions to intervene must be received on or before the specified comment date for the particular application.

Filing and Service of Responsive Documents—Any filings must bear in all capital letters the title ''COMMENTS'', ''RECOMMENDATIONS FOR TERMS AND CONDITIONS'', ''PROTEST'', or ''MOTION TO INTERVENE'', as applicable, and the Project Number of the particular application to which the filing refers. Any of the above-named documents must be filed by providing the original and the number of copies provided by the Commission's regulations to: The Secretary, Federal Energy Regulatory Commission, 888 First Street, NE, Washington, DC 20426. A copy of any motion to intervene must also be served upon each representative of the Applicant specified in the particular application.

Agency Comments—Federal, state, and local agencies are invited to file comments on the described application. A copy of the application may be obtained by agencies directly from the Applicant. If an agency does not file comments within the time specified for filing comments, it will be presumed to have no comments. One copy of an

agency's comments must also be sent to the Applicant's representatives.

Linwood A. Watson, Jr.,

Acting Secretary.

[FR Doc. 00–14076 Filed 6–5–00; 8:45 am]

BILLING CODE 6717–01–M

ENVIRONMENTAL PROTECTION AGENCY

[FRL–6709–8]

Agency Information Collection Activities: Submission for OMB Review; Comment Request; EPA Indoor Environmental Quality Questionnaire

AGENCY: Environmental Protection Agency (EPA).

ACTION: Notice.

SUMMARY: In compliance with the Paperwork Reduction Act (44 U.S.C. 3501 *et seq.*), this document announces that the following Information Collection Request (ICR) has been forwarded to the Office of Management and Budget (OMB) for review and approval:

Title: EPA Indoor Environmental Quality Questionnaire, OMB Control Number 2060–0244, expiration date 5/31/2000. The ICR describes the nature of the information collection and its expected burden and cost; where appropriate, it includes the actual data collection instrument.

DATES: Comments must be submitted on or before July 6, 2000.

FOR FURTHER INFORMATION CONTACT: Sandy Farmer at EPA by phone at (202) 260–2740, by e-mail at Farmer.Sandy@epa.gov or download off the Internet at http://www.epa.gov/icr and refer to EPA ICR No. 1619.03.

SUPPLEMENTARY INFORMATION:

Title: EPA Indoor Environmental Quality Questionnaire, OMB Control Number 2060–0244 EPA ICR Number 1619.03, expiration date 5/31/00. This is a request for extension of a currently approved collection.

Abstract: The Indoor Environmental Quality Questionnaire is a component of the EPA indoor air quality (IAQ) research program, used in the Building Assessment Survey and Evaluation (BASE) and related intervention studies. In this program, EPA is studying up to 200 large commercial and public buildings. The purpose of this program is to develop a national baseline assessment of the indoor air in such buildings and to test the effectiveness of current EPA guidance for improving IAQ. The activities EPA will conduct under this program include an Indoor Environmental Quality Questionnaire, building inspections, interviews with building maintenance workers, environmental measurements (*e.g.*, ventilation rates, concentrations of indoor air pollutants), and other quantitative and qualitative assessments. By conducting this research, EPA will begin to be able to assess the key building parameters that affect IAQ, the incidence of certain IAQ-related health and comfort problems, and effectiveness of strategies to improve IAQ and avoid IAQ problems. The Indoor Environmental Quality Questionnaire is a voluntary and anonymous questionnaire asking for information pertaining to work station characteristics, working conditions, exposure to pollutants, health and well-being, and stress. Data from the Indoor Environmental Quality Questionnaire will be used to compare the measured building parameters and health effects.

Under the existing ICR authority, EPA has used this Questionnaire in 113 buildings to date.

An agency may not conduct or sponsor, and a person is not required to respond to, a collection of information unless it displays a currently valid OMB control number. The OMB control numbers for EPA's regulations are listed in 40 CFR part 9 and 48 CFR Chapter 15. The **Federal Register** document required under 5 CFR 1320.8(d), soliciting comments on this collection of information was published on February 12, 1999 (64 FR 7188); 1 comment was received.

Burden Statement: The annual public reporting and recordkeeping burden for this collection of information is estimated to average 14 minutes per response. Burden means the total time, effort, or financial resources expended by persons to generate, maintain, retain, or disclose or provide information to or for a Federal agency. This includes the time needed to review instructions; develop, acquire, install, and utilize technology and systems for the purposes of collecting, validating, and verifying information, processing and maintaining information, and disclosing and providing information; adjust the existing ways to comply with any previously applicable instructions and requirements; train personnel to be able to respond to a collection of information; search data sources; complete and review the collection of information; and transmit or otherwise disclose the information.

Respondents/Affected Entities: Occupants of commercial and public facilities in wide variety of fields and SIC codes.

Estimated Number of Respondents: 500.

Frequency of Response: One-time response for 60% of respondents; 40% of respondents will complete questionnaire twice with a one-year interval between responses.

Estimated Total Annual Hour Burden: 127.

Estimated Total Annualized Cost Burden: $0.

Send comments on the Agency's need for this information, the accuracy of the provided burden estimates, and any suggested methods for minimizing respondent burden, including through the use of automated collection techniques to the following addresses. Please refer to EPA ICR No. 1619.03 and OMB Control No. 2060–0244 in any correspondence.

Ms. Sandy Farmer, U.S. Environmental Protection Agency, Office of Environmental Information, Collection Strategies Division, Mail Code 2822, 1200 Pennsylvania Avenue, NW, Washington, DC 20460; and

Office of Information and Regulatory Affairs, Office of Management and Budget, Attention: Desk Officer for EPA, 725 17th Street, NW, Washington, DC 20503.

Dated: May 30, 2000.

Oscar Morales,

Director, Collection Strategies Division.

[FR Doc. 00–14180 Filed 6–5–00; 8:45 am]

BILLING CODE 6560–50–P

ENVIRONMENTAL PROTECTION AGENCY

[FRL–6710–2]

Agency Information Collection Activities: Submission for OMB Review; Comment Request; New Source Performance Standards (NSPS), Surface Coating of Plastic Parts for Business Machines

AGENCY: Environmental Protection Agency (EPA).

ACTION: Notice.

SUMMARY: In compliance with the Paperwork Reduction Act (44 U.S.C. 3501 *et seq.*), this document announces that the following Information Collection Request (ICR) has been forwarded to the Office of Management and Budget (OMB) for review and approval: New Source Performance Standards (NSPS), Subpart TTT, Surface Coating of Plastic Parts for Business Machines; OMB Control Number 2060–0162; expiration date August 31, 2000. The ICR describes the nature of the

information collection and its expected burden and cost; where appropriate, it includes the actual data collection instrument.

DATES: Comments must be submitted on or before July 6, 2000.

FOR FURTHER INFORMATION CONTACT: For a copy of the ICR contact Sandy Farmer at EPA by phone at (202) 260–2740, by E-Mail at Farmer.Sandy@epamail.epa.gov or download off the Internet at *http://www.epa.gov/icr* and refer to EPA ICR No.1093.06. For technical questions about the ICR contact Anthony Raia at 202-564–6045.

SUPPLEMENTARY INFORMATION:

Title: New Source Performance Standards (NSPS), Subpart TTT, Surface Coating of Plastic Parts for Business Machines. OMB Control Number 2060–0162, EPA ICR Number 1093.06, expiration date 8/31/2000. This is a request for extension of a currently approved collection.

Abstract: Industrial surface coating operations emit volatile organic compounds (VOCs) in quantities that the Administrator believes cause or contribute to air pollution that may reasonably be anticipated to endanger public health or welfare. Consequently, New Source Performance Standards for the surface coating of plastic parts for business machines were promulgated. VOC emissions from these facilities are the result of operation of the spray booths that apply prime coats, color coats, texture coats or touch-up coats. The standards ensure that owners or operators of these facilities use coatings that contain a low proportion of VOCs, and coating application equipment that provides a high transfer efficiency. In addition, or as an alternative, sources may use control equipment to meet the emission limits. In order to ensure compliance with these standards, adequate recordkeeping is necessary. In the absence of such information, enforcement personnel would be unable to determine whether the standards are being met on a continuous basis, as required by the Clean Air Act.

An agency may not conduct or sponsor, and a person is not required to respond to, a collection of information unless it displays a currently valid OMB control number. The OMB control numbers for EPA's regulations are listed in 40 CFR part 9 and 48 CFR Chapter 15. The **Federal Register** document required under 5 CFR 1320.8(d), soliciting comments on this collection of information was published on January 21, 2000 (61 FR 45959); no comments were received.

Burden Statement: The annual public reporting and recordkeeping burden for this collection of information is estimated to average 30 hours per response. Burden means the total time, effort, or financial resources expended by persons to generate, maintain, retain, or disclose or provide information to or for a Federal agency. This includes the time needed to review instructions; develop, acquire, install, and utilize technology and systems for the purposes of collecting, validating, and verifying information, processing and maintaining information, and disclosing and providing information; adjust the existing ways to comply with any previously applicable instructions and requirements; train personnel to be able to respond to a collection of information; search data sources; complete and review the collection of information; and transmit or otherwise disclose the information.

Respondents/Affected Entities: Industrial surface coating companies that process plastic parts used in the manufacture of business machines.

Estimated Number of Respondents: 41.

Frequency of Response: Initial, Quarterly, Semi-Annually.

Estimated Total Annual Hour Burden: 3,639 hours.

Estimated Total Annualized Capital, O&M Cost Burden: 0.

Send comments on the Agency's need for this information, the accuracy of the provided burden estimates, and any suggested methods for minimizing respondent burden, including through the use of automated collection techniques to the following addresses. Please refer to EPA ICR No. 1093.06 and OMB Control No. 2060–0162 in any correspondence.

Ms. Sandy Farmer, U.S. Environmental Protection Agency, Office of Environmental Information, Collection Strategies Division (2822), 1200 Pennsylvania Ave., NW, Washington, DC 20460;

and

Office of Information and Regulatory Affairs, Office of Management and Budget, Attention: Desk Officer for EPA, 725 17th Street, NW, Washington, DC 20503.

Dated: May 22, 2000.

Oscar Morales,

Director, Collection Strategies Division.

[FR Doc. 00–14181 Filed 6–5–00; 8:45 am]

BILLING CODE 6560–50–P

ENVIRONMENTAL PROTECTION AGENCY

[FRL–6710–1]

Agency Information Collection Activities: Submission for OMB Review; Comment Request, EPA's WasteWise Program

AGENCY: Environmental Protection Agency (EPA).

ACTION: Notice.

SUMMARY: In compliance with the Paperwork Reduction Act (44 U.S.C. 3501 *et seq.*), this document announces that the following Information Collection Request (ICR) has been forwarded to the Office of Management and Budget (OMB) for review and approval: Reporting and Recordkeeping Requirements Under EPA's WasteWise Program; OMB Control No. 2050–0139; expiring July 31, 2000. The ICR describes the nature of the information collection and its expected burden and cost; where appropriate, it includes the actual data collection instrument.

DATES: Comments must be submitted on or before July 6, 2000.

FOR FURTHER INFORMATION CONTACT: Sandy Farmer at EPA by phone at (202) 260–2740, by E-Mail at *Farmer.Sandy@epamail.epa.gov* or download a copy of the ICR off the Internet at *http://www.epa.gov/icr* and refer to EPA ICR No. 1698.04. For technical questions about the ICR contact Barbara A. Nichols on 703–308–8659.

SUPPLEMENTARY INFORMATION:

Title: Reporting and Recordkeeping Requirements Under EPA's WasteWise Program, OMB Control No. 2050–0139; EPA ICR No. 1698.04, expiration date July 31, 2000. This is a request for extension of a currently approved collection.

Abstract: EPA's voluntary WasteWise program encourages businesses and other organizations to reduce solid waste through waste prevention, recycling, and the purchase or manufacture of recycled-content products. WasteWise participants include Partners, which commit to implementing waste reduction activities of choice, and Endorsers, which choose to promote the WasteWise program and waste reduction to their members. Endorsers, which are typically trade associations or other membership-based organizations, are asked to submit only a one-page form, the Endorser Registration Form. This form identifies the organization, principal contact, and the activities to which the Endorser commits. Partners are asked to fill out

three forms as follows. The Partner Registration Form identifies the organization and the facilities that will participate in WasteWise. Each Partner develops its own waste reduction goals and submits a one-page Goals Identification Form to EPA every three years. Partners also report annually on the progress made toward achieving these goals in the Annual Reporting Form.

The EPA WasteWise program uses the voluntarily submitted information to: (1) Identify and recognize outstanding waste reduction achievements by individual organizations, (2) compile aggregate results that indicate overall accomplishments of WasteWise Partners, (3) identify cost-effective waste reduction strategies to share with other organizations, and (4) identify topics on which to develop assistance and information efforts.

An agency may not conduct or sponsor, and a person is not required to respond to, a collection of information unless it displays a currently valid OMB control number. The OMB control numbers for EPA's regulations are listed in 40 CFR part 9 and 48 CFR Chapter 15. The **Federal Register** document required under 5 CFR 1320.8(d), soliciting comments on this collection of information, was published on March 2, 2000 (65 *FR* 11304). No comments were received.

Burden Statement: The annual public reporting and recordkeeping burden for this collection of information is estimated to average 37 hours per response. Burden means the total time, effort, or financial resources expended by persons to generate, maintain, retain, or disclose or provide information to or for a Federal agency. This includes the time needed to review instructions; develop, acquire, install, and utilize technology and systems for the purposes of collecting, validating, and verifying information, processing and maintaining information, and disclosing and providing information; adjust the existing ways to comply with any previously applicable instructions and requirements; train personnel to be able to respond to a collection of information; search data sources; complete and review the collection of information; and transmit or otherwise disclose the information.

Respondents/Affected Entities: WasteWise Program Volunteers.

Estimated Number of Respondents: 1270.

Frequency of Response: On Occasion, annually.

Estimated Total Annual Hour Burden: 64,260.

Estimated Total Annualized Capital, O&M Cost Burden: 0.

Send comments on the Agency's need for this information, the accuracy of the provided burden estimates, and any suggested methods for minimizing respondent burden, including through the use of automated collection techniques to the following addresses. Please refer to EPA ICR No. 1698.04 and OMB Control No. 2050–0139 in any correspondence.

Ms. Sandy Farmer, U.S. Environmental Protection Agency, Office of Environmental Information, Collection Strategies Division (2822), 1200 Pennsylvania Ave., NW, Washington, DC 20460;

and

Office of Information and Regulatory Affairs, Office of Management and Budget, Attention: Desk Officer for EPA, 725 17th Street, NW, Washington, DC 20503.

Dated: May 30, 2000.

Oscar Morales,

Director, Collection Strategies Division.

[FR Doc. 00–14182 Filed 6–5–00; 8:45 am]

BILLING CODE 6560–50–P

ENVIRONMENTAL PROTECTION AGENCY

[FRL–6709–9]

Agency Information Collection Activities; Submission for OMB Review; Comment Request, Data Generation for Pesticide Re-registration

AGENCY: Environmental Protection Agency (EPA).

ACTION: Notice.

SUMMARY: In compliance with the Paperwork Reduction Act (44 U.S.C. 3501 *et seq.*), this document announces that the following Information Collection Request (ICR), has been forwarded to the Office of Management and Budget (OMB) for review and approval: Data Generation for Pesticide Re-registration, OMB No. 2070–0107, expiration date May 30, 2000. The ICR describes the nature of the information collection activity and its expected burden and costs; where appropriate, it includes the actual data collection instrument.

DATES: Comments must be submitted on or before July 6, 2000.

FOR FURTHER INFORMATION CONTACT: For a copy of the ICR contact Sandy Farmer at EPA by phone at (202) 260–2740, by E-Mail at Farmer.Sandy@epamail.epa.gov or download off the Internet at *http://www.epa.gov/icr* and refer to EPA ICR No. 1504.04. For technical questions about the ICR contact Angela Hofmann at (202) 260–2922.

SUPPLEMENTARY INFORMATION:

Title: Data Generation for Pesticide Reregistration OMB Control No. 2070–0107, EPA ICR No. 1504.04, expiration date May 30, 2000.

Abstract: Pursuant to section 4 of the Federal Insecticide, Fungicide, and Rodenticide Act (FIFRA), as amended, EPA must assess health and safety data for all pesticide active ingredients originally registered before November 1, 1984, to determine whether such pesticides' use poses unreasonable risks to human health or the environment. In addition, the Federal Food Drug and Cosmetic Act (FFDCA), as amended by the Food Quality Protection Act of 1996 (FQPA), requires the Agency to reassess all existing tolerances (maximum limits for pesticide residues in food or feed) to ensure that they meet the safety standard in FPQA.

Currently, EPA is implementing Phase 5 of the Reregistration Program. In this final stage, the Agency is actively reviewing the studies submitted for each pesticide and determining whether or not the pesticide is eligible for reregistration—that is, whether the data base is substantially complete, and the pesticide does not cause unreasonable adverse effects to people or the environment when used in accordance with approved labeling. EPA is also reassessing tolerances for any related food uses, and considering whether the pesticide meets the new safety standard in FQPA.

An agency may not conduct or sponsor, and a person is not required to respond to, a collection of information unless it displays a currently valid OMB control number. The OMB control numbers for EPA's regulations are listed in 40 CFR part 9 and 48 CFR Chapter 15. The **Federal Register** document required under 5 CFR 1320.8(d), soliciting comments on this collection of information was published on June 16, 1999 (64 FR 32225; no comments were received.

Burden Statement: The annual public reporting and recordkeeping burden for this collection of information is estimated to average 3,024 hours per response. Burden means the total time, effort, or financial resources expended by persons to generate, maintain, retain, or disclose or provide information to or for a Federal agency. This includes the time needed to review instructions; develop, acquire, install, and utilize technology and systems for the purposes

of collecting, validating, and verifying information, processing and maintaining information, and disclosing and providing information; adjust the existing ways to comply with any previously applicable instructions and requirements; train personnel to be able to respond to a collection of information; search data sources; complete and review the collection of information; and transmit or otherwise disclose the information.

Respondents/Affected Entities: Pesticide registrants seeking re-registration.

Estimated number of potential Responses: 30.

Frequency of response: Once, after the Record of Decision is issued.

Estimated total annual Respondent burden: 90,725 hours.

Estimated total annual Capital, O&M costs: 0.

Send comments on the Agency's need for this information, the accuracy of the provided burden estimates, and any suggested methods for minimizing respondent burden, including through the use of automated collection techniques to the following addresses. Please refer to EPA ICR No. 1504.04 and OMB Control No. 2070–0107 in any correspondence.

Ms. Sandy Farmer, U.S. Environmental Protection Agency, Office of Environmental Information, Collection Strategies Division (2822), 1200 Pennsylvania Ave., NW, Washington, DC 20460;

and

Office of Information and Regulatory Affairs, Office of Management and Budget, Attention: Desk Officer for EPA, 725 17th Street, NW, Washington, DC 20503.

Dated: May 22, 2000.

Oscar Morales,

Director, Collection Strategies Division.

[FR Doc. 00–14184 Filed 6–5–00; 8:45 am]

BILLING CODE 6560–50–P

ENVIRONMENTAL PROTECTION AGENCY

[OPP–00662; FRL–6590–9]

EPA-USDA Committee To Advise on Reassessment and Transition; Notice of Establishment and Public Meeting

AGENCY: Environmental Protection Agency (EPA).

ACTION: Notice of establishment and public meeting.

SUMMARY: The EPA-USDA Committee to Advise on Reassessment and Transition (CARAT) is being established in accordance with the Federal Advisory Committee Act as a subcommittee under the auspices of the EPA National Advisory Council for Environmental Policy and Technology (NACEPT). The purpose of CARAT is to provide advice and counsel to the Administrator of EPA and the Secretary of Agriculture regarding strategic approaches for pest management planning and tolerance reassessment for pesticides as required by the Food Quality Protection Act of 1996 (FQPA). CARAT is preceded by the Tolerance Reassessment Advisory Committee and will be guided by the principles set forth by the Vice President for EPA and the U.S. Department of Agriculture (USDA) to work together to ensure smooth implementation of FQPA through use of sound science, consultation with stakeholders, increased transparency, and reasonable transition for agriculture.

DATES: The first meeting of CARAT will be held on Friday, June 23, 2000, from 9 a.m. to 5 p.m. A background information session, with limited public seating, is being offered to the CARAT members on Thursday, June 22, 2000, from 9 a.m. to 5 p.m.

ADDRESSES: The first meeting of CARAT will be held on June 23, 2000, at the National Rural Electric Cooperative Association (NRECA) Conference Center, 4301 Wilson Boulevard, Arlington, VA 22203; telephone number: 703–907–5500. The NRECA Conference Center is located adjacent to the Ballston Metro Stop. The background information session, with limited public seating, will be held on June 22, 2000, for CARAT members at 1921 Jefferson Davis Highway, Crystal Mall #2, Rm. 1126 (Fishbowl), Arlington, VA 22202; telephone number: 703–305–7090.

FOR FURTHER INFORMATION CONTACT: Margie Fehrenbach or Terria Northern (7501C), Office of Pesticide Programs, Environmental Protection Agency, 1200 Pennsylvania Ave., NW., Washington, DC 20460; telephone number: 703–305–7090 or 703–305–7093; fax number: 703–308–4776; e-mail address: Fehrenbach.Margie@epa.gov or Northern.Terria@epa.gov.

I. Does This Action Apply to Me?

This action is directed to the public in general; however, it may be of interest to persons who are concerned about implementation of the Food Quality Protection Act (Public Law 104–170). Passed in 1996, this new law strengthens the nation's system for regulating pesticides on food. CARAT was preceded by the Tolerance Reassessment Advisory Committee which was established in 1998 in response to Vice President Gore's request for EPA and USDA to work together to ensure smooth implementation of FQPA. Since other entities may also be interested, the Agency has not attempted to describe all the specific entities that may be affected by this action. If you have any questions regarding the applicability of this action to a particular entity, consult the person listed under **FOR FURTHER INFORMATION CONTACT.**

II. How Can I Get Additional Information, Including Copies of This Document and Other Related Documents?

You may obtain electronic copies of this document, and certain other related documents that might be available electronically, from the EPA Internet Home Page at http://www.epa.gov/. To access this document, on the Home Page select ''Laws and Regulations'' and then look up the entry for this document under the ''**Federal Register**—Environmental Documents.'' You can also go directly to the **Federal Register** listings at http://www.epa.gov/fedrgstr/. To access information about CARAT, go directly to the Home Page for EPA's Office of Pesticide Programs at http://www.epa.gov/pesticides/carat.

List of Subjects

Environmental protection, Agriculture, Chemicals, Foods, Pesticides and Pests.

Dated: May 30, 2000.

Susan H. Wayland,

Acting Assistant Administrator for Prevention, Pesticides and Toxic Substances.

[FR Doc. 00–13942 Filed 6–5–00; 8:45 am]

BILLING CODE 6560–50–P

ENVIRONMENTAL PROTECTION AGENCY

[FRL–6710–7]

Benchmark Dose Software

AGENCY: Environmental Protection Agency.

ACTION: Notice of availability.

SUMMARY: This notice announces the availability of the U.S. Environmental Protection Agency (EPA) Benchmark Dose Software (BMDS Version 1.2). BMDS was developed by EPA's National Center for Environmental Assessment (NCEA) as a tool to facilitate the application of benchmark dose methods to the assessment of hazardous pollutants. The software and supporting documentation are available to Agency

personnel and to the general public, and can be downloaded from the NCEA internet web site or requested directly from NCEA (see addresses below).

ADDRESSES: To obtain a copy of the Benchmark Dose Software Version 1.2, direct your internet browser to http://epa.gov/ncea/bmds.htm. You will be instructed on how to download a self-extracting compressed file containing the BMDS program. Windows 95/98/NT and at least sixteen megabytes of RAM are required to run this version of the BMDS.

Accessing a copy of the BMDS program via the internet is highly recommended as the BMDS web site will be the official and most current source of updates and notifications. However, those for whom internet access is impractical may obtain a copy of the program via E-mail or CD–ROM by contacting Ms. Diane H. Ray, National Center for Environmental Assessment-RTP Office (MD–52), U.S. Environmental Protection Agency, Research Triangle Park, NC 27711; telephone: 919–541–3637; facsimile: 919–541–1818; E-mail: *ray.diane@epa.gov.*

All comments on the BMDS software, help system and the model source code files are welcome. Please email comments, recommendations, suggested revisions, or corrections to *bmds.ncea@epa.gov.*

FOR FURTHER INFORMATION CONTACT: Dr. Jeffrey S. Gift, National Center for Environmental Assessment-RTP Office (MD–52), U.S. Environmental Protection Agency, Research Triangle Park, NC 27711; telephone: 919–541–4828; facsimile: 919–541–1818; E-mail: *bmds.ncea@epa.gov.*

SUPPLEMENTARY INFORMATION: Use of benchmark dose methods involves fitting mathematical models to dose-response data, obtained primarily from toxicology studies, and using the results to determine the dose of a toxicant that is associated with a predetermined benchmark response, such as a 10% increase in the incidence of a particular lesion or a 10% decrease in body weight gain. BMDS estimates the lower-bound confidence limit on the benchmark dose (BMDL), which can serve as a point of departure for a non-cancer or cancer chemical risk assessment. BMDS facilitates these operations by providing simple data-management tools, a comprehensive help manual and online help system, and an easy-to-use interface to run multiple models on the same dose-response data set. At this time, BMDS (Version 1.2) offers sixteen (16) different models that are appropriate for the analysis of dichotomous (quantal) data (Gamma, Logistic, Log-Logistic, Multistage, Probit, Log-Probit, Quantal-Linear, Quantal-Quadratic, Weibull), continuous data (Linear, Polynomial, Power, Hill) and nested developmental toxicology data (NLogistic, NCTR, Rai & Van Ryzin). Results from all models include a reiteration of the model formula and model run options chosen by the user, goodness-of-fit information, the benchmark dose, and the estimate of the lower-bound confidence limit on the benchmark dose (BMDL). Model results are presented in textual and graphical output files which can be printed or saved and incorporated into other documents.

The software announced here is the result of several years of research and development, expert review and quality assurance testing conducted by NCEA, with support from EPA's National Health and Environmental Effects Research Laboratory and NCEA contractors. Extensive peer review input was also received from expert scientists, particularly toxicologists and statisticians, from both inside and outside the Agency. Following a public review of BMDS Beta Version 1.1b, which ended on March 31, 1999 (63 FR 71465, Dec. 28, 1998), NCEA revised the software based on its experience with the program and in response to public comments received. Finally, an extensive and independent quality assurance assessment of all facets of the BMDS system was conducted, and appropriate modifications were made to create BMDS Version 1.2.

EPA/NCEA will continue to improve the BMDS system in response to the needs of Agency and other risk assessors. One example of such a project is the ongoing development of the EPA Hybrid model, a statistical approach to treating continuous data as dichotomous endpoints. A beta version of the Agency's Hybrid model is included in BMDS Version 1.2. Another example is the ongoing development of a model specifically designed for assessing cancer incidence data, which is being developed to support the proposed EPA cancer guidelines currently in development. As these and other modifications or additions are completed, they will be made available to users of the software via the NCEA BMDS web site.

Currently, the BMDS web site contains the complete BMDS program along with its extensive online help system, a separately downloadable help manual, and background information concerning the development of the software. The executable and source code files for the individual models used by BMDS can also be downloaded from the web site.

Dated: May 25, 2000.

George W. Alapas,

Acting Director, National Center for Environmental Assessment.

[FR Doc. 00–14177 Filed 6–5–00; 8:45 am]

BILLING CODE 6560–50–M

ENVIRONMENTAL PROTECTION AGENCY

[FRL–6711–3]

Science Advisory Board; Notification of Public Advisory Committee Meeting

Pursuant to the Federal Advisory Committee Act, Public Law 92–463, notice is hereby given that the Clean Air Scientific Advisory Committee (CASAC) Technical Subcommittee for Fine Particle Monitoring will meet on Wednesday, June 21, 2000 from 11 am to 2 pm Eastern Daylight Time. The meeting will be coordinated through a conference call connection in Room 6013 in the USEPA, Ariel Rios Building North, 1200 Pennsylvania Avenue, NW, Washington, DC 20460. The public is encouraged to attend the meeting in the conference room noted above. However, the public may also attend through a telephonic link, to the extent that lines are available (phone lines will be very limited). Additional instructions about how to participate in the meeting can be obtained by calling Ms. Diana Pozun prior to the meeting at (202) 564–4544, or via e-mail at <pozun.diana@epa.gov>. *Important Notice:* Documents that are the subject of CASAC reviews are normally available from the originating EPA office and are not available from the CASAC Office—information concerning availability of documents from the relevant Program Office is included below.

Purpose of the Meeting—This technical subcommittee of CASAC was established in 1996 to provide advice and comment to EPA (through CASAC) on appropriate methods and network strategies for monitoring fine particles in the context of implementing the revised national ambient air quality standards (NAAQS) for particulate matter. The Subcommittee provided such advice on the Federal Reference Method (FRM) and mass-based fine particle network in July 1996, and has recently examined EPA's plans and guidance for several components of the fine particle monitoring network and how these components are linked to research priorities for particulate matter (see 65 FR 16916, March 30, 2000 for more details).

In May 2000, Staff from EPA's Office of Research and Development (ORD) requested that CASAC, through its Technical Subcommittee on Fine Particle Monitoring, conduct a peer review of the report prepared in response to Section 6102(e) of the Transportation Equity Act for the 21st Century, which states: *''The Administrator shall conduct a field study of the ability of the PM2.5 Federal Reference Method to differentiate those particles that are larger than 2.5 micrograms [sic] in diameter. This study shall be completed and provided to the Committee on Commerce of the House of Representatives and the Committee on Environment and Public Works of the United States Senate no later than two years from the date of enactment of this Act.''*

Charge to the Subcommittee: ORD has had the draft report reviewed by two external expert reviewers, incorporating their comments prior to submitting the report to the CASAC Subcommittee for a full independent peer review. The Agency has asked that the Subcommittee respond to the following questions: (a) Has the proper methodology been used to address the requirement in the Transportation Equity Act? (b) Was the methodology applied correctly? and (c) Is the Report's interpretation correct? The Subcommittee may also address other issues.

Availability of Review Materials: Single copies of the review document are available from Mr. Frank McElroy, Office of Research and Development (MD–46), U.S. EPA, Research Triangle Park, NC 27711. Mr. McElroy can also be reached by telephone at (919) 541–2622, fax at (919) 541–1153, or e-mail: <mcelroy.frank@epa.gov>. Please ask for: ''*Response to Section 6102(e) of the Transportation Equity Act for the 21st Century''* dated May 2000, EPA 600/R-00/033, prepared by USEPA's National Exposure Research Laboratory (NERL), RTP, NC.

For Further Information: Members of the public desiring additional information about the meeting should contact Mr. Robert Flaak, Designated Federal Officer, Clean Air Scientific Advisory Committee, Science Advisory Board (1400A), Suite 6450, U.S. EPA, 1200 Pennsylvania Avenue, NW, Washington, DC 20460; telephone/voice mail at (202) 564–4546; fax at (202) 501–0582; or via e-mail at <flaak.robert@epa.gov>. A copy of the draft agenda is available from Ms. Diana Pozun at (202) 564–4544 or by FAX at (202) 501–0582 or via e-mail at <pozun.diana@epa.gov>.

Members of the public who wish to make a brief oral presentation to the Subcommittee (in Room 6013 only) must contact Mr. Flaak in writing (by letter or by fax—see previously stated information) no later than 12 noon Eastern Daylight Savings Time, Wednesday, June 14, 2000 in order to be included on the Agenda. Public comments will be limited to five minutes per speaker or organization; 15 minutes total. The request should identify the name of the individual making the presentation, and the organization (if any) they will represent.

Please note: If we receive more requests than we can accommodate, time of receipt in the CASAC office will determine priority, with the first three requests granted time. All others will have to provide written comments. Written comments of any length may be submitted to Mr. Flaak at any time until the date of the meeting. Please provide at least 25 copies. The Science Advisory Board expects that public statements presented at its meetings will not be repetitive of previously submitted oral or written statements.

Individuals requiring special accommodation at this meeting, including wheelchair access to the conference room, should contact Mr. Flaak at least five business days prior to the meeting so that appropriate arrangements can be made.

Dated: May 31, 2000.

Donald G. Barnes,

Staff Director, Science Advisory Board.

[FR Doc. 00–14178 Filed 6–5–00; 8:45 am]

BILLING CODE 6560–50–P

ENVIRONMENTAL PROTECTION AGENCY

[FRL–6709–7]

Guam; Final Program Determination of Adequacy of State Municipal Solid Waste Landfill Permit Program

AGENCY: Environmental Protection Agency (EPA).

ACTION: Notice of final determination of adequacy of Guam's municipal solid waste landfill permit program.

SUMMARY: On August 24, 1998 Guam applied for a determination of adequacy of its municipal solid waste landfill permit program under section 4005 of the Resource Conservation and Recovery Act (RCRA). This section requires States to develop and implement permit programs that ensure that Municipal Solid Waste Landfills (MSWLFs) which may receive hazardous household waste or small quantity generator waste are obligated to comply with the revised Federal MSWLF Criteria (40 CFR part 258). RCRA section 4005(c)(1)(C) requires the Environmental Protection Agency (EPA) to determine whether States have adequate ''permit'' programs for MSWLFs, but does not mandate issuance of a rule for such determination. Guam is identified as a ''State'' in 40 CFR 258.2.

Guam applied for a determination of adequacy under section 4005 of RCRA. EPA reviewed Guam's application and proposed a determination that Guam's MSWLF permit program is adequate to ensure compliance with the revised MSWLF Criteria. Further background on the tentative determination of adequacy appears at 64 FR 54013, Oct. 5, 1999. Along with the tentative determination, EPA announced the availability of the application for public comment. EPA offered to hold a public hearing if a sufficient number of people requested such a hearing. There were no requests for a public hearing, so a hearing was not held. EPA did not receive any comments on Guam's application. Therefore, EPA is today issuing a final determination that the State's program is adequate.

The full Guam application is on file and may be reviewed at the regional EPA office in San Francisco, California or alternatively at the offices of the Guam Environmental Protection Agency, Calibration Laboratory Building, 15–6101 Mariner Avenue, Tiyan, Barrigada, Guam.

Today's action takes effect without further notice in 60 days unless the Agency receives relevant adverse comment or notice that someone intends to submit a relevant adverse comment within 30 days. Should the Agency receive such comments or notice, it will publish a timely notice informing the public that this rule has not taken effect.

FINAL ACTION: Guam is granted full program determination of adequacy for all areas of its municipal solid waste landfill permit program. By this action, EPA is granting Guam full program determination of adequacy for all parts of its municipal solid waste landfill permit program.

EFFECTIVE DATE: The determination of adequacy for Guam shall be June 6, 2000.

FOR FURTHER INFORMATION CONTACT: Ms Heidi Hall, WST–7, U.S. EPA 75 Hawthorne Street, San Francisco, CA 94105, (415) 744–1284.

SUPPLEMENTARY INFORMATION:

Administrative Requirements

A. Executive Order 12866

The Office of Management and Budget has exempted this regulatory action from Executive Order 12866 review.

B. Certification Under the Regulatory Flexibility Act

Pursuant to the provisions of 5 U.S.C. 605(b), I hereby certify that this final approval will not have a significant impact on a substantial number of small entities. It does not impose any new burdens on small entities. This notice, therefore, does not require a regulatory flexibility analysis.

C. Unfunded Mandates Act

Under section 202 of the Unfunded Mandates Reform Act of 1995, EPA must prepare a budgetary impact statement to accompany any proposed or final rule that includes a federal mandate that may result in estimated costs to state or local governments in the aggregate, or to the private sector, or $100 million or more. The EPA has determined that the approval action being promulgated does not include a federal mandate that may result in estimated costs of $100 million or more to either state or local governments in the aggregate, or to the private sector. This federal action approves preexisting requirements under state law, and imposes no new requirements. Accordingly, no additional costs to State or local governments, or to the private sector, result from this action.

D. Executive Order 12875

Executive Order 12875 is intended to develop an effective process to permit elected officials and other representatives of state or local governments to provide meaningful input in the development of regulatory proposals containing significant unfunded mandates. Since this final federal action approves preexisting requirements of state law, no new unfunded mandates result from this action. See also the discussion under C, above, Unfunded Mandates Act.

E. Executive Order 13045

Executive Order 13045, effective April 21, 1997, concerns protection of children from environmental health and safety risks, and applies to regulatory action that is ''economically significant'' in that such action may result in an annual effect on the economy of $100 million or more. The EPA has determined that the approval action being promulgated will not have a significant effect on the economy. This federal action approves preexisting requirements under state law, and imposes no new requirements. Accordingly, Executive Order 13045 does not apply to this action.

F. Congressional Review Act

Under 5 U.S.C. 801(a)(1)(A), as added by the Small Business Regulatory Enforcement Fairness Act of 1996, EPA submitted a report containing this action and other required information to the U.S. Senate, the U.S. House of Representatives and the Comptroller General of the General Accounting Office prior to publication of this action in today's **Federal Register**. This action is not a ''major rule'' as defined by 5 U.S.C. 804(2).

Authority: This notice is issued under the authority of section 4005 of the Solid Waste Disposal Act, as amended, 42 U.S.C. 6946.

Dated: May 23, 2000.

Felicia Marcus,

Regional Administrator, Region IX.

[FR Doc. 00–14179 Filed 6–5–00; 8:45 am]

BILLING CODE 6560–50–P

ENVIRONMENTAL PROTECTION AGENCY

[OPP–30493; FRL–6498–6]

Pesticide Products; Registration Applications

AGENCY: Environmental Protection Agency (EPA).

ACTION: Notice.

SUMMARY: This notice announces receipt of applications to register pesticide products containing new active ingredients not included in any previously registered products pursuant to the provisions of section 3(c)(4) of the Federal Insecticide, Fungicide, and Rodenticide Act (FIFRA), as amended.

DATES: Written comments, identified by the docket control number OPP–30493, must be received on or before July 6, 2000.

ADDRESSES: Comments may be submitted by mail, electronically, or in person. Please follow the detailed instructions for each method as provided in Unit I. of the **SUPPLEMENTARY INFORMATION.** To ensure proper receipt by EPA, it is imperative that you identify docket control number OPP–30493 in the subject line on the first page of your response.

FOR FURTHER INFORMATION CONTACT: By mail: Linda Hollis, Biopesticides and Pollution Prevention Division (7511C), Office of Pesticide Programs, Environmental Protection Agency, Ariel Rios Bldg., 1200 Pennsylvania Ave., NW., Washington, DC 20460. Office location, telephone number, and e-mail address: Rm. 910W49, CM #2, 1921 Jefferson Davis Hwy., Arlington, VA 22202; telephone number: 703–308–8733; e-mail: hollis.linda@epa.gov.

SUPPLEMENTARY INFORMATION:

I. General Information

A. Does This Action Apply to Me?

You may be affected by this action if you are an agricultural producer, food manufacturer, or pesticide manufacturer. Potentially affected categories and entities may include, but are not limited to:

Categories	NAICS codes	Examples of potentially affected entities
Industry	111	Crop production.
	112	Animal production.
	311	Food manufacturing.
	32532	Pesticide manufacturing.

This listing is not intended to be exhaustive, but rather provides a guide for readers regarding entities likely to be affected by this action. Other types of entities not listed in the table could also be affected. The North American Industrial Classification System (NAICS) codes have been provided to assist you and others in determining whether or not this action might apply to certain entities. If you have questions regarding the applicability of this action to a particular entity, consult the person listed under ''FOR FURTHER INFORMATION CONTACT.''

B. How Can I Get Additional Information, Including Copies of This Document and Other Related Documents?

1. *Electronically.* You may obtain electronic copies of this document, and certain other related documents that might be available electronically, from the EPA Internet Home Page at http://www.epa.gov/. To access this document, on the Home Page select ''Laws and Regulations'' and then look up the entry for this document under the ''**Federal Register**—Environmental Documents.'' You can also go directly to the **Federal Register** listings at http://www.epa.gov/fedrgstr/.

2. *In person.* The Agency has established an official record for this action under docket control number OPP–30493. The official record consists of the documents specifically referenced in this action, any public comments received during an applicable comment

period, and other information related to this action, including any information claimed as confidential business information (CBI). This official record includes the documents that are physically located in the docket, as well as the documents that are referenced in those documents. The public version of the official record does not include any information claimed as CBI. The public version of the official record, which includes printed, paper versions of any electronic comments submitted during an applicable comment period, is available for inspection in the Public Information and Records Integrity Branch (PIRIB), Rm. 119, Crystal Mall #2, 1921 Jefferson Davis Hwy., Arlington, VA, from 8:30 a.m. to 4 p.m., Monday through Friday, excluding legal holidays. The PIRIB telephone number is (703) 305–5805.

C. How and to Whom Do I Submit Comments?

You may submit comments through the mail, in person, or electronically. To ensure proper receipt by EPA, it is imperative that you identify docket control number OPP–30493 in the subject line on the first page of your response.

1. *By mail*. Submit your comments to: Public Information and Records Integrity Branch (PIRIB), Information Resources and Services Division (7502C), Office of Pesticide Programs (OPP), Environmental Protection Agency, Ariel Rios Bldg., 1200 Pennsylvania Ave., NW., Washington, DC 20460.

2. *In person or by courier*. Deliver your comments to: Public Information and Records Integrity Branch (PIRIB), Information Resources and Services Division (7502C), Office of Pesticide Programs (OPP), Environmental Protection Agency, Rm. 119, Crystal Mall #2, 1921 Jefferson Davis Highway, Arlington, VA. The PIRIB is open from 8:30 a.m to 4 p.m., Monday through Friday, excluding legal holidays. The PIRIB telephone number is (703) 305–5805.

3. *Electronically*. You may submit your comments electronically by e-mail to: ''opp-docket@epa.gov,'' or you can submit a computer disk as described above. Do not submit any information electronically that you consider to be CBI. Avoid the use of special characters and any form of encryption. Electronic submissions will be accepted in WordPerfect 6.1/8.0 or ASCII file format. All comments in electronic form must be identified by docket control number OPP–30493. Electronic comments may also be filed online at many Federal Depository Libraries.

D. How Should I Handle CBI that I Want to Submit to the Agency?

Do not submit any information electronically that you consider to be CBI. You may claim information that you submit to EPA in response to this document as CBI by marking any part or all of that information as CBI. Information so marked will not be disclosed except in accordance with procedures set forth in 40 CFR part 2. In addition to one complete version of the comment that includes any information claimed as CBI, a copy of the comment that does not contain the information claimed as CBI must be submitted for inclusion in the public version of the official record. Information not marked confidential will be included in the public version of the official record without prior notice. If you have any questions about CBI or the procedures for claiming CBI, please consult the person identified under ''FOR FURTHER INFORMATION CONTACT.''

E. What Should I Consider as I Prepare My Comments for EPA?

You may find the following suggestions helpful for preparing your comments:

1. Explain your views as clearly as possible.

2. Describe any assumptions that you used.

3. Provide copies of any technical information and/or data you used that support your views.

4. If you estimate potential burden or costs, explain how you arrived at the estimate that you provide.

5. Provide specific examples to illustrate your concerns.

6. Offer alternative ways to improve the registration activity.

7. Make sure to submit your comments by the deadline in this notice.

8. To ensure proper receipt by EPA, be sure to identify the docket control number assigned to this action in the subject line on the first page of your response. You may also provide the name, date, and **Federal Register** citation.

II. Registration Applications

EPA received applications as follows to register pesticide products containing active ingredients not included in any previously registered products pursuant to the provision of section 3(c)(4) of FIFRA. Notice of receipt of these applications does not imply a decision by the Agency on the applications.

Products Containing Active Ingredients Not Included in Any Previously Registered Products

1. File Symbol: 72898–E. Applicant: BioTEPP, Inc., 177, 71e Street East, Charlesbourg, QC, Canada G11 1H4. Product Name: Virosoft CP4. Microbial pesticide. Active ingredient: *Cydia pomonella* Granulosis Virus at 0.16%. Proposed classification/Use: For control of the codling moth on apple trees.

2. File Symbol: 72898–R. Applicant: BioTEPP, Inc., 177, 71e Street East, Charlesbourg, QC, Canada G11 1H4. Product Name: Virosoft BA4. Microbial pesticide. Active ingredient: *Mamestra configurata* Nuclearpolyhedrosis Virus at 0.16%. Proposed classification/Use: For control of the berttha armyworm on canola.

Authority: 7 U.S.C. 136.

List of Subjects

Environmental protection, Pesticides and pests.

Dated: May 23, 2000.

Janet L. Andersen,

Director, Biopesticides and Pollution Prevention Division, Office of Pesticide Programs.

[FR Doc. 00–14185 Filed 6–5–00; 8:45 am]

BILLING CODE 6560–50–F

ENVIRONMENTAL PROTECTION AGENCY

[FRL–6709–6]

Policy or Regulatory Flexibility as Incentive for Improved Environmental Performance at Laboratories

AGENCY: Environmental Protection Agency (EPA).

ACTION: Notice; request for information under Project XL and Labs21—Flexibility needs under environmental policies or regulations that affect laboratories.

SUMMARY: EPA solicits information from laboratories on cases where flexibility under environmental policies or regulations could result in improved environmental performance. The Agency will use this information in an assessment of whether to provide flexibility through Project XL to laboratories who participate in the emerging Labs21 program. EPA also seeks candidate laboratories to participate in a pilot project connected with this effort.

DATES: The period for the solicitation is open-ended, although responders are requested to reply by July 6, 2000.

ADDRESSES: Responders to Section IV of this **Federal Register** Notice should

address correspondence to: Nina Bonnelycke, Mail Code 1802, U.S. EPA, Ariel Rios Building, 1200 Pennsylvania Ave., N.W., Washington, D.C. 20460. Responders may also send information via email to *bonnelycke.nina@epa.gov.*

FOR FURTHER INFORMATION CONTACT: For specific information on regulatory relief for laboratories under Project XL or for general information on Project XL, please contact Nina Bonnelycke at the above addresses or at 202–260–3344. For more information on EPA's Labs21 program, please contact Phil Wirdzek at Mail Code 3204, U.S. EPA, Ariel Rios Building, 1200 Pennsylvania Ave., N.W., Washington, D.C. 20460, phone: 202–564–2094, email: *wirdzek.phil@epa.gov.*

SUPPLEMENTARY INFORMATION:

I. Background

Through its Office of Administration and Resources Management, EPA is planning to establish a voluntary initiative to improve laboratory environmental performance through energy- and water-efficiency. This initiative, named Laboratories for the 21st century or Labs21, evolved from the Agency's recent efforts to improve the environmental performance of its own laboratories. As part of developing the Labs21 program, the Agency is exploring what incentives, if any, might prompt laboratories to participate in the new program. Preliminary contacts with industry representatives indicate that regulatory relief from environmental regulations might be one such incentive. Other examples include awards and recognition or data sharing on environmental management practices. Since Project XL is an existing EPA program for providing relief from environmental regulations or programmatic requirements, the Agency is exploring using XL as a way to offer this type of flexibility to Labs21 participants.

II. Labs21 and Project XL

A. Labs21 Overview

EPA recently implemented changes at its Ann Arbor, Michigan, laboratory that will accomplish the following: Reduce annual electricity demand by 68 percent, reduce annual water consumption by 80 percent, produce energy and water savings that will reduce the laboratory's annual utility bill by 74 percent, and recoup the cost of the associated equipment upgrades within 8 years.

The Agency is currently implementing comparable modifications at many of its other laboratories and is expecting similar results. Based on its experience with its own facilities, EPA is exploring whether to develop a national voluntary initiative, referred to as Labs21, to encourage similar improvements at laboratories throughout the U.S.

As part of developing Labs21, EPA held an initial planning meeting on September 9, 1999, to discuss the emerging program with interested parties. (Conference information is available at *http://www.epa.gov/labs21 century.*) At this meeting, EPA presented its first-year objectives for Labs21, which are to: Establish procedures laboratory owners and operators can use to evaluate the energy- and water-efficiency of their laboratories, define the participation requirements for a Labs21 laboratory, provide opportunities to exchange information on laboratory energy- and water-efficiency (e.g., conferences, newsletters, or websites), identify, promote, and replicate demonstration projects to facilitate market acceptance of advanced energy-and water-efficient technologies, and establish award criteria for recognizing Labs21 participants.

EPA is continuing to work with a group of laboratories, including the National Renewable Energy Laboratory and the Lawrence Berkeley National Laboratory to flesh out the program further. Interested parties should contact EPA as indicated above.

B. Project XL Overview

One possible means of adding a flexibility component to Labs21 might be Project XL. Project XL is an existing EPA program specifically designed to offer flexibility on an experimental basis, and it has both a continuing mission and experience in granting flexibility from environmental regulations, including regulations that affect laboratories.

EPA launched Project XL —''eXcellence and Leadership''—on March 16, 1995, as a central part of its effort to reinvent environmental protection. (See 60 FR 27282; May 23, 1995.) Project XL gives individual private and public regulated entities the opportunity to develop their own pilot projects wherein the Agency provides targeted flexibility in exchange for improved environmental performance. EPA intends to use Project XL and other related efforts to test innovative strategies for reducing the regulatory burden and promoting economic growth while achieving better environmental and public health protection. Through this testing, EPA can investigate approaches or legal interpretations that depart from or are even inconsistent with longstanding Agency practices, as long as those interpretations meet the general mandate of the statutes the Agency is charged with implementing.

To participate in XL, interested parties must develop a proposal that satisfies a number of criteria, including criteria for superior environmental performance, transferability, and stakeholder involvement. In the evaluation of environmental performance under XL, EPA seeks superior performance both in areas under existing EPA jurisdiction such as waste handling, air emissions, or effluent treatment, as well as through environmental innovations in fields as diverse as data monitoring and reporting or product stewardship.

As of December 1999, 31 projects have met the XL criteria and are in various stages of development and implementation. Sixteen (16) new proposals are in review. For more information about the XL program, XL criteria, or about specific XL projects underway, please refer to *http://www.epa.gov/projectxl* or contact EPA as indicated above under For Further Information Contact.

C. Existing XL Project Investigates Regulatory Flexibility for Laboratories

The XL program has an existing project, the New England Universities Laboratories XL Project (NE Labs), to replace certain federal and state hazardous waste regulations with an Environmental Management Plan tailored to university labs. (This project is described in more detail on the XL website at *http://www.epa.gov/projectxl/nelabs/index.htm.*)

The conflict for universities that this project works to address is that while hazardous waste regulations are typically directed toward large-scale industrial processes, academic and teaching laboratories typically use only small amounts of hazardous chemicals. This XL project focuses on two specific environmental management problems caused by application of the waste management regulations to university settings: premature hazardous waste determination and inefficient collection of wastes from satellite locations. Premature hazardous waste determination occurs when university workers, in an attempt to adhere to hazardous waste regulations, discard used materials as ''hazardous wastes'' without knowledge of the university's options for recycling and reuse. The result is that the university must dispose of an unnecessarily large volume of reusable materials each year, meaning that the regulations in effect curb the effectiveness of the university's

recycling program. In a similar vein, the 3-day satellite accumulation requirements under hazardous waste management regulations force university environmental managers to pick up and transport wastes on a frequent but unpredictable basis. The XL project gives participating universities the latitude to explore how to replace the broad-brush hazardous waste regulations that cause these inefficiencies with a more targeted, effective environmental management system.

It is this type of tradeoff between regulatory relief and improved environmental performance that the Agency hopes to capture in the Labs21 program, and EPA's expectation is that the experience the XL program has gained through running the NE Labs XL project and other similar projects can assist EPA in structuring a flexibility component for Labs21.

III. Definition of ''Laboratory''

For purposes of this **Federal Register** notice, the term ''laboratory'' includes research, academic or industrial laboratories. This definition extends to facilities that generate product in commercial quantities in addition to facilities whose principal output is research, analysis, or products manufactured for R&D or other investigatory purposes.

IV. Information Sought By EPA

A. Types of Flexibility Needed By Laboratories

In today's notice, EPA is asking laboratories to identify specific examples of environmental regulations or policies under which the benefit to the environment appears to be small compared to the implementation burden faced by the affected lab. The previous section describes a case where university laboratories felt they could obtain superior environmental performance by implementing their own environmental control plan instead of continuing compliance with existing hazardous waste regulations. Other examples may exist, for instance, there may be air emission or water treatment standards that, for whatever reason, fail to achieve their environmental objectives when applied to laboratory settings. The Agency will use feedback received through this Notice to guide its assessment of whether to offer a flexibility component in the new Labs21 program.

In addition, the Agency today is asking laboratories to identify any regulations or policies issued by other federal agencies where the benefit to the environment appears to be small compared to the implementation burden faced by the affected lab. Examples of federal agencies with jurisdiction over laboratories' environmental performance include the Food and Drug Administration or the Department of Transportation. The feedback EPA receives will help the Agency assess the need to coordinate with other federal agencies regarding flexibility for laboratories.

B. Laboratories Interested in Participating in a Pilot Project

Through today's notice, EPA requests contact with laboratories that want to participate in an XL project to grant flexibility as part of the Labs21 program. These candidates, referred to as ''sponsors'' under XL, should be interested in obtaining regulatory or programmatic flexibility for their lab, should have some specific ideas concerning requirements that EPA should consider waiving, or should have broad knowledge of the regulatory obstacles to environmental performance that laboratories face.

Through participating, sponsors will not only have a chance to secure regulatory or programmatic relief for their facilities, but will also have an opportunity to shape the dialogue between laboratories and EPA on how to maximize environmental performance at labs.

Dated: May 22, 2000.

Jay Benforado,

Acting Associate Administrator, Office of Policy and Reinvention.

[FR Doc. 00–14183 Filed 6–5–00; 8:45 am]

BILLING CODE 6560–50–P

EQUAL EMPLOYMENT OPPORTUNITY COMMISSION

RIN 3046–AA58

Agency Information Collection Activities: Submission for OMB Review

AGENCY: Equal Employment Opportunity Commission.

ACTION: Final notice of submission for OMB review.

SUMMARY: In accordance with the Paperwork Reduction Act of 1995, the Equal Employment Opportunity Commission (EEOC) hereby gives notice that it has submitted to the Office of Management and Budget (OMB) a request for an extension of the existing collection requirements under 29 CFR 1625.22, Waivers of rights and claims under the ADEA. The Commission has requested an extension of an existing collection as listed below.

DATES: Written comments on this notice must be submitted on or before July 6, 2000.

ADDRESSES: The Request for Clearance (SF 83–I), supporting statement, and other documents submitted to OMB for review may be obtained from: Sherman McDaniel, Jr., EEOC Clearance Officer, 1801 L St., NW., Washington, DC 20507. Send comments regarding any aspect of the information collection to Frances M. Hart, Executive Officer, Executive Secretariat, Equal Employment Opportunity Commission, 10th Floor, 1801 L Street, NW., Washington, DC 20507, and to the Office of Information and Regulatory Affairs, Attention: Danny Werfel, Desk Officer for the U.S. Equal Employment Opportunity Commission, Office of Management and Budget, 725 17th Street, NW., Room 10235, New Executive Office Building, Washington, DC 20503. Comments may be electronically mailed to DWERFEL@OMB.EOP.GOV.

FOR FURTHER INFORMATION CONTACT: Joseph N. Cleary, Assistant Legal Counsel, Office of Legal Counsel, at (202) 663–4647 or TTY (202) 663–7026. This notice is also available in the following formats: large print, braille, audio tape and electronic file on computer disk. Requests for this notice in an alternative format should be made to the Publications Center at 1–800–669–3362.

SUPPLEMENTARY INFORMATION: The Equal Employment Opportunity Commission (EEOC) enforces the ADEA of 1967, as amended, 29 U.S.C. 621 *et seq.*, which prohibits discrimination against employees and applicants for employment who are age 40 or older. Congress amended the ADEA by enacting the Older Workers Benefit Protection Act of 1990 (OWBPA), Public Law 101–433, 104 Stat. 983 (1990), to clarify the prohibitions against discrimination on the basis of age. In Title II of OWBPA, Congress addressed waivers of rights and claims under the ADEA, amending section 7 of the ADEA by adding a new subsection (f), 29 U.S.C. 626(f). The provisions of Title II of OWBPA do require employers to provide certain information to employees (but not to EEOC) in writing. The regulation at 29 CFR 1625.22 reiterates those requirements.

The EEOC seeks extension without change of the information collection requirements contained in this recordkeeping regulation. On March 24, 2000, the Commission published a 60–Day Notice informing the public of its intent to request an extension of the

informational requirements from the Office of Management and Budget. 65 FR 15907. No comments were received.

Collection Title: Informational requirements under Title II of the Older Workers Benefit Protection Act of 1990 (OWBPA), 29 CFR Part 1625.

Form Number: None.

Frequency of Report: None required.

OMB Control No.: 3046–0042.

Type of Respondent: Business, state or local governments, not for profit institutions.

Description of the Affected Public: Any employer with 20 or more employees that seeks waiver agreements in connection with exit incentive or other employment termination programs.

Responses: 13,713.

Reporting Hours: 41,139.

Number of Forms: None.

Abstract: This requirement does not involve record keeping. It consists of providing adequate information in waiver agreements offered to a group or class of persons in connection with a Program, to satisfy the requirements of the OWBPA.

Burden Statement: There is no reporting requirement nor additional record keeping associated with this rule. The only paperwork burden involved is the inclusion of the relevant data in waiver agreements. The rule applies only to those employers who have 20 or more employees and who offer waivers to a group or class of employees in connection with a Program.

Dated: May 31, 2000.

For the Commission.

Ida L. Castro,

Chairwoman.

[FR Doc. 00–14104 Filed 6–5–00; 8:45 am]

BILLING CODE 6570–01–P

EQUAL EMPLOYMENT OPPORTUNITY COMMISSION

RIN 3046–AA45

Agency Information Collection Activities: Submission for OMB Review

AGENCY: Equal Employment Opportunity Commission.

ACTION: Final notice of submission for OMB review.

SUMMARY: In accordance with the Paperwork Reduction Act of 1995, the Equal Employment Opportunity Commission (EEOC) hereby gives notice that it has submitted to the Office of Management and Budget (OMB) a request for an extension of the existing collection requirements under 29 CFR 1602, Recordkeeping and Reporting Requirements under Title VII and the ADA. The Commission has requested an extension of an existing collection as listed below.

DATES: Written comments on this final notice must be submitted on or before July 6, 2000.

ADDRESSES: The Request for Clearance (SF 83–I), supporting statement, and other documents submitted to OMB for review may be obtained from: Sherman McDaniel, Jr., EEOC Clearance Officer, 1801 L Street, NW, Washington, DC 20507. Send comments regarding any aspect of the information collection to Frances M. Hart, Executive Officer, Executive Secretariat, Equal Employment Opportunity Commission, 10th Floor, 1801 L Street, NW, Washington, DC 20507 and to the Office of Information and Regulatory Affairs, Attention: Danny Werfel, Desk Officer for the U.S. Equal Employment Opportunity Commission, Office of Management and Budget, 725 17th Street, NW, Room 10235, New Executive Office Building, Washington, DC 20503 or electronically mailed to DWERFEL@OMB.EOP.GOV.

FOR FURTHER INFORMATION CONTACT: Nicholas M. Inzeo, Deputy Legal Counsel, Thomas J. Schlageter, Assistant Legal Counsel, or Stephanie D. Garner, Senior Attorney, at (202) 663–4670 or TDD (202) 663–7026. This notice is also available in the following formats: large print, braille, audio tape and electronic file on computer disk. Requests for this notice in an alternative format should be made to the Publications Center at 1–800–669–3362.

SUPPLEMENTARY INFORMATION: A notice that EEOC would be submitting this request was published in the **Federal Register** on March 21, 2000, allowing for a 60-day public comment period. No commentators responded.

Type of Review: Extension—No change.

Collection Title: Recordkeeping and Reporting under Title VII and the ADA.

Form No.: None.

Frequency of Report: Other.

Type of Respondent: Employers with 15 or more employees.

Description of Affected Public: Employers with 15 or more employees are subject to Title VII and the ADA.

Responses: 627,000.

Reporting Hours: None.

Federal Cost: None.

Number of Forms: None.

Abstract: Section 709 of Title VII, 42 U.S.C. 2000e and section 107(a) of the ADA, 42 U.S.C. 12117 require the Commission to establish regulations pursuant to which employers subject to those Acts shall make and preserve certain records to assist the EEOC in assuring compliance with the Acts' nondiscrimination requirements in employment.

This is a recordkeeping requirement. Any of the records maintained which are subsequently disclosed to the EEOC during an investigation are protected from public disclosure by the confidentiality provisions of section 706(b) and 709(e) of Title VII, by incorporation, section 107(a) of the ADA.

Burden Statement: The EEOC estimates that there will be no increased burden on employers. All employers subject to Title VII are also subject to the ADA, and the same EEOC records retention requirements are applicable to both. As all employers with 15 or more employees are already required by the EEOC's Title VII regulations on recordkeeping to maintain the same records, and the extension does not require reports or the creation or maintenance of new documents, there is no increased burden.

Dated: May 1, 2000.

For the Commission.

Ida L. Castro,

Chairwoman.

[FR Doc. 00–14105 Filed 6–5–00; 8:45 am]

BILLING CODE 6750–01–P

FEDERAL COMMUNICATIONS COMMISSION

[CC Docket No. 92–237; DA 00–1219]

Next Meeting of the North American Numbering Council

AGENCY: Federal Communications Commission.

ACTION: Notice.

SUMMARY: On June 2, 2000, the Commission released a public notice announcing the June 20 and 21, 2000, meeting and agenda of the North American Numbering Council (NANC). The intended effect of this action is to make the public aware of the NANC's next meeting and its agenda.

FOR FURTHER INFORMATION CONTACT: Jeannie Grimes at (202) 418–2320 or jgrimes@fcc.gov. The address is: Network Services Division, Common Carrier Bureau, Federal Communications Commission, The Portals, 445 12th Street, SW, Suite 6A320, Washington, DC 20554. The fax number is: (202) 418–2345. The TTY number is: (202) 418–0484.

SUPPLEMENTARY INFORMATION: Released: June 2, 2000.

The North American Numbering Council (NANC) has scheduled a meeting to be held Tuesday, June 20, 2000, from 8:30 a.m. until 5:00 p.m., and on Wednesday, June 21, from 8:30 a.m. until 12 noon. The meeting will be held at the Federal Communications Commission, Portals II, 445 12th Street, SW, Room TW-C305, Washington, DC.

This meeting is open to members of the general public. The FCC will attempt to accommodate as many participants as possible. The public may submit written statements to the NANC, which must be received two business days before the meeting. In addition, oral statements at the meeting by parties or entities not represented on the NANC will be permitted to the extent time permits. Such statements will be limited to five minutes in length by any one party or entity, and requests to make an oral statement must be received two business days before the meeting. Requests to make an oral statement or provide written comments to the NANC should be sent to Jeannie Grimes at the address under **FOR FURTHER INFORMATION CONTACT,** stated above.

Proposed Agenda—Tuesday, June 20, 2000

1. Approval of May 23–24, 2000 meeting minutes.
2. North American Numbering Plan Administration (NANPA) Report. Status of reporting form, and data entry mechanisms (Numbering Resource Optimization *Report and Order* (*NRO R&O*), CC Docket 99–200, paragraphs 52 and 53); NANP exhaust (without pooling) projections.
3. North American Numbering Plan Administration (NANPA) Oversight Working Group Report.
4. Numbering Resource Optimization (NRO) Working Group Report. NARUC review of Uniform Definitions (*NRO R&O* paragraphs 14 and 36); status of UNP impact (paragraph 231), and status of fees for reserved numbers (paragraph 25).
5. Industry Numbering Committee (INC) Report. Status of Thousand Block Pooling Administrator guidelines.
6. Ad Hoc Voluntary UNP Study Group Report. Status of Business Rule Model.
7. Local Number Portability Administration (LNPA) Working Group Report. Wireless Number Portability Subcommittee report, and updates on Wireless Wireline Integration; Problem Identification Management (PIM); NPAC/SMS release status, and Slow Horse.
8. Number Pooling Issue Management Group (IMG) Report. Update on development of thousands-block pooling administration technical requirements (*NRO R&O* paragraph 155).
9. Limited Liability Corporations (LLCs) and Number Portability Administration Centers (NPAC) activity update
10. North American Billing and Collection update. Wednesday, June 24, 2000
11. Steering Group Report.
12. Presentation by U S West on new NANP Expansion recommendation.
13. Cost Recovery Working Group Report. Confirm appointment of co-chair.
14. NANC Discussion Group on charging for telephone numbers. Status of pricing comments and replies (*NRO R&O* paragraph 251).
15. Discussion of proposed assignment to a NANC Issue Management Group to examine numbering resource demand from new services (*e.g.*, unified messaging services).
16. Public participation (5 minutes each, if any).
17. Other Business.
18. Action Items and Decisions Reached.

Federal Communications Commission.

Diane Griffin Harmon,

Deputy Chief, Network Services Division, Common Carrier Bureau.

[FR Doc. 00–14282 Filed 6–5–00; 8:45 am]

BILLING CODE 6712–01–P

FEDERAL COMMUNICATIONS COMMISSION

Sunshine Act Meeting

June 1, 2000.

Open Commission Meeting, Thursday, June 8, 2000

The Federal Communications Commission will hold an Open Meeting on the subjects listed below on Thursday, June 8, 2000, which is scheduled to commence at 9:30 a.m. in Room TW–C305, at 445 12th Street, SW, Washington, DC.

Item No., Bureau, and Subject

1—Office of General Counsel—Title: Statement of Policy on Establishing a Government-to-Government Relationship with Indian Tribes. Summary: The Commission will consider a Statement of Policy reaffirming the Commission's commitment to the principles of Indian sovereignty and the federal trust responsibility.

2—Common Carrier—Title: Federal-State Joint Board on Universal Service; Promoting Deployment and Subscribership in Unserved and Underserved Areas, Including Tribal and Insular Areas (CC Docket No. 96–45); and Western Wireless Corporation, Crow Reservation in Montana; Smith Bagley, Inc.; Cheyenne River Sioux Tribe Telephone Authority; Western Wireless Corporation, Wyoming; Cellco Partnership d/b/a Bell Atlantic Mobile, Inc.; Petitions for Designation as an Eligible Telecommunications Carrier and for Related Waivers to Provide Universal Service. Summary: The Commission will consider a 12th Report and Order and Memorandum Opinion and Order that addresses access to telephone service within American Indian and Alaska Native tribal communities and the Commission's jurisdiction under Section 214 of the Communications Act of 1934.

3—Wireless Telecommunications—Title: Extending Wireless Telecommunications Services to Tribal Lands (WT Docket No. 99–266). Summary: The Commission will consider a Report and Order and Further Notice of Proposed Rule Making aimed at expanding wireless services on tribal lands.

4—International—Title: Review of Commission Consideration of Applications under the Cable Landing License Act. Summary: The Commission will consider a Notice of Proposed Rule Making concerning proposals to streamline the Commission's process for licensing submarine cables.

5—Office of Engineering and Technology—Title: Amendment of Parts 2 and 95 of the Commission's Rules to Create a Wireless Medical Telemetry Service (ET Docket No. 99–255 and PR Docket No. 92–235). Summary: The Commission will consider a Report and Order to allocate spectrum on a primary basis for medical telemetry equipment, and to establish rules for a new wireless medical telemetry service.

Additional information concerning this meeting may be obtained from Maureen Peratino or Davis Fiske, Office of Media Relations, telephone number (202) 418–0500; TTY (202) 418–2555.

Copies of materials adopted at this meeting can be purchased from the FCC's duplicating contractor, International Transcription Services, Inc. (ITS, Inc.) at (202) 857–3800; fax (202) 857–3805 and 857–3184; or TTY (202) 293–8810. These copies are available in paper format and alternate media, including large print/type; digital disk; and audio tape. ITS may be reached by e-mail: its_inc@ix.netcom.com. Their Internet address is http://www.itsdocs.com/.

This meeting can be viewed over George Mason University's Capitol Connection. The Capitol Connection also will carry the meeting live via the Internet. For information on these services call (703) 993–3100. The audio portion of the meeting will be broadcast live on the Internet via the FCC's Internet audio broadcast page at <http://www.fcc.gov/realaudio/>. The meeting can also be heard via telephone,

a fee, from National Narrowcast Network, telephone (202) 966–2211 or fax (202) 966–1770. Audio and video tapes of this meeting can be purchased from Infocus, 341 Victory Drive, Herndon, VA 20179, telephone (703) 834–0100; fax number (703) 834–0111.

Federal Communications Commission.

Magaline Roman Salas,

Secretary.

[FR Doc. 00–14283 Filed 6–2–00; 8:45 am]

BILLING CODE 6712–01–M

FEDERAL DEPOSIT INSURANCE CORPORATION

Sunshine Act Meeting; Notice of Agency Meeting

Pursuant to the provisions of the ''Government in the Sunshine Act'' (5 U.S.C. 552b), notice is hereby given that at 10:30 a.m. on Tuesday, June 6, 2000, the Federal Deposit Insurance Corporation's Board of Directors will meet in closed session, pursuant to sections 552b(c)(2), (c)(6), (c)(8), (c)(9)(A)(ii), and (c)(9)(B) of Title 5, United States Code, to consider matters relating to the Corporation's supervisory, corporate, and resolution activities.

The meeting will be held in the Board Room on the sixth floor of the FDIC Building located at 550 17th Street, NW., Washington, DC.

Requests for further information concerning the meeting may be directed to Mr. Robert E. Feldman, Executive Secretary of the Corporation, at (202) 898–6757.

Dated: June 3, 2000.

Federal Deposit Insurance Corporation.

Robert E. Feldman,

Executive Secretary.

[FR Doc. 00–14365 Filed 6–2–00; 3:51 pm]

BILLING CODE 6714–01–M

FEDERAL RESERVE SYSTEM

Agency Information Collection Activities: Proposed Collection; Comment Request

AGENCY: Board of Governors of the Federal Reserve System.

SUMMARY:

Background

On June 15, 1984, the Office of Management and Budget (OMB) delegated to the Board of Governors of the Federal Reserve System (Board) its approval authority under the Paperwork Reduction Act, as per 5 CFR 1320.16, to approve of and assign OMB control numbers to collection of information requests and requirements conducted or sponsored by the Board under conditions set forth in 5 CFR 1320 Appendix A.1. Board-approved collections of information are incorporated into the official OMB inventory of currently approved collections of information. Copies of the OMB 83-Is and supporting statements and approved collection of information instruments are placed into OMB's public docket files. The Federal Reserve may not conduct or sponsor, and the respondent is not required to respond to, an information collection that has been extended, revised, or implemented on or after October 1, 1995, unless it displays a currently valid OMB control number.

Request for Comment on Information Collection Proposals

The following information collections, which are being handled under this delegated authority, have received initial Board approval and are hereby published for comment. At the end of the comment period, the proposed information collections, along with an analysis of comments and recommendations received, will be submitted to the Board for final approval under OMB delegated authority. Comments are invited on the following:

a. Whether the proposed collection of information is necessary for the proper performance of the Federal Reserve's functions; including whether the information has practical utility;

b. The accuracy of the Federal Reserve's estimate of the burden of the proposed information collection, including the validity of the methodology and assumptions used;

c. Ways to enhance the quality, utility, and clarity of the information to be collected; and

d. Ways to minimize the burden of information collection on respondents, including through the use of automated collection techniques or other forms of information technology.

DATES: Comments must be submitted on or before August 7, 2000.

ADDRESSES: Comments, which should refer to the OMB control number or agency form number, should be addressed to Jennifer J. Johnson, Secretary, Board of Governors of the Federal Reserve System, 20th and C Streets, NW., Washington, DC 20551, or mailed electronically to regs.comments@federalreserve.gov. Comments addressed to Ms. Johnson also may be delivered to the Board's mail room between 8:45 a.m. and 5:15 p.m., and to the security control room outside of those hours. Both the mail room and the security control room are accessible from the courtyard entrance on 20th Street between Constitution Avenue and C Street, NW. Comments received may be inspected in room M–P–500 between 9:00 a.m. and 5:00 p.m., except as provided in section 261.14 of the Board's Rules Regarding Availability of Information, 12 CFR 261.14(a).

A copy of the comments may also be submitted to the OMB desk officer for the Board: Alexander T. Hunt, Office of Information and Regulatory Affairs, Office of Management and Budget, New Executive Office Building, Room 3208, Washington, DC 20503.

FOR FURTHER INFORMATION CONTACT: A copy of the proposed form and instructions, the Paperwork Reduction Act Submission (OMB 83–I), supporting statement, and other documents that will be placed into OMB's public docket files once approved may be requested from the agency clearance officer, whose name appears below. Mary M. West, Federal Reserve Board Clearance Officer (202–452–3829), Division of Research and Statistics, Board of Governors of the Federal Reserve System, Washington, DC 20551. Telecommunications Device for the Deaf (TDD) users may contact Diane Jenkins, (202–452–3544), Board of Governors of the Federal Reserve System, Washington, DC 20551.

Proposal To Approve Under OMB Delegated Authority the Extension for Three Years, With Revision, of the Following Report

Report title: The Bank Holding Company Report of Insured Depository Institutions' Section 23A Transactions with Affiliates.

Agency form number: FR Y–8.

OMB control number: 7100–0126.

Frequency: Quarterly.

Reporters: Bank holding companies, financial holding companies, foreign banking organizations.

Annual reporting hours: 169,661 hours.

Estimated average hours per response: 7.2 hours.

Number of respondents: 5,891.

Small businesses are not affected.

General description of report: This information collection is authorized by section 5(c) of the Bank Holding Company Act (12 U.S.C. 1844 (c)) and section 225.5 (b) of Regulation Y (12 CFR 225.5 (b)) and is given confidential treatment pursuant to the Freedom of Information Act (5 U.S.C. 552 (b)(4) and (8)).

Abstract: The current FR Y–8 collects information on the movement of funds

between a domestic bank holding company and its subsidiaries in order to identify broad categories of intercompany transactions and balances that may affect the financial condition of the subsidiary bank. The report also collects information on income recognized by subsidiary banks from other bank holding company members as well as information on credit extended by subsidiary banks to other bank holding company members. Domestic top-tier bank holding companies with assets of $300 million or more are required to file the FR Y–8 on a semiannual basis (June and December). Also, interim reporting is currently required within ten calendar days of certain large asset transfers.

Current actions: On May 19, 2000, a **Federal Register** notice (65 FR 31912) was issued for public comment to completely revise the FR Y–8. The Federal Reserve proposed to delete the current information on the FR Y–8 and collect fourteen items of information on Section 23A covered transactions. The Federal Reserve is now amending this **Federal Register** notice, with regard to the FR Y–8 respondent panel, to include foreign banking organizations that directly own U.S. subsidiary banks. The comment period on the May 19, 2000, notice is extended to August 7, 2000. The Federal Reserve proposes, at the same time, to discontinue the Report of Intercompany Transactions for Foreign Banking Organizations and Their U.S. Bank Subsidiaries (FR Y–8f; OMB. 7100–0127). The majority of the FR Y–8f respondents (foreign banking organizations that own U.S. bank subsidiaries through a domestic bank holding company) are included in the FR Y–8 panel proposed in the May 19 **Federal Register** notice; this amendment includes the remaining 22 foreign banking organizations (that directly own U.S. banks) in the respondent panel.

Discontinuance of the Following Report Under OMB Delegated Authority

Report title: Report of Intercompany Transactions for Foreign Banking Organizations and their U.S. Bank Subsidiaries.

Agency form number: FR Y–8f.

OMB control number: 7100–0127.

Frequency: Semi-annually, and interim reporting required for certain large asset transfers.

Reporters: Bank holding companies as defined by Section 2(a) of the Bank Holding Company Act with at least $300 million in total consolidated assets that are organized under the laws of a foreign country and principally engaged in banking outside the United States.

Annual reporting hours: 360.

Estimated average hours per response: 3.

Number of respondents: 58. semiannual respondents; 4 interim respondents Small businesses are not affected.

General description of report: This information collection is authorized by section 5(c) of the Bank Holding Company Act (12 U.S.C. 1844 (c)) and section 225.5 (b) of Regulation Y (12 CFR 225.5 (b)) and is given confidential treatment pursuant to the Freedom of Information Act (5 U.S.C. 552 (b)(8)).

Abstract: This report provides the Federal Reserve System with information on intercompany transactions between foreign banking organizations and their U.S. bank subsidiaries. It enables the Federal Reserve to monitor and supervise intercompany flows of funds to ensure that U.S. subsidiary banks are not engaging in any unsafe and unsound practices with their foreign owners. This report supplements the Board's global framework for the supervision of the U.S. operations of foreign banks. In addition, it aids in determining whether a foreign banking organization serves as a source of strength to its U.S. subsidiary.

Current Actions: On May 19, 2000, a **Federal Register** notice (65 FR 31912) was issued for public comment to completely revise The Bank Holding Company Report of Insured Depository Institutions' Section 23A Transactions with Affiliates (FR Y–8), which is filed by domestic top-tier bank holding companies. The Federal Reserve now proposes to have foreign banking organizations that directly own U.S. subsidiary banks also file the revised FR Y–8. The comment period on the May 19, 2000, notice is extended to August 7, 2000. If this change to the reporting panel is adopted, the Federal Reserve will, at the same time, discontinue the FR Y–8f.

Board of Governors of the Federal Reserve System, May 31, 2000.

Robert deV. Frierson,

Associate Secretary of the Board.

[FR Doc. 00–14069 Filed 6–5–00; 8:45 am]

BILLING CODE 6210–01–P

FEDERAL RESERVE SYSTEM

Formations of, Acquisitions by, and Mergers of Bank Holding Companies

The companies listed in this notice have applied to the Board for approval, pursuant to the Bank Holding Company Act of 1956 (12 U.S.C. 1841 *et seq.*) (BHC Act), Regulation Y (12 CFR part 225), and all other applicable statutes and regulations to become a bank holding company and/or to acquire the assets or the ownership of, control of, or the power to vote shares of a bank or bank holding company and all of the banks and nonbanking companies owned by the bank holding company, including the companies listed below.

The applications listed below, as well as other related filings required by the Board, are available for immediate inspection at the Federal Reserve Bank indicated. The application also will be available for inspection at the offices of the Board of Governors. Interested persons may express their views in writing on the standards enumerated in the BHC Act (12 U.S.C. 1842(c)). If the proposal also involves the acquisition of a nonbanking company, the review also includes whether the acquisition of the nonbanking company complies with the standards in section 4 of the BHC Act (12 U.S.C. 1843). Unless otherwise noted, nonbanking activities will be conducted throughout the United States. Additional information on all bank holding companies may be obtained from the National Information Center website at www.ffiec.gov/nic/.

Unless otherwise noted, comments regarding each of these applications must be received at the Reserve Bank indicated or the offices of the Board of Governors not later than June 30, 2000.

A. Federal Reserve Bank of Kansas City (D. Michael Manies, Assistant Vice President) 925 Grand Avenue, Kansas City, Missouri 64198–0001:

1. BancFirst Corporation, Oklahoma City, Oklahoma; to merge with First Southwest Corporation, Frederick, Oklahoma, and thereby indirectly acquire First Southwest Bank, Frederick, Oklahoma.

Board of Governors of the Federal Reserve System, May 31, 2000.

Robert deV. Frierson,

Associate Secretary of the Board.

[FR Doc. 00–14070 Filed 6–5–00; 8:45 am]

BILLING CODE 6210–01–P

FEDERAL TRADE COMMISSION

[File No. 002 3082]

Zim Textile Corporation; Analysis To Aid Public Comment

AGENCY: Federal Trade Commission.

ACTION: Proposed consent agreement

SUMMARY: The consent agreement in this matter settles alleged violations of federal law prohibiting unfair or deceptive acts or practices or unfair methods of competition. The attached

Analysis to Aid Public Comment describes both the allegations in the draft complaint that accompanies the consent agreement and the terms of the consent order—embodied in the consent agreement—that would settle these allegations.

DATES: Comments must be received on or before June 26, 2000.

ADDRESSES: Comments should be directed to: FTC/Office of the Secretary, Room 159, 600 Pennsylvania Ave., NW, Washington, D.C. 20580.

FOR FURTHER INFORMATION CONTACT: Carol Jennings or Elaine Kolish, FTC/S–4631, 600 Pennsylvania Ave., NW, Washington, D.C. 20580. (202) 326–3010 or 326–3042.

SUPPLEMENTARY INFORMATION: Pursuant to Section 6(f) of the Federal Trade Commission Act, 38 Stat. 721, 15 U.S.C. 46 and Section 2.34 of the Commission's Rules of Practice (16 CFR 2.34), notice is hereby given that the above-captioned consent agreement containing a consent order to cease and desist, having been filed with the accepted, subject to final approval, by the Commission, has been placed on the public record for a period of thirty (30) days. The following Analysis to Aid Public Comment describes the terms of the consent agreement, and the allegations in the complaint. An electronic copy of the full text of the consent agreement package can be obtained from the FTC Home Page (for May 26, 2000), on the World Wide Web, at ''http://www.ftc.gov/ftc/formal.htm.'' A paper copy can be obtained from the FTC Public Reference Room, Room H–130, 600 Pennsylvania Avenue, NW, Washington, D.C. 20580, either in person or by calling (202) 326–3627.

Public comment is invited. Comments should be directed: FTC/Office of the Secretary, Room 159, 600 Pennsylvania Ave., Washington, D.C. 20580. Two paper copies of each comment should be filed, and should be accompanied, if possible, by a 3½ inch diskette containing an electronic copy of the comment. Such comments or views will be considered by the Commission and will be available for inspection and copying at its principal office in accordance with Section 4.9(b)(6)(ii) of the Commission's Rules of Practice (16 CFR 4.9(b)(6)(ii)).

Analysis of Proposed Consent Order To Aid Public Comment

The Federal Trade Commission has accepted, subject to final approval, an agreement to a proposed consent order from respondent Zim Textile Corporation.

The proposed consent orders has been placed on the public record for thirty (30) days for reception of comments by interested persons. Comments received during this period will become part of the public record. After thirty (30) days, the Commission will again review the agreement and the comments received and will decide whether it should withdraw from the agreement and take other appropriate action or make final the agreement's proposed order.

This matter concerns practices related to the manufacture, sale, and distribution of household textile products. The Commission's complaint charges that respondent violated the Federal Trade Commission Act, 15 U.S.C. 41 *et seq.*, and the Textile Fiber Products Identification Act, 15 U.S.C. 70 *et seq.*, by offering for sale and selling household textile products without disclosing on a tag or label affixed to each such product the fiber content, the manufacturer or dealer identity, and the country of origin.

Part I of the proposed consent order prohibits future violations of the Textile Fiber Products Identification Act and Commission rules and regulations, found at 16 CFR part 303, implementing the requirements of the statute.

Part II of the proposed order requires the respondent, for three years after the date of issuance of the order, to maintain records demonstrating compliance with the order.

Part III of the proposed order requires the respondent to distribute copies of the order to certain company officials and employees. Part IV of the proposed order requires the respondent to notify the Commission of any change in the corporation that may affect compliance obligations under the order. Part V of the proposed order requires the respondent to file one or more compliance reports. Part VI of the proposed order is a provision whereby the order, absent certain circumstances, terminates twenty years from the date of issuance.

The purpose of this analysis is to facilitate public comment on the proposed consent order. It is not intended to constitute an official interpretation of the agreement and proposed order or to modify in any way their terms.

By direction of the Commission.

Donald S. Clark,

Secretary.

[FR Doc. 00–14146 Filed 6–5–00; 8:45 am]

BILLING CODE 6750–01–M

GENERAL ACCOUNTING OFFICE

Appointments to the Medicare Payment Advisory Commission

AGENCY: General Accounting Office (GAO).

ACTION: Notice of appointments.

SUMMARY: The Balanced Budget Act of 1997 established the Medicare Payment Advisory Commission (MedPAC) and gave the Comptroller General responsibility for appointing its members. This notice announces six appointments to fill the vacancies occurring this year.

DATES: Appointments are effective May 1, 2000 through April 30, 2003.

ADDRESSES:

GAO: 441 G Street, NW, Washington, DC 20548

MedPAC: 1730 K Street, NW, Suite 800, Washington, DC 20006

FOR FURTHER INFORMATION CONTACT:

GAO: Molly Ryan, 202/512–3592

MedPAC: Murray N. Ross, Ph.D., 202/653–7220

SUPPLEMENTARY INFORMATION: To fill this year's vacancies I am announcing the following MedPAC appointments:

Autry O.V. ''Pete'' DeBusk; Glenn M. Hackbarth; Alan R. Nelson; Robert D. Reischauer; David A. Smith; and Ray E. Stowers

(Sec. 4022, Pub. L. 105–33, 111 Stat. 251, 350)

David M. Walker,

Comptroller General of the United States.

[FR Doc. 00–14068 Filed 6–5–00; 8:45 am]

BILLING CODE 1610–02–M

DEPARTMENT OF HEALTH AND HUMAN SERVICES

National Committee on Vital and Health Statistics: Meeting

Pursuant to the Federal Advisory Committee Act, the Department of Health and Human Services announces the following advisory committee meeting.

Name: National Committee on Vital and Health Statistics (NCVHS).

Time and Date: Tuesday, June 20, 2000, 9 a.m.–Noon EDT; Wednesday, June 21, 2000, 9:15 a.m.–5:00 p.m. EDT.

Place: Hubert H. Humphrey Building, Conference Room 705A, 200 Independence Avenue S.W., Washington, DC.

Status: Open.

Purpose: On the first day of this two day meeting, the full Committee will discuss the draft Report on Uniform Data Standards for Patient Medical Record Information as prepared by the Subcommittee on Standards

and Security. They will then hear a presentation on a National Research Council report entitled: Networking Health: Prescriptions for the Internet. On the second day the Committee will hear updates on a variety of topics from staff of the Department of Health and Human Services and a presentation on digital signatures. The afternoon's agenda will consist of Subcommittee working sessions and followed by status reports from the Subcommittees to the full Committee.

Notice: In the interest of security, the Department has instituted stringent procedures for entrance to the Hubert H. Humphrey building by non-government employees. Persons without a government identification card may need to have the guard call for an escort to the meeting.

Contact Person for more Information: Substantive program information as well as summaries of meetings and a roster of committee members may be obtained from Marjorie S. Greenberg, Executive Secretary NCVHS, National Center for Health Statistics, Centers for Disease Control and Prevention, Room 1100, Presidential Building, 6525 Belcrest Road, Hyattsville, Maryland 20782, telephone (301) 458–4245. Information also is available on the NCVHS home page of the HHS website: http://www.ncvhs.hhs.gov/, where further information will be posted when available.

Dated: May 26, 2000.

James Scanlon,

Director, Division of Data Policy, Office of the Assistant Secretary for Planning and Evaluation.

[FR Doc. 00–14083 Filed 6–5–00; 8:45 am]

BILLING CODE 4151–05–M

DEPARTMENT OF HEALTH AND HUMAN SERVICES

Centers for Disease Control and Prevention

[Program Announcement 00145]

Comprehensive Cancer Control; Notice of Availability of Funds

A. Purpose

The Centers for Disease Control and Prevention (CDC) announces the availability of fiscal year (FY) 2000 funds for a sole source cooperative agreement program for the enhancement and implementation of a comprehensive cancer control initiative. Comprehensive cancer control is an integrated and coordinated approach to reduce the incidence, morbidity, and mortality of cancer through prevention, early detection, treatment, rehabilitation, and palliation. This initiative addresses priority minority populations at the community level including medically underserved men and women.

CDC is committed to achieving the health promotion and disease prevention objectives of ''Healthy People 2010,'' a national activity to reduce morbidity and mortality and improve the quality of life. This announcement is related to the focus area on cancer and the oral cancer objectives in Chapter 21, the oral health focus area. For the conference copy of ''Healthy People 2010,'' visit the Internet site <http://www.health.gov/healthypeople.

The purpose of the initiative is to assist with the following:

- Enhanced coordination among those involved in all aspects of comprehensive cancer control, from prevention to palliation.
- Implementation of priorities that support the State's comprehensive cancer control plan.
- Increased cooperation and collaboration among risk-factor and cancer-specific programs and activities (including surveillance systems) without compromising the integrity of individual categorical programs.
- Enhanced and strengthened coalitions and partnerships that support the overall goals and objectives of the comprehensive cancer control plan.
- A coordinated approach to the dissemination of cancer-related information; and education programs that are consumer-oriented and embody a comprehensive approach to cancer control.
- Capacity-building and institutionalization of organizational changes promoting comprehensive and integrated cancer control.
- The development or revision of a comprehensive cancer control plan that is being used to support the implementation of cancer prevention and control priorities.
- Evaluation methods to track progress related to the planning and implementation of cancer control plan goals and objectives.

B. Eligible Applicants

Assistance will be provided only to the University of Miami for its comprehensive South Florida Minority Cancer Initiative. No other applications are solicited. The sole source justification is based on congressional language in the Conference Report (H.R. Rep. 106–479, at 601 (1999) to the Consolidated Appropriations Act, 2000 (Public Law 106-113), which earmarked funding for the University of Miami, Miami, Florida.

Note: Public Law 104–65 states that an organization described in section 501 (c)(4) of the Internal Revenue Code of 1986 that engages in lobbying activities is not eligible to receive Federal funds constituting an award, grant, cooperative agreement, contract, loan, or any other form.

C. Availability of Funds

Approximately $800,000 is available in FY 2000 to fund the program described below. It is expected that the awards will begin September 30, 2000, and will be made for a 12-month budget period within a project period of up to 3 years. Funding estimates may change.

Continuation awards within an approved project period will be made on the basis of satisfactory progress as evidenced by required reports and the availability of funds.

Use of Funds

Cooperative agreement funds may *not* be expended to provide inpatient hospital or treatment services. Treatment is defined as any service recommended by a clinician, including medical and surgical intervention provided in the management of a diagnosed condition.

These funds are intended for comprehensive cancer control and should not be used to directly support other existing programs such as breast and cervical cancer programs, cancer registry programs, laboratory or clinical services, or tobacco control programs. Indirectly, these funds may be used to assist with the integration and coordination of activities related to these existing programs. Thus, these funds should be used to assist with the coordination of these and other categorical programs into comprehensive cancer control activities. Funds awarded under this program announcement may not be used to supplant existing program efforts.

D. Program Requirements

Comprehensive cancer control activities should adhere to current accepted public health recommendations by the U.S. Preventive Services Task Force, or current Division of Cancer Prevention and Control (DCPC) guidance.

In conducting activities to achieve the purpose of the program, the recipient shall be responsible for the following activities under 1. (Recipient Activities), and CDC will be responsible for activities listed under 2. (CDC Activities).

1. Recipient Activities

a. Identify and hire necessary key staff to implement the comprehensive cancer control plan.

b. Maintain or enhance a broad-based comprehensive cancer control coalition that includes representation from throughout the state. This coalition should include key private, professional, voluntary, and nonprofit organizations, policymakers, consumers

(including cancer survivors), payers, media, State and federal agencies, research and academic institutions, schools, *etc.* Particular emphasis should be placed on ensuring participation from organizations representing minority and medically underserved populations.

c. Establish and implement priorities that support the State's comprehensive cancer control plan, which provides a framework for planning and action to reduce the burden of cancer in the State. Implementation should be guided by goals and objectives documented in an implementation plan to be developed or included as part of this application.

d. Promote collaboration and coordination among existing state-based surveillance systems for use in monitoring changes in cancer disease burden and programmatic impact of the comprehensive cancer control efforts especially in minority and medically underserved populations. Data should be used for program modifications and improvements, evaluation, and updating the comprehensive cancer control plan, as appropriate.

e. Evaluate progress and impact of the program based on a systematic evaluation plan. In addition to evaluating progress in meeting goals, process and impact objectives of the implementation plan, the program should develop performance indicators to use as benchmarks for improvement and to determine the success of the overall comprehensive cancer control effort.

f. Promote the development and dissemination of information and education programs that will contribute to comprehensive cancer control; and as appropriate, participate in national cancer prevention, early detection, and control campaigns. Program should use existing education resources as well as develop materials and activities that address specific needs of the minority and medically underserved populations, as necessary and appropriate. School health education and policies should be considered as part of these strategies. In addition to addressing educational needs of the targeted populations, programs should also consider activities that attempt to make individual, policy, organizational or environmental interventions and changes that can encourage primary prevention at all levels, e.g., organizational changes that can reinforce and support individual behavior changes.

g. Participate in CDC-sponsored trainings, meetings, site visits, and conferences.

2. CDC Activities

a. Convene meetings for information-sharing or training. As appropriate, these meetings will be conducted with other CDC comprehensive cancer control cooperative agreement recipients.

b. Facilitate the exchange of information and collaboration between the recipient and other local, state, regional or national comprehensive cancer control efforts.

c. Disseminate to recipient relevant state-of-the-art research findings and public health recommendations related to comprehensive cancer control.

d. Provide ongoing guidance, consultation, and technical assistance in conducting Recipient Activities.

e. Conduct site visits to assess program progress, and mutually resolve problems, as needed, and coordinate reverse site visits to CDC in Atlanta, Georgia.

F. Application Content

Use the information in the Program Requirements, Other Requirements, and Evaluation Criteria sections to develop the application content. Your application will be evaluated on the criteria listed, so it is important to follow them in laying out your program plan. The narrative should be no more than 20 (twenty) double-spaced pages, printed on one side, with one-inch margins, and unreduced 12 point font.

1. Statement of Need

Identify opportunities for enhancement/improvement and existing gaps in the support of comprehensive cancer control and prevention activities. Describe the extent to which the proposed program will fill existing gaps and provide a brief description of each programmatic plan or research activity.

2. Objectives

Establish and submit short- and long-term objectives relative to the described need in Section 1 above. Objectives must be specific, measurable, attainable, time phased, and realistic.

3. Operational Plan

Submit an operational plan including a timeline that addresses the means for achieving each of the objectives established in Section 2 (objectives) above. Provide a concise description of each component or major activity and how it will be implemented. The plan must identify and establish a time line for the completion of each component or major activity.

4. Evaluation Plan

Submit a plan for monitoring progress toward achieving each of the objectives stated in Section 2 (objectives) above.

5. Program Management

Describe the organizational capacity to conduct and manage cancer prevention and control projects and the project need, functions, and qualification for each program or research personnel requested.

6. Budget

Submit a detailed budget and narrative justification that is consistent with the purpose of the program and the proposed activities.

F. Submission and Deadline

Submit the original and two copies of PHS 5161–1 (OMB Number 0937–0189).

On or before August 1, 2000, submit the application to the Grants Management Specialist identified in the ''Where to Obtain Additional Information'' section of this announcement.

Deadline: Applications will be considered as meeting the deadline if they are either:

a. Received on or before the stated deadline date; or

b. Sent on or before the deadline date. (Applicants must request a legibly dated U.S. Postal Service postmark or obtain a legibly dated receipt from a commercial carrier or the U.S. Postal Service. Private metered postmarks shall not be acceptable proof of timely mailing.)

Late Applications: Applications which do not meet the criteria in a. or b. above are considered late applications and will be returned to the applicant.

G. Evaluation Criteria

The application will be evaluated according to the following criteria by an independent review group appointed by CDC.

1. Need statement. The extent to which the applicant identifies specific opportunities and existing gaps related to the purpose of the program. (10 points)

2. Objectives. The degree to which short- and long-term objectives are specific, measurable, attainable, time phased, and realistic. (20 points)

3. Operational Plans. The adequacy of the applicant's plan to carry out the proposed activities, including the extent to which the applicant plans to work collaboratively with other organizations and individuals who may have an impact on cancer prevention and control objectives particularly among minority and medically underserved

populations; and the extent to which the proposal timeline appears feasible. (25 points)

4. Evaluation Plan. The extent to which the evaluation plan appears capable of monitoring progress toward meeting project objectives. (25 points)

5. Program Management. The extent to which applicant demonstrates the ability to conduct and manage cancer prevention and control projects and that proposed staff appear to be qualified and possess capacity to perform the project. (20 points)

6. Budget. The extent to which each line-item budget and narrative justification are reasonable and consistent with the purpose and objectives of the program. (Not scored)

7. Human Subjects. Does the application adequately address the requirements of Title 45 CFR Part 46 for the protection of human subjects? (Not scored)

The degree to which the applicant has met the CDC Policy requirements regarding the inclusion of women, ethnic, and racial groups in the proposed research. This includes—

a. The proposed plan for the inclusion of both sexes and racial and ethnic minority populations for appropriate representation.

b. The proposed justification when representation is limited or absent.

c. A statement as to whether the design of the study is adequate to measure differences when warranted.

d. A statement as to whether the plans for recruitment and research for study participants include the process of establishing partnerships with community(ies) and recognition of mutual benefits.

H. Other Requirements

Technical Reporting Requirements

Provide CDC with the original plus two copies of the following:

1. Annual written progress report must be submitted 30 days after the end of each budget period.

2. Financial status report (FSR) must be submitted 90 days after the end of each budget period.

3. Final financial and performance reports, must be submitted 90 days after the end of the project period.

Send all reports to the Grants Management Specialist identified in the ''Where to Obtain Additional Information'' section of this announcement.

The following additional requirements are applicable to this program. For a complete description of each, see Attachment I in the application package.

AR–1 Human Subjects Requirement

AR–2 Requirements for Inclusion of Women and Racial and Ethnic Minorities in Research

AR–9 Paperwork Reduction Act Requirements

AR–10 Smoke-Free Workplace Requirements

AR–11 Healthy People 2010

AR–12 Lobbying Restrictions

AR–20 Conference Support

I. Authority and Catalog of Federal Domestic Assistance Number

This program is authorized under sections 301(a), 317(k)(2) of the Public Health Service Act [42 U.S.C. 241(a) and 247b(k)(2)], as amended. The Catalog of Federal Domestic Assistance Number for this program is 93.283.

J. Where To Obtain Additional Information

For this announcement and other CDC program announcements see the CDC home page on the Internet: http://www.cdc.gov.

If you have questions after reviewing the contents of all the documents, business management technical assistance may be obtained from: Cynthia Collins, Grants Management Specialist, Grants Management Branch, Procurement and Grants Office, Announcement 00145, Centers for Disease Control and Prevention (CDC), Room 3627, 2920 Brandywine Road, Atlanta, GA 30341, Telephone (770) 488–2757, E-mail address ccollins@cdc.gov.

For program technical assistance, contact: Corinne Graffunder, Chief, Section A, Program Services Branch, Division of Cancer Prevention and Control, National Center for Chronic Disease Prevention and Health Promotion, Centers for Disease Control and Prevention (CDC), 4770 Buford Highway NE., Mailstop K–57, Atlanta, GA 30341–3724, Telephone (770) 488–4880, fax (770) 488–3230. E-mail address: cgraffunder@cdc.gov.

Dated: May 31, 2000.

John L. Williams,

Director, Procurement and Grants Office, Centers for Disease Control and Prevention (CDC).

[FR Doc. 00–14097 Filed 6–5–00; 8:45 am]

BILLING CODE 4163–18–P

DEPARTMENT OF HEALTH AND HUMAN SERVICES

Centers for Disease Control and Prevention

[Program Announcement 00081]

Cooperative Agreements for National Organizations To Enable Postsecondary Institutions To Prevent HIV Infection and Other Important Health Problems Among Youth Notice of Availability of Funds

A. Purpose

The Centers for Disease Control and Prevention (Center for Disease Control) announces the availability of fiscal year (FY) 2000 funds for a cooperative agreement program to enable postsecondary institutions to prevent HIV infection and other important health problems among youth. Centers for Disease Control is committed to achieving the health promotion and disease prevention objectives of ''Healthy People 2010'', a national activity to reduce morbidity and mortality and improve the quality of life. This announcement is related to the focus areas of HIV and Sexually Transmitted Diseases. For the conference copy of ''Healthy People 2010'', visit the internet site: <http://www.health.gov/healthypeople>.

The purpose of the program is to strengthen the capacity of postsecondary institutions to increase the proportion of college and university students who receive information from their institutions on each of six priority health-risk behaviors (1) sexual behaviors that result in HIV infection, other STDs, and unintended pregnancy; (2) alcohol and other drug use; (3) tobacco use; (4) dietary patterns that result in disease; (5) intentional and unintentional injury; and (6) inadequate physical activity. Applicants may apply for one of the two following priority areas, which are of equal importance:

Priority 1: Institution-wide health promotion programs. To implement strategies for policymakers and practitioners (such as professors, educators, wellness coordinators, health care providers) in colleges and universities to institutionalize comprehensive HIV/AIDS prevention methods into health promotion and disease prevention programs for youth and young adults both on campus and in the community, especially for groups disproportionately affected by HIV/AIDS, including communities of color and youth in high risk situations in large urban areas.

Priority 2: Preservice education. To implement and evaluate strategies for

university, college and other systems which will result in prevention methods for HIV and other serious health problems of youth being included in professional development courses for individuals entering the health, education or service professions and working with groups disproportionately affected by HIV/AIDS, including communities of color in large urban areas.

As additional funds become available, Centers for Disease Control expects to support through competitive supplemental awards other priorities addressing additional health-related areas.

B. Eligible Applicants

Limited Competition

Funding will be provided only to national non-profit organizations, to include national minority organizations, that have postsecondary institutions or programs as their major focus, and that have the capacity to develop an ongoing program of activities to prevent HIV infection and other serious health problems among youth and young adults, especially those in high-risk situations.

Eligible national organizations must have affiliate offices or local, state, or regional membership constituencies in a minimum of 10 states and territories. Affiliate offices and local, state, or regional membership constituencies may not apply in lieu of, or on behalf of, their national office. Colleges and universities and for-profit organizations are not eligible to apply. To be considered a national minority organization, eligible applicants must meet the following criteria:

At least 51 percent of the persons on the governing board must be members of racial or ethnic minority populations.

The organization must possess a documented history of serving racial or ethnic minority populations through its offices, affiliates, or participating organizations at the national level for at least 12 months before the submission of the application to Centers for Disease Control. Non-governmental organizations funded for similar activities under Centers for Disease Control's Program Announcement 99023, ''Cooperative Agreements for National Programs to Prevent HIV Infection and Other Important Health Problems among Youth and Strengthen Coordinated School Health Programs'' are not eligible for funding under this program announcement.

Competition is limited under this program announcement because of the need for directed and concentrated focus in the effective dissemination of information and implementation and evaluation of programs. The coordination and implementation of a national strategy for postsecondary institutions requires organizations that have the capacity and experience to influence the professional actions of their constituencies; have the capacity to provide professional development for implementation of effective programs; and can build the capacity of postsecondary institutions.

Note: Public Law 104–65 states that an organization described in section 501(c)(4) of the Internal Revenue Code of 1986 that engages in lobbying activities is not eligible to receive Federal funds constituting an award, grant, cooperative agreement, contract, loan, or any other form.

C. Availability of Funds

Approximately $2.2 million will be available in FY 2000 to fund approximately 8 awards under the two priority areas including at least one national minority organization. It is expected that awards will range from $200,000 to $300,000. It is expected that the awards will begin on or about September 30, 2000 and will be made for a 12-month budget period within a project period of up to 5 years. Funding estimates may change.

Continuation awards within an approved project period will be made on the basis of satisfactory progress as evidenced by required reports and the availability of funds.

Use of Funds

Funds must be used for categorical activities to prevent behaviors that place young people at risk for HIV infection, other STDs, unintended pregnancy, and other important health problems, especially targeting groups disproportionately affected, including communities of color and youth in high-risk situations particularly in urban settings. (A list of young people considered to be in high-risk situations is included as Attachment I of this program announcement.) Funds may be used to integrate such categorical activities into broader coordinated health programs to improve the health of young people (e.g., college health programs, adolescent health programs, or coordinated school health programs).

Activities funded under this announcement are intended to build the capacity of national non-governmental organizations to promote HIV, STD, and unintended pregnancy prevention among youth and young adults and should not include any formal or informal research. In addition, funds under this announcement are not to be used for clinical services or supplies.

Applicants may apply for funding under only one of the two priority areas and must clearly identify the specific priority area for which funding is requested. As additional funds become available, Center for Disease Control expects to support, through competitive supplemental awards, expanded efforts in other health-related areas.

D. Program Requirements

In conducting activities to achieve the purpose of this program, the recipient shall be responsible for conducting activities under 1 (Recipient Activities) and Center for Disease Control will be responsible for conducting activities under 2 (Center for Disease Control Activities).

1. Recipient Activities

a. Establish and maintain a staff position within the agency that has full-time responsibility and organizational authority for HIV prevention and other health-related activities funded under this announcement. The selected individual in this position should have specific training and experience needed for leadership and coordination of health promotion activities; knowledge and experience working in higher education; and good written and oral skills to enable them to serve as a liaison with partners in health, education, and the community.

b. Collaborate with the organization's constituents in addition to state and local education, health, and social service agencies, non-governmental organizations (especially those also funded under this program announcement), and Center for Disease Control to implement a national strategy to achieve the purposes of this program in postsecondary institutions.

c. Implement specific, measurable, and feasible goals and objectives. Evaluate the effectiveness of the program in achieving goals and objectives by providing indicators of success.

d. Participate in the Division of Adolescent and School Health (DASH) annual conference each budget year of the project for the purpose of improving health education to prevent HIV infection and reduce other important health risks that face youth and young adults.

e. Disseminate project-related information and findings through a variety of methods.

f. Implement an operational plan for the funded priority area that may include, but is not limited to, one or more of the following activities: Possible

activities for Priority Area 1: (Institution-wide health promotion programs).

(1) Form state coalitions of decision-makers to implement health promotion programs for young people in the community, including postsecondary students, focusing on HIV prevention among youth in high-risk situations and within communities of color especially in urban settings. Assist coalitions to develop focused goals, select feasible strategies, obtain critical resources, implement effective collaborative methods, and evaluate program outcomes. The coalition should be state-wide, involve other campuses, and include stakeholders from universities and their governing boards, state or local government agencies, state or local health departments, local school districts, businesses, voluntary and religious organizations, social services organizations, special population groups, community-based organizations, other organizations that serve youth, and legislators.

(2) Integrate comprehensive HIV prevention methods throughout the campus learning environment. Adopt effective, model prevention techniques into the credit curriculum; non-credit courses, programs and services; co-curricular programs; and other education reform initiatives. Foster educational experiences for postsecondary students that actively involve them in community efforts (e.g., through service learning) to prevent HIV and other serious health problems among youth.

(3) Implement campus-wide policies regarding HIV/AIDS and other serious health problems. Include language that supports a healthy campus/community in the institution's mission, vision, and/or values statement(s). Implement policies to broaden the definition of scholarship in universities and colleges to include professional services, especially those that improve the health of children and youth, as criteria for tenure and promotion. Provide assistance to implement such policies and evaluate their effectiveness.

(4) Identify and target youth and young adults engaging in high-risk behaviors with health messages, education, resources, and services, providing particular attention to students living in communities of color especially in urban settings. Evaluate the effects of the intervention.

Possible activities for Priority Area 2: (Preservice education)

(1) Convene policymakers in state systems of higher education, and state and local education agencies to develop or modify policies dealing with university/college professional development courses so prevention of HIV and other serious health problems among youth is institutionalized in preservice training. Assist a designated work group in planning, implementing, and evaluating these changes.

(2) Train university/college instructors and professors to use effective teaching resources for HIV prevention and other serious health problems in professional development courses for educators in general, health educators, counselors, social workers, nurses, physicians and others who will work with youth. Provide technical assistance for these individuals as well as follow up evaluation of their work.

(3) Convene a cross-disciplinary consortium of accrediting bodies or professional associations whose constituencies are teachers, nurses, physicians, public health educators, counselors, social workers, and other practitioners who regularly work with youth. Devise, implement and evaluate a plan to prepare professionals to address HIV prevention/health education for youth.

(4) Form a coalition comprised of members of a pertinent discipline(s) to develop and adopt HIV and health education standards to be included in relevant credentialing guidelines for certification and licensing for youth-serving professionals.

2. Center for Disease Control Activities

a. Provide and periodically update information related to the purposes or activities of this program announcement.

b. Coordinate with national, state, and local education, health and social service agencies, as well as other relevant organizations, in planning and conducting national strategies designed to strengthen programs for preventing HIV infection, other STDs, unintended pregnancy, and other important health risks and health problems among young people.

c. Provide programmatic consultation and guidance related to program planning, implementation, and evaluation; assessment of program objectives; use of indicators; and dissemination of successful strategies, experiences, and evaluation reports.

d. Plan and conduct meetings of national, state, and local education agencies and other appropriate organizations and individuals to address issues and program activities related to improving coordinated school health programs and strengthening the capacity of postsecondary institutions and agencies that serve young people to prevent HIV infection, other STDs, unintended pregnancies and other important health problems among young people.

e. Assist in the evaluation of program activities.

E. Application Content

Use the information in the Program Requirements, Other Requirements, and Evaluation Criteria sections to develop the application content. Your application will be evaluated on the criteria listed, so it is important to follow these in laying out your program plan.

The narrative should be no more than 42 double-spaced pages printed on one side, with one-inch margins, and unreduced font. Pages must be numbered clearly, and a complete table of contents of the application and its appendixes must be included. Begin each separate section on a new page.

Provide a concise, one page Executive Summary that clearly states the priority area being addressed and describes your organization's eligibility, including: (a) its status as a national organization, (b) number and membership of affiliate offices, and (c) experience and capacity of the organization to work with postsecondary institutions and other relevant agencies. The summary should also include the major proposed goals, objectives, and activities for implementation of the project.

Divide the body of the application into the following sections:

1. Background and Need (not more than 4 pages): Identify the priority area for which support is being requested and describe:

a. The needs associated with the priority area.

b. Your organization's background and experience in addressing the needs related to the priority area.

c. The need for the specific activities proposed in your plan.

2. Capacity (not more than 8 pages):

a. Describe your organization's constituents and affiliates as follows:

—Type of constituency.

—Number of constituents and affiliates.

—Location of constituents and affiliates.

—How the constituency can influence and work with the population identified in the priority area.

b. Describe your organization's experience in supporting the priority area for which you are applying, including such factors as:

—Current and previous experience related to the proposed program activities.

—Current and previous coordination with other national organizations and

health, education, and social service agencies.

—Activities related to building alliances, networks, or coalitions.

c. Describe your organization's structure and how it supports health promotion and education activities. Attach a copy of your organizational chart.

3. Operational Plan (not more than 15 pages):

a. Goals. List goals that specifically relate to program requirements that indicate where the program will be at the end of the projected 5 year project period.

b. Objectives. List objectives that are specific, measurable, and feasible to be accomplished during the first 12-month budget period. The objectives should relate directly to the project goals and recipient activities.

c. Describe in narrative form and display on a timetable, specific activities that are related to each first-year objective. Indicate when each activity will occur as well as when preparations for activities will occur. Indicate who will be responsible for each activity.

d. List major milestones that will be accomplished during years two through five.

4. Project Management and Staffing Plan (not more than 8 pages):

a. Describe the proposed staffing for the project and provide job descriptions for existing and proposed positions.

b. Attach curriculum vitae (limited to 2 pages per person) for each professional staff member named in the proposal.

c. Submit job descriptions illustrating the level of organizational responsibility for professional staff who will be assigned to the project.

d. If a state(s) has been identified where the proposed activities will occur, provide the name of this state(s) and the name(s) of the contact person who will coordinate the activity.

5. Sharing experiences (not more than 1 page):

Describe how project materials and accomplishments will be shared with others. Identify appropriate audiences for this information.

6. Collaboration (not more than 2 pages): Describe the purposes of proposed collaboration and the agencies and organizations with which collaboration will be conducted. If other organizations will participate in proposed activities, provide the name(s) of the organization(s), and state who in your organization will coordinate the activity. For each organization listed, provide a letter from them that acknowledges their specific role and describes their capacity to fulfill it. Do not include letters of support from organizations that will not have specific roles in the project.

7. Evaluation (not more than 4 pages): Describe a plan to evaluate the project's effectiveness in meeting its objectives and goals. For each of the types of evaluation listed below, specify the evaluation question(s) to be answered, data to be obtained, the type of analyses that will be performed, to whom it will be reported, and how data will be used to improve the program. The plan should indicate the major steps in the evaluation, who will be responsible for each one, and when each will be accomplished.

a. Process evaluation. Describe how you will evaluate the project's progress in meeting objectives and conducting activities during the budget period.

b. Outcome evaluation. Describe how you will assess the project's effectiveness in attaining goals at the completion of each project year and at the end of the 5 year project period. Specific, measurable indicators of project success should be developed.

8. Budget and Accompanying Justification: Provide a detailed budget narrative and line-item justification of all operating expenses. The budget should be consistent with the stated objectives and planned activities of the project. Budget requests should include the cost for two people for a 2 day trip to Atlanta, Georgia for a planning meeting and a 4 day trip to Atlanta, Georgia for the Division of Adolescent and School Health annual conference.

F. Submission and Deadline

Letter of Intent

The application must be preceded by an original and two copies of a letter of intent to apply. The letter of intent must be submitted on or before June 8, 2000, to the Grants Management Specialist identified in the ''Where to Obtain Additional Information'' section of this announcement.

Your letter of intent should include the name, address, telephone and facsimile numbers of the organization's primary contact for writing and submitting the application. The letter of intent should be limited to a simple statement of your organization's intention to apply and may not exceed one page. The letter of intent will be used to anticipate the number of applications.

Application

Submit the original and two copies of PHS Form 5161–1 (OMB Number 0937–0189). Forms are available in the application kit. On or before June 30, 2000, submit the application to the Grants Management Specialist identified in the ''Where to Obtain Additional Information'' section of this announcement.

Deadline: Applications shall be considered as meeting the deadline if they are either:

1. Received on or before the deadline date; or

2. Sent on or before the deadline date. Applicants must request a legibly dated U.S. Postal Service postmark or obtain a legibly-dated receipt from a commercial carrier or U.S. Postal Service. Private metered postmarks shall not be acceptable as proof of timely mailing.

Late Applications: Applications which do not meet the criteria in (1) or (2) above are considered late applications, will not be considered, and will be returned to the applicant.

G. Evaluation Criteria (100 points)

Each application will be evaluated individually according to the following criteria by an independent review group appointed by the Centers for Disease Control and Prevention.

1. Background and Need (10 points)

The extent to which the applicant justifies need for the program under the priority area, the organization's experience in addressing the priority area, and the need for proposed activities.

2. Capacity (30 points)

The extent to which the applicant demonstrates the capacity and ability of the organization and its constituency to address the identified needs and develop, implement, and evaluate program activities.

3. Operational Plan (25 points)

The extent to which the applicant:

a. Identifies goals that are specific and feasible for the projected 5 year project period and are consistent with program requirements.

b. Identifies objectives for the first year budget period that are specific, measurable, and feasible and are related directly to project goals.

c. Proposes activities that are likely to achieve each objective for the first budget period.

d. Proposes activities that focus on youth in high-risk situations and communities of color especially those in urban settings.

e. Provides a reasonable time line for conducting activities.

f. Outlines major milestones that will be accomplished during years two through five of the project.

4. Project Management and Staffing (15 points)

The extent to which the applicant identifies staff that have the responsibility, capability, and authority to carry out each activity, as evidenced by job descriptions, curriculum vitae, and organizational charts.

5. Sharing Experiences and Resources (5 points)

The extent to which the applicant describes plans to share effective materials and activities with appropriate audiences.

6. Collaboration (5 points)

The extent to which the applicant describes plans to collaborate with agencies such as state and local health and education departments, postsecondary institutions, and other national organizations and provides letters of specific intentions from collaborating agencies.

7. Evaluation (10 points)

The quality of the plans for both process and outcome evaluations, to include specification of indicators of program success, methods of obtaining data, ways of reporting results, use of results for programmatic decisions, and timing and staff responsibility.

8. Budget (Not Scored)

The extent to which the applicant provides a detailed and clear budget narrative consistent with the stated objectives, planned activities, and goals of the project.

H. Other Requirements

1. Technical Reporting Requirements

Provide Center for Disease Control with original plus two copies of:

a. Annual progress reports, no more than 90 days after the end of each budget period;

b. Financial status reports, no more than 90 days after the end of the budget period; and

c. Final financial and performance reports, no more than 90 days after the end of the project period.

Send all reports to the Grants Management Specialist identified in section J, ''Where to Obtain Additional Information''.

2. Research Activities Restricted

Activities funded under this program announcement are intended to build the capacity of postsecondary institutions to promote HIV, other STDs, and unintended pregnancy prevention and to prevent other serious health problems among youth and young adults as described in the two priority areas. Research activities will not be supported under this announcement.

The following additional requirements are applicable to this program. For a complete description of each, see Attachment III in the application kit.

AR–5—HIV Program Review Panel Requirements
AR–7—Executive Order 12372 Review
AR–8—Public Health System Reporting Requirements
AR–9—Paperwork Reduction Act Requirements
AR–10—Smoke-Free Workplace Requirements
AR–11—Healthy People 2010
AR–12—Lobbying Restrictions
AR–15—Proof of Non-profit Status

I. Authority and Catalog of Federal Domestic Assistance Number

This program is authorized under sections 301(a), 317(k)(2) and 1706 [42 U.S.C. 241(a), 247b(k)(2) and 300u–5] of the Public Health Service Act, as amended. The Catalog of Federal Domestic Assistance number is 93.938.

J. Where to Obtain Additional Information

This and other Center for Disease Control announcements can be found on the Center for Disease Control home page <www.cdc.gov>. Click on Funding then click on Grants and Cooperative Agreements. To receive additional written information and to request an application kit, call (1–888–472–6874). You will be asked to leave your name and address and will be instructed to identify the announcement of interest.

If you have questions after reviewing the contents of all documents, business management assistance may be obtained from: Van A. King, Grants Management Specialist, Grants Management Branch, Procurement and Grants Office, Announcement 00081, Centers for Disease Control and Prevention, 2920 Brandywine Road, Room 3000, Atlanta, GA 30341–4146; Telephone Number (770) 488–2751; Email address vbk5@cdc.gov.

For program technical assistance, contact: Mary Vernon-Smiley, Chief, Special Populations Program Section, Division of Adolescent and School Health, National Center for Chronic Disease Prevention and Health Promotion, Centers for Disease Control and Prevention, 4770 Buford Highway, MS K–31, Atlanta, Georgia 30341–4146; Telephone Number (770) 488–325–8004; Email address mev0@cdc.gov.

Dated: May 31, 2000.

John L. Williams,

Director, Procurement and Grants Office, Centers for Disease Control and Prevention (CDC).

[FR Doc. 00–14098 Filed 6–5–00; 8:45 am]

BILLING CODE 4163–18–P

DEPARTMENT OF HEALTH AND HUMAN SERVICES

Food and Drug Administration

Arthritis Advisory Committee; Notice of Meeting

AGENCY: Food and Drug Administration, HHS.

ACTION: Notice.

This notice announces a forthcoming meeting of a public advisory committee of the Food and Drug Administration (FDA). The meeting will be open to the public.

Name of Committee: Arthritis Advisory Committee.

General Function of the Committee: To provide advice and recommendations to the agency on FDA's regulatory issues.

Date and Time: The meeting will be held on July 12, 2000, 8 a.m. to 5 p.m.

Location: Gaithersburg Holiday Inn, Walker and Whetstone Rooms, Two Montgomery Village Ave., Gaithersburg, MD.

Contact Person: Kathleen R. Reedy or LaNise S. Giles, Center for Drug Evaluation and Research (HFD–21), Food and Drug Administration, 5600 Fishers Lane, (for express delivery, 5630 Fishers Lane, rm. 1093) Rockville, MD 20857, 301–827–7001, or e-mail: reedyk@cder.fda.gov, or FDA Advisory Committee Information Line, 1–800–741–8138 (301–443–0572 in the Washington, DC area), code 12532. Please call the Information Line for up-to-date information on this meeting.

Agenda: The Committee will discuss biologics license application (BLA) 99–1234, Remicade™ (infliximab, Centocor) for the treatment of rheumatoid arthritis, prevention of radiographic progression and prevention of physical disability. The Committee will also discuss general issues regarding claims based on radiographic data in patients with rheumatoid arthritis.

Procedure: Interested persons may present data, information, or views, orally or in writing, on issues pending before the committee. Written submissions may be made to the contact person by July 6, 2000. Oral presentations from the public will be scheduled between approximately 11

a.m. and 12 noon. Time allotted for each presentation may be limited. Those desiring to make formal oral presentations should notify the contact person before July 6, 2000, and submit a brief statement of the general nature of the evidence or arguments they wish to present, the names and addresses of proposed participants, and an indication of the approximate time requested to make their presentation.

Notice of this meeting is given under the Federal Advisory Committee Act (5 U.S.C. app. 2).

Dated: May 31, 2000.

Linda A. Suydam,

Senior Associate Commissioner.

[FR Doc. 00–14213 Filed 6–5–00; 8:45 am]

BILLING CODE 4160–01–F

DEPARTMENT OF HEALTH AND HUMAN SERVICES

Food and Drug Administration

[Docket No. 98D–0965]

''Guidance for Industry: Recognition and Use of a Standard for the Uniform Labeling of Blood and Blood Components;'' Availability

AGENCY: Food and Drug Administration, HHS.

ACTION: Notice.

SUMMARY: The Food and Drug Administration (FDA) is announcing the availability of a guidance document entitled ''Guidance for Industry: Recognition and Use of a Standard for the Uniform Labeling of Blood and Blood Components.'' The guidance document describes a system for the uniform labeling of blood and blood components for transfusion, Source Plasma, and other components for use in further manufacturing. The guidance will assist manufacturers in complying with the labeling requirements under FDA's regulations.

DATES: Submit written comments at any time.

ADDRESSES: Submit written requests for single copies of the guidance entitled ''Guidance for Industry: Recognition and Use of a Standard for the Uniform Labeling of Blood and Blood Components'' to the Office of Communication, Training, and Manufacturers Assistance (HFM–40), Center for Biologics Evaluation and Research, Food and Drug Administration, 1401 Rockville Pike, Rockville, MD 20852–1448. Send one self-addressed adhesive label to assist the office in processing your requests. The document may also be obtained by mail by calling the CBER Voice Information System at 1–800–835–4709 or 301–827–1800, or by fax by calling the FAX Information System at 1–888–CBER–FAX or 301–827–3844. See the **SUPPLEMENTARY INFORMATION** section for electronic access to the guidance document.

Submit written comments on the guidance document to the Dockets Management Branch (HFA–305), Food and Drug Administration, 5630 Fishers Lane, rm. 1061, Rockville, MD 20852.

FOR FURTHER INFORMATION CONTACT: For information about this notice: Sharon A. Carayiannis, Center for Biologics Evaluation and Research (HFM–17), Food and Drug Administration, 1401 Rockville Pike, Rockville, MD 20852–1448, 301–827–6210.

For technical information: Kenneth A. Zemann, Center for Biologics Evaluation and Research (HFM–375), Food and Drug Administration, 1401 Rockville Pike, Rockville, MD 20852–1448, 301–827–3543, or FAX 301–827–3534.

SUPPLEMENTARY INFORMATION:

I. Background

The International Council for Commonality in Blood Banking Automation (ICCBBA) prepared and submitted to FDA a draft document entitled ''United States Industry Consensus Standard for the Uniform Labeling of Blood and Blood Components Using *ISBT 128*,'' Version 1.2.0 (draft Standard). The ICCBBA requested that ISBT 128 replace the current ''ABC Codabar'' system as an approved machine readable barcode for labeling blood and blood components. On November 21, 1998, FDA made the draft Standard available on its website for public comment. In the **Federal Register** of November 27, 1998 (63 FR 65600), FDA announced the availability of the draft Standard and requested public comment on both the use of ISBT 128 and timeframes for implementation. The ICCBBA revised the draft Standard in response to public comment and submitted to FDA the revised document entitled ''United States Industry Consensus Standard for the Uniform Labeling of Blood and Blood Components Using *ISBT 128*,'' Version 1.2.0, dated November 1999 (the Version 1.2.0 Standard).

FDA has reviewed the draft Standard, the comments received, and the Version 1.2.0 Standard. FDA believes that conformance to the Version 1.2.0 Standard, prepared and revised by ICCBBA, will help facilitate the use of a uniform container label for blood and blood components. FDA is announcing the availability of a guidance entitled ''Guidance for Industry: Recognition and Use of a Standard for the Uniform Labeling of Blood and Blood Components'' that recognizes as acceptable the Version 1.2.0 Standard prepared by ICCBBA, and the implementation of the ISBT 128 uniform labeling system, except where inconsistent with FDA's regulations under 21 CFR 606.121. Although FDA finds use of the Version 1.2.0 Standard acceptable, FDA has identified inconsistencies between the Version 1.2.0 Standard and Federal regulations. FDA intends to revise the regulations to remove these inconsistencies. The guidance provides recommendations to follow where discrepancies exist between the Version 1.2.0 Standard and the current regulations, pending completion of rulemaking to remove these discrepancies.

This guidance document represents the agency's current thinking with regard to use of the Version 1.2.0 Standard for use in labeling blood, blood components for transfusion, Source Plasma, and other components for further manufacturing use. It does not create or confer any rights for or on any person and does not operate to bind FDA or the public. An alternative approach may be used if such approach satisfies the requirement of the applicable statute, regulations, or both. As with other guidance documents, FDA does not intend this document to be all-inclusive and cautions that not all information may be applicable to all situations. The document is intended to provide information and does not set forth requirements.

II. Comments

Interested persons may submit to the Dockets Management Branch (address above) written comments regarding this guidance document at any time. Two copies of any comments are to be submitted, except individuals may submit one copy. Comments should be identified with the docket number found in the brackets in the heading of this document. A copy of the document and received comments are available for public examination in the Dockets Management Branch between 9 a.m. and 4 p.m., Monday through Friday.

III. Paperwork Reduction Act of 1995

The labeling regulations on which the guidance is based are reported under the Office of Management and Budget (OMB) control number 0910–0116. FDA tentatively concludes that this guidance contains no new collections of information. Therefore, clearance by OMB under the Paperwork Reduction Act of 1995 is not required.

IV. Electronic Access

Persons with access to the Internet may obtain the guidance document and the Version 1.2.0 Standard at http://www.fda.gov/cber/guidelines.htm.

Dated: May 25, 2000.

Margaret M. Dotzel,

Associate Commissioner for Policy.

[FR Doc. 00–14211 Filed 6–2–00; 11:16 am]

BILLING CODE 4160–01–F

DEPARTMENT OF HEALTH AND HUMAN SERVICES

Food and Drug Administration

[Docket No. 00D–1277]

Draft Guidance for Industry: Fumonisin Levels in Human Foods and Animal Feeds; Availability

AGENCY: Food and Drug Administration, HHS.

ACTION: Notice.

SUMMARY: The Food and Drug Administration (FDA) is announcing the availability of a draft guidance document entitled ''Guidance for Industry: Fumonisin Levels in Human Foods and Animal Feeds.'' The purpose of this draft guidance is to identify for the industry recommended maximum fumonisin levels that FDA considers adequate to protect human and animal health and that are achievable in human foods and animal feeds with the use of good agricultural and good manufacturing practices. FDA considers this guidance to be a prudent public health measure during the development of a better understanding of the human health risk associated with fumonisins and the development of a long-term risk management policy and program by the agency for the control of fumonisins in human foods and animal feeds.

DATES: Submit written comments by August 7, 2000.

ADDRESSES: Submit written requests for single copies of the draft guidance entitled ''Draft Guidance for Industry: Fumonisin Levels in Human Foods and Animal Feeds'' to Henry Kim, Center for Food Safety and Applied Nutrition (CFSAN) (address below), or Randall A. Lovell, Center for Veterinary Medicine (CVM) (address below). Send one self-addressed adhesive label to assist that office in processing your request. The draft guidance, CFSAN's ''Background Paper in Support of Fumonisin Levels in Corn and Corn Products Intended for Human Consumption,'' and CVM's ''Background Paper in Support of Fumonisin Levels in Animal Feed,'' may also be accessed at the CFSAN or CVM home page on the Internet at http://www.cfsan.fda.gov and http://www.fda.gov/cvm, respectively.

Submit written comments on the draft guidance to the Dockets Management Branch (HFA–305), Food and Drug Administration, 5630 Fishers Lane, rm. 1061, Rockville, MD 20852. Comments and requests for copies should be identified with the docket number found in brackets in the heading of this document.

FOR FURTHER INFORMATION CONTACT:

Henry Kim, Center for Food Safety and Applied Nutrition (HFS–306), Food and Drug Administration, 200 C St. SW., Washington, DC 20204, 202–260–0631, FAX 202–205–4422, or

Randall A. Lovell, Center for Veterinary Medicine (HFV–222), Food and Drug Administration, 7500 Standish Pl., Rockville, MD 20855, 301–827–0176, FAX 301–827–1484.

SUPPLEMENTARY INFORMATION: FDA has developed a draft guidance document regarding the maximum recommended levels of fumonisins in corn used for production of human foods and animal feeds. Fumonisins are naturally occurring toxins produced by the molds *Fusarium moniliforme* (*F. verticillioides*), *F. proliferatum*, and other *Fusarium* species that are common contaminants of corn. Fumonisins have been linked to a variety of significant adverse health effects in livestock and experimental animals. Although human epidemiological studies are inconclusive at this time, based on a wide variety of significant adverse animal health effects, FDA believes that an association between fumonisins and human disease is possible.

The purpose of the draft guidance is to identify for the industry recommended maximum fumonisin levels that FDA considers adequate to protect human and animal health and that are achievable in human foods and animal feeds with the use of good agricultural and good manufacturing practices. FDA considers this guidance to be a prudent public health measure during the development of a better understanding of the human health risk associated with fumonisins and the development of a long-term risk management policy and program by the agency for the control of fumonisins in human foods and animal feeds. Based on information obtained from future national and international workshops on the risk from exposure to fumonisins, FDA will consider whether to establish tolerances, regulatory limits, or action levels, as appropriate, for fumonisins in human foods and animal feeds, respectively, under 21 CFR Part 109—Unavoidable Contaminants in Food for Human Consumption and Food-Packaging Material and under 21 CFR Part 509—Unavoidable Contaminants in Animal Food and Food-Packaging Material.

The agency has adopted good guidance practices (GGP's) that set forth the agency's policies and procedures for the development, issuance, and use of guidance documents (62 FR 8961, February 27, 1997). The draft guidance document entitled ''Guidance for Industry: Fumonisin Levels in Human Foods and Animal Feeds'' is being issued as a level 1 draft guidance consistent with GGP's. This draft guidance represents the agency's current thinking on the control of fumonisins in human foods and animal feeds as a prudent public health measure. It does not create or confer any rights for or on any person and does not operate to bind FDA or the public. An alternative approach may be used if such approach satisfies the requirements of the applicable statute and regulations.

Interested persons may submit written comments to the Dockets Management Branch (address above) on the draft guidance by August 7, 2000. Two copies of any comments are to be submitted, except that individuals may submit one copy. Comments are to be identified with the docket number found in brackets in the heading of this document. The draft guidance, CFSAN's ''Background Paper in Support of Fumonisin Levels in Corn and Corn Products Intended for Human Consumption,'' CVM's ''Background Paper in Support of Fumonisin Levels in Animal Feed,'' and received comments may be seen in the Dockets Management Branch between 9 a.m. and 4 p.m., Monday through Friday.

Dated: May 26, 2000.

Margaret M. Dotzel,

Associate Commissioner for Policy.

[FR Doc. 00–14106 Filed 6–5–00; 8:45 am]

BILLING CODE 4160–01–F

DEPARTMENT OF HEALTH AND HUMAN SERVICES

Health Care Financing Administration

[Document Identifier: HCFA–2540–96]

Agency Information Collection Activities: Proposed Collection; Comment Request

AGENCY: Health Care Financing Administration.

In compliance with the requirement of section 3506(c)(2)(A) of the Paperwork Reduction Act of 1995, the Health Care Financing Administration (HCFA), Department of Health and Human Services, is publishing the following summary of proposed collections for public comment. Interested persons are invited to send comments regarding this burden estimate or any other aspect of this collection of information, including any of the following subjects: (1) The necessity and utility of the proposed information collection for the proper performance of the agency's functions; (2) the accuracy of the estimated burden; (3) ways to enhance the quality, utility, and clarity of the information to be collected; and (4) the use of automated collection techniques or other forms of information technology to minimize the information collection burden.

Type of Information Collection Request: Revision of a currently approved collection; *Title of Information Collection:* Skilled Nursing Facility Cost Report and Supporting Regulations in 42 CFR 413.20 and 413.24; *Form No.:* HCFA–2540 (OMB 0938–0463); *Use:* Form HCFA–2540–96 is the form used by skilled nursing facilities participating in the Medicare program. This form reports the health care costs used to determine the amount of reimbursable costs for services rendered to Medicare beneficiaries; *Frequency:* Annually; *Affected Public:* Businesses or other for-profit; Not-for-profit institutions; *Number of Respondents:* 15,700; *Total Annual Responses:* 15,706; *Total Annual Hours:* 2,943,200.

To obtain copies of the supporting statement and any related forms for the proposed paperwork collections referenced above, access HCFA's Web Site address at http://www.hcfa.gov/regs/prdact95.htm, or E-mail your request, including your address, phone number, OMB number, and HCFA document identifier, to Paperwork@hcfa.gov, or call the Reports Clearance Office on (410) 786–1326. Written comments and recommendations for the proposed information collections must be mailed within 60 days of this notice directly to the HCFA Paperwork Clearance Officer designated at the following address: HCFA, Office of Information Services, Security and Standards Group, Division of HCFA Enterprise Standards, Attention: Julie Brown, Room N2–14–26, 7500 Security Boulevard, Baltimore, Maryland 21244–1850.

Dated: May 25, 2000.

John P. Burke III,

Reports Clearance Officer, Security and Standards Group, Division of HCFA Enterprise Standards.

[FR Doc. 00–13987 Filed 6–5–00; 8:45 am]

BILLING CODE 4120–03–M

DEPARTMENT OF HEALTH AND HUMAN SERVICES

Health Care Financing Administration

[Document Identifier: HCFA–R–0280]

Agency Information Collection Activities: Submission for OMB Review; Comment Request

AGENCY: Health Care Financing Administration.

In compliance with the requirement of section 3506(c)(2)(A) of the Paperwork Reduction Act of 1995, the Health Care Financing Administration (HCFA), Department of Health and Human Services, is publishing the following summary of proposed collections for public comment. Interested persons are invited to send comments regarding this burden estimate or any other aspect of this collection of information, including any of the following subjects: (1) The necessity and utility of the proposed information collection for the proper performance of the agency's functions; (2) the accuracy of the estimated burden; (3) ways to enhance the quality, utility, and clarity of the information to be collected; and (4) the use of automated collection techniques or other forms of information technology to minimize the information collection burden.

Type of Information Request: Extension of a currently approved collection; *Type of Information Collection:* Medigap Compare; *HCFA Form Number:* HCFA–R–0280 (OMB approval #:0938–0767); *Use:* HCFA collects plan-specific Medigap data, including but not limited to premiums charged and additional benefits offered, from each insurer offering Medigap plans. The data collection occurs electronically. The data are provided on www.medicare.gov to assist beneficiaries in obtaining accurate information on all their health care coverage options; *Frequency:* Annually, and semi-annually if needed; *Affected Public:* Business or other for-profit, Federal Government, State, Local, or Tribal Government, Not-for-profit institutions; *Number of Respondents:* 300; *Total annual Responses:* 450; *Total Annual Burden Hours:* 75.

To obtain copies of the supporting statement and any related forms for the proposed paperwork collections referenced above, access HCFA's Web Site address at http://www.hcfa.gov/regs/prdact95.htm, or E-mail your request, including your address, phone number, OMB number, and HCFA document identifier, to Paperwork@hcfa.gov, or call the Reports Clearance Office on (410) 786–1326. Written comments and recommendations for the proposed information collections must be mailed within 30 days of this notice directly to the OMB desk officer: OMB Human Resources and Housing Branch, Attention: Allison Eydt, New Executive Office Building, Room 10235, Washington, D.C. 20503.

Dated: May 25, 2000.

John P. Burke III,

HCFA Reports Clearance Officer, HCFA Office of Information Services, Security and Standards Group, Division of HCFA Enterprise Standards.

[FR Doc. 00–14067 Filed 6–5–00; 8:45 am]

BILLING CODE 4120–03–M

DEPARTMENT OF HEALTH AND HUMAN SERVICES

Health Care Financing Administration

[Document Identifier: HCFA–10006]

Emergency Clearance: Public Information Collection Requirements Submitted to the Office of Management and Budget (OMB)

AGENCY: Health Care Financing Administration.

In compliance with the requirement of section 3506(c)(2)(A) of the Paperwork Reduction Act of 1995, the Health Care Financing Administration (HCFA), Department of Health and Human Services, is publishing the following summary of proposed collections for public comment. Interested persons are invited to send comments regarding this burden estimate or any other aspect of this collection of information, including any of the following subjects: (1) The necessity and utility of the proposed information collection for the proper performance of the agency's functions; (2) the accuracy of the estimated burden; (3) ways to enhance the quality, utility, and clarity of the information to be collected; and (4) the use of automated collection techniques or other forms of information technology to minimize the information collection burden.

We are, however, requesting an emergency review of the information

collections referenced below. In compliance with the requirement of section 3506(c)(2)(A) of the Paperwork Reduction Act of 1995, we have submitted to the Office of Management and Budget (OMB) the following requirements for emergency review. We are requesting an emergency review because the collection of this information is needed before the expiration of the normal time limits under OMB's regulations at 5 CFR, part 1320. This is necessary to ensure compliance with section 204 of the Ticket to Work and Work Incentives Act of 1999. We cannot reasonably comply with the normal clearance procedures because the law becomes effective on October 2, 2000, at which time we must award grants. Prior to that time, we must publish a notice in the **Federal Register** soliciting applications and have sufficient time to review all applications adequately. Delay of this approval will also result in public harm, as the awarding of grants will be delayed, thus delaying the ability to prevent physically and mentally impaired workers from becoming disabled because of not being eligible for Medicaid.

HCFA is requesting OMB review and approval of this collection by June 13, 2000, with a 180-day approval period. Written comments and recommendations will be accepted from the public if received by the individuals designated below by June 12, 2000. During this 180-day period, we will publish a separate **Federal Register** notice announcing the initiation of an extensive 60-day agency review and public comment period on these requirements. We will submit the requirements for OMB review and an extension of this emergency approval.

Type of Information Request: New collection; *Title of Information Collection:* TWWIIA Demonstration to Maintain Independence and Employment; *HCFA Form Number:* HCFA–10006 (OMB approval #: 0938–NEW); *Use:* Section 204 of the Ticket to Work and Work Incentives Act provides for the establishment of grants for states that develop and implement demonstration programs designed to support working people with physical or mental impairments that without medical assistance will result in disability. State agencies will be applying for these grants; *Frequency:* Annually; *Affected Public:* State, local or tribal government; *Number of Respondents:* 56; *Total Annual Responses:* 56; *Total Annual Burden Hours:* 5,600.

We have submitted a copy of this notice to OMB for its review of these information collections. A notice will be published in the **Federal Register** when approval is obtained.

To obtain copies of the supporting statement and any related forms for the proposed paperwork collections referenced above, access HCFA's Web Site address at http://www.hcfa.gov/regs/prdact95.htm, or E-mail your request, including your address, phone number, OMB number, and HCFA document identifier, to Paperwork@hcfa.gov, or call the Reports Clearance Office on (410) 786–1326.

Interested persons are invited to send comments regarding the burden or any other aspect of these collections of information requirements. However, as noted above, comments on these information collection and recordkeeping requirements must be mailed and/or faxed to the designees referenced below, by June 12, 2000.

Health Care Financing Administration, Office of Information Services, Security and Standards Group, Division of HCFA Enterprise Standards, Room N2–14–26, 7500 Security Boulevard, Baltimore, MD 21244–1850. Fax Number: (410) 786–0262 Attn: Julie Brown HCFA–10006 and,

Office of Information and Regulatory Affairs, Office of Management and Budget, Room 10235, New Executive Office Building, Washington, DC 20503, Fax Number: (202) 395–6974 Attn.: Allison Herron Eydt, HCFA Desk Officer.

Dated: May 31, 2000.

John P. Burke III,

HCFA Reports Clearance Officer, HCFA, Office of Information Services, Security and Standards Group, Division of HCFA Enterprise Standards.

[FR Doc. 00–14263 Filed 6–5–00; 8:45 am]

BILLING CODE 4120–03–P

DEPARTMENT OF HEALTH AND HUMAN SERVICES

Health Care Financing Administration

[HCFA–1138–N]

Medicare Program; Town Hall Meeting To Discuss the Documentation Guidelines for Evaluation and Management Services—June 22, 2000

AGENCY: Health Care Financing Administration (HCFA), HHS.

ACTION: Notice of meeting.

SUMMARY: This notice announces a town hall meeting to discuss the current status of our work on revising the documentation guidelines for evaluation and management (E/M) services. The documentation guidelines provide the health care community with information regarding the proper use of E/M Current Procedural Terminology (CPT) codes. This meeting will present the results of our efforts to simplify the guidelines, reduce the burden on physicians, and foster consistent and fair medical review.

Since receiving recommendations for revising the existing guidelines from the American Medical Association (AMA) CPT Editorial Panel in June 1999, we have performed a technical assessment of those recommendations, reviewed other proposals for revising the guidelines, and started to plan a study of proposed revisions to the documentation guidelines. The purpose of this meeting is to inform the public about the current status of these activities and to reaffirm our commitment to work with physicians to improve the service they receive from the Medicare program. The meeting is open to the public, but attendance is limited to the space available.

DATES: *The Meeting:* June 22, 2000 from 9 a.m. until 1 p.m., E.D.T.

Registration: Persons wishing to attend the meeting must register by June 21, 2000.

Special Accommodations: Persons attending the meeting who are hearing impaired and require sign language interpretation, or have a condition that requires other special assistance or accommodations, should notify Ms. Martha Dixon by June 14, 2000.

ADDRESSES: The meeting will be held in the auditorium of the Health Care Financing Administration, 7500 Security Boulevard, Baltimore, Maryland 21244.

FOR FURTHER INFORMATION CONTACT: Dr. Bernice Harper, (202) 690–7899, for general questions about the meeting. Ms. Martha Dixon, (202) 358–1420, for questions regarding registration or special accommodations.

SUPPLEMENTARY INFORMATION:

Intent of the Meeting

The intent of this meeting is to provide an update to the public on documentation guidelines for evaluation and management services Current Procedural Terminology (CPT) codes. Although there will be a question and answer period, there will be no time scheduled for public presentations by the attendees.

Agenda Topics

The following topics will be addressed by members of our staff at the meeting:

- The history and current status of the documentation guidelines.
- Our technical assessment of the June 1999 proposed AMA recommendations.
- Other proposals for revising the guidelines.
- The proposed study.
- The role of organized medicine and practicing physicians in commenting on the guidelines and the study.
- A proposed time line for eventual implementation of new documentation guidelines.
- New efforts to improve responsiveness and service to physicians.

Registration

If you wish to attend the meeting, you must register in advance by sending a fax to the attention of Ms. Martha Dixon, Office of Professional Relations, at (202) 401–7438 by the date listed in the **DATES** section of this notice. Your fax must include your name, organization, address, telephone number, and fax number. Our receipt of your fax will constitute confirmation of your registration. If space at the meeting is no longer available when your fax is received, you will be notified by phone that you are on an attendance waiting list. If space should subsequently become available, individuals on the waiting list will be notified in turn. Written materials will be provided at the time of the meeting.

Authority: Section 1102 of the Social Security Act (42 U.S.C. 1302).

(Catalog of Federal Domestic Assistance Program No. 93.774, Medicare—Supplementary Medical Insurance Program)

Dated: June 1, 2000.

Nancy-Ann Min DeParle,

Administrator, Health Care Financing Administration.

[FR Doc. 00–14163 Filed 6–5–00; 8:45 am]

BILLING CODE 4120–01–M

DEPARTMENT OF HEALTH AND HUMAN SERVICES

Health Care Financing Administration

Privacy Act of 1974; System of Records

AGENCY: Department of Health and Human Services (HHS), Health Care Financing Administration (HCFA).

ACTION: Notice To Delete Three Systems of Records.

SUMMARY: The Health Care Financing Administration is deleting three systems of records from its inventory subject to the Privacy Act of 1974 (5 U.S.C. 552a), as amended.

EFFECTIVE DATE: The deletions will be effective on June 6, 2000.

ADDRESSES: The public should address comments to: Director, Division of Data Liaison and Distribution, HCFA, Room N2–04–27, 7500 Security Boulevard, Baltimore, Maryland 21244–1850. The telephone number is (410) 786–3673. Comments received will be available for review at this location, by appointment, during regular business hours, Monday through Friday from 9 a.m.-3 p.m., eastern time zone.

SUPPLEMENTARY INFORMATION: The ''Medicare Enrollment Records Statistics (MERS),'' System No. 09–70–0006, was established to study the characteristics of persons enrolled in the Medicare program and establish the basis for Medicare services utilization rates. The ''Health Insurance Enrollment Statistics (HIES), General Enrollment Period,'' System No. 09–70–0007 was established to contact persons eligible for Part B benefits who had refused or withdrawn coverage of these benefits, for purposes of re-enrollment for Part B coverage and to evaluate results of such contacts. The ''Medicare Beneficiary Correspondence Files (MBC),'' System No. 09–70–0509 was established to maintain and track correspondence in a HCFA component that no longer exist. All of these systems are being deleted from HCFA's inventory because they are no longer used. Retention and destruction of the data contained in these systems has been in accordance with the retention and disposal schedules listed in the system notice.

Deletions

No. 09–70–0006 ''Medicare Enrollment Records Statistics (MERS),'' HHS/HCFA/BDMS;

No. 09–70–0007 ''Health Insurance Enrollment Statistics (HIES), General Enrollment Period,'' HHS/HCFA/BDMS.

No. 09–70–0509 ''Medicare Beneficiary Correspondence Files (MBC),'' HHS/HCFA/BPO;

Dated: May 26, 2000.

Nancy-Ann Min DeParle,

Administrator, Health Care Financing Administration.

[FR Doc. 00–14071 Filed 6–5–00; 8:45 am]

BILLING CODE 4120–03–U

DEPARTMENT OF HEALTH AND HUMAN SERVICES

Health Resources and Services Administration

Agency Information Collection Activities: Proposed Collection: Comment Request

In compliance with the requirement for opportunity for public comment on proposed data collection projects (section 3506(c)(2)(A) of Title 44, United States Code, as amended by the Paperwork Reduction Act of 1995, Pub. L. 104–13), the Health Resources and Services Administration (HRSA) publishes periodic summaries of proposed projects being developed for submission to OMB under the Paperwork Reduction Act of 1995. To request more information on the proposed project or to obtain a copy of the data collection plans and draft instruments, call the HRSA Reports Clearance Officer on (301) 443–1129.

Comments are invited on: (a) Whether the proposed collection of information is necessary for the proper performance of the functions of the agency, including whether the information shall have practical utility; (b) the accuracy of the agency's estimate of the burden of the proposed collection of information; (c) ways to enhance the quality, utility, and clarity of the information to be collected; and (d) ways to minimize the burden of the collection of information on respondents, including the use of automated collection techniques or other forms of information technology.

Proposed Project: Drug Pricing Program Reporting Requirements (OMB No. 0915–0176)

Extension—Section 602 of Public Law 102–585, the Veterans Health Care Act of 1992, enacted section 340B of the Public Health Service Act (PHS Act), ''Limitation on Prices of Drugs Purchased by Covered Entities.'' Section 340B provides that a manufacturer who sells covered outpatient drugs to eligible entities must sign a pharmaceutical pricing agreement with the Secretary of Health and Human Services in which the manufacturer agrees to charge a price for covered outpatient drugs that will not exceed an amount determined under a statutory formula.

Covered entities which choose to participate in the section 340B drug discount program must comply with the requirements of section 340B(a)(5) of the PHS Act. Section 340B(a)(5)(A) prohibits a covered entity from accepting a discount for a drug that would also generate a Medicaid rebate.

Further, section 340B(a)(5)(B) prohibits a covered entity from reselling or otherwise transferring a discounted drug to a person who is not a patient of the entity.

Because of the potential for disputes involving covered entities and participating drug manufacturers, the HRSA Office of Pharmacy Affairs (OPA) has developed a dispute resolution process for manufacturers and covered entities as well as manufacturer guidelines for audits of covered entities.

Audit guidelines: A manufacturer will be permitted to conduct an audit only when there is reasonable cause to believe a violation of section 340B(a)(5)(A) or (B) has occurred. The manufacturer must notify the covered entity in writing when it believes the covered entity has violated these provisions of section 340B. If the problem cannot be resolved, the manufacturer must then submit an audit work plan describing the audit and evidence in support of the reasonable cause standard to the HRSA OPA for review. The office will review the documentation to determine if reasonable cause exists. Once the audit is completed, the manufacturer will submit copies of the audit report to the HRSA OPA for review and resolution of the findings, as appropriate. The manufacturer will also submit an informational copy of the audit report to the HHS Office of Inspector General.

Dispute resolution guidelines: Because of the potential for disputes involving covered entities and participating drug manufacturers, the HRSA OPA has developed a dispute resolution process which can be used if an entity or manufacturer is believed to be in violation of section 340B. Prior to filing a request for resolution of a dispute with the HRSA OPA, the parties must attempt, in good faith, to resolve the dispute. All parties involved in the dispute must maintain written documentation as evidence of a good faith attempt to resolve the dispute. If the dispute is not resolved and dispute resolution is desired, a party must submit a written request for a review of the dispute to the HRSA OPA. A committee appointed to review the documentation will send a letter to the party alleged to have committed a violation. The party will be asked to provide a response to or a rebuttal of the allegations.

To date, there have been no requests for audits, and no disputes have reached the level where a committee review was needed. As a result, the estimates of annualized hour burden for audits and disputes have been reduced to the level shown in the table below.

Reporting requirement	Number of respondents	Responses per respondent	Total responses	Hours/ response	Total burden hours
Audits:					
Audit Notification of Entity [1]	2	1	2	4	8
Audit Workplan [1]	1	1	1	8	8
Audit Report [1]	1	1	1	1	1
Entity Response	0	0	0	16	0
Dispute Resolution:					
Mediation Request	5	1	5	8	40
Rebuttal	2	1	2	16	32
Total	9	1.2	11	8.1	89

[1] Prepared by the manufacturer

Recordkeeping requirement	Number of recordkeepers	Hours of recordkeeping	Total burden
Dispute records	10	.5	5

The total burden is 94 hours.

Send comments to Susan G. Queen, HRSA Reports Clearance Officer, Room 14–33, Parklawn Building, 5600 Fishers Lane, Rockville, MD 20857. Written comments should be received within 60 days of this notice.

Dated: June 1, 2000.

James J. Corrigan,

Associate Administrator for Management and Program Support.

[FR Doc. 00–14215 Filed 6–5–00; 8:45 am]

BILLING CODE 4160–15–P

DEPARTMENT OF HEALTH AND HUMAN SERVICES

Health Resources and Services Administration

Advisory Commission on Childhood Vaccines; Request for Nominations for Voting Members

AGENCY: Health Resources and Services Administration, HHS.

ACTION: Notice.

SUMMARY: The Health Resources and Services Administration (HRSA) is requesting nominations to fill three vacancies on the Advisory Commission on Childhood Vaccines (ACCV). The ACCV was established by Title XXI of the Public Health Service Act (the Act), as enacted by Public Law (Pub. L.) 99–660 and as subsequently amended, and advises the Secretary of Health and Human Services (the Secretary) on issues related to implementation of the National Vaccine Injury Compensation Program (VICP).

FOR FURTHER INFORMATION CONTACT: Ms. Shelia Tibbs, Principal Staff Liaison, Policy Analysis Branch, Division of Vaccine Injury Compensation, at (301) 443–4036.

DATES: Nominations are to be submitted by July 6, 2000.

ADDRESSES: All nominations are to be submitted to the Director, Division of Vaccine Injury Compensation, Bureau of Health Professions, HRSA, Parklawn Building, Room 8A–46, 5600 Fishers Lane, Rockville, Maryland 20857.

SUPPLEMENTARY INFORMATION: Under the authorities that established the ACCV, viz., the Federal Advisory Committee Act of October 6, 1972 (Pub. L. 92–463) and section 2119 of the Act, 42 U.S.C. 300aa–19, as added by Public Law 99–

660 and amended, HRSA is requesting nominations for three voting members of the ACCV.

The ACCV advises the Secretary on the implementation of the VICP; on its own initiative or as the result of the filing of a petition, recommends changes in the Vaccine Injury Table; advises the Secretary in implementing the Secretary's responsibilities under section 2127 regarding the need for childhood vaccination products that result in fewer or no significant adverse reactions; surveys Federal, State, and local programs and activities relating to the gathering of information on injuries associated with the administration of childhood vaccines, including the adverse reaction reporting requirements of section 2125(b); advises the Secretary on means to obtain, compile, publish, and use credible data related to the frequency and severity of adverse reactions associated with childhood vaccines; and recommends to the Director, National Vaccine Program Office, research related to vaccine injuries which should be conducted to carry out the VICP.

The ACCV consists of nine voting members appointed by the Secretary as follows: three health professionals, of whom at least two are pediatricians, who are not employees of the United States, who have expertise in the health care of children, the epidemiology, etiology and prevention of childhood diseases, and the adverse reactions associated with vaccines; three members from the general public, of whom at least two are legal representatives (parents or guardians) of children who have suffered a vaccine-related injury or death; and three attorneys, of whom at least one shall be an attorney whose specialty includes representation of persons who have suffered a vaccine-related injury or death, and one shall be an attorney whose specialty includes representation of vaccine manufacturers. In addition, the Director of the National Institutes of Health, the Assistant Secretary for Health, the Director of the Centers for Disease Control and Prevention, and the Commissioner of the Food and Drug Administration (or the designees of such officials) serve as nonvoting ex officio members.

Specifically, HRSA is requesting nominations for three voting members of the ACCV representing: (1) a health professional with special experience in childhood diseases; (2) an attorney whose specialty includes representation of a vaccine manufacturer and (3) a member from the general public. Nominees will be invited to serve 3-year terms beginning January 1, 2001, and ending December 31, 2003.

Interested persons may nominate one or more qualified persons for membership on the ACCV. Nominations shall state that the nominee is willing to serve as a member of the ACCV and appears to have no conflict of interest that would preclude the ACCV membership. Potential candidates will be asked to provide detailed information concerning such matters as financial holdings, consultancies, and research grants or contracts to permit evaluation of possible sources of conflicts of interest. A curriculum vitae or resume should be submitted with the nomination.

The Department of Health and Human Services has special interest in assuring that women, minority groups, and the physically handicapped are adequately represented on advisory committees and therefore extends particular encouragement to nominations for appropriately qualified female, minority, or physically handicapped candidates.

Dated: May 30, 2000.

Claude Earl Fox,

Administrator, HRSA.

[FR Doc. 00–14041 Filed 6–5–00; 8:45 am]

BILLING CODE 4160–15–P

DEPARTMENT OF HEALTH AND HUMAN SERVICES

Health Resources and Services Administration

Advisory Commission on Childhood Vaccines (ACCV); Notice of Meeting; Cancellation

Federal Register Document 00–11251, in the issue dated Friday, May 5, 2000, on the following pages 26219–26220, the Advisory Commission on Childhood Vaccines meeting scheduled for June 7, 2000, has been cancelled due to lack of quorum.

Dated: May 31, 2000.

Jane M. Harrison,

Director, Division of Policy Review and Coordination.

[FR Doc. 00–14107 Filed 6–5–00; 8:45 am]

BILLING CODE 4160–15–P

DEPARTMENT OF THE INTERIOR

Fish and Wildlife Service

Availability of Draft Comprehensive Conservation Plan and Environmental Assessment for Tewaukon National Wildlife Refuge Complex, Cayuga, ND.

AGENCY: Fish and Wildlife Service, Interior.

ACTION: Notice of availability.

SUMMARY: Pursuant to the Refuge Improvement Act of 1997, the U.S. Fish and Wildlife Service has published the Tewaukon National Wildlife Refuge Complex Draft Comprehensive Conservation Plan and Environmental Assessment. This Plan describes how the FWS intends to manage the Tewaukon NWR and Wetland Management District for the next 10–15 years.

DATES: Submit written comments by July 6, 2000. All comments need to be addressed to Allison Banks, Refuge Planner, Land Acquisition and Refuge Planning, U.S. Fish and Wildlife Service, P.O. Box 25486 DFC, Denver, Colorado 80225.

ADDRESSES: A copy of the Plan may be obtained by writing to U.S. Fish and Wildlife Service, 9754 143½ Avenue SE, Cayuga, ND 58013–9764; or download from http://www.r6.fws.gov/larp/.

FOR FURTHER INFORMATION CONTACT: Allison Banks, U.S. fish and Wildlife Service, P.O. Box 25486 DFC, Denver, CO 80225, 303/236–8145 extension 626; fax 303/236–4792.

SUPPLEMENTARY INFORMATION: Tewaukon NWR Complex is located in southeast North Dakota. Implementation of the Plan will focus on adaptive resource management of glaciated prairie wetlands, tall and mixed grass prairie grasslands, riparian woodlands, and opportunities for compatible wildlife-dependent recreation. Habitat monitoring and evaluation will be emphasized as the Plan is implemented. Opportunities for compatible wildlife-dependent recreation will continue to be provided.

Dated: May 31, 2000.

Ralph O. Morgenweck,

Regional Director, Denver, Colorado.

[FR Doc. 00–14100 Filed 6–5–00; 8:45 am]

BILLING CODE 4310–55–M

DEPARTMENT OF THE INTERIOR

Fish and Wildlife Service

Endangered and Threatened Wildlife and Plants; 12-Month Finding for a Petition to List the Southern Torrent Salamander in California as Endangered or Threatened

AGENCY: Fish and Wildlife Service, Interior.

ACTION: Notice of 12-month petition finding.

SUMMARY: We, the U.S. Fish and Wildlife Service (Service), announce a 12-month finding for a petition to list the southern torrent salamander (*Rhyacotriton variegatus*) in northern California and southern Oregon under the Endangered Species Act of 1973, as amended. After review of all available scientific and commercial information, we find that listing the southern torrent salamander is not warranted at this time. The finding is based on the following information: The species still occurs throughout its entire historical range; the species persists in its habitats after habitat alterations have occurred, including logging; the lack of information on short-and long-term population trends for the species across its range; the adverse impacts to the species from logging, construction of logging roads, and logging related activities do not threaten the survival of the species; the lack of substantial information indicating that overutilization for commercial, recreational, scientific, or educational purposes adversely impacts the species; the lack of evidence showing conclusively that predation is a threat to the species' survival; current regulatory practices do not constitute a threat to the survival of the species; and the lack of information that the species is threatened by low gene flow and low genetic diversity across its range.

DATES: The finding for this document was made on May 31, 2000. Comments and information may be submitted until further notice.

ADDRESSES: Data, information, comments, and material concerning the petition finding may be submitted to the Field Supervisor, U.S. Fish and Wildlife Service, Sacramento Fish and Wildlife Office, 2800 Cottage Way, W–2605, Sacramento, California 95825–1864. The 12-month petition finding, supporting data, and comments are available for public inspection, by appointment, during normal business hours at the above address.

FOR FURTHER INFORMATION CONTACT: Ms. Ann Chrisney or Ms. Jan Knight at the above address or telephone (916) 414–6600.

SUPPLEMENTARY INFORMATION:

Background

Section 4(b)(3)(B) of the Endangered Species Act of 1973, as amended (16 U.S.C. 1531 *et seq.*) (Act), requires that, for any petition to revise the Lists of Endangered and Threatened Wildlife and Plants that presents substantial scientific and commercial information, we make a finding within 12 months of the date of the receipt of the petition on whether the petitioned action is (a) not warranted, (b) warranted, or (c) warranted but precluded from an immediate proposal by other pending proposals of higher priority. Such 12-month findings are to be published promptly in the **Federal Register**.

On May 31, 1994, we received a petition from Stephan Volker, dated May 24, 1994, to list the southern torrent salamander (*Rhyacotriton variegatus*) as threatened. Mr. Volker is an attorney representing the Environmental Protection Information Center, North Coast Environmental Center, Oregon Natural Resources Council, California Wilderness Coalition, Friends of the River, South Fork Mountain Defense Committee, Mendocino Environmental Center, Sierra Club, California Sportfishing Alliance, Willits Environmental Center, and Ancient Forest Defense Fund. The petition stated that timber harvesting fragmented the salamander's habitat on Federal and private lands, decimated its population, and sharply inhibited its dispersal capability. In a letter to Mr. Volker, dated June 10, 1994, we explained that, under the provisions of the Act, we must decide if the petition presents substantial scientific or commercial information that the requested action is warranted and, to the maximum extent practicable, make this finding within 90 days after receiving the petition and promptly publish it in the **Federal Register**. On November 15, 1994 (59 FR 58982), we designated the species as a category 2 candidate species. Although we no longer use this designation, a category 2 candidate was considered a species for which Federal listing may be appropriate, but persuasive data on biological vulnerability and threats were not available to support a proposed listing. Although no mandatory protection was conferred with this status, the notice of this status supported the need to conduct research to determine the threats and vulnerability of the species. On June 29, 1995, we determined that Mr. Volker's petition presented substantial information that the requested action may be warranted, and we published an announcement of our administrative finding (60 FR 33785). At that time, we initiated a status review of the southern torrent salamander.

Due to a limited budget, listing actions required by court orders, and other higher listing priorities, we were unable to make a listing determination on this species in a timely manner. On April 10, 1995, a moratorium on listing actions (Public Law 104–6) took effect with the stipulation that no funds could be used to make final listing or critical habitat determinations. When the moratorium was lifted on April 26, 1996, a three-tier approach was established to rank the backlog of listing actions for fiscal year 1996 (May 16, 1996; 61 FR 24722). The 12-month status review for the southern torrent salamander was designated a Tier 3 activity, the lowest listing priority. On December 5, 1996, new listing guidance was published for fiscal year 1997 (61 FR 64475) that used a four-tier approach. The 12-month status review for the southern torrent salamander remained a Tier 3 activity. However, due to a continuing backlog of listing actions, we focused our resources on Tier 1 and Tier 2 actions until April 1, 1997. By April 1, 1997, we began to address Tier 3 actions, but a serious backlog of listing actions still existed. On May 8, 1998, we published the Listing Priority Guidance for FY 1998 and 1999 (63 FR 25502), and the 12-month status review for the southern torrent salamander was raised to Tier 2. Although we published 2 emergency listings, 47 final listings, 10 withdrawals, 48 proposed listings, and 18 petition findings, the southern torrent salamander was among 22 species with pending 12-month findings. On October 22, 1999, we published the Final Listing Priority Guidance for Fiscal Year 2000 (64 FR 57114). The tier approach was eliminated as a guide for handling our remaining backlog and future work in the listing program in favor of a priority system that identified higher priorities for certain listing actions. Processing administrative findings on petitions, such as the one for the southern torrent salamander, was designated a fourth priority.

Species Information

Southern torrent salamanders have very specific habitat requirements of cold, shallow, flowing headwaters in humid coniferous forests up to an elevation of 1,469 meters (m) (4,820 feet (ft)) (Nussbaum and Tait 1977;

Nussbaum *et al.* 1983; Diller and Wallace 1996; Welsh and Lind 1996). They are most frequently found in seeps, springs, and intermittent streams (Welsh 1993; Vesely 1996; Olson, *in litt.* 1999) or shallow water seeping through moss-covered gravel (Nussbaum *et al.* 1983) and appear to avoid open deep water channels (Stebbins 1985; Welsh 1993). The aquatic larvae usually occur in loose gravel in streambeds, and semiaquatic adults can be found next to larvae in streams, or under rocks or debris in saturated streamside habitats (Nussbaum and Tait 1977; Nussbaum et al. 1983).

The southern torrent salamander is very sensitive to desiccation (losing moisture through the skin) (Ray 1958) and cannot move far from moist areas. Movements of the southern torrent salamander have been estimated from 1 to 2.2 m (3 to 6 ft) per year (Welsh and Lind 1992) up to 50 m (160 ft) per year from permanent water (Good and Wake 1992). These larger movements, however, are thought to be rare (Good and Wake 1992). Southern torrent salamanders have also been found short distances from water after heavy rains (Nussbaum et al. 1983). Riparian areas are thought to be important to the species for foraging (Corn and Bury 1989) and courtship and reproduction (Nussbaum *et al.* 1983). If terrestrial visits are important for feeding, reproduction, and dispersal, then shade and high surface water availability are needed to allow for movement within these riparian areas.

Southern torrent salamanders can grow to approximately 9.5 centimeters (3.75 inches) in length (Good and Wake 1992). They have a low tolerance for high temperatures and are typically found in areas with temperatures between 5.8 and 12.0 degrees centigrade (°C) (10 to 22 degrees Fahrenheit (°F)) (Brattstrom 1963; Nussbaum et al. 1983). Lethal temperatures occur above 17.2 °C (63 °F) (Welsh and Lind 1996).

Southern torrent salamanders have a lengthy larval period of 3 to 3.5 years (Nussbaum and Tait 1977) and require an additional 1 to 1.5 years after metamorphosis to become sexually mature (Nussbaum and Tait 1977). Southern torrent salamanders are probably communal nesters, as other torrent salamanders may be (Nussbaum 1969), producing an average of 8.4 to 10.0 eggs each year (Nussbaum et al. 1983). The southern torrent salamander's food is primarily aquatic and semiaquatic invertebrates (Bury and Martin 1967).

The spaces between cobble or pebble-size stones found in streams appear to provide refuge for salamanders from predators, such as fish and Pacific giant salamanders (*Dicamptodon ensatus*). Southern torrent salamanders are not frequently found in streams where large Pacific giant salamanders or fish are found. If southern torrent salamanders do occur in these streams, they are usually found in the margins where they can find cover, away from the deep pools and glides (Welsh 1993; Welsh and Olivier 1992; Welsh, pers. comm. 1995; Olson, pers. comm. 1995). Another potential predator of salamanders may include garter snakes (Nussbaum *et al.* 1983.)

Southern torrent salamanders have a patchy distribution across their range (Welsh and Lind 1992). Suitable habitat is naturally limited by the geology and topography of an area. While the southern torrent salamander may be locally abundant in certain areas, salamander populations are not found in all apparently suitable habitats. During surveys of apparently suitable habitats, researchers detect southern torrent salamanders only 20 to 80 percent of the time. This low level of detection may be due to the fact that random sampling techniques of suitable habitats may not provide an accurate picture of the southern torrent salamander occurrence due to the inherent patchiness of their distribution. Populations of the species may be disjunct due to geographical variations, microhabitat variability, or historical land management practices. Density estimates range widely from 0.04 individuals up to 41 individuals per square meter (11 square feet) (Nussbaum and Tait 1977; Corn and Bury 1989).

The range of the southern torrent salamander occurs within the coastal conifer forest belt of northern California and southern Oregon, specifically from southern Mendocino County, California, through the Coast Ranges, to the Little Nestucca River and the Grande Ronde Valley in Polk, Tillamook, and Yamhill Counties, Oregon (Good and Wake 1992). An isolated population exists on the west slope of the Cascade Mountains near Steamboat in Douglas County, Oregon, approximately 112 kilometers (70 miles) inland (Good and Wake 1992; B. Bury, National Biological Survey, pers. comm. 1995). Several new populations of southern torrent salamanders have been detected north of the Steamboat population on the south side of the Willamette River. These populations represent an extension of the known range (R.S. Wagner, United States Geological Service, Biological Research Division, pers. comm. 1998). Another disjunct population is thought to occur in south central Siskiyou County, California, based on specimens in the Chico State University Museum that date back to the 1950s (H. Welsh, Forest Service, pers. comm. 1994). Good and Wake (1992) described this species as one of the most common members of the salamander fauna through much of its range.

According to the petitioner, 98 percent of the historical records of the southern torrent salamander in the Museum of Vertebrate Zoology (MVZ), University of California, Berkeley, represent only 42 populations detected in protected rights-of-way, county highways, or in State and national parklands that include less than 5 percent of the total range of the species. The MVZ records were collected from 1935 to 1989, with the majority (70 percent) collected after 1970. Our review of these records revealed approximately 151 sites where southern torrent salamanders were detected. The most recent location data obtained for this review, from a variety of formal and informal surveys conducted from 1987 to 1998, indicated approximately 781 sites containing southern torrent salamanders across its historical range from north-central Oregon to northern California. We expect some overlap in the sites documented in these two groups of data, but the level of overlap has not been analyzed. In addition, we have not attempted to define populations from this location information. Surveys for southern torrent salamanders across their range were conducted by Good and Wake (1992) and Wagner (*in litt.* 1998) and, in California, by Welsh (Welsh 1990; Welsh and Lind 1992; Welsh, *in litt.* 1998). According to Wake (University of California, pers. comm. 1995), southern torrent salamanders are found throughout their historical range.

Threats Analysis

Habitat

The petition to list the southern torrent salamander cited habitat fragmentation, population declines, and inhibited dispersal capability throughout the species' range as significant threats to the species. The petitioner suggested that large-scale timber harvesting is eliminating many subpopulations through destruction of required habitats. The petitioner further suggested that this species may require conditions and attributes unique to headwater streams in mature and old-growth forests and the species has minimal ability to withstand and recover from radical habitat alterations.

Evidence indicates that timber harvesting and road building negatively affect habitat requirements of the

southern torrent salamander (permanent water, rocky substrates, and low water temperatures). The direct effects of these activities include disturbance of substrate and killing of individual salamanders. Indirect effects include sedimentation of substrate used by the salamanders, increase in water temperatures to lethal levels, potential loss of permanent water flow, and potential increase in predator populations. Suitable habitat conditions and attributes for the southern torrent salamander appear to be more readily available in unlogged mature and old-growth forests than in logged areas (Welsh 1990; Diller 1996). In logged areas, the abundance of salamanders is lower or they are not detected at all, which indicates that logging may depress or locally extirpate these populations (Corn and Bury 1989; Welsh and Lind 1992). However, while some research has revealed negative impacts of logging and road construction on southern torrent salamander populations, other research and survey information indicates southern torrent salamanders still persist in some habitats that were logged 14 to 60 years ago (Nussbaum and Tait 1977; Corn and Bury 1989; Welsh and Lind 1992; Olson, *in litt.* 1994; Chinnici, *in litt.* 1995; Diller, *in litt.* 1995; Pious, *in litt.* 1995; Wright, *in litt.* 1995; J. Ambrose, Georgia-Pacific Corporation, pers. comm. 1995; J. Applegarth, Bureau of Land Management (BLM), pers. comm. 1995; S. Hopkins, BLM, pers. comm. 1995; K. Wright, BLM, pers. comm. 1995). Whether the species is recolonizing these areas or whether its long lifespan enables it to persist in marginal habitats until conditions improve is unknown. Factors that may mitigate lethal water temperatures in logged areas include the retention of deciduous vegetation and unmerchantable trees, cool water from underground springs, cool microclimates on north-or east-facing slopes, and coastal fog. Sedimentation of the substrate may be mitigated by the flushing of these sediments in higher gradient streams. Some research has reported a positive relationship between stream gradient and the presence of southern torrent salamanders in logged habitats (Welsh 1993; Welsh and Ollivier 1992; Diller 1996). The southern torrent salamander may also be capable of burrowing vertically in the substrate to find moist, cool conditions.

We agree that widespread logging of headwater habitats has negative impacts on southern torrent salamander populations through the destruction of suitable habitats. However, under certain circumstances, populations appear to be persisting in altered habitats. We also believe that State and Federal agencies provide varying degrees of protective measures for maintaining aquatic and riparian habitats on forested lands (California Department of Forestry (CDF) 1992; USDA *et al.* 1993; Oregon Department of Forestry (ODF) 1994; USDA and USDI 1994a). The threat to this species from habitat destruction is directly related to protection provided by State, Federal, and private regulatory measures for timber harvest activities.

Federal Regulations for Timber Harvest

The trend of large-scale logging of mature and old-growth forests on public lands within the range of the southern torrent salamander has diminished since the Federal listing of the northern spotted owl (*Strix occidentalis caurina*) in 1990 (55 FR 26192). This trend toward lower timber production and less regeneration logging is reflected in the standards and guidelines for land management in the Record of Decision for the Northwest Forest Plan (USDA and USDI 1994a) and in Endangered Species Act consultations by us on timber sales and National Forest Land Management Plans (A. Brickey, Service, pers. comm. 2000; N. Lee, Service, pers. comm. 2000). Although clearcutting could mean an increase in timber production on private lands, clearcutting vast areas within a drainage is generally no longer a common or commonly accepted practice. Forest ecosystems are typically able to recover from small-scale disturbances, and the effects of timber harvest diminish as forests regenerate.

Public Land Regulations

We estimate that approximately 41 percent of the total range of the southern torrent salamander occurs on federally managed public forest lands in both Oregon and California (summarized from Davis *et al.* 1998; Kagan *et al.* 1999). A Forest Conference was convened by President Clinton in 1993 to resolve forest resource issues in the Pacific Northwest. As a result, a group of interdisciplinary, interagency experts, known as the Forest Ecosystem Management Assessment Team (FEMAT), came together to develop a comprehensive management plan for more than 137,128 hectares (ha) (24 million acres (ac)) of public forest lands. The outcomes were the FEMAT Report (USDA *et al.* 1993), a Supplemental Environmental Impact Statement (SEIS) (USDA and USDI 1994b), and, ultimately, a Record of Decision (ROD) (USDA and USDI 1994a) that amended the planning documents of 19 national forests and 7 BLM Districts to implement an alternative that became known as the Northwest Forest Plan (Forest Plan). The FEMAT reports a total of 37 percent of the southern torrent salamander's range on Federal lands and 63 percent on State and private lands, an estimate very similar to that developed during this review (41 percent and 59 percent respectively).

One of the reasons identified in the petition to list the southern torrent salamander is a lack of protection for headwater habitats where this species is known to occur. The petitioner claims that 90 percent of the range of the southern torrent salamander is on lands that are harvestable or have been harvested. Referencing the FEMAT report, the petition states that ''37 percent of the range of this salamander occurs on Federal lands, while 27 percent is on lands in the matrix (harvestable areas).'' The petitioner's subsequent conclusion appears to be that the 27 percent of the total range of the species that occurs on public lands, plus the 63 percent of the species' range occurring on private lands (90 percent of the species' complete range) is open to harvest or has been harvested. We do not agree with this interpretation of the FEMAT report. Appendix Table IV–C–9 in the FEMAT report indicates that the percentage of land designated as matrix under the Forest Plan represents 25 percent of the 37 percent of the range that occurs on public lands (USDA *et al.* 1993). This amount is equal to less than 10 percent of the entire range of the species. The remaining 75 percent of the species' range on public lands occurs almost entirely in withdrawn areas or reserves (approximately 68 percent) and Adaptive Management Areas (approximately 6 percent) (USDA *et al.* 1993).

Furthermore, as described in the FEMAT report, the SEIS, and the ROD, all aquatic/riparian habitats on public lands covered by the Forest Plan are to be protected in riparian reserves. This means that any land allocations designated in the FEMAT report, including matrix lands, that include aquatic or riparian habitat are contained in riparian reserves that are designed to protect riparian and aquatic components from actions that will negatively impact them (M. Raphael, Forest Service, pers. comm. 1995). Therefore, the 27 percent figure quoted in the petition as salamander habitat that is at risk within matrix lands fails to take into account the riparian reserves protecting watercourses in the matrix (K. Denton, Forest Service, pers. comm. 1995). Riparian reserves apply to all streams,

lakes, ponds, and wetlands on Forest Service and BLM lands within the range of the northern spotted owl (USDA and USDI 1994b). The primary purpose of riparian reserves is to protect and maintain riparian resources and to attain the objectives of the Aquatic Conservation Strategy, which is part of the Forest Plan. This strategy is specifically designed to protect headwater tributaries (including intermittent streams, seeps and springs) and riparian areas (USDA *et al.* 1993; USDA and USDI 1994a).

The FEMAT report provides the most current risk analysis of the southern torrent salamander on public lands and states that implementation of the Forest Plan, as approved, would result in a very high likelihood that the majority (74 percent) of southern torrent salamander habitats on public lands would be well distributed and that the species population could stabilize, although with some limitation on interactions among populations. This analysis was based on the anticipated level of riparian protection in riparian reserves. The final ROD later doubled the riparian reserve widths for intermittent streams and wetlands of less than 1 ha (2.4 ac) from 15 to 30 m (50 to 100 ft) or one site-potential tree (the average height of a tree growing at that site). This change would protect more southern torrent salamander habitat than evaluated in the FEMAT report.

The Forest Plan has been in effect since April 1994. As of 1995, riparian reserves were generally being planned according to the intent of the Forest Plan (M. Boroja, Service, pers. comm. 1995; A. Brickey, pers. comm. 1995; P. Henson, Service, pers. comm. 1995; S. Livingston, Service, pers. comm. 1995). The land management agencies recognized that the procedure to adjust or decrease the widths of riparian reserves recommended in the Forest Plan was time-consuming, and, therefore, they did not generally pursue efforts to alter the widths. Additionally, it appeared that many riparian reserves were increased due to unstable geology. An interagency monitoring program in 1996 and 1997 evaluated whether the intent of the ROD and its guidelines was being met. Reports from both years concluded that the Forest Service and BLM were consistently meeting the intent of the ROD in developing riparian reserves.

The petitioner suggested that no-entry buffers of 33 m (100 ft) or the height of one site-potential tree should be established around small streams and headwaters in old-growth and mature conifer forests. In the Pacific northwest, timber harvest adjacent to old-growth forests is estimated to affect the microclimate up to two tree lengths into the remaining forest stands (Franklin and Forman 1987 *in* Lehmkulh and Ruggiero 1991; Harris 1984). Other estimates include microclimate effects from 30 to 240 m (approximately 100 to 800 ft) into interior forest, depending on the site and specific microclimate parameters (Chen *et al.* 1995 *in* Vesely 1996). There is general agreement that a protected buffer zone for streams, seeps, springs, and adjacent riparian habitat is necessary to maintain microclimates and prevent sedimentation in these watercourses. Based on the evidence that southern torrent salamanders appear to stay in very close proximity to watercourses, we believe the riparian reserve system of the currently adopted and court-tested Forest Plan provides adequate protective measures to maintain the quality of most of the riparian and aquatic habitats for the southern torrent salamander on public lands across the range of the species.

California Private Land Regulations

Approximately 26 percent of the southern torrent salamander's entire range occurs on private lands in California and 2 percent on California State lands. This species is designated as a species of special concern in California. Special concern status confers no legal protection for the species, but recognizes that the species should be closely monitored. In response to a 1994 petition to list the southern torrent salamander as threatened under State law, the California Fish and Game Commission (CFGC), in conjunction with California Department of Fish and Game (CDFG), determined on January 8, 1996, that listing the species as threatened was not warranted (CFGC, *in litt.* 1996). This decision was based on the presence of southern torrent salamanders in degraded habitat, improved logging practices, and inadequate information on the significance and causes of any population declines. However, these agencies improved protective measures for this species through changes in policies and regulations.

During the candidacy period (the period between the time a petition is accepted by the State and a final determination is required) from November 1994 to December 1995, training was provided to 64 biologists, 231 private foresters, and 60 CDF inspectors on how to recognize southern torrent salamander habitat and conduct surveys. The CDFG reported the following objectives for the 1-year candidacy period: (1) document as many existing localities as possible on private land and at historic sites; (2) determine status of populations and habitat (and metapopulation structure); (3) examine population trends through the comparisons of managed and unmanaged lands; and (4) determine the adequacy of current forest practice rules to protect the species and its habitat (CDFG, *in litt.* 1995). A sampling protocol was developed to collect data to meet these objectives (CDFG *in litt.* 1995). However, to date, we are unaware of any results from objectives 2, 3, or 4 of the candidacy period.

Most of the suitable habitat for the southern torrent salamander occurs in what the CDF designates as Class II streams, which include perennial streams that are non-fish bearing but contain other aquatic life (CDF 1992). Protections for Class II streams include 15 to 30 m (50 to 100 ft) Watercourse and Lake Protection Zones (WLPZ) that retain at least 50 percent canopy closure, 25 percent overstory conifers, and 75 percent surface cover. No heavy equipment is allowed within the WLPZ, and roads, landings, and timber falling are limited to protect the beneficial uses of the watercourse. Any changes in the widths of the WLPZ or proposed activities within the WLPZ must first be carefully analyzed and reviewed to ensure protection of the beneficial uses of the stream. Some persons have speculated that Class II protection may be adequate to protect the southern torrent salamander and its habitat in the coastal forests but may not provide adequate protection in the more arid southern and eastern portions of the range (J. Brode, CDFG, pers. comm. 1994, Steele, CDFG, pers. comm. 1995).

We are aware that stream classification is highly subjective in the timber planning process. Habitat for southern torrent salamanders may also occur along streams that have been classified as Class III (streams, including seeps and springs, with no aquatic life but capable of sediment transport). In these areas, obvious aquatic life may not be apparent, the streams may appear dry, and they may not contain obvious channels or pools. Although these appear to be Class III streams, they may often provide suitable habitat for, and contain, the southern torrent salamander. The water level may be just above the surface or subsurface, and salamanders may not be detectable at all times of year. Incorrect classification of streams could potentially result in application of Class III stream protection measures being applied to habitats that are likely to contain southern torrent salamanders. Current protection for Class III streams is not adequate to

protect southern torrent salamander habitat (CFGC 1994).

The training of biologists and foresters resulted in some increased awareness of the significance of headwater streams, seeps, and springs as valuable aquatic habitats requiring Class II protection. Based on over a decade of field experience in habitat identification and stream classification in California, K. Moore (CDFG, pers. comm. 2000) estimates that perhaps 50 percent of suitable seep, spring, and stream habitat has been recognized and given some level of protection from logging activities. However, some seeps and springs that have not been identified as salamander habitat and retain no comprehensive protection under the State rules are still logged and burned (K. Moore, pers. comm.1999).

We support a review of the Forest Practice Rules by CDFG and believe that Class II protection has the potential to provide some protection for the southern torrent salamander provided habitat is correctly identified. However, we are concerned about the effectiveness of timber harvest planning on private lands because of (1) the high ratio of Emergency and Exemption Notices to regular Timber Harvest Plans (THP) in California, (2) cumulative impacts not being addressed in THPs, and (3) a lack of THP enforcement (State of California 1994).

Oregon Private Land Regulations

Private lands in Oregon constitute approximately 31 percent of the southern torrent salamander's entire range. One percent of the salamander's range occurs on Oregon State lands. The salamander is designated as a sensitive species, subcategory vulnerable, by the State of Oregon. State sensitive classification refers to naturally reproducing native species that are likely to become threatened or endangered throughout all or any significant portion of their range in Oregon (Oregon Department of Fish and Wildlife (ODFW) 1993). The vulnerable category implies that listing the species is not imminent provided that continued or expanded use of protective measures and monitoring occurs (ODFW 1993). However, the southern torrent salamander is protected from being killed, harmed, or collected under the Oregon Administrative Rule section 635–44–130 (Nongame Wildlife Protected) (ODFW 1991). A State scientific collecting permit is required to take this species from the field for educational or research purposes (ODFW 1991).

Oregon Department of Forestry (ODF) rules establish Riparian Management Areas (RMAs) adjacent to all Type D streams (non-fish-bearing streams with domestic water use) and Type N streams (all other streams except those fish-bearing streams with domestic water use), except for small Type N streams. The goal of these buffers is to protect water quality, hydrological function, and fish and wildlife habitat by requiring vegetation retention and special management practices. The RMAs range from 6 to 21 m (20 to 70 ft) and have retention standards for understory, overstory, snags, and logs. Further restrictions occur on road construction, yarding, stream crossings, and stream improvement. The RMAs offer some protection from direct impacts, but the protections may be too small to compensate for the effects on microclimates from logging. The areas most at risk are the small Type N streams where no RMAs are required and restrictions of logging activities are very flexible and left up to the operator's discretion in most cases. The few specific management recommendations for small Type N streams do not apply to the Coast Range and South Coast geographic regions, where the majority of the southern torrent salamander range occurs.

RMAs are not required for seeps and springs within the range of the southern torrent salamander in Oregon. The Oregon Forest Practice Rules state that operators shall protect hydrological functions of seeps, springs, and wetlands by minimizing disturbance to soils during forest operations (ODF 1994). The ODF interprets this rule to mean that no machinery is allowed in seeps, springs, or wetlands, and citations have been issued for this violation (J. Runion, ODF, pers. comm. 1995). Furthermore, the Oregon Forest Practice Rules recognize that amphibians may occur in small Type N streams and encourage operators to retain green trees and snags in blocks of intact vegetation of undetermined size (ODF 1994). The headwater habitats on private land in Oregon are probably not completely protected from the effects of logging, and some biologists in Oregon have expressed concerns about this lack of protection (J. Boechler, ODFW, pers. comm. 1995; R. Krahmer, ODF, pers. comm. 1995; C. Puchy, ODFW, pers. comm. 1995; K. Wright, pers. comm. 1995).

We believe that existing regulatory measures provide varying degrees of protection for southern torrent salamander habitat on public and private lands. The regulatory protection of aquatic and riparian habitat appears to be generally better on public lands than private lands and better for streams than for seeps and springs. If we assume that southern torrent salamander habitat on all Federal lands (41 percent of the total range) has moderate to good protection, that approximately 50 percent of private land in California (13 percent of the total range) and 50 percent of private land in Oregon (16 percent of the total range) and all State lands (3 percent of the total range) have low to moderate protection, then 73 percent of the total range of the species is estimated to have some level of regulatory protection.

Although logging began in Pacific Northwest forests almost 200 years ago, State and Federal land management regulations that protect aquatic and riparian habitats have only been instituted in the last 20 to 30 years. Consequently for approximately 170 years, timber harvest in aquatic and riparian habitats was virtually unregulated. Therefore, some populations of southern torrent salamanders have persisted or recolonized in areas that had no protective buffers when they were harvested. Whether these individuals recolonized the area after regrowth of the surrounding vegetation or survived the habitat alteration is unclear. While the presence of individuals does not necessarily indicate viable populations, what is known is that both larvae and adults are being detected across the range of the species.

Based on the species' persistence, the fact that some level of regulatory protection occurs on an estimated three-quarters of the species' range, and the current trend in timberland management is away from clearcutting in riparian areas and toward increasing awareness of the significance of headwater habitats, we believe that current regulatory practices, while not ideal, provide sufficient protection to insure that the existence of the species is not threatened at this time. While recent improvements in protections of southern torrent salamander habitats have been implemented on Federal lands, habitats on private lands are still vulnerable until specific changes in policy and procedures change the way these habitats are protected. However, future trends toward protecting aquatic habitats for listed salmonids, including headwater habitats, should also benefit the southern torrent salamander. Based on our assumptions stated above concerning estimated regulatory protections, and the fact that the species appears to be distributed across its range and is persisting in altered habitats, we also conclude that habitat destruction or modification is not severe enough to

threaten the existence of the species at this time or in the foreseeable future.

Genetics

The genus *Rhyacotriton* has always been perceived as genetically isolated from other genera of salamanders (Good and Wake 1992). Research by Good and others in 1987 (Good *et al.* 1987 in Good and Wake 1992) showed ''extreme and unexpectedly high levels of genetic differentiation'' for *Rhyacotriton olympicus,* which at that time was considered a single species over the Pacific Northwest. Good *et al.* (1987 in Good and Wake 1992) divided *Rhyacotriton* into four genetically different populations. Good and Wake (1992) concluded that four separate species should be recognized within the genus *Rhyacotriton,* one of which is *Rhyacotriton variegatus,* the southern torrent salamander.

The genetic diversity within the southern torrent salamander is evidence of very low gene flow between populations. Good and Wake (1992) suggest that gene flow between populations of southern torrent salamanders at the extreme ends of the species' range is not likely to occur, but that gene flow among adjacent populations of southern torrent salamanders is what holds the species together as a cohesive unit. In reference to southern torrent salamander populations, Wake (*in litt.* 1994) stated ''the genetic differentiation is strongly structured geographically, so that there is a pattern of isolation by distance. What this means is that genetic distance between populations builds directly as a function of geographic distance.'' In other words, as the geographical distance between populations increases, populations become more genetically different and isolated. This finding strongly implies that animals within each population seldom left their respective populations or moved between populations over a period of thousands of years (Wake, *in litt.* 1994). Therefore, southern torrent salamanders show a great deal of genetic differentiation between individual animals from different populations, but show very little differentiation between individuals within the same population.

Dr. Susan Haig and Steve Wagner of United States Geological Service in Corvallis, Oregon, have been conducting genetic studies on mitochondrial DNA sequences of the southern torrent salamander to investigate the extent of population divergence and the relationships among populations. The results of these studies will be evaluated after they have been peer-reviewed and published.

Because of the naturally low gene flow between southern torrent salamander populations and the great amount of genetic diversity between individuals within the species, the loss of subpopulations could mean a significant loss of genetic diversity. Low genetic diversity within a population or subpopulation is thought to decrease that group's ability to withstand catastrophic natural events or manmade impacts. We believe that the most vulnerable populations of southern torrent salamanders are those found on the southern and eastern edges of the range. These populations are suspected to be the most distinct genetically (Wake, *in litt.* 1994) and the most susceptible to the negative impacts of timber harvest. Although we recognize the implications of low genetic diversity for the southern torrent salamander, until adequate genetic studies are completed, information is lacking to make a determination that low genetic diversity and gene flow threaten the continued existence of the species. We will reevaluate this issue after results of ongoing genetic studies are available. However, we recommend that populations at the edge of the range be given high priority for determining population status and trends.

Conclusion

We recognize that the southern torrent salamander has very specific habitat requirements, a naturally patchy distribution across its range, and low gene flow between populations. The southern torrent salamander is not considered to be dependent solely on old-growth forests, but the preferred microclimate conditions are more readily available in mature and old-growth forests. We acknowledge that logging of headwater habitats in old-growth forests has depressed or extirpated some populations of this species. However, we believe that the trend of habitat loss for the southern torrent salamander is lessening across much of the range with a reduction in clearcutting and with some increased awareness and some protections of headwater habitats. The southern torrent salamander is present throughout its historical range, including populations in altered habitats, despite little or no stream protection at the time they were logged. Relevant ongoing research is being conducted on headwater habitats and the southern torrent salamander, but a current lack of general baseline information exists on population status and trends, and genetic diversity of the species.

On the basis of the best available scientific and commercial information, we find that the southern torrent salamander is not likely to become an endangered species within the foreseeable future throughout all or a significant portion of its range. Therefore, listing the species as threatened is not warranted at the present time. The southern torrent salamander will remain as a species of concern for which evidence of vulnerability exists, but for which substantial data are lacking to support a proposal to list as threatened or endangered. We will continue to seek information on the status of the southern torrent salamander, and, if information becomes available indicating that listing as endangered or threatened is appropriate, we would propose to list the salamander. Furthermore, we retain the option of recognizing a subspecies or a population segment for listing should information become available indicating that such an action is appropriate and warranted.

References Cited

A complete list of all references cited herein is available on request from the Sacramento Fish and Wildlife Office (see **ADDRESSES** section).

Author. The primary author of this notice is Ann Chrisney, Sacramento Fish and Wildlife Office (see **ADDRESSES** section).

Authority: The authority for this section is the Endangered Species Act of 1973, as amended (16 U.S.C. 1531 *et seq.*).

Dated: May 31, 2000.

Jamie Rapaport Clark,

Director, U.S. Fish and Wildlife Service.

[FR Doc. 00–14084 Filed 6–5–00; 8:45 am]

BILLING CODE 4310–55–P

DEPARTMENT OF THE INTERIOR

National Park Service

National Register of Historic Places;Notification of Pending Nominations

Nominations for the following properties being considered for listing in the National Register were received by the National Park Service before May 26, 2000. Pursuant to § 60.13 of 36 CFR part 60 written comments concerning the significance of these properties under the National Register criteria for evaluation may be forwarded to the National Register, National Park Service, 1849 C St. NW., NC400, Washington, DC

20240. Written comments should be submitted by June 21, 2000.

Carol D. Shull,

Keeper of the National Register.

ALABAMA

Jefferson County

Belview Heights Historic District, Roughly along 41st, 42nd, 43rd, 44th and 45th Sts., and M and Martin Aves., Birmingham, 00000713

Lakewood Historic District, Roughly bounded by Lee Ave., 82nd St., Spring St., and 80th St., Birmingham, 00000710

Lawrence County

Ice House, 844 Seminary St., Moulton, 00000712

Tallapoosa County

Alexander City Commercial Historic District, Portions of Broad, Main, Green, Alabama, Jefferson Sts. and Courthouse Sq. Alexander City, 00000711

GEORGIA

Chatham County

Vernonburg Historic District, Dancy Ave., Rockwell Ave. and S. Rockwell Ave., Vernonburg, 00000714

INDIANA

Elkhart County

Beardsley, Dr. Havilah, House, 102 W. Beardsley Ave., Elkhart, 00000716

St. Joseph County

Wenger, Martin, Farmhouse, 701 E. Pennsylvania, South Bend, 00000715

LOUISIANA

Rapides Parish

Mt. Olivet Episcopal Church and Cemetery, 335 Main St., Pineville, 00000718

St. Tammany Parish

Tchefuncte Site, Address Restricted, Mandeville, 00000717

PENNSYLVANIA

Montgomery County

Hunsberger, Isaac, House, 545 W. Ridge Pike, Limerick Twp., 00000719

RHODE ISLAND

Newport County

Sakonnet River Bridge, RI 24, Portsmouth, 00000720

SOUTH DAKOTA

Brookings County

Volga Auditorium (Federal Relief Construction in South Dakota MPS), 212 Kasan Ave., Volga, 00000723

Codington County

Watertown Stadium (Federal Relief Construction in South Dakota MPS), 1600 W Kemp Ave., Watertown, 00000721

Jerauld County

Alpena Bathhouse and Swimming Pool (Federal Relief Construction in South Dakota MPS), Jct. of Fifth and Main, Alpena, 00000727

Meade County

Municipal Building—City Hall (Federal Relief Construction in South Dakota MPS), 206 Main St., Faith, 00000722

TENNESSEE

Giles County

Campbell Chapel African Methodist Episcopal Church (Rural African-American Churches in Tennessee MPS), Pulaski, Pulaski, 00000725

Grainger County

Henderson Chapel African Methodist Episcopal Zion Church (Rural African-American Churches in Tennessee MPS), Church St., Rutledge, 00000730

Lincoln County

Mount Zion Missionary Baptist Church (Rural African-American Churches in Tennessee MPS), 305 W. Maple St., Fayetteville, 00000731

Loudon County

Hackney Chapel AME Zion Church (Rural African-American Churches in Tennessee MPS), Address Restricted, Lenoir City, 00000729

McMinn County

Beth Salem Presbyterian Church (Rural African-American Churches in Tennessee MPS), TN 30 at Watson Rd., Athens, 00000728

UTAH

Washington County

Jepson, James, Jr., House, 15 East Jepson, Virgin, 00000732

WISCONSIN

Columbia County

Lodi Street-Prairie Street Historic District, Roughly Prairie St. from Second St. to Mill St., Lodi, 00000735

Kenosha County

Library Park, 711 59th Place, Kenosha, 00000733

Wood County

West Park Street Historic District, 300–417 West Park St., Marshfield, 00000734

A request for removal for procedural error has been made for the following resource:

IOWA

Jefferson County

Commercial Block (Louden Machinery Company, Fairfield Iowa MPS), 106,108,110 N, Main St. Fairfield, 99000120

[FR Doc. 00–14210 Filed 6–5–00; 8:45 am]

BILLING CODE 4310–70–P

DEPARTMENT OF THE INTERIOR

Bureau of Reclamation

Flaming Gorge Dam, Colorado River Storage Project, Utah

AGENCY: Bureau of Reclamation, Interior.

ACTION: Notice of intent to prepare a draft environmental impact statement and announcement of public scoping meetings.

SUMMARY: The Bureau of Reclamation (Reclamation), the federal agency with administrative and regulatory authority over Flaming Gorge Dam, intends to prepare a draft environmental impact statement (EIS) pursuant to section 102(2)(c) of the National Environmental Policy Act of 1969 (NEPA), as amended, 42 United States Code (U.S.C.) 4332. The EIS will describe the effects of operating Flaming Gorge Dam to achieve the flows recommended by the Recovery Implementation Program for Endangered Fish Species in the Upper Colorado River Basin (Recovery Program), and comply with section 7 of the Endangered Species Act. The purpose of the proposed action is to protect and assist in the recovery of the populations and designated critical habitat of the four endangered fishes [razorback sucker (*Xyrauchen texanus*), Colorado pikeminnow (*Ptychocheilus lucius*), humpback chub (*Gila cypha*), and bonytail (*Gila elegans*)] that are found in the Green and Colorado River Basins, so that along with other activities in the Recovery Implementation Program Recovery Action Plan (Recovery Action Plan), the fish no longer require protection under the Endangered Species Act, while continuing the other authorized purposes of the Flaming Gorge Unit of the Colorado River Storage Project.

DATES AND ADDRESSES: Public scoping meetings will be held in mid-July in Salt Lake City, Vernal, and Fort Duchesne, Utah; Grand Junction, Colorado; and Rock Springs, Wyoming, to solicit public input regarding relevant environmental issues that should be addressed in the EIS. The schedule of scoping meetings is as follows:

- July 11, 2000, 6–9 p.m., Wyndham Hotel, 215 West South Temple, Salt Lake City, Utah.
- July 12, 2000, 6–9 p.m., Rock Springs Holiday Inn, 1675 Sunset Drive (I–80 Exit 102), Rock Springs, Wyoming.
- July 13, 2000, 6–9 p.m., Adam's Mark Hotel, 743 Horizon Drive (I–70 Exit 31), Grand Junction, Colorado.
- July 18, 2000, 6–9 p.m., Western Park Convention Center, 300 East 200 South, Vernal, Utah.

• July 19, 2000, 6–9 p.m., Ute Tribal Headquarters, 988 South, 7500 East, Fort Duchesne, Utah.

Each scoping meeting will begin with a one-hour open house where the public can view exhibits, informally discuss issues, and ask questions of staff and managers. The open house will be followed by a more formal scoping hearing in which each participant will be given time to make official comments. The comments will be formally recorded. Speakers are encouraged to provide written versions of their oral comments, and any other additional written materials, for the record. Comments should focus on the issues relevant to the proposed action.

Comments may also be sent directly to Mr. Kerry Schwartz at the Bureau of Reclamation's Provo Area Office in Provo, Utah. Written comments should be received no later than September 5, 2000, to be most effectively considered.

Those not desiring to submit comments or suggestions at this time, but who would like to receive a copy of the draft EIS, should write to Mr. Kerry Schwartz. When the EIS is complete, its availability will be announced in the **Federal Register**, in the local news media, and through direct contact with interested parties. Comments will be solicited on the document.

Our practice is to make comments, including names and home addresses of respondents, available for public review. Individual respondents may request that we withhold their home address from public disclosure, which we will honor to the extent allowable by law. There also may be circumstances in which we would withhold a respondent's identity from public disclosure, as allowable by law. If you wish us to withhold your name and/or address, you must state this prominently at the beginning of your comment. We will make all submissions from organizations or businesses, and from individuals identifying themselves as representatives or officials of organizations or businesses, available for public disclosure in their entirety.

The Bureau of Reclamation ensures meeting accessibility to persons with disabilities. If you need special assistance, please contact Kate O'Hare of the Bureau of Reclamation's Provo Area Office at (801) 379–1276.

FOR FURTHER INFORMATION CONTACT: Mr. Kerry Schwartz, Environmental Protection Specialist, Bureau of Reclamation, Provo Area Office, 302 East 1860 South, Provo, Utah 84606–7317; telephone (801) 379–1167; faxogram (801) 379–1159; email: Kschwartz@uc.usbr.gov. Information about the proposed action and the EIS process can also be found on Reclamation's web site at http://www.usbr.gov.

SUPPLEMENTARY INFORMATION:

Background

Flaming Gorge Dam, located on the Green River in northeastern Utah, is an authorized storage unit of the Colorado River Storage Project. The dam was authorized for construction by the Colorado River Storage Project Act of 1956 (Public Law 84–485). The underlying project purposes are defined by section 1 of the Act (43 U.S.C. 620) which authorized the Secretary of the Interior to ''construct, operate, and maintain'' Flaming Gorge Dam:

> . . . for the purposes, among others, of regulating the flow of the Colorado River, storing water for beneficial consumptive use, making it possible for the States of the Upper Basin to utilize, consistently with the provisions of the Colorado River Compact, the apportionments made to and among them in the Colorado River Compact and the Upper Colorado River Basin Compact, respectively, providing for the reclamation of arid and semiarid land, for the control of floods, and for the generation of hydroelectric power, as an incident of the foregoing purposes. . . .

In 1968, Congress enacted the Colorado River Basin Project Act (43 U.S.C. 1501 *et seq.*). This Act provided for a program for further comprehensive development of Colorado River Basin water resources. Section 1501(a) states:

> This program is declared to be for the purposes, among others, of regulating the flow of the Colorado River; controlling floods; improving navigation; providing for the storage and delivery of the waters of the Colorado River for reclamation of lands, including supplemental water supplies, and for municipal, industrial, and other beneficial purposes; improving water quality; providing for basic public outdoor recreation facilities; improving conditions for fish and wildlife, and the generation and sale of electrical power as an incident of the foregoing purposes.

In addition, the Criteria for Coordinated Long-Range Operation of Colorado River Reservoirs (including Flaming Gorge Dam) were mandated by section 1552 of the Colorado River Basin Project Act. Article I.(2) of the criteria requires that the Annual Operating Plan for Colorado River reservoirs ''. . . shall reflect appropriate consideration of the uses of the reservoirs for all purposes, including flood control, river regulation, beneficial consumptive uses, power production, water quality control, recreation, enhancement of fish and wildlife, and other environmental factors.''

Construction of Flaming Gorge Dam was completed in 1964 and full operation of the dam and reservoir began in 1967. The powerplant began commercial operation in 1963. The Bureau of Reclamation operates the powerplant located at the base of the dam and the Western Area Power Administration (Western) markets the power.

Reservoir releases through the powerplant currently range from 800 to 4,700 cubic feet per second (cfs). Reclamation established interim operating criteria for Flaming Gorge Dam in September 1974. Under those interim criteria, Reclamation agreed to provide a minimum flow of 400 cfs at all times. Continuous flows of 800 cfs were to be provided for the foreseeable future and under normal conditions. Continuous flows exceeding 800 cfs were to be provided when compatible with other Colorado River Storage Project reservoir operations. The 800 cfs and higher continuous flows were intended to enhance fishing, fish spawning, and boating. Maximum releases (approximately 4,700 cfs) are constrained by generator output and reservoir elevation. In addition, the dam has the capacity to release up to 4,000 cfs through two river outlet tubes that bypass the powerplant, and an additional 28,800 cfs can be released through the spillway. In 1979, Reclamation began releasing water through a multi-level outlet structure to provide warmer water for the downstream fishery.

On February 27, 1980, the Fish and Wildlife Service (Service) requested consultation under section 7 of the Endangered Species Act regarding projects under construction, and for the continued operation of all existing Reclamation projects in the Upper Colorado River Basin (including the Colorado River Storage Project). Formal consultation on operation of Flaming Gorge Dam was initiated on March 27, 1980. Reclamation is the lead agency for the consultation, with Western becoming a party to the consultation in 1991.

Coincident with its request for consultation on the operation of Reclamation projects in the Upper Colorado River Basin, the Service issued a Final Biological Opinion for the Strawberry Aqueduct and Collection System, a major feature of the Central Utah Project, on February 27, 1980. The biological opinion determined that Strawberry Aqueduct Collection System flow depletions from the Duchesne and Green Rivers would likely jeopardize the continued existence of the endangered Colorado pikeminnow and

humpback chub. The biological opinion included a reasonable and prudent alternative (RPA) to avoid continued jeopardy to the endangered fish. The RPA was that Flaming Gorge Dam and Reservoir would compensate for those depletions and would be operated for the benefit of the endangered fish in conjunction with its other authorized purposes.

The Service rendered other biological opinions for the Upalco, Jensen, and Uinta Units of the Central Utah Project during the late 1970s and early 1980s that all relied on the operation of Flaming Gorge Dam to provide flows for endangered fishes. Recent biological opinions for the Duchesne River Basin, Narrows Project, Price-San Rafael Salinity Control Project, and other water development related projects in the Colorado River Basin also rely on the operation of Flaming Gorge Dam to provide flows for endangered fishes.

However, because information related to the habitat requirements for the endangered fishes was unavailable, issuance of a final biological opinion by the Service for the operation of Flaming Gorge Dam was delayed until data collection and studies could be completed and used to recommend specific flows in the Green River downstream from the dam. Dam operations were initially evaluated for potential effects on endangered fishes from 1979 to 1984. Releases from the dam were modified from 1985 to 1991 to benefit endangered fishes and allow summer flow regimes in the Green River that could be tested and evaluated.

In 1987, the Recovery Program was initiated. The goals of the Recovery Program are to protect and recover the endangered fish species of the Upper Colorado River Basin so that they no longer need protection by the Endangered Species Act. The states of Colorado, Wyoming and Utah; Reclamation, Western, and the Service; and environmental, water, and power user organizations are all participants in the Recovery Program. Under the Recovery Program, there are five key elements needed to recover the endangered fish species: (1) Habitat management; (2) habitat development/maintenance; (3) native fish stocking; (4) non-native species and sport fish management; and (5) research, data management, and monitoring. The operation of Flaming Gorge Dam is essential to successful implementation of two of these five elements: habitat management and habitat development/maintenance. Operation of the dam is one of many management actions described in the Recovery Action Plan. Implementation of all Recovery Action Plan activities are expected to recover the endangered fish.

Using biological tests and evaluations conducted from 1979 to 1991, the Service issued a biological opinion on the operation of Flaming Gorge Dam on November 25, 1992. That opinion stated that the current (1992) operation of Flaming Gorge Dam was likely to jeopardize the continued existence of the endangered fish in the Green River. The opinion also described elements of an RPA that, in the opinion of the Service, would offset jeopardy to the endangered fishes. The RPA required: (1) Refinement of the operation of Flaming Gorge Dam so that flow and temperature regimes of the Green River more closely resembled historic conditions; (2) conducting a five-year research program including implementation of winter and spring research flows, beginning in 1992, to allow for potential refinement of flows for these seasons. The research program was to be based on the Five-Year Flaming Gorge Flow Recommendations Investigations which was approved by the Recovery Program. The research program was to provide for annual meetings to refine seasonal flows based on research findings and water year forecasts. Except for specific research flows during the five-year research program, year-round flows in the Green River were to resemble a natural hydrograph described under element 1 of the RPA; (3) determination of the feasibility and effects of releasing warmer water during the late spring/summer period and investigation of the feasibility of retrofitting river bypass tubes to include power generation, thereby facilitating higher spring releases; (4) legal protection of Green River flows from Flaming Gorge Dam to Lake Powell; and (5) initiation of discussions with the Service after conclusion of the five-year research program to examine further refinement of flows for the endangered Colorado River fish.

The five-year research program concluded in 1996. The Recovery Program funded a synthesis report of the research and development of the flow recommendations. The synthesis report and flow recommendations provide the basis for Reclamation's proposed action and for additional Section 7 consultation among Reclamation, Western, and the Service. Other threatened and endangered species that may be affected by implementation of the flow recommendations will be included in the discussions with the Service.

Purpose and Need for Action

The purpose of the proposed action is to protect and assist in the recovery of the populations and designated critical habitat of the four endangered fishes, while maintaining the other authorized purposes of the Flaming Gorge Unit of the Colorado River Storage Project. The proposed action is needed because:

1. The populations and critical habitat of endangered fishes have been adversely affected or modified by, among other things, operation of Flaming Gorge Dam.
2. Reclamation is required to avoid jeopardizing the continued existence of listed species, or destruction or adverse modifications to designated critical habitat, due to operation of Flaming Gorge Dam, to the extent possible, in conjunction with other purposes of the Flaming Gorge Unit (dam and reservoir).
3. All federal agencies are required to utilize their authorities in furtherance of the purposes of the Endangered Species Act by carrying out programs for the conservation of listed threatened and endangered species.
4. Operation of Flaming Gorge Dam is a key element of the Recovery Program's objectives of recovering the fish by offsetting the adverse effects of flow depletions from the Green River, and allowing water development in the Upper Colorado River Basin.
5. Flaming Gorge Dam is the primary water storage and delivery facility on the Green River upstream from the confluence with the Colorado River capable of providing sufficient flow management to allow opportunities to conserve endangered fish populations and protect critical habitat.
6. Operation of Flaming Gorge Dam serves as a reasonable and prudent alternative, as defined by the Endangered Species Act, to offset jeopardy to endangered fish and their critical habitat for numerous other existing or proposed water development projects in the Upper Colorado River Basin.

Proposed Action

Reclamation proposes to take action to protect and assist in the recovery of the four endangered fishes and designated critical habitat by modifying operations of Flaming Gorge Dam, to the extent possible, to achieve the recommended flows in the Green River, while continuing the other authorized purposes of the Colorado River Storage Project. Reclamation would implement the proposed action by modifying the operations decision process for Flaming Gorge Dam to provide water releases of sufficient magnitude and with the

proper timing and duration considered necessary to assist in the recovery of endangered fish and their designated critical habitat, while maintaining the other authorized purposes of the Flaming Gorge Unit of the Colorado River Storage Project.

The following table summarizes the final flow recommendation for the Green River described in the April 2000 *Flow Recommendations for Endangered Fishes in the Green River Downstream of Flaming Gorge Dam* report prepared by the Recovery Program. The flow recommendations are specific to three defined reaches of the Green River (from Flaming Gorge Dam to the Colorado River confluence), the period of the year (spring and summer through winter), and five annual hydrologic conditions (wet to dry), with base flows higher in wet years than in drier years.

BILLING CODE 4310–MN–P

RECOMMENDED MAGNITUDES OF SPRING PEAK AND SUMMER-TO-WINTER BASE FLOWS FOR ENDANGERED FISHES IN THE GREEN RIVER DOWNSTREAM FROM FLAMING GORGE DAM[A]

GREEN RIVER REACH	FLOW PERIOD	HYDROLOGIC CONDITIONS[B] AND FLOW RECOMMENDATIONS[C]				
		WET (0-10% exceedance)	MODERATELY WET (10-30% exceedance)	AVERAGE (30-70% exceedance)	MODERATELY DRY (70-90% exceedance)	DRY (90-100% exceedance)
Reach 1 Flaming Gorge Dam to Yampa River	Spring Peak Flow	**≥244 m³/s** (≥8,600 cfs)	**≥130 m³/s** (≥4,600 cfs)	**≥130 m³/s** (≥4,600 cfs)	**≥130 m³/s** (≥4,600 cfs)	**≥130 m³/s** (≥4,600 cfs)
	Summer-Winter Base Flow	**50-76 m³/s** (1,800-2,700 cfs)	**42-72 m³/s** (1,500-2,600 cfs)	**23-62 m³/s** (800-2,200 cfs)	**23-37 m³/s** (800-1,300 cfs)	**23-28 m³/s** (800-1,000 cfs)
Reach 2 Yampa River to White River	Spring Peak Flow	**≥748 m³/s** (≥26,400 cfs)	**≥575 m³/s** (20,300 cfs)	**≥527 m³/s[D]** (18,600 cfs) **≥235 m³/s[E]** (8,300 cfs)	**≥235 m³/s** (8,300 cfs)	**≥235 m³/s** (8,300 cfs)
	Summer-Winter Base Flow	**79-85 m³/s** (2,800-3,000 cfs)	**69-79 m³/s** (2,400-2,800 cfs)	**43-67 m³/s** (1,500-2,400 cfs)	**31-43 m³/s** (1,100-1,500 cfs)	**26-31 m³/s** (900-1,100 cfs)
Reach 3 White River to Colorado River	Spring Peak Flow	**≥1,104 m³/s** (≥39,000 cfs)	**≥680 m³/s** (≥24,000 cfs)	**≥623 m³/s[F]** (22,000 cfs) **≥235 m³/s[E]** (8,300 cfs)	**≥235 m³/s** (8,300 cfs)	**≥235 m³/s** (8,300 cfs)
	Summer-Winter Base Flow	**92-133 m³/s** (3,200-4,700 cfs)	**76-133 m³/s** (2,700-4,700 cfs)	**52-119 m³/s** (1,800-4,200 cfs)	**42-95 m³/s** (1,500-3,400 cfs)	**32-72 m³/s** (1,300-2,600 cfs)

[A] *Flow Recommendations for Endangered Fishes in the Green River Downstream of Flaming Gorge Dam*, April 2000, Final Report. Recovery Implementation Program for Endangered Fish Species in the Upper Colorado River Basin. See report for complete recommendations on magnitude, timing, and duration of flows and water temperatures.

[B] See *Flow Recommendations for Endangered Fishes in the Green River Downstream of Flaming Gorge Dam* for description of hydrologic conditions.

[C] Recommended flows as measured at the United States Geological Survey gage located near Greendale, Utah, for Reach 1; Jensen, Utah, for Reach 2; and Green River, Utah, for Reach 3.

[D] Recommended flow ≥527 m³/s in one of two average years.

[E] Recommended flow ≥235 m³/s in all average years.

[F] Recommended flow ≥623 m³/s in one of two average years.

BILLING CODE 4310–MN–C

Scope of Analysis

The purpose of this EIS is not to identify and evaluate alternatives that maximize all natural resources upstream and downstream from Flaming Gorge Dam. The purpose of this EIS is to evaluate the impacts of implementing the recommended flows to protect and assist in the recovery of the populations and designated critical habitat of the four endangered fishes living in the Green River downstream from Flaming Gorge Dam.

The proposed scope of the analysis for this EIS will focus on responding to the following analysis question:

> If Reclamation operates Flaming Gorge Dam to achieve the flow recommendations needed to protect and assist in the recovery of the endangered fishes and their critical habitat in the Green River, then the effect(s) on other relevant resources/issues, both downstream and upstream from the dam, would be . . .

Scoping conducted for the EIS will be used to identify issues associated with the proposed action and its purpose and need. Scoping will also be used to identify other significant resources that may be affected, identify the interested parties or parties affected by the proposed action, and assist Reclamation in developing reasonable alternatives that are consistent with the intent of the flow recommendations. The geographic scope of the EIS (how far upstream/downstream from the dam can impacts

be meaningfully evaluated) has not yet been determined. Reclamation invites comments suggesting a reasonable geographic scope of analysis for the EIS.

As a result of previous discussions with interested parties and earlier scoping activities, Reclamation has identified the following resources or issues as potentially relevant and ones that should be addressed in the EIS: threatened and endangered species, wetland and riparian resources, aquatic resources, water quality, water supply, recreation activities and facilities, cultural resources, power generation, damage to human improvements, operation and maintenance of the dam, sediment transport, vectors such as mosquitoes, social and economic effects, and Indian trust assets. Other relevant issues may be identified as a result of the scoping process associated with completion of this EIS.

Dated: May 31, 2000.

Charles A. Calhoun,

Regional Director, Upper Colorado Region.

[FR Doc. 00–14207 Filed 6–5–00; 8:45 am]

BILLING CODE 4310–MN–P

DEPARTMENT OF JUSTICE

National Institute of Justice

[OJP (NIJ)–1275]

Announcement of the Availability of the National Institute of Justice Solicitation for Communications Interoperability and Information Sharing Technologies (AGILE R&D)

AGENCY: Office of Justice Programs, National Institute of Justice, Justice.

ACTION: Notice of solicitation.

SUMMARY: Announcement of the availability of the National Institute of Justice ''Communications Interoperability and Information Sharing Technologies (AGILE R&D).''

DATES: Proposals must be received by close of business June 27, 2000.

ADDRESSES: National Institute of Justice, 810 Seventh Street, NW, Washington, DC 20531.

FOR FURTHER INFORMATION CONTACT: For a copy of the solicitation, please call NCJRS 1–800–851–3420. For general information about application procedures for solicitations, please call the U.S. Department of Justice Response Center 1–800–421–6770.

SUPPLEMENTARY INFORMATION:

Authority

This action is authorized under the Omnibus Crime Control and Safe Streets Act of 1968, sections 201–03, as amended, 42 U.S.C. 3721–23 (1994).

Background

NIJ's Advanced Generation of Interoperability for Law Enforcement (AGILE) is a comprehensive program that addresses the need for improved public safety communications and information sharing. The AGILE program has three main components: (1) The research, development, test, and evaluation of interoperable communications and information sharing technologies; (2) the identification, development, and adoption of open architecture standards for interoperability; and (3) interoperability education and outreach.

This solicitation seeks proposals that offer the development of communications interoperability and information sharing technologies that address specific gaps in today's regional communications needs of public safety agencies.

This solicitation is NOT intended for the procurement or deployment of commercial off-the-shelf (COTS) applications. Any such proposal received by NIJ will not be considered for award.

NIJ anticipates supporting one or two cooperative agreements totaling $450,000 in FY 2000 under this NIJ solicitation. Additional incremental funding may be available in FY 2001.

This solicitation is funded through the Crime Identification Act (CITA) appropriation. Additional information about CITA programs can be found on the Internet at http://www.ojp.usdoj.gov/cita.

Interested organizations should call the National Criminal Justice Reference Service (NCJRS) at 1–800–851–3420 to obtain a copy of ''Communications Interoperability and Information Sharing Technologies (AGILE R&D)'' (refer to document no. SL000423). For World Wide Web access, connect to either NIJ at http://www.ojp.usdoj.gov/nij/funding.htm, or the NCJRS Justice Information Center at *http://www.ncjrs.org/fedgrant.htm#nij.*

Dated: May 30, 2000.

Julie E. Samuels,

Acting Director, National Institute of Justice.

[FR Doc. 00–14094 Filed 6–5–00; 8:45 am]

BILLING CODE 4410–18–P

DEPARTMENT OF LABOR

Office of the Secretary

Submission for OMB Review; Comment Request

May 25, 2000.

The Department of Labor (DOL) has submitted the following public information collection requests (ICRs) to the Office of Management and Budget (OMB) for review and approval in accordance with the Paperwork Reduction Act of 1995 (Pub. L. 104–13, 44 U.S.C. Chapter 35). A copy of each individual ICR, with applicable supporting documentation, may be obtained by calling the Department of Labor. To obtain documentation for BLS, ETA, PWBA, and OASAM contact Karin Kurz ((202) 219–5096 ext. 159 or by E-mail to Kurz-Karin@dol.gov). To obtain documentation for ESA, MSHA, OSHA, and VETS contact Darrin King ((202) 219–5096 ext. 151 or by E-Mail to King-Darrin@dol.gov).

Comments should be sent to Office of Information and Regulatory Affairs, Attn: OMB Desk Officer for BLS, DM, ESA, ETA, MSHA, OSHA, PWBA, or VETS, Office of Management and Budget, Room 10235, Washington, DC 20503 ((202) 395–7316), within 30 days from the date of this publication in the **Federal Register**.

The OMB is particularly interested in comments which:

- Evaluate whether the proposed collection of information is necessary for the proper performance of the functions of the agency, including whether the information will have practical utility;
- Evaluate the accuracy of the agency's estimate of the burden of the proposed collection of information, including the validity of the methodology and assumptions used;
- Enhance the quality, utility, and clarity of the information to be collected; and
- Minimize the burden of the collection of information on those who are to respond, including through the use of appropriate automated, electronic, mechanical, or other technological collection techniques or other forms of information technology, *e.g.,* permitting electronic submission of response.

Type of Review: Extension of a currently approved collection.

Agency: Employment and Training Administration.

Title: Petition for Adjustment Assistance/Solicitud De Asistencia Para Ajuste.

OMB Number: 1205–0192.

Affected Public: Individuals or households; business or other for-profit.

Frequency: On occasion.

Number of Respondents: 1,400.

Total Annual Responses: 1,400.

Estimated Time Per Respondent: 15 Minutes.

Total Burden: 350 Hours.

Total Annualized capital/startup costs: $0.

Total annual costs (operating/maintaining systems or purchasing services): $0.

Description: The petitions are used by American workers applying to the U.S. Department of Labor for eligibility to receive worker Trade Adjustment Assistance in accordance with provisions of the Trade Act of 1974, as amended. The petition initiates action of part of the Department of Labor to determine if the workers are eligible.

Ira L. Mills,

Departmental Clearance Officer.

[FR Doc. 00–14147 Filed 6–5–00; 8:45 am]

BILLING CODE 4510–30–M

DEPARTMENT OF LABOR

Office of the Secretary

Submission for OMB Review; Comment Request

May 30, 2000.

The Department of Labor (DOL) has submitted the following public information collection requests (ICRs) to the Office of Management and Budget (OMB) for review and approval in accordance with the Paperwork Reduction Act of 1995 (Pub. L. 104–13, 44 U.S.C. Chapter 35). A copy of each individual ICR, with applicable supporting documentation, may be obtained by calling the Department of Labor. To obtain documentation for BLS, ETA, PWBA, and OASAM contact Karin Kurz ((202) 219–5096 ext. 159 or by E-mail to Kurz-Karin@dol.gov). To obtain documentation for ESA, MSHA, OSHA, and VETS contact Darrin King ((202) 219–5096 ext. 151 or by E-mail to King-Darrin@dol.gov).

Comments should be sent to Office of Information and Regulatory Affairs; Attn: OMB Desk Officer for BLS, DM, ESA, ETA, MSHA, OSHA, PWBA, or VETS, Office of Management and Budget, Room 10235, Washington, DC 20503 ((202) 395–7316), within 30 days from the date of this publication in the **Federal Register**.

The OMB is particularly interested in comments which:

- Evaluate whether the proposed collection of information is necessary for the proper performance of the functions of the agency, including whether the information will have practical utility;
- Evaluate the accuracy of the agency's estimate of the burden of the proposed collection of information, including the validity of the methodology and assumptions used;
- Enhance the quality, utility, and clarity of the information to be collected; and
- Minimize the burden of the collection of information on those who are to respond, including the use of appropriate automated, electronic, mechanical, or other technological collection techniques or other forms of information technology, *e.g.,* permitting electronic submission of responses.

Agency; Occupational Safety and Health Administration (OSHA).

Title: Reporting of Fatality and Multiple Hospitalization Incidents.

Type of Review: Extension of a currently approved collection.

OMB Number: 1218–0007.

Frequency: On occasion.

Affected Public: Business or other for-profit; not-for-profit institutions; farms; State, Local or Tribal Government.

Number of Respondents: 3,064.

Total Annual Responses: 3,064.

Estimated Time Per Response: 15 minutes.

Total Annualized Capital/Startup costs: $0.

Total Annual Costs (operating/maintaining systems or purchasing services): $0.

Total Burden Hours: 766.

Description: 29 CFR 1904.8 requires all workplace fatalities and incidents involving the in-patient hospitalization of three or more employees to be reported to OSHA within 8 hours of the incident. The information collected is used to schedule fatality/catastrophe investigations and inspections. OSHA's Field Inspection Reference Manual contains the prioritization scheme for the scheduling of Agency inspections. In this scheme, fatality/catastrophe inspections are second in priority only to inspections of reports of imminent danger.

Agency: Occupational Safety and Health Administration (OSHA).

Title: Cotton Dust (29 CFR 1910.1043).

Type of Review: Extension of a currently approved collection.

OMB Number: 1218–0061.

Frequency: On occasion.

Affected Public: Business or other for-profit; Federal government; State, Local or Tribal Government.

Number of Respondents: 457.

Total Annual Responses: 280,655.

Estimated Time Per Respondent: Time for response ranges from approximately 5 minutes to provide information to the examining physician to 2 hours to conduct exposure monitoring.

Total Burden Hours: 75,695 hours.

Total Annualized Capital/Startup: $0.

Total Annual Costs (operating/maintaining systems or purchasing services): $6,059,756.

Description: The information collection requirements specified in the Cotton Dust Standard provide protection for employees from the adverse health effects associated with exposure to cotton dust. In this regard, the Cotton Dust Standard requires employers to monitor employee's exposure to cotton dust, monitor employee health, and provide employees with information about their exposures and the health effects of exposure to cotton dust.

Agency: Occupational Safety and Health Administration (OSHA).

Title: Acrylonitrile (29 CFR 1910.1045).

Type of Review: Extension of a currently approved collection.

OMB Number: 1218–0126.

Frequency: On occasion.

Affected Public: Business or other for-profit; Federal Government; State, Local or Tribal Government.

Number of Respondents: 23.

Estimated Time Per Respondent: Varies from 5 minutes to provide information to the examining physician to 2 hours for employers to provide the Occupational Safety and Health Administration's (OSHA) area offices with information about Acrylonitrile (AN) emergencies.

Total Annual Responses: 18,960.

Total Burden Hours: 4,182 hours.

Total Annualized Capital/Startup: $0.

Total Annual Costs (operating/maintaining systems or purchasing services): $197,314.

Description: The information-collection requirements specified in the AN Standard protect employees from the adverse health effects that may result from their exposure to AN. The major information-collection requirements of the AN Standard include notifying employees of their AN exposures, implementing a written compliance program, providing examining physicians with specific information, ensuring that employees receive a copy of their medical-examination results, maintaining employees' exposure-monitoring and medical records for specific periods, and providing access to these records by OSHA, the National Institute for Occupational Safety and Health, the affected employees, and designated representatives.

Agency: Employment and Training Administration (ETA).

Title: Petition for Adjustment Assistance/Solicitude DE Assistancia Para Ajuste.

Type of Review: Extension of a currently approved collection.

OMB Number: 1205–0192.

Form Number: ETA 8560 (English) and ETA 9559 (Spanish).

Affected Public: Individuals or households; business or other for-profit.

Frequency: On occasion.

Number of Respondents: 1,400.

Estimated Time Per respondent: 15 Minutes.

Total Burden: 350 Hours.

Total Annualized Capital/Startup costs: $0.

Total Annual Costs (operating/maintaining systems or purchasing services): $0.

Description: The petitions are used by American workers applying to the U.S. Department of Labor for eligibility to receive worker Trade Adjustment Assistance in accordance with provisions of the Trade Act of 1974, as amended. The petition initiates an action by the Department of Labor to determine if the workers are eligible.

Ira L. Mills,

Departmental Clearance Officer.

[FR Doc. 00–14148 Filed 6–5–00; 8:45 am]

BILLING CODE 4510–26–M

DEPARTMENT OF LABOR

Office of the Secretary

Submission for OMB Review; Comment Request

May 31, 2000.

The Department of Labor (DOL) has submitted the following public information requests (ICRs) to the office of Management and Budget (OMB) for review and approval in accordance with the Paperwork Reduction Act of 1995 (Pub. L. 104–13, 44 U.S.C. Chapter 35). A copy of each individual ICR, with applicable supporting documentation, may be obtained by calling the Department of Labor. To obtain documentation for BLS, ETA, PWBA, and OASAM contact Karin Kurz (202–219–5096 ext. 159 or by E-mail to Kurz-Karin@dol.gov). To obtain documentation for ESA, MSHA, OSHA, and VETS contact Darrin King ((202) 219–5096 ext. 151 or by E-mail to King-Darrin@dol.gov).

Comments should be sent to Office of Information and Regulatory Affairs, Attn: Desk Officer for BLS, DM, ESA, ETA, MSHA, OSHA, PWBA, or VETS, Office of Management and Budget, Room 10235, Washington, DC 20503 ((202) 395–7316), within 30 days from the date of this publication in the **Federal Register**.

OMB is particularly interested in comments which:

- Evaluate whether the proposed collection of information is necessary for the proper performance of the functions of the agency, including whether the information will have practical utility;
- Evaluate the accuracy of the agency's estimate of the burden of the proposed collection of information, including the validity of the methodology and assumptions used;
- Enhance the quality, utility, and clarity of the information to be collected; and
- Minimize the burden of the collection of information on those who are to respond, including through the use of appropriate automated, electronic, mechanical, or other technological collection techniques or other forms of information technology, *e.g.*, permitting electronic submissions of responses.

Agency: Pension and Welfare Benefits Administration.

Title: Prohibited Transaction Exemption 97–41 Collective Investment Fund Conversion Transactions.

Type of Review: Extension of a currently approved collection.

OMB Number: 1210–0104.

Affected Public: Business or other for-profit; not-for-profit institutions; individuals or households.

Frequency of Response: On occasion.

Respondents: 75.

Responses: 75.

Total Estimated Burden Hours: 2,265.

Total Annualized Capital/Startup Costs: $0.

Total Annual Cost (Operating and Maintenance): $162,000.

Description: Section 408(a) of the ERISA gives the Secretary of Labor the right to grant a conditional or unconditional exemption of any fiduciary or class of fiduciaries or transactions, from all or part of the restrictions imposed by section 406 of ERISA. Prohibited Transaction Class Exemption 97–41 permits an employee benefit plan to purchase shares of one or more open-end management investment companies (Mutual Fund) registered under the Investment Advisers Act of 1940 and which also serves as a fiduciary of the plan, in exchange for plan assets transferred in-kind to the Mutual Fund from a collective investment fund (CIF) maintained by the bank or plan adviser, where the bank or plan adviser is both the adviser to the Mutual Fund and a fiduciary of the plan. The transfer must be in connection with a complete withdrawal of a plan's assets from the CIF. By requiring that the bank give to an independent fiduciary notice of the in-kind transfer, full written disclosure of the information concerning the Mutual Fund company, and any ongoing disclosures, this ICR insures that the exemption is not abused, the rights of the participants and beneficiaries are protected, and that compliance with the exemption's conditions is taking place.

Ira L. Mills,

Departmental Clearance Officer.

[FR Doc. 00–14149 Filed 6–5–00; 8:45 am]

BILLING CODE 4510–29–M

NATIONAL AERONAUTICS AND SPACE ADMINISTRATION

[Notice 00–063]

NASA Advisory Council (NAC), Aero-Space Technology Advisory Committee (ASTAC); Propulsion Systems Subcommittee; Meeting.

AGENCY: National Aeronautics and Space Administration.

ACTION: Notice of meeting.

SUMMARY: In accordance with the Federal Advisory Committee Act, Public Law 92–463, as amended, the National Aeronautics and Space Administration announces a NASA Advisory Council, Aero-Space Technology Advisory Committee, Propulsion Systems Subcommittee meeting.

DATES: Tuesday, June 27, 2000, 8 a.m. to 5 p.m. and Wednesday, June 28, 2000, 8 a.m. to 4 p.m.

ADDRESSES: National Aeronautics and Space Administration, John H. Glenn Research Center at Lewis Field, Building 86, Room 100, 21000 Brookpark Road, Cleveland, OH 44135.

FOR FURTHER INFORMATION CONTACT: Dr. Carol J. Russo, National Aeronautics and Space Administration, John H. Glenn Research Center at Lewis Field, 21000 Brookpark Road, Cleveland, OH 44135, 216/433–2965.

SUPPLEMENTARY INFORMATION: The meeting will be open to the public up to the seating capacity of the room. The agenda for the meeting is as follows:

—Overview
—Propulsion Systems Base R&T Program Review
—GPRA Milestones Review

It is imperative that the meeting be held on these dates to accommodate the

scheduling priorities of the key participants.

Dated: May 30, 2000.

Matthew M. Crouch,

Advisory Committee Management Officer, National Aeronautics and Space Administration.

[FR Doc. 00–14038 Filed 6–5–00; 8:45 am]

BILLING CODE 7510–01–P

NATIONAL AERONAUTICS AND SPACE ADMINISTRATION

[Notice 00–064]

NASA Advisory Council (NAC), Space Science Advisory Committee (SScAC), Sun-Earth Connection Advisory Subcommittee

AGENCY: National Aeronautics and Space Administration.

ACTION: Notice of meeting.

SUMMARY: In accordance with the Federal Advisory Committee Act, Public Law 92–463, as amended, the National Aeronautics and Space Administration announces a meeting of the NASA Advisory Council, Space Science Advisory Committee, Sun-Earth Connection Advisory Subcommittee.

DATES: Tuesday, June, 13, 2000, 8:30 a.m. to 5 p.m.; Wednesday, June, 14, 2000, 8:30 a.m. to 5 p.m.; and Thursday, 15, 2000, 8:30 a.m. to noon.

ADDRESSES: National Aeronautics and Space Administration, 300 E Street, SW, Conference Room 7H46, Washington, DC 20546.

FOR FURTHER INFORMATION CONTACT: George L. Withbroe, Code S, National Aeronautics and Space Administration, Washington, DC 20546, (202) 358–2150.

SUPPLEMENTARY INFORMATION: The meeting will be open to the public up to the capacity of the room. The agenda for the meeting is as follows:

—Wide Field three Camera for Hubble Space Telescope
—Space Data Archiving
—Scientists of the future in Sun-Earth Connection
—Solar Probe Developments
—The Image Mission

It is imperative that the meeting be held on these dates to accommodate the scheduling priorities of the key participants. Visitors will be requested to sign a visitor's register.

Dated: May 30, 2000.

Matthew M. Crouch,

Advisory Committee Management Officer, National Aeronautics and Space Administration.

[FR Doc. 00–14039 Filed 6–5–00; 8:45 am]

BILLING CODE 7510–01–P

NATIONAL AERONAUTICS AND SPACE ADMINISTRATION

[Notice 00–065]

NASA Advisory Council (NAC), Space Science Advisory Committee (SScAC), Astronmical Search for Origins and Planetary Systems (ORIGINS); Subcommittee Meeting

AGENCY: National Aeronautics and Space Administration.

ACTION: Notice of meeting.

SUMMARY: In accordance with the Federal Advisory Committee Act, Public Law 92–463, as amended, the National Aeronautics and Space Administration announces a forthcoming meeting of the NASA Advisory Council, Space Science Advisory Committee, ORIGINS Subcommittee.

DATES: Tuesday, June 13, 2000, 8:30 a.m. to 5 p.m.; Wednesday, June 14, 2000, 8:30 a.m. to 5 p.m.

ADDRESSES: National Aeronautics and Space Administration, 300 E Street, SW, Program Review Center (PRC) 9H40 Washington, DC, 20546.

FOR FURTHER INFORMATION CONTACT: Dr. Anne L. Kinney, Code S, National Aeronautics and Space Administration, Washington, DC 20546, 202/358–0362.

SUPPLEMENTARY INFORMATION: The meeting will be open to the public up to the capacity of the room. The agenda for the meeting includes the following topics:

—Next Generation Space Telescope
—Discussion on Wide Field Camera 3
—Stratospheric Observatory for Infrared Astronomy Archive Nexus

It is imperative that the meeting be held on these dates to accommodate the scheduling priorities of the key participants. Visitors will be requested to sign a visitor's register.

Dated: May 30, 2000.

Matthew M. Crouch,

Advisory Committee Management Officer, National Aeronautics and Space Administration.

[FR Doc. 00–14040 Filed 6–5–00; 8:45 am]

BILLING CODE 7510–01–P

NATIONAL SCIENCE FOUNDATION

Agency Information Collection Activities: Comment Request

AGENCY: National Science Foundation.

ACTION: Submission for OMB review; comment request.

SUMMARY: The National Science Foundation (NSF) has submitted the following information collection requirement to OMB for review and clearance under the Paperwork Reduction Act of 1995, Pub. L. 104–13. This is the second notice for public comment; the first was published in the **Federal Register** at 65 FR 5916, and no comments were received. NSF is forwarding the proposed renewal submission to the Office of Management and Budget (OMB) for clearance simultaneously with the publication of this second notice. Comments regarding (a) whether the collection of information is necessary for the proper performance of the functions of the agency, including whether the information will have practical utility; (b) the accuracy of the agency's estimate of burden including the validity of the methodology and assumptions used; (c) ways to enhance the quality, utility and clarity of the information to be collected; (d) ways to minimize the burden of the collection of information on those who are to respond, including through the use of appropriate automated, electronic, mechanical, or other technological collection techniques or other forms of information technology should be addressed to: Office of Information and Regulatory Affairs of OMB, Attention: Desk Officer for National Science Foundation, 725—17th Street, NW., Room 10235, Washington, DC 20503, and to Suzanne H. Plimpton, Reports Clearance Officer, National Science Foundation, 4201 Wilson Boulevard, Suite 295, Arlington, Virginia 22230 or send email to splimpto@nsf.gov. Comments regarding these information collections are best assured of having their full effect if received within 30 days of this notification. Copies of the submission(s) may be obtained by calling 703–306–1125 X 2017.

NSF may not conduct or sponsor a collection of information unless the collection of information displays a currently valid OMB control number and the agency informs potential persons who are to respond to the collection of information that such persons are not required to respond to the collection of information unless it displays a currently valid OMB control number.

Title: National Science Foundation Grant Proposal Guide.

OMB Control Number: 3145–0058.

Summary of Collection: The mission of the National Science Foundation is to serve as a catalyst for progress through investment in science, mathematics and engineering. The agency is guided by its longstanding commitment to the highest standards of excellence in the support of discovery and learning. NSF pledges to provide the leadership and stewardship

necessary to sustain and strengthen the Nation's science, mathematics, and engineering capabilities and to promote the use of those capabilities in service to society. NSF's continuing mission is set out in the preamble to the National Science Foundation Act of 1950 (Pub. L. 507):

To promote the progress of science; to advance the national health, prosperity, and welfare; to secure the national defense; and for other purposes.

The information collected is used to help the Foundation fulfill this responsibility by initiating and supporting merit-selected research and education projects in all the scientific and engineering disciplines. NSF receives more than 30,000 proposals annually for new or renewal support for research in math/science/engineering education projects and makes approximately 10,000 new awards. The Foundation exercises its authority primarily by making merit-based grants and cooperative agreements and providing other forms of assistance to individual researchers and groups, in partnership with over 2800 colleges, universities and other institutions—public and private, state, local and federal—throughout the US. The awards are based mainly on evaluations of proposal merit submitted to the Foundation (see OMB Clearance No. 3145–0060).

The Foundation has a continuing commitment to monitor the operations of its review and award processes to identify and address excessive reporting burdens. The Foundation also is committed to monitor and identify any real or apparent inequities based on gender, race, ethnicity, or handicap of the proposed principal investigator(s)/project director(s) or co-principal investigator(s)/co-project director(s). The collection of this information is a part of the regular submission of proposal to the Foundation. This information also is protected by the Privacy Act.

Description of Respondents: Nonprofit institutions; state, local or tribal governments; and business or other for-profit.

Number of Respondents: 30,000.

Frequency of Responses: Annually.

Total Burden Hours: The Foundation estimates that an average of 120 hours of expended for each proposal submitted. If an estimated 30,000 proposals are expected during the course of one year, these figures compute to an estimated 3,600,000 public burden hours annually.

Dated: May 31, 2000.

Suzanne H. Plimpton,

Reports Clearance Officer, National Science Foundation.

[FR Doc. 00–14090 Filed 6–5–00; 8:45 am]

BILLING CODE 7555–01–M

NATIONAL TRANSPORTATION SAFETY BOARD

Sunshine Act Meeting; Notice

AGENDA

TIME AND DATE: 9:30 a.m., Tuesday, June 13, 2000.

PLACE: NTSB Board Room, 429 L'Enfant Plaza, S.W., Washington, DC 20594.

STATUS: Open to the Public.

MATTERS TO BE CONSIDERED:

7266 Safety Recommendations: To the Federal Aviation Administration (FAA) to prevent Runway

7128A Hazardous Materials Accident Briefs: Whitehall, Michigan and Louisville, Kentucky.

NEWS MEDIA CONTACT: Telephone: (202) 314–6100.

Individuals requesting specific accommodation should contact Mrs. Barbara Bush at (202) 314–6220 by Friday, June 9, 2000.

FOR MORE INFORMATION CONTACT: Rhonda Underwood (202) 314–6065.

Dated: June 2, 2000.

Rhonda Underwood,

Federal Register Liaison Officer.

[FR Doc. 00–14347 Filed 6–2–00; 3:17 pm]

BILLING CODE 7533–01–M

NUCLEAR REGULATORY COMMISSION

Agency Information Collection Activities: Proposed Collection; Comment Request

AGENCY: Nuclear Regulatory Commission (NRC).

ACTION: Notice of pending NRC action to submit an information collection request to OMB and solicitation of public comment.

SUMMARY: The NRC is preparing a submittal to OMB for review of continued approval of information collections under the provisions of the Paperwork Reduction Act of 1995 (44 U.S.C. chapter 35).

Information pertaining to the requirement to be submitted:

1. *The title of the information collection:* NRC Form 398, ''Personal Qualification Statement—Licensee''.

2. *Current OMB approval number:* 3150–0090.

3. *How often the collection is required:* On occasion and every six years (at renewal).

4. *Who is required or asked to report:* Individuals requiring a license to operate the controls at a nuclear facility.

5. *The number of annual respondents:* 1,610 annually.

6. *The number of hours needed annually to complete the requirement or request:* 1,950, approximately 1 hour per response.

7. *Abstract:* NRC Form 398 requests detailed information that should be submitted by a licensing applicant and facility licensee when applying for a new or renewal license to operate the controls at a nuclear facility. This information, once collected, would be used for licensing actions and for generating reports on the Operator Licensing Program.

Submit, by August 7, 2000, comments that address the following questions:

1. Is the proposed collection of information necessary for the NRC to properly perform its functions? Does the information have practical utility?

2. Is the burden estimate accurate?

3. Is there a way to enhance the quality, utility, and clarity of the information to be collected?

4. How can the burden of the information collection be minimized, including the use of automated collection techniques or other forms of information technology?

A copy of the draft supporting statement may be viewed free of charge at the NRC Public Document Room, 2120 L Street, NW., (lower level), Washington, DC. OMB clearance requests are available at the NRC worldwide web site (http://www.nrc.gov/NRC/PUBLIC/OMB/index.html). The document will be available on the NRC home page site for 60 days after the signature date of this notice.

Comments and questions about the information collection requirements may be directed to the NRC Clearance Officer, Brenda Jo. Shelton, U.S. Nuclear Regulatory Commission, T–6 E6, Washington, DC 20555–0001, by telephone at 301–415–7233, or by Internet electronic mail at BJS1@NRC.GOV.

Dated at Rockville, Maryland, this 31st day of May 2000.

For the Nuclear Regulatory Commission.

Brenda Jo. Shelton,

NRC Clearance Officer, Office of the Chief Information Officer.

[FR Doc. 00–14191 Filed 6–6–00; 8:45 am]

BILLING CODE 7590–01–P

NUCLEAR REGULATORY COMMISSION

Agency Information Collection Activities: Proposed Collection; Comment Request

AGENCY: Nuclear Regulatory Commission (NRC).

ACTION: Notice of pending NRC action to submit an information collection request to OMB and solicitation of public comment.

SUMMARY: The NRC is preparing a submittal to OMB for review of continued approval of information collections under the provisions of the Paperwork Reduction Act of 1995 (44 U.S.C. chapter 35).

Information pertaining to the requirement to be submitted:

1. *The title of the information collection:* NRC Form 790, ''Classification Record''.

2. *Current OMB approval number:* NRC Form 790.

3. *How often the collection is required:* On occasion.

4. *Who will be required or asked to report:* NRC employees, NRC contractors, NRC licensees, and its only certificate holder who classify and declassify NRC information.

5. *The estimated number of annual respondents:* 324.

6. *An estimate of the total number of hours needed annually to complete the requirement or request:* 27.

7. *Abstract:* Completion of the NRC Form 790 is a mandatory requirement for licensees, contractors, and only certificate holders who classify and declassify NRC information in accordance with Executive Order 12958, ''Classified National Security Information,'' the Atomic Energy Act, and implementing directives.

Submit, by August 7, 2000, comments that address the following questions:

1. Is the proposed collection of information necessary for the NRC to properly perform its functions? Does the information have practical utility?

2. Is the burden estimate accurate?

3. Is there a way to enhance the quality, utility, and clarity of the information to be collected?

4. How can the burden of the information collection be minimized, including the use of automated collection techniques or other forms of information technology?

A copy of the draft supporting statement may be viewed free of charge at the NRC Public Document Room, 2120 L Street, NW., (lower level), Washington, DC. OMB clearance requests are available at the NRC worldwide web site (http://www.nrc.gov/NRC/PUBLIC/OMB/index.html). The document will be available on the NRC home page site for 60 days after the signature date of this notice.

Comments and questions about the information collection requirements may be directed to the NRC Clearance Officer, Brenda Jo. Shelton, U.S. Nuclear Regulatory Commission, T–6 E6, Washington, DC 20555–0001, by telephone at 301–415–7233, or by Internet electronic mail at BJS1@NRC.GOV.

Dated at Rockville, Maryland, this 31st day of May 2000.

For the Nuclear Regulatory Commission.

Brenda Jo. Shelton,

NRC Clearance Officer, Office of the Chief Information Officer.

[FR Doc. 00–14192 Filed 6–5–00; 8:45 am]

BILLING CODE 7590–01–P

NUCLEAR REGULATORY COMMISSION

[Docket Nos. 50–266 and 50–301]

Wisconsin Electric Power Company; Notice of Consideration of Issuance of Amendments to Facility Operating Licenses, Proposed No Significant Hazards Consideration Determination, and Opportunity for a Hearing

The U.S. Nuclear Regulatory Commission (the Commission) is considering issuance of amendments to Facility Operating License Nos. DPR–24 and DPR–27, issued to Wisconsin Electric Power Company (the licensee) for operation of the Point Beach Nuclear Plant, Units 1 and 2, located in Manitowoc County, Wisconsin.

The proposed amendments would eliminate one of the license conditions and associated implementation dates from Appendix C to the licenses. The license condition currently requires the licensee to submit a license amendment application and supporting radiological dose analyses demonstrating compliance with General Design Criterion (GDC) 19 dose limits without reliance on potassium iodide (KI). By letter dated April 7, 2000, the NRC staff concurred with the licensee that the use of KI to reduce operator dose during a radiological emergency was not precluded in the licensing basis for Point Beach, Units 1 and 2.

Before issuance of the proposed license amendments, the Commission will have made findings required by the Atomic Energy Act of 1954, as amended (the Act) and the Commission's regulations.

The Commission has made a proposed determination that the amendment request involves no significant hazards consideration. Under the Commission's regulations in 10 CFR 50.92, this means that operation of the facility in accordance with the proposed amendments would not (1) involve a significant increase in the probability or consequences of an accident previously evaluated; or (2) create the possibility of a new or different kind of accident from any accident previously evaluated; or (3) involve a significant reduction in a margin of safety. As required by 10 CFR 50.91(a), the licensee has provided its analysis of the issue of no significant hazards consideration, which is presented below:

1. Operation of the Point Beach Nuclear Plant in accordance with the proposed amendments will not create a significant increase in the probability or consequences of an accident previously evaluated.

The license condition that is proposed for deletion is an administrative condition related to analyses to demonstrate conformance to 10 CFR 50, GDC 19 dose limits, and the requirements for design and operation of the control room ventilation system as assumed in the analyses. The license condition proposed for deletion is not related to any factor or event that is an initiator of any accident and thus, deletion will not affect the probability of any accident previously evaluated.

The dose analyses and the resultant required changes to the control room ventilation system were based in part on making changes to the licensing basis for the control room ventilation system and analyses. These changes were not solely to demonstrate compliance with GDC 19. The existing analysis of record for control room dose demonstrates that regulatory limits are met with the present design and assumptions. Therefore, deletion of the license condition does not result in a significant increase in the consequences of an accident previously evaluated.

2. Operation of the Point Beach Nuclear Plant in accordance with the proposed amendments will not create the possibility of a new or different kind of accident from any accident previously evaluated.

The license condition imposed administrative requirements for analyses of radiological consequences of presently analyzed events. Deletion of the license condition will not result in a change in the operation of any system as presently assumed. Therefore, no new accident initiators can result. Thus, the deletion of the license condition cannot result in a new or different kind of accident from any accident previously evaluated.P≤3. Operation of the Point Beach Nuclear Plant in accordance with the proposed amendments does not create a significant reduction in a margin of safety.

Deletion of the existing license condition will not result in a change in the way the plant is presently designed and operated. Operation will continue in accordance with

presently approved analyses. Therefore, existing approved margins of safety are maintained. Operation in accordance with the proposed amendment does not create a reduction in a margin of safety.

The NRC staff has reviewed the licensee's analysis and, based on this review, it appears that the three standards of 10 CFR 50.92(c) are satisfied. Therefore, the NRC staff proposes to determine that the amendment request involves no significant hazards consideration.

The Commission is seeking public comments on this proposed determination. Any comments received within 30 days after the date of publication of this notice will be considered in making any final determination.

Normally, the Commission will not issue the amendment until the expiration of the 30-day notice period. However, should circumstances change during the notice period such that failure to act in a timely way would result, for example, in derating or shutdown of the facility, the Commission may issue the license amendment before the expiration of the 30-day notice period, provided that its final determination is that the amendment involves no significant hazards consideration. The final determination will consider all public and State comments received. Should the Commission take this action, it will publish in the **Federal Register** a notice of issuance and provide for opportunity for a hearing after issuance. The Commission expects that the need to take this action will occur very infrequently.

Written comments may be submitted by mail to the Chief, Rules and Directives Branch, Division of Administrative Services, Office of Administration, U.S. Nuclear Regulatory Commission, Washington, DC 20555–0001, and should cite the publication date and page number of this **Federal Register** notice. Written comments may also be delivered to Room 6D59, Two White Flint North, 11545 Rockville Pike, Rockville, Maryland, from 7:30 a.m. to 4:15 p.m. Federal workdays. Copies of written comments received may be examined at the NRC Public Document Room, the Gelman Building, 2120 L Street, NW., Washington, DC.

The filing of requests for hearing and petitions for leave to intervene is discussed below.

By July 6, 2000, the licensee may file a request for a hearing with respect to issuance of the amendment to the subject facility operating license and any person whose interest may be affected by this proceeding and who wishes to participate as a party in the proceeding must file a written request for a hearing and a petition for leave to intervene. Requests for a hearing and a petition for leave to intervene shall be filed in accordance with the Commission's ''Rules of Practice for Domestic Licensing Proceedings'' in 10 CFR part 2. Interested persons should consult a current copy of 10 CFR 2.714 which is available at the Commission's Public Document Room, the Gelman Building, 2120 L Street, NW., Washington, DC, and accessible electronically through the ADAMS Public Electronic Reading Room link at the NRC Web site (http://www.nrc.gov). If a request for a hearing or petition for leave to intervene is filed by the above date, the Commission or an Atomic Safety and Licensing Board, designated by the Commission or by the Chairman of the Atomic Safety and Licensing Board Panel, will rule on the request and/or petition; and the Secretary or the designated Atomic Safety and Licensing Board will issue a notice of hearing or an appropriate order.

As required by 10 CFR 2.714, a petition for leave to intervene shall set forth with particularity the interest of the petitioner in the proceeding, and how that interest may be affected by the results of the proceeding. The petition should specifically explain the reasons why intervention should be permitted with particular reference to the following factors: (1) The nature of the petitioner's right under the Act to be made party to the proceeding; (2) the nature and extent of the petitioner's property, financial, or other interest in the proceeding; and (3) the possible effect of any order which may be entered in the proceeding on the petitioner's interest. The petition should also identify the specific aspect(s) of the subject matter of the proceeding as to which petitioner wishes to intervene. Any person who has filed a petition for leave to intervene or who has been admitted as a party may amend the petition without requesting leave of the Board up to 15 days prior to the first prehearing conference scheduled in the proceeding, but such an amended petition must satisfy the specificity requirements described above.

Not later than 15 days prior to the first prehearing conference scheduled in the proceeding, a petitioner shall file a supplement to the petition to intervene which must include a list of the contentions which are sought to be litigated in the matter. Each contention must consist of a specific statement of the issue of law or fact to be raised or controverted. In addition, the petitioner shall provide a brief explanation of the bases of the contention and a concise statement of the alleged facts or expert opinion which support the contention and on which the petitioner intends to rely in proving the contention at the hearing. The petitioner must also provide references to those specific sources and documents of which the petitioner is aware and on which the petitioner intends to rely to establish those facts or expert opinion. Petitioner must provide sufficient information to show that a genuine dispute exists with the applicant on a material issue of law or fact. Contentions shall be limited to matters within the scope of the amendment under consideration. The contention must be one which, if proven, would entitle the petitioner to relief. A petitioner who fails to file such a supplement which satisfies these requirements with respect to at least one contention will not be permitted to participate as a party.

Those permitted to intervene become parties to the proceeding, subject to any limitations in the order granting leave to intervene, and have the opportunity to participate fully in the conduct of the hearing, including the opportunity to present evidence and cross-examine witnesses.

If a hearing is requested, the Commission will make a final determination on the issue of no significant hazards consideration. The final determination will serve to decide when the hearing is held.

If the final determination is that the amendment request involves no significant hazards consideration, the Commission may issue the amendment and make it immediately effective, notwithstanding the request for a hearing. Any hearing held would take place after issuance of the amendment.

If the final determination is that the amendment request involves a significant hazards consideration, any hearing held would take place before the issuance of any amendment.

A request for a hearing or a petition for leave to intervene must be filed with the Secretary of the Commission, U.S. Nuclear Regulatory Commission, Washington, DC 20555–0001, Attention: Rulemakings and Adjudications Staff, or may be delivered to the Commission's Public Document Room, the Gelman Building, 2120 L Street, NW., Washington, DC, by the above date. A copy of the petition should also be sent to the Office of the General Counsel, U.S. Nuclear Regulatory Commission, Washington, DC 20555–0001, and to John H. O'Neill, Jr., Shaw, Pittman, Potts, and Trowbridge, 2300 N Street, NW., Washington, DC 20037, attorney for the licensee.

Nontimely filings of petitions for leave to intervene, amended petitions, supplemental petitions and/or requests for hearing will not be entertained absent a determination by the Commission, the presiding officer or the presiding Atomic Safety and Licensing Board that the petition and/or request should be granted based upon a balancing of the factors specified in 10 CFR 2.714(a)(1)(i)–(v) and 2.714(d).

For further details with respect to this action, see the application for amendments dated May 19, 2000, which is available for public inspection at the Commission's Public Document Room, the Gelman Building, 2120 L Street, NW., Washington, DC, and accessible electronically through the ADAMS Public Electronic Reading Room link at the NRC Web site (http://www.nrc.gov).

Dated at Rockville, Maryland, this 1st day of June 2000.

For the Nuclear Regulatory Commission.

Beth A. Wetzel,

Senior Project Manager, Project Directorate III–1, Division of Licensing Project Management, Office of Nuclear Reactor Regulation.

[FR Doc. 00–14189 Filed 6–5–00; 8:45 am]

BILLING CODE 7590–01–P

NUCLEAR REGULATORY COMMISSION

Public Meeting on 10 CFR Part 70, Integrated Safety Analysis Guidance Document, Standard Review Plan Chapter 11 and Streamlining Licensing Reviews

AGENCY: Nuclear Regulatory Commission.

ACTION: Notice of meeting.

SUMMARY: NRC will host a public meeting in Rockville, Maryland. The meeting will provide an opportunity for discussion of: (1) The Draft Integrated Safety Analysis guidance document prepared by the industry; and (2) Chapter 11, Management Measures, in the Standard Review Plan (SRP) for fuel cycle facilities (NUREG–1520) that was made available during April 2000.

The revised SRP can be reviewed on the internet at the following website: http://techconf.llnl.gov/cgi-bin/downloader/Part__70__lib/073–0098.htm. At the end of the SRP discussion, a program developed by the Fuel Cycle staff to streamline licensing reviews and actions will be discussed.

Purpose

This meeting will provide an opportunity to discuss: (1) The Draft Integrated Safety Analysis guidance document prepared by the industry; and (2) Chapter 11, Management Measures, in the Standard Review Plan (SRP) for fuel cycle facilities (NUREG–1520) that was made available during April 2000. At the end of the SRP discussion, a program developed by the Fuel Cycle staff to streamline licensing reviews and actions will be presented.

DATES: The meeting is scheduled for Thursday, June 8, 2000, from 9:30–4 and Friday, June 9, 2000, from 9–4. The discussion of the Draft Integrated Safety Analysis guidance document is scheduled for June 8 from 9:30–11:30 followed by the SRP Chapter 11 discussion from 1–4, and continuing on the morning of June 9, 2000, if needed. This meeting is open to the public.

ADDRESSES: The meeting will be held in the Atomic Safety Licensing Board Hearing Room at Two White Flint North, Room T–3–B–45, 11545 Rockville Pike, Rockville, Maryland. Visitor parking around the NRC building is limited; however, the meeting site is located adjacent to the White Flint Station on the Metro Red line.

FOR FURTHER INFORMATION CONTACT: Andrew Persinko, Office of Nuclear Material Safety and Safeguards, U.S. Nuclear Regulatory Commission, Washington, DC 20555, telephone: (301) 415–7190, e-mail *axp1@nrc.gov*.

Dated at Rockville, Maryland this 1st day of June 2000.

For the Nuclear Regulatory Commission.

Theodore S. Sherr,

Chief, Licensing and International Safeguards Branch, Division of Fuel Cycle Safety and Safeguards, NMSS.

[FR Doc. 00–14190 Filed 6–5–00; 8:45 am]

BILLING CODE 7590–01–P

NUCLEAR WASTE TECHNICAL REVIEW BOARD

Panel Meeting: July 10, 2000—Idaho Falls, Idaho: Discussions of Technical Issues Related to Managing and Transporting Spent Nuclear Fuel and High-Level Radioactive Waste; Presentations on Human Factors Involved in Transporting the Waste and Manufacturing Waste Casks; Update on Transportation Modal Study

Pursuant to its authority under section 5051 of Public Law 100–203, Nuclear Waste Policy Amendments Act of 1987, on Monday, July 10, 2000, the Nuclear Waste Technical Review Board's (Board) Panel on the Waste Management System will meet in Idaho Falls, Idaho, to discuss technical issues related to managing spent nuclear fuel and high-level radioactive waste, including human factors involved in transporting such waste. The Board is charged by Congress with reviewing the technical and scientific aspects of the Department of Energy's (DOE) civilian radioactive waste management program, including disposing of, packaging, and transporting the waste.

The panel meeting will be held at the Shilo Inn, 780 Lindsay Blvd., Idaho Falls, Idaho 83402–1822. The telephone number is (208) 523–0088; the fax number is (208) 522–7420. The meeting will start at 8 a.m. and will be open to the public.

An overview on transportation protocols by the DOE's Office of Civilian Radioactive Waste Management will begin the meeting. This discussion will be followed by updates on a transportation modal study by a representative of the Nuclear Regulatory Commission and on naval spent fuel disposal and transportation by a representative of the Naval Nuclear Propulsion Program. A representative of the Association of American Railroads (AAR) and a manufacturer of nuclear waste casks will then discuss human factors related to railroad operations and cask manufacturing. Next will be a presentation on performance specifications for transportation of spent fuel by another representative of the AAR. In midafternoon, the Panel will hear from state, local, and Tribal representatives on their views of technical issues related to transporting and managing spent nuclear fuel and high-level radioactive waste.

Time will be set aside at the end of the day for public comments. Those wanting to speak are encouraged to sign the ''Public Comment Register'' at the check-in table. A time limit may have to be set on individual remarks, but written comments of any length may be submitted for the record. Interested parties also will have the opportunity to submit questions in writing to the Board. As time permits, the questions will be answered by one or more Board members during the meeting.

A detailed agenda will be available approximately one week before the meeting. Copies of the agenda can be requested by telephone or obtained from the Board's Web site at www.nwtrb.gov. Transcripts of the meeting will be available on the Board's Web site, via e-mail, on computer disk, and on a library-loan basis in paper format from Davonya Barnes of the Board staff, beginning on August 7, 2000.

A block of rooms has been reserved at the Shilo Inn. When making a reservation, please state that you are attending the Nuclear Waste Technical

Review Board meeting. For more information, contact the NWTRB, Karyn Severson, External Affairs, 2300 Clarendon Boulevard, Suite 1300, Arlington, Virginia 22201–3367; (tel) 703–235–4473, (fax) 703–235–4495; (e-mail) info@nwtrb.gov.

The Nuclear Waste Technical Review Board was created by Congress in the Nuclear Waste Policy Amendments Act of 1987. The Board's purpose is to evaluate the technical and scientific validity of activities undertaken by the Secretary of Energy related to managing the disposal of the nation's spent nuclear fuel and high-level radioactive waste. In the same legislation, Congress directed the DOE to characterize a site at Yucca Mountain, Nevada, to determine its suitability as the location of a potential repository for the permanent disposal of spent nuclear fuel and high-level radioactive waste.

Dated: May 31, 2000.

William D. Barnard,

Executive Director, Nuclear Waste Technical Review Board.

[FR Doc. 00–14103 Filed 6–5–00; 8:45 am]

BILLING CODE 6820–AM–M

OFFICE OF THE UNITED STATES TRADE REPRESENTATIVE

[Docket No. WTO/D–194]

WTO Consultations Regarding Measures Treating Export Restraints as Subsidies

AGENCY: Office of the United States Trade Representative.

ACTION: Notice; request for comments.

SUMMARY: The Office of the United States Trade Representative (USTR) is providing notice that on May 19, 2000, Canada requested consultations with the United States under the Marrakesh Agreement Establishing the World Trade Organization (WTO Agreement), regarding U.S. measures that treat a restraint on exports of a product as a subsidy to other products made using or incorporating the restricted product if the domestic price of the restricted product is affected by the restraint. The measures identified by Canada in its consultation request are those provisions of the Statement of Administrative Action (SAA) accompanying the Uruguay Round Agreements Act (URAA) (H.R. 5110, H.R. Doc. 316, Vol. I, 103d Cong., 2d Sess., 656, in particular at 925–926 (1994)) and the Explanation of the Final Rules (the Explanation), U.S. Department of Commerce, Countervailing Duties, Final Rule (63 **Federal Register** 65,348, 65,349–51 (November 25, 1998)) interpreting section 771(5) of the Tariff Act of 1930 (19 U.S.C. 1677(5)), as amended by the URAA. Canada alleges that the SAA and the Explanation are inconsistent with Article 1.1, 10 (as well as Articles 11, 17 and 19, as they relate to the requirements of Article 10), and 32.1 of the WTO Agreement on Subsidies and Countervailing Measures (SCM Agreement). Canada also alleges that by maintaining these measures, the United States violates Article 32.5 of the SCM Agreement and Article XVI:4 of the WTO Agreement. Pursuant to Article 4.3 of the WTO Dispute Settlement Understanding (''DSU''), consultations are to take place within a period of 30 days from the date of receipt of the request, or within a period otherwise mutually agreed between the United States and Canada. USTR invites written comments from the public concerning the issues raised in this dispute.

DATES: Although the USTR will accept any comments received during the course of the dispute settlement proceedings, comments should be submitted on or before June 12 to be assured of timely consideration by USTR.

ADDRESSES: Comments may be submitted to Sandy McKinzy, Litigation Assistant, the Monitoring and Enforcement Unit, Office of the General Counsel, Room 122, Attn: Export Restraint Dispute, Office of the United States Trade Representative, 600 17th Street, N.W., Washington, D.C. 20508, (202) 395–3582.

FOR FURTHER INFORMATION CONTACT: William D. Hunter, Associate General Counsel, Office of the United States Trade Representative, 600 17th Street, N.W., Washington, D.C., (202) 395–3582.

SUPPLEMENTARY INFORMATION: Section 127(b) of the Uruguay Round Agreements Act (URAA) (19 U.S.C. 3537(b)(1)) requires that notice and opportunity for comment be provided after the United States receives a request for the establishment of a WTO dispute settlement panel. Consistent with this obligation, but in an effort to provide additional opportunity for comment, USTR is providing notice that consultations have been requested pursuant to the WTO Dispute Settlement Understanding . If such consultations should fail to resolve the matter and a dispute settlement panel is established pursuant to the DSU, such panel, which would hold its meetings in Geneva, Switzerland, would be expected to issue a report on its findings and recommendations within six to nine months after it is established.

Major Issues Raised by Canada

In its consultation request, Canada alleges that the SAA and the Explanation are measures that treat an export restraint as a subsidy. Because Canada appears to allege that an export restraint cannot be considered to be a subsidy within the meaning of Article 1.1 of the SCM Agreement, Canada claims that the SAA and the Explanation are inconsistent with Articles 1.1, 10, 11, 17, 19 and 32.1 of the SCM Agreement. Canada also appears to allege that due to the existence of the SAA and the Explanation, the United States has failed to ensure that its laws, regulations and administrative procedures are in conformity with its WTO obligations as required by Article 32.5 of the SCM Agreement and Article XVI:4 of the WTO Agreement.

Public Comment: Requirements for Submissions

Interested persons are invited to submit written comments concerning the issues raised in the dispute. Comments must be in English and provided in fifteen copies. A person requesting that information contained in a comment submitted by that person be treated as confidential business information must certify that such information is business confidential and would not customarily be released to the public by the commenter. Confidential business information must be clearly marked ''BUSINESS CONFIDENTIAL'' in a contrasting color ink at the top of each page of each copy.

Information or advice contained in a comment submitted, other than business confidential information, may be determined by USTR to be confidential in accordance with section 135(g)(2) of the Trade Act of 1974 (19 U.S.C. 2155(g)(2)). If the submitter believes that information or advice may qualify as such, the submitter—

(1) Must so designate the information or advice;

(2) Must clearly mark the material as ''SUBMITTED IN CONFIDENCE'' in a contrasting color ink at the top of each page of each copy; and

(3) Is encouraged to provide a non-confidential summary of the information or advice.

Pursuant to section 127(e) of the URAA (19 U.S.C. 3537(e)), USTR will maintain a file on this dispute settlement proceeding, accessible to the public, in the USTR Reading Room: Room 101, Office of the United States Trade Representative, 600 17th Street,

N.W., Washington, D.C. 20508. The public file will include a listing of any comments received by USTR from the public with respect to the proceeding; the U.S. submissions to the panel in the proceeding, the submissions, or non-confidential summaries of submissions, to the panel received from other participants in the dispute, as well as the report of the dispute settlement panel, and, if applicable, the report of the Appellate Body. An appointment to review the public file (Docket WTO/D–194, Export Restraint Dispute) may be made by calling Brenda Webb, (202) 395–6186. The USTR Reading Room is open to the public from 9:30 a.m. to 12 noon and 1 p.m. to 4 p.m., Monday through Friday.

A. Jane Bradley,

Assistant United States Trade Representative for Monitoring and Enforcement.

[FR Doc. 00–14209 Filed 6–5–00; 8:45 am]

BILLING CODE 3190–01–P

OFFICE OF THE UNITED STATES TRADE REPRESENTATIVE

[Docket No. WTO/DS–184]

WTO Dispute Settlement Proceeding Regarding United States—Antidumping Measures on Certain Hot-Rolled Steel Products From Japan

AGENCY: Office of the United States Trade Representative.

ACTION: Notice; request for comments.

SUMMARY: The Office of the United States Trade Representative (''USTR'') is providing notice of the establishment of a dispute settlement panel under the Marrakesh Agreement Establishing the World Trade Organization (''WTO''), requested by the Government of Japan. The Government of Japan has asked the panel to review the determinations of the U.S. Department of Commerce (''DOC'') and the U.S. International Trade Commission (''ITC'') that led to the issuance of an antidumping duty order covering imports of certain hot-rolled steel products from Japan (64 FR 34778, June 29, 1999). Specifically, DOC published a preliminary determination of critical circumstances on November 30, 1998 (63 FR 65750), and preliminary and final determinations of sales at less than fair value on February 19, 1999 (64 FR 8291) and May 6, 1999 (64 FR 24329), respectively. The ITC published preliminary and final determinations of injury on November 25, 1998 (63 FR 65221) and June 23, 1999 (64 FR 33514), respectively.

DATES: Although USTR will accept any comments received during the course of the dispute settlement proceedings, comments should be submitted by July 3, 2000, to be assured of timely consideration by USTR in preparing its first written submission to the panel.

ADDRESSES: Comments may be submitted to Sandy McKinzy, Litigation Assistant, Office of Monitoring and Enforcement, Room 122, Attn: Hot-Rolled Steel Products from Japan, Office of the United States Trade Representative, 600 17th Street, NW., Washington, DC 20508.

FOR FURTHER INFORMATION CONTACT: L. Daniel Mullaney, Assistant General Counsel, at (202) 395–3581.

SUPPLEMENTARY INFORMATION: Pursuant to section 127(b) of the Uruguay Round Agreements Act (URAA) (19 U.S.C. 3537(b)(1)), USTR is providing notice that the Government of Japan submitted a request for the establishment of a WTO dispute settlement panel to examine the imposition of antidumping duties on certain hot-rolled steel products from Japan. At its meeting on March 20, 2000, the WTO Dispute Settlement Body (''DSB'') established the panel, and the panel was composed on May 19, 2000. Pursuant to Article 8.7 of the WTO Dispute Settlement Understanding, the WTO Director-General appointed the following persons to serve as panelists in this dispute: Mr. Harsha V. Singh, Chairman; Mr. Yanyong Phuangrach, Member; and Ms. Lidia di Vico, Member. Under normal circumstances, the panel, which will hold its meetings in Geneva, Switzerland, is expected to issue a report detailing its findings and recommendations within six to nine months after it is established.

Major Issues Raised and Legal Basis of the Complaint

In its request for the establishment of a panel, the Government of Japan challenges the issuance of an antidumping duty order concerning certain hot-rolled carbon steel products from Japan (64 FR 34778 (June 29, 1999)), and the underlying determinations of DOC and the ITC. The Government of Japan alleges that these determinations, as well as the applicable law, regulations, policies and procedures, were not in accordance with several provisions of the Marrakesh Agreement, the General Agreement on Tariffs and Trade 1994 (''GATT 1994'') and the Agreement on Implementation of Article VI of GATT 1994 (''Antidumping Agreement'').

Specific allegations with respect to DOC's dumping margin calculations and critical circumstances findings include:

1. DOC's exclusion of certain home market sales to affiliated companies from the calculation of normal value, based on their price levels, was inconsistent with Articles 2.2.1 and 2.4 of the Antidumping Agreement;

2. DOC's application of facts available to Kawasaki Steel Corporation was inconsistent with the standards of Articles 2.3 and 6.8 and Annex II of the Antidumping Agreement; and the application of facts available to Nippon Steel Corporation and NKK Corporation was inconsistent with the standards of Article 2.4 and 6, in particular 6.1, 6.2, 6.6, 6.7, 6.8, 6.13, and Annexes I and II of the Antidumping Agreement;

3. DOC's calculation of the ''all others'' rate of dumping applicable to companies not investigated, which was based on the average of the rates of the investigated companies, was inconsistent with Article 9.4 of the Antidumping Agreement; and the law on which this calculation was based—section 735(c)(5)(A) of the Tariff Act of 1930, as amended—is itself inconsistent with this article;

4. DOC's calculation of dumping margins, due to the above alleged inconsistencies, is excessive and thus inconsistent with Article 9.3 of the Antidumping Agreement;

5. DOC's findings of critical circumstances, potentially subjecting to antidumping duties imports made up to 90 days prior to the preliminary determination of dumping, were inconsistent with Articles 10.1, 10.2, 10.4, 10.6, and 10.7 of the Antidumping Agreement; and the law under which DOC made these findings—sections 733(e) and 735(a)(3) of the Tariff Act of 1930, as amended, is itself inconsistent with these articles.

Specific allegations with respect to the injury determination by ITC include:

6. ITC's examination of the causal relationship between dumped imports and injury to the domestic industry, which the Government of Japan claims was not objective and not based on an examination of all of the evidence, was inconsistent with Articles 3.1, 3.4, and 3.5 of the Antidumping Agreement;

7. ITC's application of the ''captive production'' provision of U.S. law, which, under certain circumstances, causes the ITC to focus primarily on the merchant market for the subject merchandise, was inconsistent with Articles 3.1, 3.2, 3.4, 3.5, 3.6, and 4.1 of the Antidumping Agreement, because the ITC, due to its application of this provision, did not properly evaluate all relevant economic factors and indices bearing on the state of the U.S. industry, assess injury and causation in relation to the domestic production of the like

product, or undertake an objective examination of all relevant evidence; further, the Government of Japan alleges that the captive production provision itself, section 771(7)(c)(iv) of the Tariff Act of 1930, as amended, is inconsistent with these articles of the Antidumping Agreement.

Other allegations include:

8. The United States' allegedly biased approach to the investigation, including with respect to the critical circumstances determination, the application of ''facts available,'' and the determination of injury, was inconsistent with Article X:3 of GATT 1994;

9. The above laws, regulations, and rulings are not in conformity with obligations under the WTO agreements, and so are inconsistent with Article XVI:4 of the Marrakesh Agreement and Article 18.4 of the Antidumping Agreement.

Public Comment: Requirements for Submissions

Interested persons are invited to submit written comments concerning the issues raised in this dispute. Comments must be in English and provided in fifteen copies to Sandy McKinzy at the address provided above. A person requesting that information contained in a comment submitted by that person be treated as confidential business information must certify that such information is business confidential and would not customarily be released to the public by the submitting person. Confidential business information must be clearly marked ''BUSINESS CONFIDENTIAL'' in a contrasting color ink at the top of each page of each copy.

Information or advice contained in a comment submitted, other than business confidential information, may be determined by USTR to be confidential in accordance with section 135(g)(2) of the Trade Act of 1974 (19 U.S.C. 2155(g)(2)). If the submitting person believes that information or advice may qualify as such, the submitting person—

(1) Must so designate the information or advice;

(2) Must clearly mark the material as ''SUBMITTED IN CONFIDENCE'' in a contrasting color ink at the top of each page of each copy; and

(3) Is encouraged to provide a non-confidential summary of the information or advice. Pursuant to section 127(e) of the URAA (19 U.S.C. 3537(e)), USTR will maintain a file on this dispute settlement proceeding, accessible to the public, in the USTR Reading Room: Room 101, Office of the United States Trade Representative, 600 17th Street, NW., Washington, DC 20508. The public file will include a listing of any comments received by USTR from the public with respect to the proceeding, the U.S. submissions to the panel in the proceeding, the submissions, or non-confidential summaries of submissions, to the panel received from other parties in the dispute, as well as the report of the dispute settlement panel, and, if applicable, the report of the Appellate Body. An appointment to review the public file (Docket WTO/DS–184, ''Hot-Rolled Steel Products—Japan'') may be made by calling Brenda Webb, (202) 395–6186. The Reading Room is open to the public from 9:30 a.m. to 12 noon and 1 p.m. to 4 p.m., Monday through Friday.

A. Jane Bradley,

Assistant U.S. Trade Representative for Monitoring and Enforcement.

[FR Doc. 00–14208 Filed 6–5–00; 8:45 am]

BILLING CODE 3190–01–M

DEPARTMENT OF TRANSPORTATION

Federal Railroad Administration

Notice of Application for Approval of Discontinuance or Modification of a Railroad Signal System or Relief From the Requirements of Title 49 Code of Federal Regulations Part 236

Pursuant to Title 49 Code of Federal Regulations (CFR) Part 235 and 49 U.S.C. 20502(a), the following railroads have petitioned the Federal Railroad Administration (FRA) seeking approval for the discontinuance or modification of the signal system or relief from the requirements of 49 CFR Part 236 as detailed below.

[Docket No. FRA-2000–6924]

Applicant: CSX Transportation, Incorporated, Mr. E.G. Peterson, Assistant Chief Engineer, Design and Construction, 4901 Belfort Road, Suite 130 (S/C J–350), Jacksonville, Florida 32256.

CSX Transportation Incorporated seeks approval of the proposed discontinuance and removal of the manual block system (DCS Operating Rules), on the single secondary track, between Swamp, milepost 0.0 and Wharf, milepost 12.0, near Fall River, Massachusetts, Fall River Subdivision, Albany Service Lane, and redesignation of the secondary track to an industrial track.

The reason given for the proposed changes is that density of traffic no longer warrants this type of train operation.

Any interested party desiring to protest the granting of an application shall set forth specifically the grounds upon which the protest is made, and contain a concise statement of the interest of the Protestant in the proceeding. Additionally, one copy of the protest shall be furnished to the applicant at the address listed above.

All communications concerning this proceeding should be identified by the docket number and must be submitted to the Docket Clerk, DOT Central Docket Management Facility, Room PI–401, Washington, DC 20590–0001. Communications received within 45 days of the date of this notice will be considered by the FRA before final action is taken. Comments received after that date will be considered as far as practicable. All written communications concerning these proceedings are available for examination during regular business hours (9 a.m.–5 p.m.) at DOT Central Docket Management Facility, Room PI–401 (Plaza Level), 400 Seventh Street, SW, Washington, DC 20590–0001. All documents in the public docket are also available for inspection and copying on the internet at the docket facility's Web site at *http://dms.dot.gov.*

FRA expects to be able to determine these matters without an oral hearing. However, if a specific request for an oral hearing is accompanied by a showing that the party is unable to adequately present his or her position by written statements, an application may be set for public hearing.

Issued in Washington, DC on May 25, 2000.

Grady C. Cothen, Jr.,

Deputy Associate Administrator for Safety Standards and Program Development.

[FR Doc. 00–14055 Filed 6–5–00; 8:45 am]

BILLING CODE 4910–06–P

DEPARTMENT OF TRANSPORTATION

Federal Aviation Administration

Emergency Medical Equipment

AGENCY: Federal Aviation Administration (FAA), DOT.

ACTION: Notice of decision.

SUMMARY: This notice is issued pursuant to the Aviation Medical Assistance Act of 1998, which requires the Federal Aviation Administration to determine whether or not to require automatic external defibrillators at airports. To carry out this mandate, the agency reviewed data on the medical capability at the airports most used by passengers to respond to cardiac events. Based

upon this review, the Administrator of the Federal Aviation Administration has determined that it is unnecessary to propose a regulation to require automatic external defibrillators at airports.

FOR FURTHER INFORMATION CONTACT: Robert E. David, AAS–300, Airport Safety and Operations Division, Office of Airport Safety and Standards, Federal Aviation Administration, 800 Independence Avenue, SW, Washington, DC 20591, telephone (202) 267–3085.

SUPPLEMENTARY INFORMATION: On April 24, 1998, the Aviation Medical Assistance Act of 1998 (the Act), Pub. L. 105–170, 49 U.S.C. 44701 was enacted. The Act requires the Administrator of the Federal Aviation Administration to make decisions on whether or not automatic external defibrillators (AED's) should be required:

- On passenger aircraft operated by the air carriers and/or
- At airports.

The act specifies that the decisions shall be made in one of the following three forms:

- A notice of proposed rulemaking requiring AED's, or
- A recommendation to Congress requiring AED's, or
- A notice in the **Federal Register** that AED's should not be required.

Background

The following information has been reported recently in various medical journals and the press:

- Cardiac arrest (the stopping of effective pumping of blood by the heart) reportedly strikes over 350,000 Americans every year, typically those 41 to 65 years old.
- The most common form of treatable cardiac arrest (a substantial portion of all cardiac events) is caused by an abnormal heart rhythm called ''ventricular fibrillation'' (where the heart is still beating, although ineffectively pumping blood.) Ventricular fibrillation is treatable with defibrillation, electric shocks that stimulate the heart to resume beating normally.
- Survival of individuals undergoing ventricular fibrillation can be as high as 90 percent in some circumstances, if defibrillation is provided during the first minute following collapse and subsequent cardiac care is rapidly provided.
- For every minute that defibrillation is delayed, survival is reported to fall about 10 percent, dropping below 50 percent after 6 minutes.
- By providing early electrical correction of ineffective heart pumping, therapeutic defibrillation is more effective than CPR in sustaining life and function in certain situations.

A defibrillator, when place on the chest of a person suffering from ventricular fibrillation, can shock that person's heart back into proper rhythm. Originally defibrillators were bulky and complex units that were designed to be used by specially trained medical personnel, such as doctors or paramedics. These manual-style defibrillators were used as part of an Advanced Life Support (ALS) system.

Defibrillator technology has progressed with the introduction AED's. AED's are lightweight, compact, virtually maintenance-free, simple to use, and can deliver repeated, high-amperage shocks that stun the heart cells long enough to give the heart an opportunity to restore its normal rhythm if possible. Because these battery-powered systems voice-prompt step-by-step guidance, non-medical personnel may use them fairly confidently to assist in certain, especially treatable cardiac emergencies. In fact, both the American Red Cross and the American Heart Association include instruction on these devices in their basic cardiopulmonary resuscitation (CPR) classes. AED's currently cost approximately $3,500 per unit, AEDs have been placed in many public and private buildings and AEDs have been issued to non-medical personnel such as police and firefighters.

The type of AED most commonly used can monitor a person's cardiac function and administer a shock if indicated. The machine determines whether, and when, an individual needs an electric shock. If defibrillation is needed and is successfully performed, further medical interventions may be necessary to stabilize a stricken passenger. Both AED's and manual-style defibrillators produce the same medical results when used on a person experiencing ventricular fibrillation.

Airports Considered

Under Title 14 of the Code of Federal Regulations (CFR) part 139, operators of airports having scheduled air carrier service with aircraft having more than 30 seats are required to have an airport operating certificate issued by the FAA. While not all airports are certificated, the airports most frequently used by passengers are certificated. Part 139 covers all aspects of airport safety for the prevention and mitigation of aircraft accidents; it does not cover passenger medical matters in the airport passenger terminal building or in the aircraft on the ground at the airport. (In general passenger medical care, as opposed to safety, especially on the ground, is within state, not federal, jurisdiction). The drafters of the Act recognized the differences in the environment presented by an aircraft and an airport for an individual experiencing a medical event. In an aircraft, individuals experiencing medical events are isolated by flight from the usual emergency care and must rely on the medical resources in the aircraft. In an airport, individuals experiencing medical events have available to them the usual emergency medical care plus potentially can rely on the full spectrum of modern medicine.

The drafters of the Act provided that the decision regarding requiring AEDs for airports and air carriers could be in different forms. As a result the FAA decided to undertake separate, but parallel and coordinated, efforts in gathering and analyzing information for airports and air carrier aircraft. The decision published here applies only to airports. A decision regarding AEDs on air carrier aircraft will be issued separately.

The report from the Committee on Transportation and Infrastructure that accompanied the Act stated that the FAA should consider the size of the airports in determining if AEDs should be required. The Committee also expressed their expectation that the FAA would take a judicious approach in drawing the line with respect to airports. In view of the Committee report language, FAA decided to focus its effort on airports with an average of 275 or more daily enplanements (100,000 annual enplanements.) In simple terms, an enplanement is counted for each passenger who begins a trip or changes planes at an airport. There are 215 airports that have scheduled air carrier service with an average of 275 or more daily enplanements.

There is quite a variance in the number of enplaned passengers between individual airports. For example, 83 airports have 1 million or more annual enplanements and account for 92 percent of all enplanements. At the top end of this group there are Atlanta's Hartsfield and Chicago's O'Hare that each have more than 30 million annual enplanements. At the other end of the spectrum are airports like Syracuse-Hancock International and Albany International, that each just exceed 1 million annual enplanements.

Similarly, there are 72 airports certificated under part 139 that have more than 250,00 but less than 1 million annual enplanements. These airports account for 5.4 percent of the total annual enplanements.

There are another 60 airports certificated under Part 139 that have more than 100,000 but less than 250,000 annual enplanements. These airports account for 1.5 percent of the total annual enplanements.

The preceding 215 airports (83 + 72 + 60) account for 98.9 percent of total annual enplanements. The remaining airports certificated under Part 139 have less than 100,000 annual enplanements and are part of the airports that comprise the remaining 1.1 percent of annual enplanements.

Airports having this type of scheduled air carrier service are usually owned and operated by units of state or local government. Some of these airports have medical doctors located on the premises; others have units staffed with paramedics located on the airport; while others have the primary emergency medical response in the community respond to medical situations at the airport.

Under Part 139 airports serving scheduled air carrier aircraft with more than 30 seats are required to provide for basic emergency medical care during the operations of these aircraft. This medical care is part of the Aircraft Rescue and Firefighting response to airfield incidents; however, emergency personnel used to meet this requirement frequently respond to medical emergencies throughout the entire airport although this is not required by part 139.

Data Gathering

In order to determine whether or not AED's should be required at airports, the FAA assessed the current capability of airports having scheduled service with air carrier aircraft having more than 30 seats to respond to medical events that an AED could possibly be used. The information sought by the FAA on an airport's capability consisted of answers to the following four questions:

1. Are AED's located on the airport?

2. Are manual-style defibrillators located on the airport?

3. If the answers to both questions 1 and 2 are ''No,'' is there an off-airport response available to cardiac events that occur on the airport?

4. If the answer to question 3 is yes, can the off-airport medical response reach the airport in 6 minutes or less?

(Question 4 is based upon the generally accepted medical guideline that it is necessary to start defibrillation within 6 minutes of the cardiac event; see Background above.)

Analysis of Data

Data were reviewed for 130 airports having 100,000 or more annual enplanements. Information was also collected on defibrillators in general.

A review of the data for the 83 the airports with more than 1 million annual enplanements revealed that all but four had AED's. Of these four, three had manual-style defibrillators. The remaining airport had an off-airport response within 6 minutes. These 83 airports that enplane 92 percent of the total annual enplanements appear to have the medical capability to address cardiac events in which AED's may be of assistance.

Data was collected for 27 of the 72 airports that have 250,000 or more but less than 1 million enplanements. This represents a 37 percent sample. Of the 27 airports, 17 (63 percent) had AED's. None of the remaining 10 airports had a manual-style defibrillator, but six of them had an off-airport response of less than 6 minutes. The remaining four also had an off-airport response but it exceeded 6 minutes. Including the six airports with an off-airport response of less than 6 minutes with the 17 airports that have AED's reveals that 85 percent of the airports in the sample of 27 airports appear to have the medical capability to address cardiac events in which AED's may be of assistance.

Data was collected for 20 of the 60 airports that have 100,000 or more but less than 250,000 enplanements. This represents a 33 percent sample. Of the 20 airports, nine (45 percent) had AED's. None of the remaining 11 airports had a manual-style defibrillator, but five of them had an off-airport response of less than 6 minutes. The remaining six also had an off-airport response but it exceeded 6 minutes. Including the five airports with an off-airport response of less than 6 minutes with the nine airports that have AED's reveals that 70 percent of the airports in the sample of 20 airports appear to have the medical capability to address medical events including those in which AEDs may be of assistance.

For the latter two data groups it would be statistically unreliable to extrapolate the results from the samples of 27 and 20 airports to remaining airports in the group, since neither sample would qualify as a random sample. However, both samples serve to confirm reports that AED's are becoming commonplace. For example, some airports that initially responded that they did not have AED's were contacted to obtain clarification about the availability of off-airport emergency response. In the ensuring months between the first response and the subsequent contact, three of these airports had acquired AED's.

In summary, data gathered on 130 airports indicates that 108 (83 percent) had defibrillators. Including the 11 airports that have an off-airport response rate of less than 6 minutes shows that 119 airports, or 91.5 percent, appear to have the medical capability to address medical events including those in which AEDs may be of assistance.

Decision

The majority of units of state and local government that operate certificate airports, having scheduled air carrier service with 100,000 or more annual enplanements, have already taken the necessary steps to provide for the medical capability to address cardiac events at their individual facilities. In addition, all available information indicates that local acquisition and availability of AED's in public places is increasing.

Finally, it is unclear as to whether the FAA has the authority to require AEDs in an airport. The regulation and the provision of medical care with a state are traditionally state functions that the states have vigorously monitored and controlled. Indeed, the airport serving the vast majority of passengers today have medical care available (including AEDs) without Federal regulation.

In view of the foregoing, the FAA has determined that no regulation will be proposed to require AEDs at airports.

Woodie Woodward,

Acting Associate Administrator for Airports.

[FR Doc. 00–14086 Filed 6–5–00; 8:45 am]

BILLING CODE 4910–13–M

DEPARTMENT OF TRANSPORTATION

Federal Aviation Administration

Index of Administrator's Decisions and Orders In Civil Penalty Actions; Publication

AGENCY: Federal Aviation Administration (FAA), DOT.

ACTION: Notice of publication.

SUMMARY: This notice constitutes the required quarterly publication of an index of the Administrator's decisions and orders in civil penalty cases. This publication represents the quarter ending on March 31, 2000. This publication ensures that the agency is in compliance with statutory indexing requirements.

FOR FURTHER INFORMATION CONTACT: James S. Dillman, Assistant Chief Counsel for Litigation (AGC–400),

Federal Aviation Administration, 400 7th Street, SW., Suite PL 200–A, Washington, DC 20590; telephone (202) 366–4118.

SUPPLEMENTARY INFORMATION: The Administrative Procedure Act requires Federal agencies to maintain and make available for public inspection and copying current indexes containing identifying information regarding materials required to be made available or published. 5 U.S.C. 552(a)(2). In a notice issued on July 11, 1990, and published in the **Federal Register** (55 FR 29148; July 17, 1990), the FAA announced the public availability of several indexes and summaries that provide identifying information about the decisions and orders issued by the Administrator under the FAA's civil penalty assessment authority and the rules of practice governing hearings and appeals of civil penalty actions. 14 CFR Part 13, Subpart G.

The FAA maintains an index of the Administrator's decisions and orders in civil penalty actions organized by order number and containing identifying information about each decision or order. The FAA also maintains a cumulative subject-matter index and digests organized by order number. The indexes are published on a quarterly basis (*i.e.*, January, April, July, and October).

The FAA first published these indexes and digests for all decisions and orders issued by the Administrator through September 30, 1990. 55 FR 45984; October 31, 1990. The FAA announced in that notice that only the subject-matter index would be published cumulatively and that the order number index would be non-cumulative. The FAA announced in a later notice that the order number indexes published in January would reflect all of other civil penalty decisions for the previous year. 58 FR 5044; 1/19/93.

The previous quarterly publications of these indexes have appeared in the **Federal Register** as follows:

Dates of quarter	Federal Register publication
11/1/89–9/30/90	55 FR 45984; 10/31/90.
10/1/90–12/31/90 ..	56 FR 44886; 2/6/91.
1/1/91–3/31/91	56 FR 20250; 5/2/91.
4/1/91–6/30/91	56 FR 31984; 7/12/91.
7/1/91–9/30/91	56 FR 51735; 10/15/91.
10/1/91–12/31/91 ..	57 FR 2299; 1/21/92.
1/1/92–3/31/92	57 FR 12359; 4/9/92.
4/1/92–6/30/92	57 FR 32825; 7/23/92.
7/1/92–9/30/92	57 FR 48255; 10/22/92.
10/1/92–12/31/92 ..	58 FR 5044; 1/19/93.
1/1/93–3/31/93	58 FR 21199; 4/19/93.
4/1/93–6/30/93	58 FR 42120; 8/6/93.
7/1/93–9/30/93	58 FR 58218; 10/29/93.
10/1/93–12/31/93 ..	59 FR 5466; 2/4/94.
1/1/94–3/31/94	59 FR 22196; 4/29/94.
4/1/94–6/30/94	59 FR 39618; 8/3/94.
7/1/94–12/31/94	60 FR 4454; 1/23/95.
1/1/95–3/31/95	60 FR 19318; 4/17/95.
4/1/95–6/30/95	60 FR 36854; 7/18/95.
7/1/95–9/30/95	60 FR 53228; 10/12/95.
10/1/95–12/31/95 ..	61 FR 1972; 1/24/96.
1/1/96–3/31/96	61 FR 16955; 4/18/96.
4/1/96–6/30/96	61 FR 37526; 7/18/96.
7/1/96–9/30/96	61 FR 54833; 10/22/96.
10/1/96–12/31/96 ..	62 FR 2434; 1/16/97.
1/1/97–3/31/97	62 FR 24533; 5/2/97.
4/1/97–6/30/97	62 FR 38339; 7/17/97.
7/1/97–9/30/97	62 FR 53856; 10/16/97.
10/1/97–12/31/97 ..	63 FR 3373; 1/22/98.
1/1/98–3/31/98	63 FR 19559; 4/20/98.
4/1/98–6/30/98	63 FR 37914; 7/14/98.
7/1/98–9/30/98	63 FR 57729; 10/28/98.
10/1/98–12/31/98 ..	64 FR 1855; 1/12/99.
1/1/99–3/31/99	64 FR 24690; 5/7/99.
4/1/99–6/30/99	64 FR 43236; 8/9/99.
7/1/99–9/30/99	64 FR 58879; 11/1/99.
10/1/99–12/31/99 ..	65 FR 1654; 1/11/00.

The civil penalty decisions and orders, and the indexes and digests are available in FAA offices. Also, the Administrator's civil penalty decisions have been published by commercial publishers (Hawkins Publishing Company and Clark Boardman Callaghan) and are available on computer on-line services (Westlaw, LEXIS, Compuserve and FedWorld).

A list of the addresses of the FAA offices where the civil penalty decisions may be reviewed and information regarding these commercial publications and computer databases are provided at the end of this notice. Information regarding the accessibility of materials filed in recently initiated civil penalty cases in FAA civil penalty cases at the DOT Docket and over the Internet also appears at the end of this notice.

Civil Penalty Actions—Orders Issued By The Administrator

Order Number Index

(This index includes all decisions and orders issued by the Administrator from January 1, 2000, through March 31, 2000.)

2000–1—Ronald L. Gatewood

2/2/00 CP97EA0071, DMS No. FAA–1997–3292

2000–2—Ryan International Airlines, Inc.

2/2/00 CP99GL0011, DMS No. FAA–1999–5805

2000–3—Warbelow's Air Ventures, Inc.

2/2/00 CP97AL0012

2000–4—Ryan International Airlines, Inc.

3/3/00 CP99GL0011, DMS No. FAA–1999–5805

2000–5—Blue Ridge Airlines

3/23/00 CP97NM0024

2000–6—Atlantic Coast Airlines

3/29/00 CP97SO0047

2000–7—Daniel A. Martinez

3/30/00 CP99NM0012, DMS No. FAA–1999–5984

Civil Penalty Actions—Orders Issued by the Administrator

Subject Matter Index

(Current as of March 31, 2000.)

Administrative Law Judges—Power and Authority:
Continuance of hearing ..... 91–11 Continental Airlines; 92–29 Haggland.
Credibility findings ..... 90–21 Carroll; 92–3 Park; 93–17 Metcalf; 94–3 Valley Air; 94–4 Northwest Aircraft Rental; 95–25 Conquest; 95–26 Hereth; 97–20 Werle; 97–30 Emery Worldwide Airlines; 97–32 Florida Propeller; 98–18 General Aviation; 99–6 Squire; 2000–3 Warbelow's.
Default Judgment ..... 91–11 Continental Airlines; 92–47 Cornwall; 94–8 Nunez; 94–22 Harkins; 94–28 Toyota; 95–10 Diamond; 97–28 Continental Airlines; 97–33 Rawlings; 98–13 Air St. Thomas.
Discovery ..... 89–6 American Airlines; 91–17 KDS Aviation; 91–54 Alaska Airlines; 92–46 Sutton-Sautter; 93–10 Costello.
Expert Testimony ..... 94–21 Sweeney.
Granting extensions of time ..... 90–27 Gabbert.
Hearing location ..... 92–50 Cullop.
Hearing request ..... 93–12 Langton; 94–6 Strohl; 94–27 Larsen; 94–37 Houston; 95–19 Rayner.
Initial Decision ..... 92–1 Costello; 92–32 Barnhill.

Lateness of ..... 97–31 Sanford Air.
Should include requirement to file appeal brief ..... 98–5 Squire.
Jurisdiction:
Generally ..... 90–20 Degenhardt; 90–33 Cato; 92–1 Costello; 92–32 Barnhill.
After issuance of order assessing civil penalty ..... 94–37 Houston; 95–19 Rayner; 97–33 Rawlings.
When complaint is withdrawn ..... 94–39 Kirola.
Motion for Decision ..... 92–73 Wyatt; 92–75 Beck; 92–76 Safety Equipment; 93–11 Merkley; 96–24 Horizon; 98–20 Koenig.
No authority to extend due date for late Answer without showing of good cause. (See also Answer). 95–28 Atlantic World Airways; 97–18 Robinson; 98–4 Larry's Flying Service.
Notice of Hearing ..... 92–31 Eaddy.
Regulate proceedings ..... 97–20 Werle.
Sanction ..... 90–37 Northwest Airlines; 91–54 Alaska Airlines; 94–22 Harkins; 94–28 Toyota.
Service of law judges by parties ..... 97–18 Robinson.
Vacate initial decision ..... 90–20 Degenhardt; 92–32 Barnhill 95–6 Sutton.
Aerial Photography ..... 95–25 Conquest Helicopters.
Agency Attorney ..... 93–13 Medel.
Air Carrier/Aircraft Operator:
Agent/independent contractor of ..... 92–70 USAir.
Careless or Reckless ..... 92–48 & 92–70 USAir; 93–18 Westsair Commuter.
Duty of care Non-delegable ..... 92–70 USAir; 96–16 Westair Commuter; 96–24 Horizon; 97–8 Pacific Av. d/b/a Inter-Island Helicopters; 99–12 TWA; 2000–3 Warbelow's.
Employee ..... 93–18 Westair Commuter; 97–8 Pacific Av. d/b/a Inter-Island Helicopters; 99–12 TWA; 99–14 Alika Aviation; 2000–1 Gatewood; 2000–3 Warbelow's.
Ground Security Coordinator, Failure to provide ..... 96–16 Westair Commuter.
Intoxicated Passenger .....
Allowing to board ..... 98–11 TWA.
Serving alcohol to ..... 98–11 TWA.
Liability for acts/omissions of employees in scope of employment. 98–11 TWA, 99–12 TWA; 99–14 Alika Aviation; 2001–1 Gatewood; 2000–3 Warbelow's.
Use of unqualified pilot ..... 99–15 Blue Ridge.
Aircraft Maintenance (See also Airworthiness, Maintenance Manual):
Generally ..... 90–11 Thunderbird Accessories; 91–8 Watts Agricultural Aviation; 93–36 & 94–3 Valley Air; 94–38 Bohan; 95–11 Horizon; 96–3 America West Airlines; 97–8 Pacific Av. d/b/a Inter-Island Helicopters; 97–9 Alphin; 97–10 Alphin; 97–11 Hampton; 97–30 Emery Worldwide Airlines; 97–31 Sanford Air; 98–18 General Aviation; 99–5 Africa Air; 2000–1 Gatewood; 2000–3 Warbelow's.
Acceptable methods, techniques, and practices ..... 96–3 America West Airlines.
After certificate revocation ..... 92–73 Wyatt.
Airworthiness Directive, compliance with ..... 96–18 Kilrain; 97–9 Alphin.
Inspection ..... 96–18 Kilrain, 97–10 Alphin; 99–14 Alika Aviation.
Major alterations Failed to prove ..... 99–5 Africa Air.
Major/minor repairs ..... 96–3 America West Airlines.
Minimum Equipment List (MEL) ..... 94–38 Bohan; 95–11 Horizon; 97–11 Hampton; 97–21 Delta; 97–30 Emery Worldwide Airlines; 2000–3 Warbelow's.
Operation when maintenance entries not made ..... 2000–1 Gatewood.
Propellers ..... 2000–1 Gatewood.
Aircraft Records.
Aircraft Operation ..... 91–8 Watts Agricultural Aviation; 2000–1 Gatewood.
Flight and Duty Time ..... 96–4 South Aero.
Maintenance Records ..... 91–8 Watts Agricultural Aviation; 94–2 Woodhouse; 97–30 Emery Worldwide Airlines; 97–31 Sanford Air; 98–18 General Aviation; 2000–1 Gatewood; 2000–3 Warbelow's.
Description of maintenance ..... 2000–1 Gatewood.
''Yellow tags'' ..... 91–8 Watts Agricultural Aviation.
Aircraft-Weight and Balance (See Weight and Balance)
Airmen:
Airline Transport Pilot certificates requirement in foreign aviation by Part 135 operator. 99–11 Evergreen Helicopters.
Altitude deviation ..... 92–49 Richardson & Shimp.
Careless or Reckless ..... 91–12 & 91–31 Terry & Menne; 92–8. Watkins; 92–49 Richardson & Shimp; 92–47 Cornwall; 93–17 Metcalf; 93–29 Sweeney: 96–17 Fenner.
Flight time limitations ..... 93–11 Merkley.
Flight time records. ..... 99–7 Premier Jets.
Follow ATC Instruction ..... 91–12 & 91–31 Terry & Menne; 92–8 Watkins; 92–49 Richardson & Shimp.
Low Flight ..... 92–47 Cornwall; 93–17 Metcalf.
Owner's responsibility ..... 96–17 Fenner; 2000–1 Gatewood.
Pilots ..... 91–12 & 91–31 Terry & Menne; 92–8 Watkins; 92–49 Richardson & Shimp; 93–17 Metcalf.
See and Avoid ..... 93–29 Sweeney.

Unqualified for Part 135 flight ..... 99–15 Blue Ridge.

Air Operations Area (AOA):

Air Carrier Responsibilities ..... 90–19 Continental Airlines; 91–33 Delta Air Lines; 94–1 Delta Air Lines.

Airport Operator Responsibilities ..... 90–19 Continental Airlines; 91–4 [Airport Operator]; 91–18 [Airport Operator]; 91–40 [Airport Operator]; 91–41 [Airport Operator]; 91–58 [Airport Operator]; 96–1 [Airport Operator] 98–7 LAX.

Badge Display ..... 91–1 [Airport Operator]; 91–33 Delta air Lines; 99–1 American Airlines.

Definition of ..... 90–19 Continental Airlines; 91–4 [Airport Operator]; 91–58 [Airport Operator].

Exclusive Areas ..... 90–19 Continental Airlines; 91–4 [Airport Operator] 91–58 [Airport Operator]; 98–7 LAX.

Airport Security Program (ASP):

Compliance with ..... 91–4 [Airport Operator]; 91–18 [Airport Operator]; 91–40 [Airport Operator]; 91–41 [Airport Operator]; 91–58 [Airport Operator]; 94–1 Delta air Lines; 96–1 [Airport Operator]; 97–23 Detroit Metropolitan; 98–7 LAX; Airport Operator.

Responsibilities ..... 90–12 Continental Ailrines; 91–4 [Airport Operator]; 91–18 [Airport Operator]; 91–40 [Airport Operator]; 91–41 [Airport Operator]; 91–58 [Airport Operator]; 96–1 [Airport Operator]; 97–23 Detroit Metropolitan.

Air Traffic Control (ATC):

Error as mitigating factor ..... 91–12 & 91–31 Terry & Menne.

Error as exonerating factor ..... 91–12 & 91–31 Terry & Menne; 92–40 Wendt.

Ground Control ..... 91–12 Terry & Menne; 93–18 Westair Commuter.

Local Control ..... 91–12 Terry & Menne.

Tapes & Transcripts ..... 91–12 Terry & Menne; 92–49 Richardson & Shimp.

Airworthiness ..... 91–8 Watts Agricultural Aviation; 92–10 Flight Unlimited; 92–48 & 92–70 USAir: 94–2 Woodhouse; 95–11 Horizon; 96–3 America West Airlines; 96–18 Kilrain; 94–25 US Air; 97–8 Pacific Av. d/b/a Inter-Island Helicopters; 97–9 Alphin; 97–10 Alphin; 97–11 Hampton; 97–21 Delta; 97–30 Emery Worldwide Airlines; 97–32 Florida Propeller; 98–18 General Aviation; 99–14 Alika Aviation; 2000–3 Warbelow's.

Amicus Curiae Briefs ..... 90–25 Gabbert.

Answer:

ALJ may not extend due date for late Answer unless good cause shown. ..... 95–28 Atlantic World Airways; 97–18 Robinson; 97–33 Rawlings; 98–4 Larry's Flying Service.

Reply to each numbered paragraph in the complaint required ..... 98–21 Blankson.

Timeliness of answer ..... 90–3 Metz; 90–15 Playter; 92–32 Barnhill; 92–47 Cornwall; 92–75 Beck; 92–76 Safety Equipment; 94–5 Grant; 94–29 Sutton; 94–30 Columna; 94–43 Perez; 95–10 Diamond; 95–28 Atlantic World Airways; 97–18 Robinson; 97–19 Missirlian; 97–33 Rawlings; 97–38 Air St. thomas; 98–4 Larry's Flying Service; 98–13 Air St. Thomas; 99–8 McDermott; 99–9 Lifelite Medical Air Transport; 99–16 Dorfman.

Timeliness not at issue once hearing held ..... 99–16 Dorfman.

What constitutes ..... 92–32 Barnhill; 92–75 Beck; 97–19 Missirlian.

Appeals (See also Filing; Timeliness; Mailing Rule):

Briefs, Generally ..... 89–4 Metz; 91–45 Park; 92–17 Giuffrida; 92–19 Cornwall; 92–39 Beck; 93–24 Steel City Aviation; 93–28 Strohl; 94–23 Perez; 95–13 Kilrain.

Additional Appeal Brief ..... 92–3 Park; 93–5 Wendt; 93–6 Westair Communter; 93–28 Strohl; 94–4 Northwest Aircraft; 94–18 Luxemburg; 94–29 Sutton; 97–22 Sanford Air; 97–34 Continental Airlines; 97–38 Air St. Thomas; 98–18 General Aviation; 99–11 Evergreen Helicopter; 2000–7 Martinez.

Appeal dismissed as premature ..... 95–19 Rayner.

Appeal dismissed as moot after complaint withdrawn ..... 92–9 Griffin.

Appellate arguments ..... 92–70 USAir.

Court of Appeals, appeal to (See Federal Courts)

Good Cause for Late-Filed Brief or Notice of Appeal ..... 90–3 Metz; 90–27 Gabbert; 90–39 Hart; 91–10 Graham; 91–24 Esau; 91–48 Wendt; 91–50 & Costello; 92–3 Park; 92–17 Giuffrida; 92–39 Beck; 92–41 Moore & Sabre Associates; 92–52 Beck; 92–57 Detroit Metro Wayne Co. Airport; 92–69 McCabe; 93–23 Allen; 93–27 Simmons; 93–31 Allen; 95–2 Meronek; 95–9 Woodhouse; 95–25 Conquest; 97–6 WRA Inc.; 97–7 Stalling; 97–28 Continental; 97–38 Air St. Thomas; 98–1V. Taylor; 98–13 Air St. Thomas; 99–4 Warbelow's Air Ventures.

Informal Conference:

Conduct of, not on appeal ..... 99–14 Alika Aviation.

Motion to Vacate construed as a brief ..... 91–11 Continental Airlines.

Perfecting an Appeal, generally ..... 92–17 Giuffrida; 92–19 Cornwall; 92–23 Beck; 94–23 Perez; 95–13 Kilrain; 96–5 Alphin Aircraft; 98–20 Koenig.

Extension of Time for (good cause for) ..... 89–8 Thunderbird Accessories; 91–26 Britt Airways; 91–32 Bargen; 91–50 Costello; 93–2 & 93–3 Wendt; 93–24 Steel City Aviation; 93–32 Nunez; 98–5 Squire; 98–15 Squire; 99–4 Warbelow's Air Ventures.

Failure to ..... 89–1 Gressani; 89–7 Zenkner; 90–11 Thunderbird Accessories; 90–35 P. Adams; 90–39 Hart; 91–7 Pardue; 91–10 Graham; 91–20 Bargen; 91–43, 91–44, 91–46 & 91–47 Delta Air Lines; 92–11 Alilin; 92–15 Dillman; 92–18 Bargen; 92–34 Carrell; 92–35 Bay Land Aviation; 92–36 Southwest Airlines; 92–45 O'Brien; 92–56 Montauk Caribbean Airways; 92–67 USAir; 92–68 Weintraub; 92–78 TWA; 93–7 Dunn; 93–8 Nunez; 93–20 Smith; 93–23 & 93–31 Allen; 93–34 Castle Aviation; 93–35 Steel City Aviation; 94–12 Bartusiak; 94–24 Page; 94–26 French Aircraft; 94–34 American International Airways; 94–35 American International Airways; 94–36 American International Airways; 95–4 Hanson; 95–22 & 96–5 Alphin Aircraft; 96–2 Skydiving Center; 96–13 Winslow; 97–3 [Airport Operator], 97–6 WRA, Inc.; 97–15 Houston & Johnson County; 97–35 Gordon Air Services; 97–36 Avcon; 97–37 Roush; 98–10 Rawlings; 99–2 Oxygen Systems.

Notice of appeal construed as appeal brief ..... 92–39 Beck; 94–15 Columna; 95–9 Woodhouse; 95–23 Atlantic World Airways; 96–20 Missirlian; 97–2 Sanford Air; 98–5 Squire; 98–17 Blue Ridge; 98–23 Instead Balloon Services; 99–3 Justice; 99–8 McDermott; 2000–7 Martinez.

What Constitutes ..... 90–4 Metz; 90–27 Gabbert; 91–45 Park; 92–7 West; 92–17 Giuffrida; 92–39 Beck; 93–7 Dunn; 94–15 Columna; 94–23 Perez; 94–30 Columna; 95–9 Woodhouse; 95–23 Atlantic World Airlways; 96–20 Missirlian; 97–2 Sanford Air.

Service of brief:

Fail to serve other party ..... 92–17 Giuffrida; 92–19 Cornwall.

Timeliness of Notice of Appeal ..... 90–3 Metz; 90–39 Hart; 91–50 Costello; 92–7 West; 92–69 McCabe; 93–37 Simmons; 95–2 Meronek; 95–9 Woodhouse; 95–15 Alphin Aviation; 96–14 Midtown Neon Sign Corp.; 97–7 & 97–17 Stallings; 97–28 Continental; 97–38 Air St. Thomas; 98–1 V. Taylor; 98–13 Air St. Thomas; 98–16 Blude Ridge; 98–17 Blue Ridge; 98–21 Blankson.

Withdrawal of ..... 89–2 Lincoln-Walker; 89–3 Sittko; 90–4 Nordrum; 90–5 Sussman; 90–6 Dabaghian; 90–7 Steele; 90–8 Jenkins; 90–9 Van Zandt; 90–13 O'Dell; 90–14 Miller; 90–28 Puleo; 90–29 Sealander; 90–30 Steidinger; 90–34 D. Adams; 90–40 & 90–41 Westair Commuter Airlines; 91–1 Nestor; 91–5 Jones; 91–6 Lowery; 91–13 Kreamer; 91–14 Swanton; 91–15 Knipe; 91–16 Lopez; 91–19 Bayer; 91–21 Britt Airways; 91–22 Omega Silicone Co.; 91–23 Continental Airlines; 91–25 Sanders; 91–27 Delta Air Lines; 91–28 Continental Airlines; 91–29 Smith; 91–34 GASPRO; 91–35 M. Graham; 91–36 Howard; 91–37 Vereen; 91–39 America West; 91–42 Pony Express; 91–49 Shields; 91–56 Mayhan; 91–57 Britt Airways; 91–59 Griffin; 91–60 Brinton; 92–2 Koller; 92–4 Delta Air Lines; 92–6 Rothgeb; 92–12 Bertetto; 92–20 Delta Air Lines; 92–21 Cronberg; 92–22, 92–23, 92–24, 92–25, 92–26 & 92–28 Delta Air Lines; 92–33 Port Authority of NY & NJ; 92–42 Jayson; 92–43 Delta Air Lines; 92–44 Owens; 92–53 Humble; 92–54 & 92–55 Northwest Airlines; 92–60 Costello; 92–61 Romerdahl; 92–62 USAir; 92–63 Schaefer; 92–64 & 92–65 Delta Air Lines; 92–66 Sabre Associates & Moore; 92–79 Delta Air Lines; 93–1 Powell & Co.; 93–4 Harrah; 93–14 Fenske; 93–15 Brown; 93–21 Delta Air Lines; 93–22 Yannotone; 93–26 Delta Air Lines; 93–33 HPH Aviation; 94–9 B & G Instruments; 94–10 Boyle; 94–11 Pan American Airways; 94–13 Boyle; 94–14 B & G Instruments; 94–16 Ford; 94–33 Trans World Airlines; 94–41 Dewey Towner; 94–42 Taylor; 95–1 Diamond Aviation; 95–3 Delta Air Lines; 95–5 Araya; 95–6 Sutton; 95–7 Empire Airlines; 95–20 USAir, 95–21 Faisca; 95–24 Delta Air Lines; 96–7 Delta Air Lines; 96–8 Empire Airlines; 96–10 USAir, 96–11 USAir, 96–12 USAir; 96–21 Houseal; 97–4 [Airport Operator]; 97–5 WestAir; 97–25 Martin & Jaworski; 97–26 Delta Air Lines; 97–27 Lock Haven; 97–39 Delta Air Lines; 98–9 Continental Express;

Assault (See also Battery, and Passenger Misconduct) ..... 96–6 Ignatov; 97–12 Mayer; 99–16 Dorfman.

''Attempt'' ..... 89–5 Schultz.

Attorney Conduct Obstreperous or Disruptive ..... 94–39 Kirola.

Attorney Fees (See EAJA)

Aviation Safety Reporting System ..... 90–39 Hart; 91–12 Terry & Menne; 92–49 Richardson & Shimp.

Baggage Matching ..... 98–6 Continental; 99–12 TWA.

Balloon (Hot Air) ..... 94–2 Woodhouse.

Bankruptcy ..... 91–2 Continental Airlines.

Battery (See also Assault and Passenger Misconduct) ..... 96–6 Ignatov; 97–12 Mayer; 99–16 Dorfman.

Certificates and Authorizations:

Surrender when revoked ..... 92–73 Wyatt.
Civil Air Security National Airport Inspection Program (CASNAIP) .. 91–4 [Airport Operator]; 91–18 [Airport Operator]; 91–40 [Airport Operator]; 91–41 [Airport Operator]; 91–58 [Airport Operator].
Civil Penalty Amount (See Sanction)
Closing Argument (See Final Oral Argument)
Collateral Estoppel ..... 91–8 Watts Agricultural Aviation.
Complaint:
Complainant Bound By ..... 90–10 Webb; 91–53 Koller.
No Timely Answer to (See Answer)
Partial Dismissal/Full Sanction ..... 94–19 Pony Express; 94–40 Polynesian Airways.
Staleness (See Stale Complaint Rule)
Statute of Limitations (See Statute of Limitations)
Timeliness of complaint ..... 91–51 Hagwood; 93–13 Medel; 94–7 Hereth; 94–5 Grant.
Withdrawal of ..... 94–39 Kirola; 95–6 Sutton.
Compliance & Enforcement Program:
(FAA Order No. 2150.3A) ..... 89–5 Schultz; 89–6 American Airlines; 91–38 Esau; 92–5 Delta Air Lines.
Compliance/Enforcement Bulletin 92–3 ..... 96–19 [Air Carrier].
Sanction Guidance Table ..... 89–5 Schultz; 90–23 Broyles; 90–33 Cato; 90–37 Northwest Airlines; 91–3 Lewis; 92–5 Delta Air Lines; 98–18 General Aviation; 2000–3 Warbelow's.
Concealment of Weapons (See Weapons Violations)
Consolidation of Cases ..... 90–12, 90–18 & 90–19 Continental Airlines.
Constitutionality of Regulations (See also Double Jeopardy). ..... 90–12 Continental Airlines; 90–18 Continental Airlines; 90–19 Continental Airlines; 90–37 Northwest Airlines; 96–1 [Airport Operator]; 96–25 USAir; 97–16 Mauna Kea; 97–34 Continental Airlines; 98–6 Continental Airlines; 98–11 TWA; 99–1 American; 99–12 TWA.
Continuance of Hearing ..... 90–25 Gabbert; 92–29 Haggland.
Corrective Action (See Sanction)
Counsel:
Leave to withdraw ..... 97–24 Gordon.
No right to assigned counsel (See Due Process)
Credibility of Witnesses:
Generally ..... 95–25 Conquest Helicopters; 95–26 Hereth; 97–32 Florida Propeller.
Bias ..... 97–9 Alphin.
Defer to ALJ determination of ..... 90–21 Carroll; 92–3 Park; 93–17 Metcalf; 95–26 Hereth; 97–20 Werle; 97–30 Emery Worldwide Airlines; 97–32 Florida Propeller; 98–11 TWA; 98–18 General Aviation; 99–6 Squire; 2000–3 Warbelow's.
Experts (See also Witness) ..... 90–27 Gabbert; 93–17 Metcalf; 96–3 America West Airlines.
Impeachment ..... 94–4 Northwest Aircraft Rental.
Reliability of eyewitness identification ..... 97–20 Werle.
De facto answer ..... 92–32 Barnhill.
Delay in initiating action ..... 90–21 Carroll.
Deliberative Process Privilege ..... 89–6 American Airlines; 90–12, 90–18 & 90–19 Continental Airlines.
Deterrence ..... 89–5 Schultz; 92–10 Flight Unlimited; 95–16 Mulhall; 95–17 Larry's Flying Service; 97–11 Hampton.
Discovery:
Deliberative Process Privilege ..... 89–6 American Airlines; 90–12 90–18 & 90–19 Continental Airlines.
Depositions, generally ..... 91–54 Alaska Airlines.
Notice of deposition ..... 91–54 Alaska Airlines.
Failure to Produce ..... 90–18 & 90–19 Continental Airlines; 91–17 KDS Aviation; 93–10 Costello.
Sanction for ..... 91–17 KDS Aviation; 91–54 Alaska Airlines.
Regarding Unrelated Case ..... 92–46 Sutton-Sautter.
Double Jeopardy ..... 95–8 Charter Airlines; 96–26 Midtown.
Due Process:
Generally ..... 89–6 American Airlines; 90–12 Continental Airlines; 90–37 Northwest Airlines; 96–1 [Airport Operator]; 97–8 Pacific Av. d/b/a Inter-Island Helicopters; 99–12 TWA.
Before finding a violation ..... 90–27 Gabbert.
Multiple violations ..... 96–26 Midtown; 97–9 Alphin.
No right to assigned counsel ..... 97–8 Pacific Av. d/b/a Inter-Island Helicopters; 97–9 Alphin; 99–6 Squire.
Violation of ..... 89–6 American Airlines; 90–12 Continental Airlines; 90–37 Northwest Airlines; 96–1 [Airport Operator]; 97–8 Pacific Av. d/b/a Inter-Island Helicopters; 98–19 Martin & Jaworski.
EAJA:
Adversary Adjudication ..... 90–17 Wilson; 91–17 & 91–52 KDS Aviation; 94–17 TCI; 95–12 Toyota.
Amount of award ..... 95–27 Valley Air.
Appeal from ALJ decision ..... 95–9 Woodhouse.
Expert witness fees ..... 95–27 Valley Air.
Final disposition ..... 96–22 Woodhouse.

Further proceedings ..... 91–52 KDS Aviation.
Jurisdiction over appeal ..... 92–74 Wendt; 96–22 Woodhouse.
Late-filed application ..... 96–22 Woodhouse.
Other expenses ..... 93–29 Sweeney.
Position of agency ..... 95–27 Valley Air.
Prevailing party ..... 91–52 KDS Aviation.
Special circumstances ..... 95–18 Pacific Sky.
Substantial justification ..... 91–52 & 92–71 KDS Aviation; 93–9 Wendt; 95–18 Pacific Sky; 95–27 Valley Air; 96–15 Valley Air; 98–19 Martin & Jaworski.
Supplementation of application ..... 95–27 Valley Air.
Evidence (See Proof & Evidence)
Ex Parte Communications ..... 93–10 Costello; 95–16 Mulhall; 95–19 Rayner.
Expert Witnesses (See Witness)
Extension of Time
By Agreement of Parties ..... 89–6 American Airlines; 92–41 Moore & Sabre Associates.
Dismissal by Decisionmaker ..... 89–7 Zenkner; 90–39 Hart.
Good Cause for ..... 89–8 Thunderbird Accessories.
Objection to ..... 89–8 Thunderbird Accessories; 93–3 Wendt.
Who may grant ..... 90–27 Gabbert.
Federal Courts ..... 92–7 West; 97–1 Midtown Neon Sign; 98–8 Carr; 99–12 TWA.
Hazardous materials case appeals ..... 97–1 Midtown Neon Sign; 98–8 Carr; 2000–4 Ryan International.
Federal Rules of Civil Procedure ..... 91–17 KDS Aviation.
Federal Rules of Evidence (See also Proof & Evidence):
Admissions ..... 96–25 USAir, 99–5 Africa Air; 99–14 Alika Aviation.
Evidentiary Admissions are rebuttable ..... 95–5 Africa Air.
Settlement Offers (Rule 408) ..... 95–16 Mulhall; 96–25 USAir; 99–5 Africa Air.
Exclusion of admission in settlement offers ..... 99–5 Africa Air; 99–14 Alika Aviation.
Statements against interest ..... 2000–3 Warbelow's.
Subsequent Remedial Measures ..... 96–24 Horizon; 96–25 USAir.
Final Oral Argument ..... 92–3 Park.
Firearms (See Weapons)
Ferry Flights ..... 95–8 Charter Airlines.
Filing (See also Appeals; Timeliness)
Burden to provide date of filing ..... 97–11 Hampton Air; 98–1 V. Taylor.
Discrepancy between certificate of service and postmark ..... 98–16 Blue Ridge.
Service on designated representative ..... 98–19 Martin & Jaworski.
Flight & Duty Time:
Circumstances beyond crew's control:
Generally ..... 95–8 Charter Airlines.
Foreseeability ..... 95–8 Charter Airlines.
Late freight ..... 95–8 Charter Airlines.
Weather ..... 95–8 Charter Airlines.
Competency check flights ..... 96–4 South Aero.
Limitation of Duty Time ..... 95–8 Charter Airlines; 94–4 South Aero.
Limitation of Flight Time ..... 95–8 Charter Airlines.
''Other commercial flying'' ..... 95–8 Charter Airlines.
Recordkeeping:
Individual flight time records for each Part 135 pilot ..... 99–7 Premier Jets.
Flights ..... 94–20 Conquest Helicopters.
Freedom of Information Act ..... 93–10 Costello.
Fuel Exhaustion ..... 95–26 Hereth.
Guns (See Weapons)
Ground Security Coordinator, (See also Air Carrier; Standard Security Program): Failure to provide. 96–16 WestAir Commuter.
Transportation of, generally ..... 90–37 Northwest Airlines; 92–76 Safety Equipment; 92–77 TCI; 94–19 Pony Express; 94–28 Toyota; 94–31 Smalling; 95–12 Toyota; 95–16 Mulhall; 96–26 Midtown.
Civil Penalty, generally ..... 92–77 TCI; 94–28 Toyota; 94–31 Smalling; 95–16 Mulhall; 96–26 Midtown; 98–2 Carr.
Corrective Action ..... 92–77 TCI; 94–28 Toyota.
Culpability ..... 92–77 TCI; 94–28 Toyota; 94–31 Smalling.
Financial hardship ..... 95–16 Mulhall.
Installment plan ..... 95–16 Mulhall.
First-time violation ..... 92–77 TCI; 94–28 Toyota; 94–31 Smalling.
Gravity of violation ..... 92–77; TCI; 94–28 Toyota; 94–31 Smalling; 92–26 Midtown; 98–2 Carr.
Minimum penalty ..... 95–16 Mulhall; 98–2 Carr.
Number of violations ..... 95–16 Mulhall; 96–26 Midtown Neon Sign; 98–2 Carr.
Redundant violations ..... 95–16 Mulhall; 96–26 Midtown Neon Sign; 98–2 Carr.
Criminal Penalty ..... 92–77 TCI; 94–31 Smalling.
EAJA, applicability of ..... 94–17 TCI; 95–12 Toyota.
Individual violations ..... 95–16 Mulhall.
Judicial review under 49 U.S.C. 5123 ..... 97–1 Midtown Neon Sign; 98–8 Carr; 2000–4 Ryan International.
Knowingly ..... 92–77 TCI; 94–19 Pony Express; 94–31 Smalling.
Specific hazard class transported:
Combustible:

Paint ..... 95–16 Mulhall.
Corrosive:
Wet Battery ..... 94–28 Toyota Motor Sales.
Other ..... 92–77 TCI.
Explosive:
Fireworks ..... 94–31 Smalling; 98–2 Carr.
Flammable:
Paint ..... 96–26 Midtown Neon Sign.
Turpentine ..... 95–16 Mulhall.
Radioactive ..... 94–19 Pony Express.
Hearing:
Failure of party to attend ..... 98–23 Instead Balloon Services.
Informal Conference ..... 94–4 Northwest Aircraft Rental.
Initial Decision: What constitutes ..... 92–32 Barnhill.
Interference with crewmembers (See also Passenger Misconduct; Assault). ..... 92–3 Park; 96–6 Ignatov; 97–12 Mayer; 98–11 TWA; 98–12 Stout.
Interlocutory Appeal ..... 89–6 American Airlines; 91–54 Alaska Airlines; 93–37 Airspect; 94–32 Detroit Metropolitan; 98–25 Gotbetter.
Internal FAA Policy &/or Procedures ..... 89–6 American Airlines; 90–12 Continental Airlines; 92–73 Wyatt.
Jurisdiction:
After initial decision ..... 90–20 Degenhardt; 90–33 Cato; 92–32 Barnhill; 93–28 Strohl.
After Order Assessing Civil Penalty ..... 94–37 Houston; 95–19 Rayner.
After withdrawal of complaint ..... 94–39 Kirola.
$50,000 Limit ..... 90–12 Continental Airlines.
EAJA cases ..... 92–74 Wendt; 96–22 Woodhouse.
HazMat cases ..... 92–76 Safety Equipment.
NTSB ..... 90–11 Thunderbird Accessories.
Statutory authority to regulate flights entirely outside of U.S. questioned. ..... 99–11 Evergreen Helicopters.
Knowledge of concealed weapon (See also Weapons Violation) ..... 89–5 Schultz; 90–20 Degenhardt.
Laches (See Delay in initiating action)
Mailing Rule, generally ..... 89–7 Zenkner; 90–3 Metz; 90–11 Thunderbird Accessories; 90–39 Hart; 98–20 Koenig.
Does not extend time for filing a request for hearing ..... 2000–2 Ryan International.
Overnight express delivery ..... 89–6 American Airlines.
Maintenance (See Aircraft Maintenance).
Maintenance Instruction ..... 93–36 Valley Air.
Maintenance Manual ..... 90–11 Thunderbird Accessories; 96–25 USAir.
Air carrier maintenance manual ..... 96–3 America West Airlines.
Approved/accepted repairs ..... 96–3 America West Airlines.
Manufacturer's maintenance manual ..... 96–3 America West Airlines; 97–31 Sanford Air; 97–32 Florida Propeller; 2000–3 Warbelow's.
Minimum Equipment List (MEL) (See Aircraft Maintenance).
Mootness, appeal dismissed as moot ..... 92–9 Griffin; 94–17 TCI.
National Aviation Safety Inspection Program (NASIP) ..... 90–16 Rocky Mountain.
National Transportation Safety Board Administrator not bound by NTSB case law. ..... 91–12 Terry & Menne; 92–49 Richardson & Shimp; 93–18 Westair Commuter.
Lack of Jurisdiction ..... 90–11 Thunderbird Accessories; 90–17 Wilson; 92–74 Wendt.
Notice of Hearing: Receipt ..... 92–31 Eaddy.
Notice of Proposed Civil Penalty:
Initiates Action ..... 91–9 Continental Airlines.
Signature of agency attorney ..... 93–12 Langton.
Withdrawal of ..... 90–17 Wilson.
Operate, generally ..... 91–12 & 91–31 Terry & Menne; 93–18 Westair Commuter; 96–17 Fenner.
Responsibility of aircraft owner/operator for actions of pilot ..... 96–17 Fenner; 2000–1 Gatewood.
Responsibility of aircraft owner/operator for employee's flying unairworthy aircraft. ..... 2000–1 Gatewood.
Oral Argument before Administrator on appeal:
Decision to hold ..... 92–16 Wendt.
Instructions for ..... 92–27 Wendt.
Order Assessing Civil Penalty:
Appeal from ..... 92–1 Costello; 95–19 Rayner.
Timeliness of request for hearing ..... 95–19 Rayner.
Withdrawal of ..... 84–4 Metz; 90–16 Rocky Mountain; 90–22 USAir; 95–19 Rayner; 97–7 Stalling.
Parachuting ..... 98–3 Fedele.
Parts Manufacturer Approval (PMA): Failure to obtain ..... 93–19 Pacific Sky Supply.
Passenger List ..... 99–13 Falcon Air Express.
Passenger Misconduct ..... 92–3 Park.
Assault/Battery ..... 96–6 Ignatov; 97–12 Mayer, 98–11 TWA, 99–16 Dorfman.
Compliance with Fasten Seat Belt Sign ..... 99–16 Alika Aviation.
Interference with a crewmember ..... 96–6 Ignatov; 97–12 Mayer; 98–11 TWA; 98–12 Stout; 99–16 Dorfman.
Smoking ..... 92–37 Giuffrida; 99–6 Squire.
Hearing loss and failure to obey instructions re: not smoking. ..... 99–6 Squire.

Stowing carry-on items ..... 97–12 Mayer; 99–16.
Penalty (See Sanction; Hazardous Materials)
Person ..... 93–18 Westair Commuter.
Prima Facie Case (See also Proof & Evidence) ..... 95–26 Hereth; 96–3 America West Airlines.
Proof & Evidence (See also Federal Rules of Evidence):
Admissions ..... 99–5 Africa Air; 2000–3 Warbelow's.
Evidentiary admission is rebuttable ..... 99–5 Africa Air.
Affirmative Defense ..... 92–13 Delta Air Lines; 92–72 Giuffrida; 98–6 Continental Airlines.
Burden of Proof ..... 90–26 & 90–43 Waddell; 91–3 Lewis; 91–30 Trujillo; 92–13 Delta Air Lines; 92–72 Giuffrida; 93–29 Sweeney; 97–32 Florida Propeller; 2000–3 Warbelow's.
Circumstantial Evidence ..... 90–12, 90–19 & 91–9 Continental Airlines; 93–29 Sweeney; 96–3 America West Airlines; 97–10 Alphin; 97–11 Hampton; 97–32 Florida Propeller; 98–6 Continental Airlines.
Credibility (See Administrative Law Judges; Credibility of Witnesses)
Criminal standard rejected ..... 91–12 Terry & Menne; 2000–3 Warbelow's.
Closing Arguments (See also Final Oral Argument) ..... 94–20 Conquest Helicopters.
Extra-record material ..... 95–26 Hereth; 96–24 Horizon.
Hearsay ..... 92–72 Giuffrida; 97–30 Emery Worldwide Airlines; 98–11 TWA.
New evidence ..... 94–4 Northwest Aircraft Rental; 96–23 Kilrain; 99–15 Blue Ridge.
Offer of proof ..... 97–32 Florida Propeller.
Preponderance of evidence ..... 90–11 Thunderbird Accessories; 90–12 Continental Airlines; 91–12 & 91–31 Terry & Menne; 92–72 Giuffrida; 97–30 Emery Worldwide Airlines; 97–31 Sanford Air; 97–32 Florida Propeller; 98–3 Fedele; 98–6 Continental Airlines; 98–11 TWA.
Presumption that message on ATC tape is received as transmitted. 91–12 Terry & Menne; 92–49 Richardson & Shimp.
Presumption that a gun is deadly or dangerous ..... 90–26 Waddell; 91–30 Trujillo.
Presumption that owner gave pilot permission ..... 96–17 Fenner.
Prima facie case ..... 95–26 Hereth, 96–3 America West; 98–6 Continental Airlines.
Settlement offer ..... 95–16 Mulhall; 96–25 USAir; 99–5 Africa Air
Admission as part of settlement offer excluded ..... 99–5 Africa Air; 99–14 Alika Aviation.
Subsequent remedial measures ..... 96–24 Horizon; 96–25 USAir.
Substantial evidence ..... 92–72 Giuffrida.
Pro Se Parties:
Special Considerations ..... 90–11 Thunderbird Accessories; 90–3 Metz; 95–25 Conquest
Prosecutorial Discretion ..... 89–6 American Airlines; 90–23 Broyles; 90–38 Continental Airlines; 91–41 [Airport Operator]; 92–46 Sutton-Sautter; 92–73 Wyatt; 95–17 Larry's Flying Service.
Administrator does not review Complainant's decision not to bring action against anyone but respondent. 98–2 Carr.
Reconsideration:
Denied by ALJ ..... 89–4 & 90–3 Metz.
Granted by ALJ ..... 92–32 Barnhill.
Late request for ..... 97–14 Pacific Aviation; 98–14 Larry's Flying Service; 2000–5 Blue Ridge.
Petition based on new material ..... 96–23 Kilrain.
Repetitious petitions ..... 96–9 [Airport Operator]; 2000–5 Blue Ridge.
Stay of order pending ..... 90–31 Carroll; 90–32 Continental Airlines.
Redundancy, enhancing safety ..... 97–11 Hampton.
Remand ..... 89–6 American Airlines; 90–16 Rocky Mountain; 90–24 Bayer; 91–51 Hagwood; 91–54 Alaska Airlines; 92–1 Costello; 92–76 Safety Equipment; 94–37 Houston; 2000–5 Blue Ridge.
Repair Station ..... 90–11 Thunderbird Accessories; 92–10 Flight Unlimited; 94–2 Woodhouse; 97–9 Alphin; 97–10 Alphin; 97–31 Sanford Air; 97–32 Florida Propeller; 2000–1 Gatewood.
Request for Hearing ..... 94–37 Houston; 95–19 Rayner.
Constructive withdrawal of ..... 97–7 Stalling; 98–23 Instead Balloon Services.
Timeliness of request ..... 93–12 Langton; 95–19 Rayner; 2000–2 Ryan International.
Untimely request for hearing will be excused for good cause ..... 94–27 Larsen; 93–12 Langton; 2000–2 Ryan International.
Rules of Practice (14 CFR Part 13, Subpart G):
Applicability of ..... 90–12, 90–18 & 90–19 Continental Airlines; 91–17 KDS Aviation.
Challenges to ..... 90–12, 90–18 & 90–19, Continental Airlines; 90–21 Carroll; 90–37 Northwest Airlines.
Effect of Changes in ..... 90–21 Carroll; 90–22 USAir; 90–38 Continental Airlines.
Initiation of Action ..... 91–9 Continental Airlines.
Runway incursions ..... 92–40 Wendt; 93–18 Westair Commuter.
Sanction:

Ability to Pay ..... 89–5 Schultz; 90–10 Webb; 91–3 Lewis; 91–38 Esau; 92–10 Flight Unlimited; 92–32 Barnhill; 92–37 & 92–72 Giuffrida; 92–38 Cronberg; 92–46 Sutton-Sautter; 92–51 Koblick; 93–10 Costello; 94–4 Northwest Aircraft Rental; 94–20 Conquest Helicopters; 95–16 Mulhall; 95–17 Larry's Flying Service; 97–8 Pacific Av. d/b/a Inter-Island Helicopters; 97–11 Hampton; 97–16 Mauna Kea; 98–4 Larry's Flying Service; 98–11 TWA; 99–12 TWA; 99–15 Blue Ridge; 2000–3 Warbelow's.

Agency policy:

ALJ bound by ..... 90–37 Northwest Airlines; 92–46 Sutton-Sautter; 96–19 [Air Carrier]; 2000–3 Warbelow's.

Changes after complaint ..... 97–7 & 97–17 Stallings.

Statements of (*e.g.,* FAA Order 2150.3A, Sanction Guidance Table, memoranda pertaining to). 90–19 Continental Airlines; 90–23 Broyles; 90–33 Cato; 90–37 Northwest Airlines; 92–46 Sutton-Sautter; 96–4 South Aero; 96–19 [Air Carrier]; 96–25 USAir.

Compliance Disposition ..... 97–23 Detroit Metropolitan.

Consistency with Precedent ..... 96–6 Ignatov; 96–26 Midtown; 97–30 Emery Worldwide Airlines; 98–12 Stout; 98–18 General Aviation.

But when precedent is based on superceded sanction policy 96–19 [Air Carrier].

Corrective Action ..... 91–18 [Airport Operator]; 91–40 [Airport Operator]; 91–41 [Airport Operator]; 92–5 Delta Air Lines; 93–18 Westair Commuter; 94–28 Toyota; 96–4 South Aero; 96–19 [Air Carrier]; 97–16 Mauna Kea; 97–23 Detroit Metropolitan; 98–6 Continental Airlines; 98–22 Northwest Airlines; 99–12 TWA; 99–14 Alika Aviation.

Discovery (See Discovery)

Factors to consider ..... 89–5 Schultz; 90–23 Broyles; 90–37 Northwest Airlines; 91–3 Lewis; 91–18 [Airport Operator]; 91–40 [Airport Operator]; 91–41 [Airport Operator]; 92–10 Flight Unlimited; 92–46 Sutton-Sautter; 92–51 Koblick; 94–28 Toyota; 95–11 Horizon; 96–19 [Air Carrier]; 96–26 Midtown; 97–16 Mauna Kea; 98–2 Carr; 99–15 Blue Ridge; 2000–3 Warbelow's.

First-Time Offenders ..... 89–5 Schultz; 92–5 Delta Air Lines; 92–51 Koblick.

HazMat (See Hazardous Materials)

Inexperience ..... 92–10 Flight Unlimited.

Installment Payments ..... 95–16 Mulhall; 95–17 Larry's Flying Service.

Maintenance ..... 95–11 Horizon; 96–3 America West Airlines; 97–8 Pacific Av. d/b/a Inter-Island Helicopters; 97–9 Alphin; 97–10 Alphin; 97–11 Hampton; 97–30 Emery Worldwide Airlines; 99–14 Alika Aviation; 2000–3 Warbelow's.

Maximum ..... 90–10 Webb; 91–53 Koller; 96–19 [Air Carrier].

Minimum (HazMat) ..... 95–16 Mulhall; 96–26 Midtown; 98–2 Carr.

Modified ..... 89–5 Schultz; 90–11 Thunderbird Accessories; 91–38 Esau; 92–10 Flight Unlimited; 92–13 Delta Air Lines; 92–32 Barnhill.

Partial Dismissal of Complaint/Full Sanction (See also Complaint). 94–19 Pony Express; 94–40 Polynesian Airways.

Sanctions in specific cases:

Failure to comply with Security Directives ..... 98–6 Continental Airlines; 99–12 TWA.

Passenger/baggage matching ..... 98–6 Continental Airlines; 99–12 TWA.

Passenger Misconduct ..... 97–12 Mayer; 98–12 Stout.

Person evading screening (See also Screening) ..... 97–20 Werle.

Pilot Deviation ..... 92–8 Watkins.

Test object detection ..... 90–18 & 90–19 Continental Airlines; 96–19 [Air Carrier].

Unairworthy aircraft ..... 97–8 Pacific Av. d/b/a Inter-Island helicopters; 97–9 Alphin; 98–18 General Aviation; 99–14 Alika Aviation; 2000–3 Warbelow's.

Unauthorized access ..... 90–19 Continental Airlines; 90–37 Northwest Airlines; 94–1 Delta Air Lines: 98–7 LAX.

Unqualified pilot ..... 99–15 Blue Ridge.

Weapons violations ..... 90–23 Broyles; 90–33 Cato; 91–3 Lewis; 91–38 Esau; 92–32 Barnhill; 92–46 Sutton-Sautter; 92–51 Koblick; 94–5 Grant; 97–7 & 97–17 Stallings.

Screening of Persons and Carry-on Items (See also Test Object Detection):

Air carrier failure to detect weapon Sanction ..... 94–44 American Airlines.

Air carrier failure to match bag with passenger ..... 98–6 Continental Airlines; 99–12 TWA.

Entering Sterile Areas ..... 90–24 Bayer; 92–58 Hoedl; 97–20 Werle; 98–20 Koenig.

Sanction for indivdual evading screening (See also Sanction) ..... 97–20 Werle; 98–20 Koenig.

Security Directive re: screening of carry-on items given to passenger by person unknown to the passenger. 2000–6 Atlantic Coast Aviation.

Security (See Screening of Persons, Standard Security Program, Test Object Detection, Unauthorized Access, Weapons Violations):

Agency directives, violation of ..... 99–12 TWA.

Giving false information about carrying a weapon or explosive on board an aircraft. 98–24 Stevens.

Sealing of Record ..... 97–13 Westair Commuter; 97–28 Continental Airlines.

Separation of Functions ..... 90–12 Continental Airlines; 90–18 Continental Airlines; 90–19 Continental Airlines; 90–21 Carroll; 90–38 Continental Airlines; 93–13 Medel.

Service (See also Mailing Rule; Receipt):
- Date of when no certificate of service ..... 2000–2 Ryan International.
- Of NPCP ..... 90–22 USAir; 97–20 Werle.
- Of FNPCP ..... 93–13 Medel.
- Receipt of document sent by mail ..... 92–31 Eaddy; 2000–5 Blue Ridge.
- Return of certified mail ..... 97–7 & 97–17 Stallings; 2000–5 Blue Ridge.
- Valid Service ..... 92–18 Bargen; 98–19 Martin & Jaworski.

Settlement ..... 91–50 & 92–1 Costello; 95–16 Mulhall; 99–10 Azteca.
- Request for hearing not withdrawn ..... 99–10 Azteca.

Skydiving ..... 98–3 Fedele.
Smoking ..... 92–37 Giuffrida; 94–18 Luxemburg; 99–6 Squire.
Stale Compliant Rule:
- If NPCP not sent ..... 97–20 Werle.

Standard Security Program (SSP):
- Compliance with ..... 90–12, 90–18 & 90–19 Continental Airlines; 91–33 Delta Air Lines; 91–55 Continental Airlines; 92–13 & 94–1 Delta Air Lines; 96–19 [Air Carrier]; 98–22 Northwest Airlines; 99–1 American.
- Checkpoint Security Coordinator ..... 98–22 Northwest Airlines.
- Ground Security Coordinator ..... 96–16 Westair Communter.
- When an airline is required to have a security program ..... 2000–6 Atlantic Coast Aviation.

Statute of Limitations ..... 97–20 Werle.
Stay of Orders ..... 90–31 Carroll; 90–32 Continental Airlines.
- Pending judicial review ..... 95–14 Charter Airlines.

Strict Liability ..... 89–5 Schultz; 90–27 Gabbert; 91–18 [Airport Operator]; 91–40 [Airport Operator]; 91–58 [Airport Operator]; 97–23 Detroit Metropolitan; 98–7 LAX; 2000–3 Warbelow's.

Test Object Detection ..... 90–12, 90–18, 90–19, 91–9 & 91–55 Continental Airlines; 92–13 Delta Air Lines; 96–19 [Air Carrier].
- Proof of violation ..... 90–18, 90–19 & 91–9 Continental Airlines; 92–13 Delta Air Lines.
- Sanction ..... 90–18 & 90–19 Continental Airlines; 96–19 [Air Carrier].

Timeliness (See also Complaint; Filing; Mailing Rule; and Appeals)
- Burden to prove date of filing ..... 97–11 Hampton Air; 98–1 V. Taylor.
- Of response to NPCP ..... 90–22 USAir.
- Of complaint ..... 91–51 Hagwood; 93–13 Medel; 94–7 Hereth.
- Of initial decision ..... 97–31 Sanford Air.
- Of NPCP ..... 92–73 Wyatt.
- Of petition to reconsider ..... 2000–5 Blue Ridge.
- Of reply brief ..... 97–11 Hampton.
- Of request for hearing ..... 93–12 Langton; 95–19 Rayner; 2000–2 Ryan International.
- Of EAJA application (See EAJA—Final disposition, EAJA—Jurisdiction)

Unapproved Parts (see also Parts Manufacturer Approval) ..... 93–19 Pacific Sky Supply.
Unauthorized Access:
- To aircraft ..... 90–12 & 90–19 Continental Airlines; 94–1 Delta Air Lines.
- To Air Operations Area (AOA) ..... 90–37 Northwest Airlines; 91–18 [Airport Operator]; 91–40 [Airport Operator]; 91–58 [Airport Operator]; 94–1 Delta Air Lines.

Visual Cues Indicating Runway, Adequacy of ..... 92–40 Wendt.
Weapons Violations, generally ..... 89–5 Schultz; 90–10 Webb; 90–20 Degenhardt; 90–23 Broyles; 90–33 Cato; 90–26 & 90–43 Waddell; 91–3 Lewis; 91–30 Trujillo; 91–38 Esau; 91–53 Koller; 92–32 Barnhill; 92–46 Sutton-Sautter; 92–51 Koblick; 92–59 Petek-Jackson; 94–5 Grant; 94–44 American Airlines.
- Concealed weapon ..... 89–5 Schultz; 92–46 Sutton-Sautter; 92–51 Koblick.
- "Deadly or Dangerous" ..... 90–26 & 90–43 Waddell; 91–30 Trujillo; 91–38 Esau.
- First-time Offenders ..... 89–5 Schultz.
- Intent to commit violation ..... 89–5 Schultz; 90–20 Degenhardt; 90–23 Broyles; 90–26 Waddell; 91–3 Lewis; 91–53 Koller.
- Knowledge Of Weapon Concealment (See also Knowledge) ..... 89–5 Schultz; 90–20 Degenhardt.
- Sanction (See Sanction)

Weight and Balance ..... 94–40 Polynesian Airways.
- Passenger list ..... 99–13 Falcon Air Express.

Witnesses (See also Credibility):
- Absence of, Failure to subpoena ..... 92–3 Park; 98–2 Carr.
- Expert testimony Evaluation of ..... 93–17 Metcalf; 94–3 Valley Air; 94–21 Sweeney; 96–3 America West Airlines; 96–15 Valley Air; 97–9 Alphin; 97–32 Florida Propeller.
- Expert witness fees (See EAJA)

REGULATIONS (TITLE 14 CFR, UNLESS OTHERWISE NOTED)

1.1 (maintenance) ..... 94–38 Bohan; 97–11 Hampton.
1.1 (major alteration) ..... 99–5 Africa Air.
1.1 (major repair) ..... 96–3 America West Airlines.
1.1 (minor repair) ..... 96–3 America West Airlines.

1.1 (operate)	91–12 & 91–31 Terry & Menne; 93–18 Westair Commuter; 96–17 Fenner.
1.1 (person)	93–18 Westair Commuter.
1.1 (propeller)	96–15 Valley Air.
13.16	90–16 Rocky Mountain; 90–22 USAir; 90–37 Northwest Airlines; 90–38 & 91–9 Continental Airlines; 91–18 [Airport Operator]; 91–51 Hagwood; 92–1 Costello; 92–46 Sutton-Sautter; 93–13 Medel; 93–28 Strohl; 94–27 Larsen; 94–37 Houston; 94–31 Smalling; 95–19 Rayner; 96–26 Midtown Neon Sign; 97–1 Midtown Neon Sign; 97–9 Alphin; 98–18 General Aviation; 2000–2 Ryan International; 2000–3 Warbelow's.
13.201	90–12 Continental Airlines.
13.202	90–6 American Airlines; 92–76 Safety Equipment.
13.203	90–12 Continental Airlines; 90–21 Carroll; 90–38 Continental Airlines.
13.204	
13.205	90–20 Degenhardt; 91–17 KDS Aviation; 91–54 Alaska Airlines; 92–32 Barnhill; 94–32 Detroit Metropolitan; 94–39 Kirola; 95–16 Mulhall; 97–20 Werle.
13.206	
13.207	94–39 Kirola.
13.208	90–21 Carroll; 91–51 Hagwood; 92–73 Wyatt; 92–76 Safety Equipment; 93–13 Medel; 93–28 Strohl; 94–7 Hereth; 97–20 Werle; 98–4 Larry's.
13.209	90–3 Metz; 90–15 Playter; 91–18 [Airport Operator]; 92–32 Barnhill; 92–47 Cornwall; 92–75 Beck; 92–76 Safety Equipment; 94–8 Nunez; 94–5 Grant; 94–22 Harkins; 94–29 Sutton; 94–30 Columna; 95–10 Diamond; 95–28 Atlantic World Airways; 97–7 Stalling; 97–18 Robinson; 97–33 Rawlings; 98–21 Blankson.
13.210	92–19 Cornwall; 92–75 Beck; 92–76 Safety Equipment; 93–7 Dunn; 93–28 Strohl; 94–5 Grant; 94–30 Columna; 95–28 Atlantic World Airways; 96–17 Fenner; 97–11 Hampton; 97–18 Robinson; 97–38 Air St. Thomas; 98–16 Blue Ridge.
13.211	89–6 American Airlines; 89–7 Zenkner; 90–3 Metz; 90–11 Thunderbird Accessories; 90–39 Hart; 91–24 Esau; 92–1 Costello; 92–9 Griffin; 92–18 Bargen; 92–19 Cornwall; 92–57 Detroit Metro. Wayne County Airport; 92–74 Wendt; 92–76 Safety Equipment; 93–2 Wendt; 94–5 Grant; 94–18 Luxemburg; 94–29 Sutton; 95–12 Toyota; 95–28 Valley Air; 97–7 Stalling; 97–11 Hampton; 98–4 Larry's Flying Service; 98–19 Martin & Jaworski; 98–20 Koenig; 99–2 Oxygen Systems; 2000–2 Ryan International; 2000–5 Blue Ridge.
13.212	90–11 Thunderbird Accessories; 91–2 Continental Airlines; 99–2 Oxygen Systems.
13.213	
13.214	91–3 Lewis.
13.215	93–28 Strohl; 94–39 Kirola.
13.216	
13.217	91–17 KDS Aviation.
13.218	89–6 American Airlines; 90–11 Thunderbird Accessories; 90–39 Hart; 92–9 Griffin; 92–73 Wyatt; 93–19 Pacific Sky Supply; 94–6 Strohl; 94–27 Larsen; 94–37 Houston; 95–18 Rayner; 96–16 WestAir; 96–24 Horizon; 98–20 Koenig.
13.219	89–6 American Airlines; 91–2 Continental; 91–54 Alaska Airlines; 93–37 Airspect; 94–32 Detroit Metro. Wayne County Airport; 98–25 Gotbetter.
13.220	89–6 American Airlines; 90–20 Carroll; 91–8 Watts Agricultural Aviation; 91–17 KDS Aviation; 91–54 Alaska Airlines; 92–46 Sutton-Sautter.
13.221	92–29 Haggland; 92–31 Eaddy; 92–52 Cullop.
13.222	92–72 Giuffrida; 96–15 Valley Air.
13.223	91–12 & 91–31 Terry & Menne; 92–72 Giuffrida; 95–26 Hereth; 96–15 Valley Air; 97–11 Hampton; 97–31 Sanford Air; 97–32 Florida Propeller; 98–3 Fedele; 98–6 Continental Airlines; 2000–3 Warbelow's.
13.224	90–26 Waddell; 91–4 [Airport Operator]; 92–72 Giuffrida; 94–18 Luxemburg; 94–28 Toyota; 95–25 Conquest; 96–17 Fenner; 97–32 Florida Propeller; 98–6 Continental Airlines; 2000–3 Warbelow's.
13.225	97–32 Florida Propeller.
13.226	
13.227	90–21 Carroll; 95–26 Hereth.
13.228	92–3 Park.
13.229	
13.230	92–19 Cornwall; 95–26 Hereth; 96–24 Horizon.
13.231	92–3 Park.

13.232	89–5 Schultz; 90–20 Degenhardt; 92–1 Costello; 92–18 Bargen; 92–32 Barnhill; 93–28 Strohl; 94–28 Toyota; 95–12 toyota; 95–16 Mulhall; 96–6 Ignatov; 98–18 General Aviation.
13.233	89–1 Gressani; 89–4 Metz; 89–5 Schultz; 89–7 Zenkner; 89–8 Thunderbird Accessories; 90–3 Metz; 90–11 Thunderbird Accessories; 90–19 Continental Airlines; 90–20 Degenhardt; 90–25 & 90–27 Gabbert; 90–35 P. Adams; 90–19 Continental Airlines; 90–39 Hart; 91–2 Continental Airlines; 91–3 Lewis; 91–7 Pardue; 91–8 Watts Agricultural Aviation; 91–10 Graham; 91–11 Continental Airlines; 91–12 Bargen; 91–24 Esau; 91–26 Britt Airways; 91–31 Terry & Menne; 91–32 Bargen; 91–43 & 91–44 Delta; 91–45 Park; 91–46 Delta; 91–47 Delta; 91–48 Wendt; 91–52 KDS Aviation; 91–53 Koller; 92–1 Costello; 92–3 Park; 92–7 West; 92–11 Alilin; 92–15 Dillman; 92–16 Wendt; 92–18 Bargen; 92–19 Cornwall; 92–27 Wendt; 92–32 Barnhill; 92–34 Carrell; 92–35 Bay Land Aviation; 92–36 Southwest Airlines; 92–39 Beck; 92–45 O'Brien; 92–52 Beck; 92–56 Montauk Caribbean Airways; 92–57 Detroit Metro. Wayne Co. Airport; 92–67 USAir; 92–69 McCabe; 92–72 Giuffrida; 92–74 Wendt; 92–78 TWA; 93–5 Wendt; 93–6 Westair Commuter; 93–7 Dunn; 93–8 Nunez; 93–19 Pacific Sky Supply; 93–23 Allen; 93–27 Simmons; 93–28 Strohl; 93–31 Allen; 93–32 Nunez; 94–9 B&G Instruments; 94–10 Boyle; 94–12 Bartusiak; 94–15 Columna; 94–18 Luxemburg; 94–23 Perez; 94–24 Page; 94–26 French Aircraft; 94–28 toyota; 95–2 Meronek; 95–9 Woodhouse; 95–13 Kilrain; 95–23 Atlantic World Airways; 95–25 Conquest; 95–26 Hereth; 96–1 [Airport Operator; 96–2 Skydiving Center; 97–1 Midtown Neon Sign; 97–2 Sanford Air; 97–7 Stalling; 97–22 Sanford Air; 97–24 Gordon Air; 97–31 Sanford Air; 97–33 Rawlings; 97–38 Air St. Thomas; 98–4 Larry's Flying Service; 98–3 Fedele; Continental Airlines 98–6; LAX 98–7; 98–10 Rawlings; 98–15 Squire; 98–18 General Aviation; 98–19 Martin & Jaworski; 98–20 Koenig; 99–2 Oxygen System's; 99–11 Evergreen Helicopters.
13.234	90–19 Continental Airlines; 90–31 Carroll; 90–32 & 90–38 Continental Airlines; 91–4 [Airport Operator]; 95–12 Toyota; 96–9 [Airport Operator]; 96–23 Kilrain; 2000–5 Blue Ridge.
13.235	90–11 Thunderbird Accessories; 90–12 Continental Airlines; 90–15 Playter; 90–17 Wilson; 92–7 West.
Part 14	92–74 & 93–2 Wendt; 95–18 Pacific Sky Supply.
14.01	91–17 & 92–71 KDS Aviation.
14.04	91–17, 91–52 & 92–71 KDS Aviation; 93–10 Costello; 95–27 Valley Air.
14.05	90–17 Wilson.
14.12	95–27 Valley Air.
14.20	91–52 KDS Aviation; 96–22 Woodhouse.
14.22	93–29 Sweeney.
14.23	98–19 Martin & Jaworski.
14.26	91–52 KDS Aviation; 95–27 Valley Air.
14.28	95–9 Woodhouse.
21.181	96–25 USAir.
21.303	93–19 Pacific Sky Supply; 95–18 Pacific Sky Supply.
25.787	97–30 Emery Worldwide Airlines.
25.855	92–37 Giuffrda; 97–30 Emergy Worldwide Airlines.
39.3	92–10 Flight Unlimited; 94–4 Northwest Aircraft Rental.
43.3	92–73 Wyatt; 97–31 Sanford Air; 98–18 General Aviation; 2000–1 Gatewood.
43.5	96–18 Kilrain; 97–31 Sanford Air.
43.9	91–8 Watts Agricultural Aviation; 97–31 Sanford Air; 98–4 Larry's Flying Service.
43.13	90–11 Thunderbird Accessories; 94–3 Valley Air; 94–38 Bohan; 96–3 America West Airlines; 96–25 USAir; 97–9 Alphin; 97–10 Alphin; 97–30 Emery Worldwide Airlines; 97–31 Sanford Air; 97–32 Florida Propeller.
43.15	90–25 & 90–27 Gabbert; 91–8 Watts Agricultural Aviation; 94–2 Woodhouse; 96–18 Kilrain.
61.3	99–11 Evergreen Helicopters.
65.15	92–73 Wyatt.
65.81	2000–1 Gatewood.
65.92	92–73 Wyatt.
91.7	97–8 Pacific Av. d/b/a/ Inter-Island Helicopters; 97–16 Mauna Kea; 98–18 General Aviation; 99–5 Africa Air; 2000–1 Gatewood; 2000–3 Warbelow's.
91.8 (91.11 as of 8/18/90)	92–3 Park.

91.9 (91.13 as of 8/18/90)	90–15 Playter; 91–12 & 91–31 Terry & Menne; 92–8 Watkins; 92–40 Wendt; 92–48 USAir; 92–49 Richardson & Shimp; 92–47 Cornwall; 92–70 USAir; 93–9 Wendt; 93–17 Metcalf; 93–18 Westair Commuter; 93–29 Sweeney; 94–29 Sutton; 95–26 Hereth; 96–17 Fenner.
91.11	96–6 Ignatov; 97–12 Mayer; 98–12 Stout; 99–16 Dorfman.
91.29 (91.7 as of 8/18/90)	91–8 Watts Agricultural Aviation; 92–10 Flight Unlimited; 94–4 Northwest Aircraft Rental.
91.65 (91.111 as of 8/18/90)	91–29 Sweeney; 94–21 Sweeney.
91.67 (91.113 as of 8/18/90)	91–29 Sweeney.
91.71	97–11 Hampton.
91.75 (91.123 as of 8/18/90)	91–12 & 91–31 Terry & Menne; 92–8 Watkins; 92–40 Wendt; 92–49 Richardson & Shimp; 93–9 Wendt.
91.79 (91.119 as of 8/18/90)	90–15 Playter; 92–47 Cornwall; 93–17 Metcalf.
91.87 (91.129 as of 8/18/90)	91–12 & 91–31 Terry & Menne; 92–8 Watkins.
91.103	95–26 Hereth.
91.111	96–17 Fenner.
91.113	96–17 Fenner.
91.151	95–26 Hereth.
91.173 (91.417 as of 8/18/90)	91–8 Watts Agricultural Aviation.
91.203	99–5 Africa Air.
91.205	98–18 General Aviation.
91.213	97–11 Hampton.
91.403	97–8 Pacific Av. d/b/a Inter-Island Helicopters; 97–31 Sanford Air.
91.405	97–16 Mauna Kea; 98–4 Larry's Flying Service; 98–18 General Aviation; 99–5 Africa Air; 2000–1 Gatewood.
91.407	98–4 Larry's Flying Service; 99–5 Africa Air; 2000–1 Gatewood.
91.417	98–18 General Aviation.
91.517	98–12 Stout.
91.703	94–29 Sutton.
105.29	98–3 Fedele; 98–19 Martin & Jaworski.
107.1	90–19 Continental Airlines; 90–20 Degenhardt; 91–4 [Airport Operator]; 91–58 [Airport Operator]; 98–7 LAX.
107.9	98–7 LAX.
107.13	90–12 & 90–19 Continental Airlines; 91–4 [Airport Operator]; 91–18 [Airport Operator]; 91–40 [Airport Operator]; 91–41 [Airport Operator]; 91–58 [Airport Operator]; 96–1 [Airport Operator]; 97–23 Detroit Metropolitan; 98–7 LAX.
107.20	90–24 Bayer; 92–58 Hoedl; 97–20 Werle; 98–20 Koenig.
107.21	89–5 Schultz; 90–10 Webb; 90–22 Degenhardt; 90–23 Broyles; 90–26 & 90–43 Waddell; 90–33 Cato; 90–39 Hart; 91–3 Lewis; 91–10 Graham; 91–30 Trujillo; 91–38 Esau; 91–53 Koller; 92–32 Barnhill; 92–38 Cronberg; 92–46 Sutton-Sautter; 92–51 Koblick; 92–59 Petek-Jackson; 94–5 Grant; 94–31 Smalling; 97–7 Stalling.
107.25	94–30 Columna.
108.5	90–12, 90–18, 90–19, 91–2 & 91–9 Continental Airlines; 91–33 Delta Air Lines; 91–54 Alaska Airlines; 91–55 Continental Airlines; 92–13 & 94–1 Delta Air Lines; 94–44 American Airlines; 96–16 WestAir; 96–19 [Air Carrier]; 98–22 Northwest Airlines; 99–1 American; 99–12 TWA; 2000–6 Atlantic Coast Aviation.
108.7	90–18 & 90–19 Continental Airlines; 99–1 American.
108.9	98–22 Northwest Airlines.
108.10	96–16 WestAir.
108.11	90–23 Broyles; 90–26 Waddell; 91–3 Lewis; 92–46 Sutton-Sautter; 94–44 American Airlines.
108.13	90–12 & 90–19 Continental Airlines; 90–37 Northwest Airlines.
108.18	98–6 Continental Airlines; 99–12 TWA; 2000–6 Atlantic Coast Aviation.
121.133	90–18 Continental Airlines.
121.153	92–48 & 92–70 USAir; 95–11 Horizon; 96–3 America West Airlines; 96–24 Horizon; 96–25 USAir; 97–21 Delta; 97–30 Emery Worldwide Airlines.
121.221	97–30 Emery Worldwide Airlines.
121.317	92–37 Giuffrida; 94–18 Luxemburg; 99–6 Squire; 99–16 Dorfman.
121.318	92–37 Giuffrida.
121.367	90–12 Continental Airlines; 96–25 USAir.
121.571	92–37 Giuffrida.
121.575	98–11 TWA.
121.577	98–11 TWA.
121.589	97–12 Mayer.
121.628	95–11 Horizon; 97–21 Delta; 97–30 Emery Worldwide Airlines.
121.693	99–13 Falcon Air Express.
121.697	99–13 Falcon Air Express.
135.1	95–8 Charter Airlines; 95–25 Conquest.
135.3	99–15 Blue Ridge; 2000–5 Blue Ridge.

135.5	94–3 Valley Air; 94–20 Conquest Helicopters; 95–25 Conquest; 95–27 Valley Air; 96–15 Valley Air.
135.25	92–10 Flight Unlimited; 94–3 Valley Air; 95–27 Valley Air; 96–15 Valley Air; 2000–3 Warbelow's.
135.63	94–40 Polynesian Airways; 95–17 Larry's Flying Service; 95–28 Atlantic; 96–4 South Aero; 99–7 Premier Jets.
135.87	90–21 Carroll.
135.95	95–17 Larry's Flying Service; 99–15 Blue Ridge; 2000–5 Blue Ridge.
135.179	97–11 Hampton; 2000–3 Warbelow's.
135.185	94–40 Polynesian Airways.
135.234	99–15 Blue Ridge.
135.243	99–11 Evergreen Helicopters; 99–15 Blue Ridge; 2000–5 Blue Ridge.
135.263	95–9 Charter Airlines; 96–4 South Aero.
135.267	95–8 Charter Airlines; 95–17 Larry's Flying Service; 96–4 South Aero.
135.293	95–17 Larry's Flying Service; 96–4 South Aero; 99–15 Blue Ridge; 2000–5 Blue Ridge.
135.299	99–15 Blue Ridge; 2000–5 Blue Ridge.
135.343	95–17 Larry's Flying Service; 99–15 Blue Ridge; 2000–5 Blue Ridge.
135.411	97–11 Hampton.
135.413	94–3 Valley Air; 96–15 Valley Air; 97–8 Pacific Av. d/b/a Inter-Island Helicopters; 97–16 Mauna Kea; 99–14 Alika Aviation.
135.421	93–36 Valley Air; 94–3 Valley Air; 96–15 Valley Air; 99–14 Alika Aviation.
135.437	94–3 Valley Air; 96–15 Valley Air.
141.101	98–18 General Aviation.
145.1	97–10 Alphin.
145.3	97–10 Alphin.
145.25	97–10 Alphin.
145.45	97–10 Alphin.
145.47	97–10 Alphin.
145.49	97–10 Alphin.
145.51	2000–1 Gatewood.
145.53	90–11 Thunderbird Accessories.
145.57	94–2 Woodhouse; 97–9 Alphin; 97–32 Florida Propeller.
145.61	90–11 Thunderbird Accessories.
191	90–12 & 90–19 Continental Airlines; 90–37 Northwest Airlines; 98–6 Continental Airlines; 99–12 TWA.
298.1	92–10 Flight Unlimited.
302.8	90–22 USAir.

49 CFR

1.47	92–76 Safety Equipment.
171 et seq	95–10 Diamond.
171.2	92–77 TCI; 94–28 Toyota; 94–31 Smalling: 95–16 Mulhall; 96–26 Midtown; 98–2 Carr.
171.8	92–77 TCI.
172.101	92–77 TCI; 94–28 Toyota; 94–31 Smalling; 96–26 Midtown.
172.200	92–77 TCI; 94–28 Toyota; 95–16 Mulhall; 96–26 Midtown, 98–2 Carr.
172.202	92–77 TCI; 94–28 Toyota; 94–31 Smalling; 95–16 Mulhall; 98–2 Carr.
172.203	94–28 Toyota.
172.204	92–77 TCI; 94–28 Toyota; 94–31 Smalling; 95–16 Mulhall; 98–2 Carr.
172.300	94–31 Smalling; 95–16 Mulhall, 96–26 Midtown; 98–2 Carr.
172.301	94–31 Smalling; 95–16 Mulhall; 98–2 Carr.
172.304	92–77 TCI; 94–31 Smalling; 95–16 Mulhall; 98–2 Carr.
172.400	92–77 TCI; 94–28 Toyota; 94–31 Smalling; 95–16 Mulhall; 98–2 Carr.
172.402	94–28 Toyota.
172.406	92–77 TCI.
173.1	92–77 TCI, 94–28 Toyota; 94–31 Smalling; 95–16 Mulhall; 98–2 Carr.
173.3	94–28 Toyota; 94–31 Smalling; 98–2 Carr.
173.6	94–28 Toyota.
173.22(a)	94–28 Toyota; 94–31 Smalling 98–2 Carr.
173.24	94–28 Toyota; 95–16 Mulhall.
173.25	94–28 Toyota.
173.27	92–77 TCI.
173.62	98–2 Carr.
173–115	92–77 TCI.
173.240	92–77 TCI.
173.243	94–28 Toyota.
173.260	94–28 Toyota.

173.266	94–28 Toyota; 94–31 Smalling.
175.25	94–31 Smalling.
191.5	97–13 Westair Commuter.
191.7	97–13 Westair Commuter.
821.30	92–73 Wyatt.
821.33	90–21 Carroll.

STATUTES

5 U.S.C.:	
504	90–17 Wilson; 91–17 & 92–71 KDS Aviation; 92–74, 93–2 & 93–9 Wendt; 93–29 Sweeney; 94–17 TCI; 95–27 Valley Air; 96–22 Woodhouse; 98–19 Martin & Jaworski.
552	90–12, 90–18 & 90–19 Continental Airlines; 93–10 Costello.
554	90–18 Continental Airlines; 90–21 Carroll; 95–12 Toyota.
556	90–21 Carroll; 91–54 Alaska Airlines.
557	90–20 Degenhardt; 90–21 Carroll; 90–37 Northwest Airlines; 94–28 Toyota.
705	95–14 Charter Airlines.
5332	95–27 Valley Air.
11 U.S.C.:	
362	91–2 Continental Airlines.
28 U.S.C.:	
2412	93–10 Costello; 96–22 Woodhouse.
2462	90–21 Carroll.
49 U.S.C.:	
5123	95–16 Mulhall; 96–26 & 97–1 Midtown Neon Sign; 98–2 Carr.
40102	96–17 Fenner.
41706	99–6 Squire.
44701	96–6 Ignatov; 96–17 Fenner; 99–12 TWA; 2000–3 Warbelow's.
44704	96–3 America West Airlines; 96–15 Valley Air.
46110	96–22 Woodhouse; 97–1 Midtown Neon Sign.
46301	97–1 Midtown Neon Sign; 97–16 Mauna Kea; 97–20 Werle; 99–15 Blue Ridge; 2000–3 Warbelow's.
46302	98–24 Stevens.
46303	97–7 Stalling.
49 U.S.C. App.:	
1301(31) (operate)	93–18 Westair Commuter.
(32) (person)	93–18 Westair Commuter.
1356	90–18 & 90–19, 91–2 Continental Airlines.
1357	90–18, 90–19 & 91–2 Continental Airlines; 91–41 [Airport Operator]; 91–58 [Airport Operator].
1421	92–10 Flight Unlimited; 92–48 USAir; 92–70 USAir; 93–9 Wendt.
1429	92–73 Wyatt.
1471	89–5 Schultz; 90–10 Webb; 90–20 Degenhardt; 90–12, 90–18 & 90–19 Continental Airlines; 90–23 Broyles; 90–26 & 90–43 Waddell; 90–33 Cato; 90–37 Northwest Airlines; 90–39 Hart; 91–2 Continental Airlines; 91–3 Lewis; 91–18 [Airport Operator]; 91–53 Koller; 92–5 Delta Air Lines; 92–10 Flight Unlimited; 92–46 Sutton-Sautter; 92–51 Koblick; 92–74 Wendt; 92–76 Safety Equipment; 94–20 Conquest Helicopters; 94–40 Polynesian Airways; 96–6 Ignatov; 97–7 Stalling.
1472	96–6 Ignatov.
1475	90–20 Degenhardt; 90–12 Continental Airlines; 90–18, 90–19 & 91–1 Continental Airlines; 91–3 Lewis; 91–18 [Airport Operator]; 94–40 Polynesian Airways.
1486	90–21 Carroll; 96–22 Woodhouse.
1809	92–77 TCI; 94–19 Pony Express; 94–28 Toyota; 94–31 Smalling; 95–12 Toyota.

Commercial Reporting Services of the Administrator's Civil Penalty Decisions and Orders

1. *Commercial Publications:* The Administrator's decisions and orders in civil penalty cases are available in the following commercial publications:

Civil Penalty Cases Digest Service, published by Hawkins Publishing Company, Inc., P.O. Box 480, Mayo, MD 21106, (410) 798–1677;

Federal Aviation Decisions, Clark Boardman Callaghan, a subsidiary of West Information Publishing Company, 50 Broad Street East, Rochester, NY 14694, 1–800–221–9428.

2. *CD-ROM.* The Administrator's orders and decisions are available on CD-ROM through Aeroflight Publications, P.O. Box 854, 433 Main Street, Gruver, TX 79040, (806) 733–2483.

3. *On-Line Services.* The Administrator's decisions and orders in civil penalty cases are available through the following on-line services:

- Westlaw (the Database ID is FTRAN-FAA).
- LEXIS [Transportation (TRANS) Library, FAA file.].
- Compuserve.
- FedWorld.

Docket

The FAA Hearing Docket is located at FAA Headquarters, 800 Independence Avenue, SW., Room 926A, Washington, DC 20591 (tel. no. 202–267–3641.) The clerk of the FAA Hearing Docket is Ms. Stephanie McClain. All documents that

are required to be filed in civil penalty proceedings must be filed with the FAA Hearing Docket Clerk at the FAA Hearing Docket. (See 14 CFR 13.210.) Materials contained in the dockets of any case not containing sensitive security information (protected by 14 CFR Part 191) may be viewed at the FAA Hearing Docket.

In addition, materials filed in the FAA Hearing Docket in non-security cases in which the complaints were filed on or after December 1, 1997, are available for inspection at the Department of Transportation Docket, located at 400 7th Street, SW., Room PL–401, Washington, DC 20590 (tel. no. 202–366–9329). While the originals will be retained in the FAA Hearing Docket, the DOT Docket will scan copies of documents in non-security cases in which the complaint was filed after December 1, 1997, into their computer database. Individuals who have access to the Internet can view the materials in these dockets using the following Internet address: http://dms.dot.gov.

FAA Offices

The Administrator's decisions and orders, indexes, and digests are available for public inspection and copying at the following location in FAA headquarters:

FAA Hearing Docket, Federal Aviation Administration, 800 Independence Avenue, SW., Room 926A, Washington, DC 20591; (202) 267–3641.

These materials are also available at all FAA regional and center legal offices at the following locations:

Office of the Regional Counsel for the Aeronautical Center (AMC–7), Mike Monroney Aeronautical Center, 6500 South MacArthur Blvd., Oklahoma City, OK 73169; (405) 954–3296.

Office of the Regional Counsel for the Alaskan Region (AAL–7), Alaskan Region Headquarters, 222 West 7th Avenue, Anchorage, AL 99513; (907) 271–5269.

Office of the Regional Counsel for the Central Region (ACE–7), Central Region Headquarters, 601 East 12th Street, Federal Building, Kansas City, MO 64106; (816) 426–5446.

Office of the Regional Counsel for the Eastern Region (AEA–7), 1 Aviation Plaza, 159–30 Rockaway Blvd., Springfield Gardens, NY 11434; (718) 553–3285.

Office of the Regional Counsel for the Great Lakes Region (AGL–7), Great Lakes Region Headquarters, O'Hare Lake Office Center, 2300 East Devon Avenue, Suite 419, Des Plaines, IL 60018; (847) 294–7085.

Office of the Regional Counsel for the New England Region (ANE–7), New England Region Headquarters, 12 New England Executive Park, Room 401, Burlington, MA 01803; (781) 238–7040.

Office of the Regional Counsel for the Northwest Mountain Region (ANM–7), Northwest Mountain Region Headquarters, 1601 Lind Avenue, SW, Renton, WA 98055; (425) 227–2007.

Office of the Regional Counsel for the Southern Region (ASO–7), Southern Region Headquarters, 1701 Columbia Avenue, College Park, GA 30337; (404) 305–5200.

Office of the Regional Counsel for the Southwest Region (ASW–7), Southwest Region Headquarters, 2601 Meacham Blvd., Fort Worth, TX 76137; (817) 222–5064.

Office of the Regional Counsel for the Technical Center (ACT–7), William J. Hughes Technical Center, Atlanta City International Airport, Atlantic City, NJ 08405; (609) 485–7088.

Office of the Regional Counsel for the Western-Pacific Region (AWP–7), Western-Pacific Region Headquarters, 15000 Aviation Boulevard, Hawthorne, CA 90261; (310) 725–7100.

Issued in Washington, DC on May 24th, 2000.

James S. Dillman,

Assistant Chief Counsel for Litigaiton.

[FR Doc. 00–14048 Filed 6–6–00; 8:45 am]

BILLING CODE 4910–13–M

DEPARTMENT OF TRANSPORTATION

Federal Aviation Administration

[Summary Notice No. PE–2000–20]

Petitions for Exemption; Summary of Petitions Received; Dispositions of Petitions Issued

AGENCY: Federal Aviation Administration (FAA), DOT.

ACTION: Notice of petitions for exemption received and of dispositions of prior petitions.

SUMMARY: Pursuant to FAA's rulemaking provisions governing the application, processing, and disposition of petitions for exemption (14 CFR Part 11), this notice contains a summary of certain petitions seeking relief from specified requirements of the Federal Aviation Regulations (14 CFR Chapter I), dispositions of certain petitions previously received, and corrections. The purpose of this notice is to improve the public's awareness of, and participation in, this aspect of FAA's regulatory activities. Neither publication of this notice nor the inclusion or omission of information in the summary is intended to affect the legal status of any petition or its final disposition.

DATES: Comments on petitions received must identify the petition docket number involved and must be received on or before June 27, 2000.

ADDRESSES: Send comments on any petition in triplicate to: Federal Aviation Administration, Office of the Chief Counsel, Attn: Rule Docket (AGC–200), Petition Docket No. _____, 800 Independence Avenue, SW., Washington, D.C. 20591.

Comments may also be sent electronically to the following internet address: 9–NPRM–cmts@faa.gov.

The petition, any comments received, and a copy of any final disposition are filed in the assigned regulatory docket and are available for examination in the Rules Docket (AGC–200), Room 915G, FAA Headquarters Building (FOB 10A), 800 Independence Avenue, SW., Washington, DC 20591; telephone (202) 267–3132.

FOR FURTHER INFORMATION CONTACT: Cherie Jack (202) 267–7271, Forest Rawls (202) 267–8033, or Vanessa Wilkins (202) 267–8029 Office of Rulemaking (ARM–1), Federal Aviation Administration, 800 Independence Avenue, SW., Washington, DC 20591.

This notice is published pursuant to paragraphs (c), (e), and (g) of § 11.27 of Part 11 of the Federal Aviation Regulations (14 CFR Part 11).

Issued in Washington, DC, on June 1, 2000.

Donald P. Byrne,

Assistant Chief Counsel for Regulations.

Petitions for Exemption

Docket No.: 30010.

Petitioner: Avcon Industries, Inc.

Section of the FAR Affected: 14 CFR 25.857(e)(4).

Description of Relief Sought: To certify Learjet Model 20 and 30 series airplanes, to be modified for the carriage of cargo as Class E compartments (an STC project), without meeting the requirements to exclude hazardous quantities of smoke, flames or noxious gases from the flightcrew compartment.

Docket No.: 30022.

Petitioner: Midway Airlines.

Section of the FAR Affected: 14 CFR 25.858 and 121.314(c).

Description of Relief Sought: To allow operation, until June 30, 2001, of two Fokker Model F28–0100 airplanes beyond the cargo compartment modification deadline of March 19, 2001.

Docket No.: 30023.

Petitioner: Lufthansa Technik.

Section of the FAR Affected: 14 CFR 25.562, 25.785(b), 25.785(h)(2), 25.785(j), 25.183(e), and 25.853(d).

Description of Relief Sought: To permit an executive interior to be installed for ''private, not-for-hire'' use on a Boeing Model 777–200 airplane.

Docket No.: 30052.

Petitioner: Airbus Industrie.

Section of the FAR Affected: 14 CFR 21.183(f), 25.2(b), 25.807(f)(4), and 121.310(m).

Description of Relief Sought: To permit a distance between exit door pairs 2 and 3 in excess of 60 feet for the A340–600 airplane.

[FR Doc. 00–14157 Filed 6–5–00; 8:45 am]

BILLING CODE 4910–13–M

DEPARTMENT OF TRANSPORTATION

Federal Aviation Administration

[Summary Notice No. PE–2000–21]

Petitions for Exemption; Summary of Petitions Received; Dispositions of Petitions Issued

AGENCY: Federal Aviation Administration (FAA), DOT.

ACTION: Notice of petitions for exemption received and of dispositions of prior petitions.

SUMMARY: Pursuant to FAA's rulemaking provisions governing the application, processing, and disposition of petitions for exemption (14 CFR Part 11), this notice contains a summary of certain petitions seeking relief from specified requirements of the Federal Aviation Regulations (14 CFR Chapter I), dispositions of certain petitions previously received, and corrections. The purpose of this notice is to improve the public's awareness of, and participation in, this aspect of FAA's regulatory activities. Neither publication of this notice nor the inclusion or omission of information in the summary is intended to affect the legal status of any petition or its final disposition.

DATES: Comments on petitions received must identify the petition docket number involved and must be received on or before June 27, 2000.

ADDRESSES: Send comments on any application in triplicate to: Federal Aviation Administration, Office of the Chief Counsel, Attn: Rule Docket (AGC–200), Petition Docket No. _____, 800 Independence Avenue, SW., Washington, D.C. 20591.

Comments may also be sent electronically to the following internet address: 9–NPRM–cmts@faa.gov.

The petition, any comments received, and a copy of any final disposition are filed in the assigned regulatory docket and are available for examination in the Rules Docket (AGC–200), Room 915G, FAA Headquarters Building (FOB 10A), 800 Independence Avenue, SW., Washington, D.C. 20591; telephone (202) 267–3132.

FOR FURTHER INFORMATION CONTACT: Cherie Jack (202) 267–7271, Forest Rawls (202) 267–8033, or Vanessa Wilkins (202) 267–8029 Office of Rulemaking (ARM–1), Federal Aviation Administration, 800 Independence Avenue, SW., Washington, DC 20591.

This notice is published pursuant to paragraphs (c), (e), and (g) of § 11.27 of Part 11 of the Federal Aviation Regulations (14 CFR Part 11).

Issued in Washington, DC, on June 1, 2000.

Donald P. Byrne,

Assistant Chief Counsel for Regulations.

Petitions for Exemption

Docket No.: 29974.

Petitioner: Mr. Joseph E. Fisher.

Section of the FAR Affected: 14 CFR 121.574 and 135.91.

Description of Relief Sought: To permit the operator of an aircraft on which Mr. Fisher is traveling to allow Mr. Fisher to furnish, carry, and operate onboard its aircraft certain oxygen storage, generating, and dispensing equipment for Mr. Fisher's medical use while being carried as a passenger.

Docket No.: 30023.

Petitioner: Lufthansa Technik.

Section of the FAR Affected: 14 CFR 25.562, 25.785(b), 25.785(h)(2), 25.785(j), 25.813(e), and 25.853(d).

Description of Relief Sought: To allow an executive interior to be installed for ''private, not-for-hire'' use on a Boeing Model 777–200 airplane.

Dispositions of Petitions

Docket No.: 29459.

Petitioner: Laurel Oaks Career Development Campus.

Section of the FAR Affected: 14 CFR 65.17(a), 65.19(b), and 65.75(a) and (b).

Description of Relief Sought/ Disposition: To permit Laurel Oaks CDC to (1) administer the FAA oral and practical mechanic tests to students at times and places identified in Laurel Oaks CDC's FAA-approved AMT Policies, Procedures, and Curriculum handbook; (2) Conduct oral and practical mechanic tests as an integral part of the education process rather than upon students' successful completion of the mechanic written tests; (3) Approve students for retesting within 30 days after failure without requiring a signed statement certifying that additional instruction has been given in the failed area; and (4) Administer the FAA AMG written knowledge test to students immediately following successful completion of the general curriculum, before meeting the experience requirements of § 65.77. *Partial Grant, 03/10/2000, Exemption No. 7154.*

Docket No.: 29505.

Petitioner: Rough & Ready Guide Service, Inc. dba Nordic Flying Service.

Section of the FAR Affected: 14 CFR 43.3(a) and (g), and paragraph (c) of appendix A to part 43.

Description of Relief Sought/ Disposition: To permit pilots employed by NFS to perform the preventative maintenance functions listed in paragraph (c) of appendix A to part 43 on an aircraft operated under 14 CFR part 135 without those pilots holding a mechanic certificate. *Denial, 02/25/ 2000, Exemption No. 7129.*

Docket No.: 29943.

Petitioner: Duncan Aviation, Inc.

Section of the FAR Affected: 14 CFR 145.45(f).

Description of Relief Sought/ Disposition: To permit Duncan Aviation to place copies of its Inspection Procedures Manual (IPM) in strategic locations in its repair stations rather than giving a copy of its IPM to each of its supervisory and inspection personnel. *Grant, 03/21/2000, Exemption No. 7159.*

Docket No.: 27122.

Petitioner: Air Tractor, Inc.

Section of the FAR Affected: 14 CFR 61.31(a)(1).

Description of Relief Sought/ Disposition: To permit Air Tractor and pilots of Air Tractor AT–802 and AT–802A airplanes to operate those airplanes without holding a type rating, although the maximum gross weight of the airplanes exceeds 12,500 pounds. *Grant, 03/21/2000, Exemption No. 5651F.*

Docket No.: 23290.

Petitioner: Air Transport Association of America.

Section of the FAR Affected: 14 CFR 121.311(f) and 121.391(d).

Description of Relief Sought/ Disposition: To permit ATA member airlines and other similarly situated certificate holders operating under part 121 to continue to locate required flight attendants at the mid-cabin flight attendant station during takeoff and landing on Boeing 767 airplanes. *Grant, 03/29/2000, Exemption No. 4298H.*

Docket No.: 29732.

Petitioner: IHC Health Services, Inc. dba IHC Life Flight.

Section of the FAR Affected: 14 CFR 133.45(e)(1).

Description of Relief Sought/ Disposition: To permit IHC to conduct Class D rotorcraft-load combination

rescue operations with an A109K–2 helicopter certificated in the normal category under 4 CFR part 27, subject to certain conditions and limitations. *Grant, 02/07/2000, Exemption No. 7118.*

Docket No.: 29949.

Petitioner: Air Transport International, L.L.C.

Section of the FAR Affected: 14 CFR 121.310(d)(4).

Description of Relief Sought/ Disposition: To permit ATI to operate its DC–8 airplanes in passenger-carrying operations without a cockpit control device for each emergency light, subject to certain conditions and limitations. *Grant, 03/29/2000, Exemption No. 7156.*

Docket No.: 28945.

Petitioner: Air Transport International, L.L.C.

Section of the FAR Affected: 14 CFR 121.433(c)(1)(iii), 121.441(a)(1), 121.441(b)(1), and appendix F to part 121.

Description of Relief Sought/ Disposition: To permit ATI to continue to combine recurrent flight and ground training and proficiency checks for ATI's flight crewmembers into a single annual training and proficiency evaluation program. *Grant, 02/11/2000, Exemption No. 6728A.*

Docket No.: 29916.

Petitioner: Rhodes Aviation, Inc.

Section of the FAR Affected: 14 CFR 135.143(c)(2).

Description of Relief Sought/ Disposition: To permit RAI to operate certain aircraft under part 135 without a TSO–C112 (Mode S) transponder installed in the aircraft. *Grant, 03/17/ 2000, Exemption No. 7151.*

Docket No.: 29901.

Petitioner: Segrave Aviation, Inc.

Section of the FAR Affected: 14 CFR 135.143(c)(2).

Description of Relief Sought/ Disposition: To permit Segrave Aviation to operate certain aircraft under part 135 without a TSO–C112 (Mode S) transponder installed in the aircraft. *Grant, 03/17/2000, Exemption No. 7150.*

Docket No.: 29847.

Petitioner: Midwest Aviation Services, Inc.

Section of the FAR Affected: 14 CFR 135.143(c)(2).

Description of Relief Sought/ Disposition: To permit MASI to operate certain aircraft under part 135 without a TSO–C112 (Mode S) transponder installed in the aircraft. *Grant, 03/17/ 2000, Exemption No. 7149.*

Docket No.: 29917.

Petitioner: Helicopters, Inc.

Section of the FAR Affected: 14 CFR 135.143(c)(2).

Description of Relief Sought/ Disposition: To permit HCI to operate certain aircraft under part 135 without a TSO–C112 (Mode S) transponder installed in the aircraft. *Grant, 03/14/ 2000, Exemption No. 7148.*

Docket No.: 28159.

Petitioner: Grand Canyon Airlines, Inc.

Section of the FAR Affected: 14 CFR 121.345(c)(2) and 135.143(c)(2).

Description of Relief Sought/ Disposition: To permit GCA to continue to operate certain aircraft under part 121 or part 135 without a TSO–C112 (Mode S) transponder installed in the aircraft. *Grant, 03/30/2000, Exemption No. 6101B.*

Docket No.: 25336.

Petitioner: United Airlines, Inc.

Section of the FAR Affected: 14 CFR 121.697(a)(3), (b), (c), and (d), and 121.709(b)(3).

Description of Relief Sought/ Disposition: To permit United to continue to use computerized signatures to satisfy the airworthiness release signature requirements of part 121 in lieu of physical signatures. *Grant, 03/ 31/2000, Exemption No. 5121F.*

Docket No.: 19634.

Petitioner: Boeing Commercial Airplanes Group.

Section of the FAR Affected: 14 CFR 121.310(d)(4).

Description of Relief Sought/ Disposition: To permit operators of McDonnell Douglas DC–8 aircraft to continue to operate those aircraft in passenger-carrying operations without a cockpit control device for each emergency light. *Denial, 04/03/2000, Exemption No. 3055K.*

[FR Doc. 00–14158 Filed 6–5–00; 8:45 am]

BILLING CODE 4910–13–M0

DEPARTMENT OF TRANSPORTATION

Federal Aviation Administration

Notice of Intent To Rule on Application To Use the Revenue From a Passenger Facility Charge (PFC) at Kalamazoo/ Battle Creek International Airport, Kalamazoo, Michigan

AGENCY: Federal Aviation Administration (FAA), DOT.

ACTION: Notice of Intent to Rule on Application.

SUMMARY: The FAA proposes to rule and invites public comment on the application to use the revenue from a PFC at Kalamazoo/Battle Creek International Airport under the provisions of the Aviation Safety and Capacity Expansion Act of 1990 (Title IX of the Omnibus Budget Reconciliation Act of 1990) (Pub. L. 101–508) and Part 158 of the Federal Aviation Regulations (14 CFR Part 158).

DATES: Comments must be received on or before July 6, 2000.

ADDRESSES: Comments on this application may be mailed or delivered in triplicate to the FAA at the following address: Federal Aviation Administration, Detroit Airports District Office, Willow Run Airport, East, 8820 Beck Road Belleville, Michigan 48111.

In addition, one copy of any comments submitted to the FAA must be mailed or delivered to Mr. Kenneth Potts, Airport Director of the Kalamazoo/Battle Creek International Airport at the following address: Kalamazoo/Battle Creek International Airport, 5235 Portage Road, Kalamazoo, Michigan 49002.

Air carriers and foreign air carriers may submit copies of written comments previously provided to the Kalamazoo/ Battle Creek International Airport under section 158.23 of Part 158.

FOR FURTHER INFORMATION CONTACT: Mr. Gary J. Migut, Program Manager, Federal Aviation Administration, Detroit Airports District Office, Willow Run Airport, East, 8820 Beck Road, Belleville, Michigan 48111 (734–487–7278). The application may be reviewed in person at this same location.

SUPPLEMENTARY INFORMATION: The FAA proposes to rule and invites public comment on the application to use the revenue from a PFC at Kalamazoo/Battle Creek International Airport under the provisions of the Aviation Safety and Capacity Expansion Act of 1990 (Title IX of the Omnibus Budget Reconciliation Act of 1990) (Public Law 101–508) and Part 158 of the Federal Aviation Regulations (14 CFR Part 158).

On May 11, 2000, the FAA determined that the application to use the revenue from a PFC submitted by Kalamazoo/Battle Creek International Airport was substantially complete within the requirements of section 158.25 of Part 158. The FAA will approve or disapprove the application, in whole or in part, no later than July 29, 2000.

The following is a brief overview of the application.

PFC Application No.: 00–02–U–OO–AZO.

Level of the PFC: $3.00.

Actual charge effective date: April 1, 1997.

Estimated charge expiration date: December 1, 2001.

Total approved net PFC revenue: $3,276,183.00.

Brief description of proposed projects: Rehabilitate Taxiway B (South), Glycol

Capture System, Rehabilitate Taxiway D, Construct Perimeter Road, Rehabilitate Taxiway A, Rehabilitate Taxiway E.

Class or classes of air carriers which the public agency has requested not be required to collect PFCs: non-scheduled Part 135 Air Taxis/Commercial Operators.

Any person may inspect the application in person at the FAA office listed above **FOR FURTHER INFORMATION CONTACT.**

In addition, any person may, upon request, inspect the application, notice, and other documents germane to the application in person at the Kalamazoo/Battle Creek International Airport.

Issued in Des Plaines, Illinois, on May 23, 2000.

Benito De Leon,

Manager, Planning/Programming Branch, Airports Division, Great Lakes Region.

[FR Doc. 00–14159 Filed 6–5–00; 8:45 am]

BILLING CODE 4910–13–M

DEPARTMENT OF TRANSPORTATION

Federal Railroad Administration

Petition for Waiver of Compliance

In accordance with part 211 of title 49 Code of Federal Regulations (CFR), notice is hereby given that the Federal Railroad Administration (FRA) received a request for a waiver of compliance with a provision of the Federal hours of service laws (108 Stat. 888, Pub. L. 103–272, 49 U.S.C. 21106). The Federal hours of service laws currently make it unlawful for a railroad to construct or reconstruct sleeping quarters for certain employees if the sleeping quarters are in an area or in the immediate vicinity of an area as determined under regulations prescribed by the Secretary of Transportation in which railroad switching or humping operations are performed. See 49 U.S.C. 21101 and 21106. Title 49 CFR part 228, subpart C, defines FRA's distance requirements for construction, reconstruction, and/or acquisition of sleeping quarters.

Burlington Northern Santa Fe Railway Company (BNSF)

[Waiver Petition Docket No. FRA–1999–5107]

BNSF petitions for approval to utilize a facility to be constructed, owned, and operated by a third party which will be located within one-half mile of railroad switching operations at Thayer, Missouri. See 49 CFR 228.103. BNSF states that the planned structure will be a commercial lodging facility that is open to the general public. BNSF proposes to enter into a lodging contract with the new facility owner to guarantee room availability for its train and engine crews operating in and out of Thayer. Crews are presently housed at a motel in White Plains, Missouri, approximately 27 miles from Thayer. The petitioner indicates that granting the exemption will not adversely affect safety.

Interested parties are invited to participate in these proceedings by submitting written views, data, or comments. FRA does not anticipate scheduling a public hearing in connection with these proceedings since the facts do not appear to warrant a hearing. If any interested party desires an opportunity for oral comment, they should notify FRA, in writing, before the end of the comment period and specify the basis for their request.

All communications concerning these proceedings should identify the appropriate docket number (e.g., Waiver Petition Docket Number 1999–5107) and must be submitted to the Docket Clerk, DOT Docket Management Facility, Room PL–401 (Plaza Level), 400 7th Street, SW., Washington, DC 20590. Communications received within 30 days of the date of this notice will be considered by FRA before final action is taken. Comments received after that date will be considered as far as practicable. All written communications concerning these proceedings are available for examination during regular business hours (9:00 a.m.–5:00 p.m.) at the above facility. All documents in the public docket are also available for inspection and copying on the Internet at the docket facility's web site at *http://dms.dot.gov.*

Issued in Washington, D.C. on May 25, 2000.

Grady C. Cothen, Jr.,

Deputy Associate Administrator for Safety Standards and Program Development.

[FR Doc. 00–14049 Filed 6–5–00; 8:45 am]

BILLING CODE 4910–06–P

DEPARTMENT OF TRANSPORTATION

Federal Railroad Administration

Petition for Waiver of Compliance

In accordance with Part 211 of Title 49, Code of Federal Regulations (CFR), notice is hereby given that the Federal Railroad Administration (FRA) received a request for a waiver of compliance with certain requirements of its safety standards. The individual petition is described below, including the party seeking relief, the regulatory provisions involved, the nature of the relief being requested, and the petitioner's arguments in favor of relief.

Durbin & Greenbrier Valley Railroad, Inc.

[Waiver Petition Docket Number FRA–2000–7001]

Durbin & Greenbrier Valley Railroad, Inc. (DGVR) seeks a permanent waiver of compliance from certain provisions of the Safety Glazing Standards, 49 CFR 223.9, which requires certified glazing, for one locomotive (self propelled railway motor cars) utilized in excursion service on DGVR in Durbin, West Virginia. DGVR indicates that they would provide front and rear facing windows with FRA Type I glazing, but would like to equip the side facing windows with safety glazing. They state that the motor cars are not air conditioned, and the passenger compartment side windows can be opened.

Interested parties are invited to participate in these proceedings by submitting written views, data, or comments. FRA does not anticipate scheduling a public hearing in connection with these proceedings since the facts do not appear to warrant a hearing. If any interested party desires an opportunity for oral comment, they should notify FRA, in writing, before the end of the comment period and specify the basis for their request.

All communications concerning these proceedings should identify the appropriate docket number (*e.g.,* Waiver Petition Docket Number 2000–7001) and must be submitted to the Docket Clerk, DOT Docket Management Facility, Room PL–401 (Plaza Level), 400 7th Street, SW., Washington, DC 20590. Communications received within 30 days of the date of this notice will be considered by FRA before final action is taken. Comments received after that date will be considered as far as practicable. All written communications concerning these proceedings are available for examination during regular business hours (9 a.m.–5 p.m.) at the above facility. All documents in the public docket are also available for inspection and copying on the Internet at the docket facility's web site at *http://dms.dot.gov.*

Issued in Washington, DC on May 25, 2000.

Grady C. Cothen, Jr.,

Deputy Associate Administrator for Safety Standards and Program Development.

[FR Doc. 00–14058 Filed 6–5–00; 8:45 am]

BILLING CODE 4910–06–P

DEPARTMENT OF TRANSPORTATION

Federal Railroad Administration

Petition for Waiver of Compliance

In accordance with Part 211 of Title 49, Code of Federal Regulations (CFR), notice is hereby given that the Federal Railroad Administration (FRA) received a request for a waiver of compliance with provisions of the Hours of Service Law (108 Stat. 888, Pub. L. 103–272, 49 U.S.C. 21102(b)). The Hours of Service Law currently makes it unlawful for a railroad to require specified employees to remain on duty in excess of 12 hours. However, the Hours of Service Law contains a provision permitting a railroad, which employs not more than 15 employees subject to the statute, to seek an exemption from the 12 hour limitation.

Kankakee, Beaverville and Southern Railroad (KBS)

[Waiver Petition Docket No. FRA–2000–7254]

KBS seeks a continuance of a previous exemption which permitted KBS train crew employees to remain on duty not more than 16 hours in any 24-hour period during unusual circumstances. KBS stated that it is not its intention to employ a train crew over 12 hours per day under normal circumstances, but this exemption, if continued, would help its operation if other unusual operating conditions are encountered. KBS provides service on 144 miles of trackage between Iroquois and Kankakee, Illinois; Iroquois and Danville, Illinois; and Iroquois and Lafayette, Indiana.

The petitioner indicates that granting the exemption is in the public interest and will not adversely affect safety. Additionally, the petitioner asserts it employs not more than 15 employees that are subject to the statute and has demonstrated good cause for granting this exemption.

Interested parties are invited to participate in these proceedings by submitting written views, data, or comments. FRA does not anticipate scheduling a public hearing in connection with these proceedings since the facts do not appear to warrant a hearing. If any interested party desires an opportunity for oral comment, they should notify FRA, in writing, before the end of the comment period and specify the basis for their request.

All communications concerning these proceedings should identify the appropriate docket number (*e.g.,* Waiver Petition Docket Number 2000–7254) and must be submitted to the Docket Clerk, DOT Docket Management Facility, Room PL–401 (Plaza Level), 400 7th Street, SW., Washington, DC 20590. Communications received within 45 days of the date of this notice will be considered by FRA before final action is taken. Comments received after that date will be considered as far as practicable. All written communications concerning these proceedings are available for examination during regular business hours (9 a.m.–5 p.m.) at the above facility. All documents in the public docket are also available for inspection and copying on the Internet at the docket facility's web site at *http://dms.dot.gov.*

Issued in Washington, DC on May 25, 2000.

Grady C. Cothen, Jr.,

Deputy Associate Administrator for Safety Standards and Program Development.

[FR Doc. 00–14062 Filed 6–5–00; 8:45 am]

BILLING CODE 4910–06–P

DEPARTMENT OF TRANSPORTATION

Federal Railroad Administration

Petition for Waiver of Compliance

In accordance with Part 211 of Title 49, Code of Federal Regulations (CFR), notice is hereby given that the Federal Railroad Administration (FRA) received a request for a waiver of compliance with certain requirements of its safety standards. The individual petition is described below, including the party seeking relief, the regulatory provisions involved, the nature of the relief being requested, and the petitioner's arguments in favor of relief.

Ouachita Railroad (Waiver Petition Docket Number FRA–2000–7253)

The Ouachita Railroad seeks to add two locomotives to a permanent waiver of compliance, docket RSGM–92–13, with the Safety Glazing Standards, 49 CFR part 223, which requires certified glazing in all locomotive windows, except those locomotives used in yard service. The Ouachita Railroad seeks this waiver for locomotives OUCH 1151 and OUCH 1159. The original waiver (RSGM–92–13) was approved October 29, 1992, and is in effect for three locomotives.

Interested parties are invited to participate in these proceedings by submitting written views, data, or comments. FRA does not anticipate scheduling a public hearing in connection with these proceedings since the facts do not appear to warrant a hearing. If any interested party desires an opportunity for oral comment, they should notify FRA, in writing, before the end of the comment period and specify the basis for their request.

All communications concerning these proceedings should identify the appropriate docket number (e.g., Waiver Petition Docket Number 2000–7253) and must be submitted to the Docket Clerk, DOT Docket Management Facility, Room PL–401 (Plaza Level), 400 7th Street, SW, Washington, DC 20590. Communications received within 30 days of the date of this notice will be considered by FRA before final action is taken. Comments received after that date will be considered as far as practicable. All written communications concerning these proceedings are available for examination during regular business hours (9 a.m.–5 p.m.) at the above facility. All documents in the public docket are also available for inspection and copying on the Internet at the docket facility's web site at *http://dms.dot.gov.*

Issued in Washington, DC, on May 25, 2000.

Grady C. Cothen, Jr.,

Deputy Associate Administrator for Safety Standards and Program Development.

[FR Doc. 00–14061 Filed 6–5–00; 8:45 am]

BILLING CODE 4910–06–P

DEPARTMENT OF TRANSPORTATION

Federal Railroad Administration

Petition for Waiver of Compliance

In accordance with Part 211 of Title 49 Code of Federal Regulations (CFR), notice is hereby given that the Federal Railroad Administration (FRA) received a request for a waiver of compliance with certain requirements of its safety standards. The individual petition is described below, including the party seeking relief, the regulatory provisions involved, the nature of the relief being requested, and the petitioner's arguments in favor of relief.

Peninsula Terminal Company; (Waiver Petition Docket Number FRA–2000–7269)

The Peninsula Terminal Company seeks a permanent waiver of compliance from the requirements of the Safety Glazing Standards, 49 CFR Part 223, which requires certified glazing in all locomotive windows, except those locomotives used in yard service, for one locomotive. The railroad indicates that the locomotive, number LPN 130, is an Electro Motive Division SW–15 switch engine equipped with laminated glazing in all windows. The locomotive is utilized in the Portland, Oregon, area

providing switching service between North Force Avenue on the east to Suttle Road on the west, a distance of 1 mile, and ¼ mile south to an interchange point with the Burlington Northern Santa Fe and Union Pacific Railroads.

Interested parties are invited to participate in these proceedings by submitting written views, data, or comments. FRA does not anticipate scheduling a public hearing in connection with these proceedings since the facts do not appear to warrant a hearing. If any interested party desires an opportunity for oral comment, they should notify FRA, in writing, before the end of the comment period and specify the basis for their request.

All communications concerning these proceedings should identify the appropriate docket number (*e.g.,* Waiver Petition Docket Number 2000–7269) and must be submitted to the Docket Clerk, DOT Docket Management Facility, Room PL–401 (Plaza Level), 400 7th Street, SW, Washington, DC 20590. Communications received within 30 days of the date of this notice will be considered by FRA before final action is taken. Comments received after that date will be considered as far as practicable. All written communications concerning these proceedings are available for examination during regular business hours (9 a.m.–5 p.m.) at the above facility. All documents in the public docket are also available for inspection and copying on the Internet at the docket facility's web site at *http://dms.dot.gov.*

Issued in Washington, DC on May 25, 2000.

Grady C. Cothen, Jr.,

Deputy Associate Administrator for Safety Standards and Program Development.

[FR Doc. 00–14064 Filed 6–5–00; 8:45 am]

BILLING CODE 4910–06–P

DEPARTMENT OF TRANSPORTATION

Federal Railroad Administration

Petition for Waiver of Compliance

In accordance with Part 211 of Title 49 Code of Federal Regulations (CFR), notice is hereby given that the Federal Railroad Administration (FRA) received a request for a waiver of compliance with certain requirements of its safety standards. The individual petition is described below, including the party seeking relief, the regulatory provisions involved, the nature of the relief being requested, and the petitioner's arguments in favor of relief.

Relco Locomotives, Inc.; (Waiver Petition Docket Number FRA–2000–7256)

Relco Locomotives, Inc., submitted a request on behalf of Aimcor, Inc., seeking a permanent waiver of compliance from certain provisions of the Safety Glazing Standards, 49 CFR 223.9, which requires certified glazing, for two locomotives utilized in switching service in Port Arthur, Texas. The locomotives are identified as RE 1267 and RE 1270. Relco indicates that both locomotives are used for switching within Aimcor's facility located at the north end of Houston Avenue in Port Arthur. The locomotives also operate over a Union Pacific Railroad (UP) industrial track within the port facility. The industrial track is used by Aimcor, Rail Serve, and UP for movements between different areas of the port.

Interested parties are invited to participate in these proceedings by submitting written views, data, or comments. FRA does not anticipate scheduling a public hearing in connection with these proceedings since the facts do not appear to warrant a hearing. If any interested party desires an opportunity for oral comment, they should notify FRA, in writing, before the end of the comment period and specify the basis for their request.

All communications concerning these proceedings should identify the appropriate docket number (*e.g.,* Waiver Petition Docket Number 2000–7256) and must be submitted to the Docket Clerk, DOT Docket Management Facility, Room PL–401 (Plaza Level), 400 7th Street, SW, Washington, DC 20590. Communications received within 30 days of the date of this notice will be considered by FRA before final action is taken. Comments received after that date will be considered as far as practicable. All written communications concerning these proceedings are available for examination during regular business hours (9 a.m.–5 p.m.) at the above facility. All documents in the public docket are also available for inspection and copying on the Internet at the docket facility's web site at *http://dms.dot.gov.*

Issued in Washington, DC on May 25, 2000.

Grady C. Cothen, Jr.,

Deputy Associate Administrator for Safety Standards and Program Development.

[FR Doc. 00–14063 Filed 6–5–00; 8:45 am]

BILLING CODE 4910–06–P

DEPARTMENT OF TRANSPORTATION

Federal Railroad Administration

Notice of Application for Approval of Discontinuance or Modification of a Railroad Signal System or Relief From the Requirements of Title 49 Code of Federal Regulations Part 236

Pursuant to Title 49 Code of Federal Regulations (CFR) Part 235 and 49 U.S.C. 20502(a), the following railroads have petitioned the Federal Railroad Administration (FRA) seeking approval for the discontinuance or modification of the signal system or relief from the requirements of 49 CFR Part 236 as detailed below.

[Docket No. FRA–2000–7037]

Applicant: Burlington Northern and Santa Fe Railway, Mr. William G. Peterson, Director Signal Engineering, 4515 Kansas Avenue, Kansas City, Kansas 66106.

Burlington Northern and Santa Fe Railway seeks approval of the proposed modification of the traffic control system, on the single main track, between Clontarf, Minnesota, milepost 138.5 and Tintah, Minnesota, milepost 192.7, on Dakota Division, Morris Subdivision, consisting of the following:

1. Conversion of the power-operated switch to hand operation, and discontinuance and removal of associated controlled signals 53LA, 53LB, and 53R, at West Clontarf, near milepost 138.5;
2. Conversion of the power-operated switch to hand operation, equipped with an electric lock, and discontinuance and removal of associated controlled signals 39RA, 39RB, and 39L, at East End Herman, near milepost 176.2; and
3. Conversion of the power-operated switch to hand operation, and discontinuance and removal of associated controlled signals 31RA, 31RB, and 31L, at East End Tintah, near milepost 192.7.

The reasons given for the proposed changes are that the siding switches at East Clontarf and West Tintah, were removed in the late 70's; the West End of Herman was converted to hand operation, equipped with an electric lock, when the siding was converted to a Unit Grain Facility, and the switch relocated; and the proposed changes are in conjunction with a pole line elimination project.

Any interested party desiring to protest the granting of an application shall set forth specifically the grounds upon which the protest is made, and contain a concise statement of the interest of the protestant in the

proceeding. Additionally, one copy of the protest shall be furnished to the applicant at the address listed above.

All communications concerning this proceeding should be identified by the docket number and must be submitted to the Docket Clerk, DOT Central Docket Management Facility, Room PI–401, Washington, DC 20590–0001. Communications received within 45 days of the date of this notice will be considered by the FRA before final action is taken. Comments received after that date will be considered as far as practicable. All written communications concerning these proceedings are available for examination during regular business hours (9 a.m.–5 p.m.) at DOT Central Docket Management Facility, Room PI–401 (Plaza Level), 400 Seventh Street, SW., Washington, DC 20590–0001. All documents in the public docket are also available for inspection and copying on the Internet at the docket facility's Web site at *http://dms.dot.gov.*

FRA expects to be able to determine these matters without an oral hearing. However, if a specific request for an oral hearing is accompanied by a showing that the party is unable to adequately present his or her position by written statements, an application may be set for public hearing.

Issued in Washington, DC on May 25, 2000.

Grady C. Cothen, Jr.,

Deputy Associate Administrator for Safety Standards and Program Development.

[FR Doc. 00–14059 Filed 6–5–00; 8:45 am]

BILLING CODE 4910–06–P

DEPARTMENT OF TRANSPORTATION

Federal Railroad Administration

Notice of Application for Approval of Discontinuance or Modification of a Railroad Signal System or Relief from the Requirements of Title 49 Code of Federal Regulations Part 236

Pursuant to Title 49 Code of Federal Regulations (CFR) Part 235 and 49 U.S.C. 20502(a), the following railroads have petitioned the Federal Railroad Administration (FRA) seeking approval for the discontinuance or modification of the signal system or relief from the requirements of 49 CFR Part 236 as detailed below.

Docket No. FRA–2000–7038

Applicant: Burlington Northern and Santa Fe Railway, Mr. William G. Peterson, Director Signal Engineering, 4515 Kansas Avenue, Kansas City, Kansas 66106.

Burlington Northern and Santa Fe Railway seeks approval of the proposed modification of the traffic control system, on the single main track, at the West End of Richland, Missouri, milepost 159.6, on Springfield Division, Cuba Subdivision, consisting of the conversion of the power-operated switch to hand operation, equipped with and electric lock, and discontinuance and removal of associated controlled signals 42L, 42RA, and 42RB.

The reason given for the proposed changes is that in conjunction with a pole line elimination project, changing the track designation from a siding to storage track, and the East End of Richland being changed to electric lock.

Any interested party desiring to protest the granting of an application shall set forth specifically the grounds upon which the protest is made, and contain a concise statement of the interest of the Protestant in the proceeding. Additionally, one copy of the protest shall be furnished to the applicant at the address listed above.

All communications concerning this proceeding should be identified by the docket number and must be submitted to the Docket Clerk, DOT Central Docket Management Facility, Room PI–401, Washington, D.C. 20590–0001. Communications received within 45 days of the date of this notice will be considered by the FRA before final action is taken. Comments received after that date will be considered as far as practicable. All written communications concerning these proceedings are available for examination during regular business hours (9 a.m.—5 p.m.) at DOT Central Docket Management Facility, Room PI–401 (Plaza Level), 400 Seventh Street, SW, Washington, DC 20590–0001. All documents in the public docket are also available for inspection and copying on the Internet at the docket facility's Web site at *http://dms.dot.gov.*

FRA expects to be able to determine these matters without an oral hearing. However, if a specific request for an oral hearing is accompanied by a showing that the party is unable to adequately present his or her position by written statements, an application may be set for public hearing.

Issued in Washington, D.C. on May 25, 2000.

Grady C. Cothen, Jr.,

Deputy Associate Administrator for Safety Standards and Program Development.

[FR Doc. 00–14060 Filed 6–5–00; 8:45 am]

BILLING CODE 4910–06–P

DEPARTMENT OF TRANSPORTATION

Federal Railroad Administration

Notice of Application for Approval of Discontinuance or Modification of a Railroad Signal System or Relief From the Requirements of Title 49 Code of Federal Regulations Part 236

Pursuant to Title 49 Code of Federal Regulations (CFR) part 235 and 49 U.S.C. 20502(a), the following railroads have petitioned the Federal Railroad Administration (FRA) seeking approval for the discontinuance or modification of the signal system or relief from the requirements of 49 CFR part 236 as detailed below.

Docket No. FRA–2000–6890

Applicant: Colorado Department of Transportation, Mr. Randy Grauberger, Information Management Branch Manager, 4201 east Arkansas Avenue, Denver, Colorado 80222

Colorado Department of Transportation seeks approval of the proposed discontinuance of the automatic block signal system, on the single main track, on the Towner Rail Line, between NA Junction, milepost 869.4 and Towner, milepost 747.5, on the former Union Pacific Railroad's Kansas Division, Hoisington Subdivision, a distance of approximately 122 miles, in southeastern Colorado. The proposal stipulates that signals 8677, 8694, and 8695 will remain in service, while all other discontinued signals will be turned and bagged.

The reasons given for the proposed changes are that the lease or operation of the Towner Line, by a short line railroad operator, will normally result in the scheduling of only one train on the line at any given time during the initial years of operation, and that a Track Warrant Control method of operation will provide operational safety in the event that it becomes necessary to operate more than one train at a time on the line.

Any interested party desiring to protest the granting of an application shall set forth specifically the grounds upon which the protest is made, and contain a concise statement of the interest of the Protestant in the proceeding. Additionally, one copy of the protest shall be furnished to the applicant at the address listed above.

All communications concerning this proceeding should be identified by the docket number and must be submitted to the Docket Clerk, DOT Central Docket Management Facility, Room PI–401, Washington, DC 20590–0001.

Communications received within 45 days of the date of this notice will be considered by the FRA before final action is taken. Comments received after that date will be considered as far as practicable. All written communications concerning these proceedings are available for examination during regular business hours (9 a.m.—5 p.m.) at DOT Central Docket Management Facility, Room PI–401 (Plaza Level), 400 Seventh Street, SW, Washington, DC 20590–0001. All documents in the public docket are also available for inspection and copying on the internet at the docket facility's Web site at *http://dms.dot.gov.*

FRA expects to be able to determine these matters without an oral hearing. However, if a specific request for an oral hearing is accompanied by a showing that the party is unable to adequately present his or her position by written statements, an application may be set for public hearing.

Issued in Washington, DC on May 25, 2000.

Grady C. Cothen, Jr.,

Deputy Associate Administrator for Safety Standards and Program Development.

[FR Doc. 00–14053 Filed 6–5–00; 8:45 am]

BILLING CODE 4910–06–P

DEPARTMENT OF TRANSPORTATION

Federal Railroad Administration

Notice of Application for Approval of Discontinuance or Modification of a Railroad Signal System or Relief From the Requirements of Title 49 Code of Federal Regulations Part 236

Pursuant to Title 49 Code of Federal Regulations (CFR) part 235 and 49 U.S.C. 20502(a), the following railroads have petitioned the Federal Railroad Administration (FRA) seeking approval for the discontinuance or modification of the signal system or relief from the requirements of 49 CFR part 236 as detailed below.

Docket No. FRA–2000–6923

Applicant: CSX Transportation, Incorporated, Mr. E.G. Peterson, Assistant Chief Engineer, Design and Construction, 4901 Belfort Road, Suite 130 (S/C J–350), Jacksonville, Florida 32256.

CSX Transportation Incorporated seeks approval of the proposed discontinuance and removal of the manual block system (DCS Operating Rules), on the single secondary track, between Weir, milepost 13.3 and Dock, milepost 28.2, near New Bedford, Massachusetts, New Bedford Subdivision, Albany Service Lane, and redesignation of the secondary track to an industrial track.

The reason given for the proposed changes is that density of traffic no longer warrants this type of train operation.

Any interested party desiring to protest the granting of an application shall set forth specifically the grounds upon which the protest is made, and contain a concise statement of the interest of the protestant in the proceeding. Additionally, one copy of the protest shall be furnished to the applicant at the address listed above.

All communications concerning this proceeding should be identified by the docket number and must be submitted to the Docket Clerk, DOT Central Docket Management Facility, Room PI–401, Washington, DC 20590–0001. Communications received within 45 days of the date of this notice will be considered by the FRA before final action is taken. Comments received after that date will be considered as far as practicable. All written communications concerning these proceedings are available for examination during regular business hours (9 a.m.–5 p.m.) at DOT Central Docket Management Facility, Room PI–401 (Plaza Level), 400 Seventh Street, SW, Washington, DC 20590–0001. All documents in the public docket are also available for inspection and copying on the internet at the docket facility's Web site at *http://dms.dot.gov.*

FRA expects to be able to determine these matters without an oral hearing. However, if a specific request for an oral hearing is accompanied by a showing that the party is unable to adequately present his or her position by written statements, an application may be set for public hearing.

Issued in Washington, DC on May 25, 2000.

Grady C. Cothen, Jr.,

Deputy Associate Administrator for Safety Standards and Program Development.

[FR Doc. 00–14054 Filed 6–5–00; 8:45 am]

BILLING CODE 4910–06–P

DEPARTMENT OF TRANSPORTATION

Coast Guard

[USCG–2000–7444]

National Boating Safety Advisory Council; Vacancies

AGENCY: Coast Guard, DOT.

ACTION: Request for applications.

SUMMARY: The Coast Guard seeks applications for membership on the National Boating Safety Advisory Council (NBSAC). NBSAC advises the Coast Guard on matters related to recreational boating safety.

DATES: Application forms should reach us on or before September 15, 2000.

ADDRESSES: You may request an application form by writing to Commandant (G-OPB–1), U.S. Coast Guard, 2100 Second Street SW., Washington, DC 20593–0001; by calling 202–267–0950; or by faxing 202–267–4285. Send your application in written form to the above street address. This notice and the application form are available on the Internet at http://dms.dot.gov.

FOR FURTHER INFORMATION CONTACT: Mr. A. J. Marmo, Executive Director of NBSAC, telephone 202–267–0950, fax 202–267–4285.

SUPPLEMENTARY INFORMATION: The National Boating Safety Advisory Council (NBSAC) is a Federal advisory committee under 5 U.S.C. App. 2. It advises the Coast Guard regarding regulations and other major boating safety matters. NBSAC members are drawn equally from the following sectors of the boating community: State officials responsible for State boating safety programs; recreational boat and associated equipment manufacturers; and national recreational boating organizations and the general public. Members are appointed by the Secretary of Transportation.

NBSAC normally meets twice each year at a location selected by the Coast Guard. When attending meetings of the Council, members are provided travel expenses and per diem.

We will consider applications for the following six positions that expire or become vacant in December 2000: one representative of State officials responsible for State boating safety programs; two representatives of recreational boat and associated equipment manufacturers; and three representatives of national recreational boating organizations. Applicants are considered for membership on the basis of their particular expertise, knowledge, and experience in recreational boating safety. Each member serves for a term of 3 years unless filling an unexpired term. Some members may serve consecutive terms.

In support of the policy of the Department of Transportation on gender and ethnic diversity, we encourage qualified women and members of minority groups to apply.

Dated: May 31, 2000.

Kenneth T. Venuto,

Rear Admiral, U.S. Coast Guard, Director of Operations Policy.

[FR Doc. 00–14155 Filed 6–5–00; 8:45 am]

BILLING CODE 4910–15–U

DEPARTMENT OF TRANSPORTATION

Federal Railroad Administration

Notice of Application for Approval of Discontinuance or Modification of a Railroad Signal System or Relief From the Requirements of Title 49 Code of Federal Regulations Part 236

Pursuant to Title 49 Code of Federal Regulations (CFR) Part 235 and 49 U.S.C. 20502(a), the following railroads have petitioned the Federal Railroad Administration (FRA) seeking approval for the discontinuance or modification of the signal system or relief from the requirements of 49 CFR Part 236 as detailed below.

[Docket No. FRA-2000–6925]

Applicant: CSX Transportation, Incorporated, Mr. E.G. Peterson, Assistant Chief Engineer, Design and Construction, 4901 Belfort Road, Suite 130 (S/C J–350), Jacksonville, Florida 32256.

CSX Transportation Incorporated seeks approval of the proposed modification of the traffic control system, on the single main track, at Wapakoneta, Ohio, milepost 118.0, on the Dayton Subdivision, Louisville Service Lane, consisting of the discontinuance and removal of absolute controlled signals 55R and 55L.

The reason given for the proposed changes is that under current operating conditions the need for these hold-out signals no longer exists, and their removal will increase operating efficiency.

Any interested party desiring to protest the granting of an application shall set forth specifically the grounds upon which the protest is made, and contain a concise statement of the interest of the Protestant in the proceeding. Additionally, one copy of the protest shall be furnished to the applicant at the address listed above.

All communications concerning this proceeding should be identified by the docket number and must be submitted to the Docket Clerk, DOT Central Docket Management Facility, Room PI–401, Washington, DC 20590–0001. Communications received within 45 days of the date of this notice will be considered by the FRA before final action is taken. Comments received after that date will be considered as far as practicable. All written communications concerning these proceedings are available for examination during regular business hours (9 a.m.–5 p.m.) at DOT Central Docket Management Facility, Room PI–401 (Plaza Level), 400 Seventh Street, SW, Washington, DC 20590–0001. All documents in the public docket are also available for inspection and copying on the internet at the docket facility's Web site at *http://dms.dot.gov.*

FRA expects to be able to determine these matters without an oral hearing. However, if a specific request for an oral hearing is accompanied by a showing that the party is unable to adequately present his or her position by written statements, an application may be set for public hearing.

Issued in Washington, DC on May 25, 2000.

Grady C. Cothen, Jr.,

Deputy Associate Administrator for Safety Standards and Program Development.

[FR Doc. 00–14056 Filed 6–5–00; 8:45 am]

BILLING CODE 4910–06–P

DEPARTMENT OF TRANSPORTATION

Federal Railroad Administration

Notice of Application for Approval of Discontinuance or Modification of a Railroad Signal System or Relief From the Requirements of Title 49 Code of Federal Regulations Part 236

Pursuant to Title 49 Code of Federal Regulations (CFR) Part 235 and 49 U.S.C. 20502(a), the following railroads have petitioned the Federal Railroad Administration (FRA) seeking approval for the discontinuance or modification of the signal system or relief from the requirements of 49 CFR Part 236 as detailed below.

[Docket No. FRA–2000–6926]

Applicant: CSX Transportation, Incorporated, Mr. E.G. Peterson, Assistant Chief Engineer, Design and Construction, 4901 Belfort Road, Suite 130 (S/C J–350), Jacksonville, Florida 32256.

CSX Transportation Incorporated seeks approval of the proposed modification of the signal system, on Tracks A and B, milepost 134.2, on the Landover Line, Baltimore Service Lane, near Anacostia, District of Columbia, consisting of the discontinuance and removal of the No. 7D and No. 9D power-operated derails.

The reason given for the proposed changes is that the need for the derails does not exist under the current operating conditions, and their removal will increase efficiency.

Any interested party desiring to protest the granting of an application shall set forth specifically the grounds upon which the protest is made, and contain a concise statement of the interest of the Protestant in the proceeding. Additionally, one copy of the protest shall be furnished to the applicant at the address listed above.

All communications concerning this proceeding should be identified by the docket number and must be submitted to the Docket Clerk, DOT Central Docket Management Facility, Room PI–401, Washington, DC 20590–0001. Communications received within 45 days of the date of this notice will be considered by the FRA before final action is taken. Comments received after that date will be considered as far as practicable. All written communications concerning these proceedings are available for examination during regular business hours (9 a.m.–5 p.m.) at DOT Central Docket Management Facility, Room PI–401 (Plaza Level), 400 Seventh Street, SW., Washington, DC 20590–0001. All documents in the public docket are also available for inspection and copying on the internet at the docket facility's Web site at *http://dms.dot.gov.*

FRA expects to be able to determine these matters without an oral hearing. However, if a specific request for an oral hearing is accompanied by a showing that the party is unable to adequately present his or her position by written statements, an application may be set for public hearing.

Issued in Washington, DC on May 25, 2000.

Grady C. Cothen, Jr.,

Deputy Associate Administrator for Safety Standards and Program Development.

[FR Doc. 00–14057 Filed 6–5–00; 8:45 am]

BILLING CODE 4910–06–P

DEPARTMENT OF TRANSPORTATION

Federal Railroad Administration

Notice of Application for Approval of Discontinuance or Modification of a Railroad Signal System or Relief From the Requirements of Title 49 Code of Federal Regulations Part 236

Pursuant to Title 49 Code of Federal Regulations (CFR) part 235 and 49 U.S.C. 20502(a), the following railroads have petitioned the Federal Railroad Administration (FRA) seeking approval for the discontinuance or modification of the signal system or relief from the requirements of 49 CFR part 236 as detailed below.

Docket No. FRA–2000–6888

Applicant: Missouri and Northern Arkansas Railroad, Company, Incorporated, Mr. David L. Smoot, Vice President and Regional General Manager, 514 North Orner, P.O. Box 776, Carthage, Missouri 64836.

Missouri and Northern Arkansas Railroad Company, Incorporated (MNA) seeks approval of the proposed discontinuance and removal of the automatic interlocking and associated signals, at Carthage, Missouri, milepost 526.85, where the single main track of the MNA Aurora Subdivision, cross at grade, the single main track of the MNA Carthage Industrial Track, including installation of a swing gate and stop signs normally lined and locked against the industrial track.

The reasons given for the proposed changes are that the MNA now has control of both rail lines; all through train movements are north and southbound on the Aurora Subdivision; the east and west interlocking approaches are now part of the Carthage Industrial Track, and used to access industry switching locations and rail car storage tracks; and all trains operating through the interlocking limits are MNA trains.

Any interested party desiring to protest the granting of an application shall set forth specifically the grounds upon which the protest is made, and contain a concise statement of the interest of the Protestant in the proceeding. Additionally, one copy of the protest shall be furnished to the applicant at the address listed above.

All communications concerning this proceeding should be identified by the docket number and must be submitted to the Docket Clerk, DOT Central Docket Management Facility, Room PI–401, Washington, DC 20590–0001. Communications received within 45 days of the date of this notice will be considered by the FRA before final action is taken. Comments received after that date will be considered as far as practicable. All written communications concerning these proceedings are available for examination during regular business hours (9 a.m.–5 p.m.) at DOT Central Docket Management Facility, Room PI–401 (Plaza Level), 400 Seventh Street, SW, Washington, DC 20590–0001. All documents in the public docket are also available for inspection and copying on the internet at the docket facility's Web site at *http://dms.dot.gov.*

FRA expects to be able to determine these matters without an oral hearing. However, if a specific request for an oral hearing is accompanied by a showing that the party is unable to adequately present his or her position by written statements, an application may be set for public hearing.

Issued in Washington, DC on May 25, 2000.

Grady C. Cothen, Jr.,

Deputy Associate Administrator for Safety Standards and Program Development.

[FR Doc. 00–14050 Filed 6–5–00; 8:45 am]

BILLING CODE 4910–06–P

DEPARTMENT OF TRANSPORTATION

Federal Railroad Administration

Notice of Application for Approval of Discontinuance or Modification of a Railroad Signal System or Relief From the Requirements of Title 49 Code of Federal Regulations Part 236

Pursuant to title 49 Code of Federal Regulations (CFR) part 235 and 49 U.S.C. 20502(a), the following railroads have petitioned the Federal Railroad Administration (FRA) seeking approval for the discontinuance or modification of the signal system or relief from the requirements of 49 CFR part 236 as detailed below.

[Docket No. FRA–2000–6889]

Applicant: Union Pacific Railroad Company, Mr. Phil Abaray, Chief Engineer—Signals, 1416 Dodge Street, Room 1000, Omaha, Nebraska 68179–1000

Union Pacific Railroad Company seeks approval of the proposed modification of the traffic control system, on two main and running tracks, between milepost 3.6 and milepost 4.0, in Omaha, Nebraska, consisting of the the following:

1. Removal of the power-operated crossover at milepost 3.6, between Main Tracks No. 1 and No. 2;

2. Conversion of the power-operated crossover at milepost 3.9, between Main Track No. 1 and the North Running Track, to hand operation, equipped with an electric switch lock for the main track;

3. Removal of the power-operated derail on the North Running Track near milepost 3.9; and

4. Discontinuance and removal of eastbound controlled signals No's 112, 124, 126, 132, and 142, and westbound controlled signals No's 130, 136, 144, and 146.

The reason given for the proposed changes is that due to changes in operation the power crossovers are no longer used, and their associated signals are no longer needed; the proposed changes will increase efficiency and improve train handling by increasing block lengths.

Any interested party desiring to protest the granting of an application shall set forth specifically the grounds upon which the protest is made, and contain a concise statement of the interest of the Protestant in the proceeding. Additionally, one copy of the protest shall be furnished to the applicant at the address listed above.

All communications concerning this proceeding should be identified by the docket number and must be submitted to the Docket Clerk, DOT Central Docket Management Facility, Room PI–401, Washington, D.C. 20590–0001. Communications received within 45 days of the date of this notice will be considered by the FRA before final action is taken. Comments received after that date will be considered as far as practicable. All written communications concerning these proceedings are available for examination during regular business hours (9 a.m.–5 p.m.) at DOT Central Docket Management Facility, Room PI–401 (Plaza Level), 400 Seventh Street, SW, Washington, DC 20590–0001. All documents in the public docket are also available for inspection and copying on the internet at the docket facility's Web site at http://dms.dot.gov.

FRA expects to be able to determine these matters without an oral hearing. However, if a specific request for an oral hearing is accompanied by a showing that the party is unable to adequately present his or her position by written statements, an application may be set for public hearing.

Issued in Washington, DC on May 25, 2000.

Grady C. Cothen, Jr.,

Deputy Associate Administrator for Safety Standards and Program Development.

[FR Doc. 00–14051 Filed 6–1–00; 8:45 am]

BILLING CODE 4910–06–P

DEPARTMENT OF THE TREASURY

Fiscal Service

Surety Companies Acceptable on Federal Bonds: Termination—Frontier Insurance Company

AGENCY: Financial Management Service, Fiscal Service, Department of the Treasury.

ACTION: Notice.

SUMMARY: This is Supplement No. 21 to the Treasury Department Circular 570; 1999 Revision, published July 1, 1999, at 64 FR 35864.

FOR FURTHER INFORMATION CONTACT: Surety Bond Branch at (202) 874–6779.

SUPPLEMENTARY INFORMATION: Notice is hereby given that the Certificate of Authority issued by the Treasury to the above named Company, under the United States Code, Title 31, Sections 9304–9308, to qualify as an acceptable surety on Federal bonds is terminated effective today.

The Company was last listed as an acceptable surety on Federal bonds at 64 FR 35875, July 1, 1999.

With respect to any bonds, including continuous bonds, currently in force with above listed Company, bond-approving officers should secure new bonds with acceptable sureties in those instances where a significant amount of liability remains outstanding. In addition, in no event should bonds that are continuous in nature be renewed.

The Circular may be viewed and downloaded through the Internet at http://www.fms.treas.gov/c570/index.html. A hard copy may be purchased from the Government Printing Office (GPO), Subscription Service, Washington, DC, telephone (202) 512–1800. When ordering the Circular from GPO, use the following stock number: 048–000–00527–6.

Questions concerning this notice may be directed to the U.S. Department of the Treasury, Financial Management Service, Financial Accounting and Services Division, Surety Bond Branch, 3700 East-West Highway, Room 6A04, Hyattsville, MD 20782.

Dated: May 31, 2000.

Judith R. Tillman,

Assistant Commissioner, Financial Operations, Financial Management Service.

[FR Doc. 00–14188 Filed 6–5–00; 8:45 am]

BILLING CODE 4810–35–M

Federal Register

Tuesday,
June 6, 2000

Part II

Department of Transportation

Federal Aviation Administration

14 CFR Part 187

Fees for FAA Services for Certain Flights; Interim Rule

DEPARTMENT OF TRANSPORTATION

Federal Aviation Administration

14 CFR Part 187

[Docket No. FAA–00–7018; Amendment No. 187–11]

RIN 2120–AG17

Fees for FAA Services for Certain Flights

AGENCY: Federal Aviation Administration (FAA), DOT.

ACTION: Interim final rule with request for comments; notice of public meeting.

SUMMARY: This document establishes fees for FAA air traffic and related services for certain aircraft that transit U.S.-controlled airspace but neither take off from, nor land in, the United States. This action will allow the FAA to recover through fees the costs it incurs in providing these services. The FAA is requesting comments concerning the fee schedule and the fee collection process. In addition, the FAA is announcing a public meeting on the Interim Final Rule to provide an additional opportunity for the public to comment.

DATES: Effective date August 1, 2000. Comments must be received on or before October 4, 2000. The public meeting will be held on June 29, 2000.

ADDRESSES: Comments on this document should be mailed or delivered, in duplicate, to: U.S. Department of Transportation Dockets, Docket No. FAA–00–7018, 400 Seventh Street SW., Room Plaza 401, Washington, DC 20590. Comments may be filed and examined in Room Plaza 401 between 10 a.m. and 5 p.m. weekdays, except Federal holidays. Comments also may be sent electronically to the Dockets Management System (DMS) at the following Internet address: *http://dms.dot.gov/* at any time. Commenters who wish to file comments electronically should follow the instructions on the DMS web site.

The public meeting will be held at the Holiday Inn Capitol, 550 C Street, SW., Washington, DC 20024; Registration: 8:30 a.m.; Meeting: 9 a.m.–4 p.m.

FOR FURTHER INFORMATION CONTACT: Randall Fiertz, Office of Performance Management, (APF–1), Federal Aviation Administration, 800 Independence Avenue, SW., Washington, DC 20591; telephone (202) 267–7140; fax (202) 493–4191.

Requests to present a statement at the public meeting on the Fees for FAA Services for Certain Flights Interim Final Rule and questions regarding the logistics of the meeting should be directed to Judy Courbois, Office of Rulemaking (ARM–102), Federal Aviation Administration, 800 Independence Avenue, SW., Washington, DC 20591, telephone (202) 267–9783; fax (202) 267–5075.

SUPPLEMENTARY INFORMATION:

Comments Invited

Interested persons are invited to participate in this rule by submitting such written data, views, or arguments as they may desire. Comments relating to the environmental, energy, federalism, or economic impact that might result from adopting the rules in this document also are invited. The FAA specifically seeks comments on the fee schedule, formulas used to determine the cost per unit, the associated collection process, and the scope of services for which costs will be recovered. Comments must identify the regulatory docket or amendment number and be submitted in duplicate to the DOT Rules Docket address specified above.

All comments received, as well as a report summarizing each substantive public contact with FAA personnel concerning this rulemaking, will be filed in the docket. The docket is available for public inspection before and after the comment closing date. All comments received on or before the closing date will be considered by the Administrator before taking final action on this rulemaking. Comments filed late will be considered as far as possible without incurring expense or delay. The proposals in this document may be changed in light of the comments received.

Commenters wishing the FAA to acknowledge receipt of their comments submitted in response to this document must include a pre-addressed, stamped postcard with those comments on which the following statement is made: ''Comments to Docket No. FAA–00–7018.'' The postcard will be date stamped and mailed to the commenter. The 120-day comment period is intended to allow the international commenters sufficient time to submit comments.

In order to give the public an additional opportunity to comment on the Interim Final Rule, the FAA is planning a public meeting. Because of this additional opportunity to comment on the Interim Final Rule, the FAA does not intend to extend the closing date for comments.

Requests from persons who wish to present oral statements at the public meeting on Fees for FAA Services for Certain Flights Interim Final Rule should be received by the FAA no later than June 22, 2000. Such requests should be submitted to Judy Courbois, as listed in the section titled **FOR FURTHER INFORMATION CONTACT**. Requests received after June 22, 2000, will be scheduled if time is available during the meeting; however, the names of those individuals may not appear on the written agenda. The FAA will prepare and make available at the meeting an agenda listing the scheduled speakers. To accommodate as many speakers as possible, the amount of time allocated to each speaker may be less than the amount of time requested. Any person desiring to have available audiovisual equipment should notify the FAA when requesting to be placed on the agenda.

Public Meeting Procedures

The public meeting will be held on June 29, 2000, at the Holiday Inn Capitol, 550 C Street, SW., Washington, DC 20024; Registration: 8:30 a.m.; Meeting: 9 a.m.–4 p.m.

The following procedures are established to facilitate the public meeting on the Interim Final Rule:

1. There will be no admission fee or other charge to attend or to participate in the public meeting. The meeting will be open to all persons who have requested in advance to present statements or who register on the day of the meeting (between 8:30 a.m. and 9 a.m.) subject to availability of space in the meeting room.
2. The public meeting may adjourn early if scheduled speakers complete their statements in less time than is scheduled for the meeting.
3. The FAA will try to accommodate all speakers; therefore, it may be necessary to limit the time available for an individual or group.
4. Representatives of the FAA will conduct the public meeting. A panel of FAA personnel involved in this issue will be present.
5. Participants should address their comments to the panel. No participant will be subject to cross-examination by any other participant.
6. Sign and oral interpretation can be made available at the meeting, as well as an assistive listening device, if requested no later than 1 week before the meeting.
7. The meeting will be recorded by a court reporter. A transcript of the meeting and any material accepted by the panel during the meeting will be included in the public docket (Docket No. FAA–00–7018). Any person who is interested in purchasing a copy of the transcript should contact the court reporter directly. This information will be available at the meeting.

8. The FAA will review and consider all material presented by participants at the public meeting. Position papers or material presenting views or information related to the Interim Final Rule may be accepted at the discretion of the presiding officer and subsequently placed in the public docket. The FAA requests that persons participating in the meeting provide 10 copies of all materials to be presented for distribution to the panel members; other copies may be provided to the audience at the discretion of the participant.

9. Statements made by members of the public meeting panel are intended to facilitate discussion of the issues or to clarify issues. Because the meeting concerning the Fees for FAA Services for Certain Flights Interim Final Rule is being held during the comment period, final decisions concerning issues that the public may raise cannot be made at the meeting. The FAA may, however, ask questions to clarify statements made by the public and to ensure a complete and accurate record. Comments made at this public meeting will be considered by the FAA.

10. The meeting is designed to solicit public views on the Interim Final Rule. Therefore, the meeting will be conducted in an informal and nonadversarial manner.

Availability of the Interim Final Rule

An electronic copy of this document may be downloaded using a modem and suitable communications software from the FAA regulations section of the FedWorld electronic bulletin board service (telephone: (703) 321–3339) or the Government Printing Office (GPO)'s electronic bulletin board service (telephone: (202) 512–1661).

Internet users may reach the FAA's web page at http://www.faa.gov/avr/arm/nprm/nprm.htm or the GPO's web page at http://www.access.gpo.gov/nara access to recently published rulemaking documents.

Any person may obtain a copy of this document by submitting a request to the Federal Aviation Administration, Office of Rulemaking, ARM–1, 800 Independence Avenue SW., Washington, DC 20591, or by calling (202) 267–9680. Communications must identify the amendment number or docket number of this Interim Final Rule.

Persons interested in being placed on the mailing list for future rulemaking documents should request from the above office a copy of Advisory Circular No. 11–2A, Notice of Proposed Rulemaking Distribution System, which describes the application procedure.

Small Business Regulatory Enforcement Fairness Act

The Small Business Regulatory Enforcement Fairness Act (SBREFA) of 1996, requires the FAA to comply with small entity requests for information or advice about compliance with statutes and regulations within its jurisdiction. Therefore, any small entity that has a question regarding this document may contact their local FAA official. Internet users can find additional information on SBREFA on the FAA's web page at *http://www.faa.gov/avr/arm/sbrefa.htm* and may send electronic inquiries to the following Internet address: *9–AWA–SBREFA@faa.gov.*

Background

Authority To Establish Fees

The Federal Aviation Reauthorization Act of 1996 (the Act) directs the FAA to establish by Interim Final Rule a fee schedule and collection process for air traffic control (ATC) and related services provided to aircraft, other than military and civilian aircraft of the U.S. Government or of a foreign government, that neither take off from, nor land in, the United States (49 U.S.C. 45301, as amended by Pub. L. 104–264).

Also, the Act directs the FAA to ensure that the fees allowed by the Act are directly related to the FAA's costs of providing the service rendered. The Act further states that services for which costs may be recovered include the costs of ATC, navigation, weather services, training and emergency services that are available to facilitate safe transportation over the United States, and other services provided by the Administrator or by programs financed by the Administrator to flights that neither take off from, nor land in, the United States.

History

On March 20, 1997, the FAA published an Interim Final Rule, Fees for Air Traffic Services for Certain Flights through U.S.-Controlled Airspace (62 FR 13496), which established fees for FAA air traffic and related services provided to certain aircraft that transit U.S.-controlled airspace but neither take off from, nor land in, the United States. The FAA invited public comment on this Interim Final Rule. The effective date of the rule was May 19, 1997, and the comment period closed on July 18, 1997. In addition, the FAA held a public meeting on May 1, 1997. The FAA also published two additional Interim Final Rules that amended the original Interim Final Rule on May 2, 1997 (62 FR 24285) and October 2, 1997 (62 FR 51735).

This rulemaking was subsequently challenged. The Airline Transportation Association of Canada and six airlines petitioned the United States Court of Appeals for the District of Columbia (court) to review the rule.

On January 30, 1998, the court issued its opinion on the seven petitions consolidated in the case of *Asiana Airlines et al.,* v. *the FAA,* 328 U.S. App. D.C. 237, 134 F. 3d 393, 1998 U.S. App. LEXIS 1286 (1998). The court rejected the petitioners' claims that the FAA acted improperly in employing an expedited procedure before the effective date of the Interim Final Rule, and that the FAA violated the anti-discrimination provisions of various international aviation agreements. However, the court concluded that the FAA's methodology of determining cost violated statutory requirements.

Therefore, the court vacated the Interim Final Rule in its entirety and remanded the Interim Final Rule to the FAA for further proceedings consistent with the opinion.

Since the date the court vacated the Interim Final Rule issued in 1997 the FAA has met with various user and aviation interest groups to listen to their concerns about fees under the Act. The last such meeting was on May 24, 2000, and included the Department of Transportation General Counsel and members of her staff. A summary of each these meetings can be found in the docket of this rulemaking.

The New Interim Final Rule

When Congress passed the Act it explicitly required the FAA to collect the relevant fees initially by establishing an Interim Final Rule. The D.C. Circuit referenced this fact in 1998, but nevertheless struck the FAA's earlier rule because it did not comport with another Congressional requirement, that is, that the fee be based on costs incurred and not value to the user paying the fee. Although nearly 4 years have passed since the passage of the Act, the Act continues to require that the fees be promulgated by Interim Final Rule (see in the docket the FAA Information Paper to ICAO, September 1998, entitled ''Fees for Air Traffic Services for Certain Flights through U.S.-Controlled Airspace'').

The Congressional purpose of requiring the fees by Interim Final Rule has not been changed by the passage of time. Congress has not changed the statutory requirements (despite multiple opportunities to do so) and has continued to appropriate funds each year based on the collection of these fees. (See May 25, 2000, letter in the

docket from Congressman Duncan, Chairman, Aviation Subcommittee.)

The FAA has at all times acted as quickly as possible in establishing the fees but, as noted by the court in 1998, the FAA has been constrained by the lack of accurate cost information on which to base the fees. The development of an accurate cost information system, which is the predicate for the imposition of reasonable fees, has been a time consuming but necessary process. Only recently has the FAA's new Cost Accounting System provided this information and only now can the FAA proceed with rulemaking as directed by 49 U.S.C. 45301. The FAA has therefore determined that the Act continues to require that the fees the FAA is now imposing be established initially as an Interim Final Rule.

Therefore, effective 60 days after the publication of this Interim Final Rule, the FAA will again assess a fee for air traffic and related services provided to users of aircraft that transit U.S.-controlled airspace (airspace owned or delegated to the United States) but do not take off from or land in the United States. The rule does not apply to military and civil aircraft operated by the U.S. Government or by a foreign government or to certain Canada-to-Canada flights.

For the purpose of this rulemaking, U.S.-controlled airspace includes all U.S. airspace either directly owned by the United States or allocated to the United Sates by the International Civil Aviation Organization or by other countries. This can further be defined in general as enroute and oceanic airspace. Enroute airspace is generally defined, for the purpose of this rulemaking, as airspace where primarily radar-based air traffic services are provided. Oceanic airspace is generally defined, for the purpose of this rulemaking, as airspace where primarily procedural air traffic services are provided. A description of the U.S.-controlled airspace by latitude and longitude has been placed in the public docket of this rulemaking.

Canada-to-Canada operations are defined (hereafter ''Canada-to-Canada'') as flights conducted by any aircraft of any nationality that take off from and land in Canada without an intermediate stop outside of Canada that operate in U.S.-controlled airspace. Users are defined as operators of aircraft flights that neither depart from nor land in the United States.

Flights that transit U.S.-controlled airspace but do not land in or depart from the United States (overflights) currently contribute nothing financially to the provision of air traffic services (ATS). This is despite the fact that these flights use ATS and other services that impose costs on the U.S. ATC system. Congress has determined in the 1996 Act that these users should bear a portion of the cost of those services.

The air transportation environment has changed over the past decades with the advent of increasing numbers of long-range aircraft. The use of these aircraft and the routes they are able to fly have greatly increased the efficiency of air transportation. Although these overflight operations do not generally enter areas of high density air traffic, they do use FAA ATS.

Operators of overflight aircraft benefit from the FAA's provision of ATS in several ways. First, and most importantly, FAA's ATS enhance safety through ATC, navigation, and communications services. Second, flight through U.S.-controlled airspace provides optimized routing for long-distance aircraft, which is of great value to the users of these aircraft. The level of ATS and other services that is actually provided to operators of overflights depends, in part, on the portions of U.S.-controlled airspace such flights transit. These services can include communications, navigation, radar surveillance, emergency services, and flight information services. For aircraft transiting U.S. enroute airspace, Air Route Traffic Control Centers (ARTCCs) provide separation by means of radar surveillance (if they are operating under instrument flight rules or in airspace above 18,000 feet). Also, these flights generally use navigational aids and radio communication with ARTCCs. These services are also provided in certain oceanic areas near islands such as Bermuda and The Bahamas.

For aircraft transiting oceanic airspace, where radar surveillance and navigational aids are not available, navigation is generally conducted by on-board systems. Aircraft separation, however, is provided under procedural control, under which flights report their position to an air traffic controller each time they fly over a specified reporting point.

The FAA estimates that approximately 235,000 non-public (*i.e.* aircraft that are not exempt) flights transit U.S.-controlled airspace without landing or taking off annually (see the report entitled ''Overflight Fee Development Report,'' which has been placed in the docket).

The cost to the FAA associated with overflights covered under this rule is projected to be approximately $50.4 million, including the cost of developing and collecting the fees. This amount represents the sum of the separate costs for providing ATC and related services to overflights flying through enroute and oceanic airspace as well as all development costs and all projected collection costs associated with the fees.

Charging overflights for ATS and related services is accepted in the international arena. The International Civil Aviation Organization (ICAO) states that ''where air navigation services are provided for international use, the providers may require the users to pay their share of the costs * * *.'' (Statements by the Council to Contracting States on Charges for Airports and Air Navigation Services, Paragraph 32 (Doc. 9082/5)). Further, paragraph 42 of Doc. 9082/5 notes that ''providers * * * may require all users to pay their share of the costs of providing them regardless of whether or not utilization takes place over the territory of the provider state.'' (Document 9082/5 has been placed in the docket.)

Canada-to-Canada Operations

Currently, many Canadian flights transit U.S.-controlled airspace because of air traffic coordination between the United States and Canada. Routing through U.S.-controlled airspace by U.S. or Canadian ATC occurs because it is either the shortest route or it offers the most favorable flight conditions. This frequent and variable routing is done without regard to the border between Canada and the United States.

The FAA has a long-standing ATC relationship with the Canadian ATC authority, currently known as NAV CANADA, beginning with an exchange of notes between the United States and Canadian governments in 1963. The FAA has determined that assessing fees on Canada-to-Canada flights would be inconsistent with: (1) 49 U.S.C. 106(l), 40103, and 40105; (2) the FAA's international agreements with Canada; and (3) the safety of all trans-border U.S.-Canadian flights. This determination gives maximum effect to all applicable statutes and agreements. The FAA's costs associated with Canada-to-Canada flights have been excluded from the cost base that overflight fees recoup. Accordingly, the total cost of overflights is $50.4 million, but expected billing is approximately $39.6 million (the difference being attributed to the FAA's agreements with NAV CANADA). These costs do not consider operational benefits under the agreements with Canada.

The Overflight Fee

As noted above, the Act directs the FAA to establish a fee schedule and collection process for ATC and related services provided to aircraft other than military and civil aircraft operated by the U.S. government or by a foreign government that neither take off from, nor land in, the United States. The Act further directs the FAA to issue the initial fee schedule and associated collection process as an Interim Final Rule, to ask for public comment, and to issue a subsequent final rule.

The Act requires that fees be directly related to the FAA's cost of providing the services rendered. Furthermore, the Conference Report for the Act states ''* * * assuming similar costs of serving different carrier and aircraft types, the fee may not vary based on factors such as aircraft seating capacity or revenue derived from passenger fares'' (Congressional Record, September 26, 1996, H11316.). Consistent with statutory direction, the sense of Congress, as documented in the Conference Report, and FAA's aviation safety mission, the FAA has developed a uniform and fair fee for all users based on the FAA's Cost Accounting System (CAS).

Two documents have been placed in the docket of this rulemaking that detail how the fees in this rule were determined and calculated. The first document, ''Cost Methodology Used to Develop Cost of Enroute and Oceanic ATC Services'' was prepared by the public accounting firm of Arthur Andersen. This document details how the FAA's new CAS, also required by the Act, determines the FAA's cost of the two air traffic services, enroute and oceanic. The second document, ''Overflight Fee Development Report,'' was prepared by the FAA. This document details how, based on the CAS, the FAA determined the cost of services provided to overflights based on the cost of enroute and oceanic services. The document also details how the fees were calculated in this rulemaking. Essentially, the overflight fee is computed based on distance flown through U.S.-controlled airspace. Separate computations are made for services provided in enroute airspace and in oceanic airspace to reflect the different costs of providing services in each of these environments.

The FAA will charge users $37.43 per 100 nautical miles (or portion thereof) flown in enroute airspace and $20.16 per 100 nautical miles (or portion thereof) flown in oceanic airspace.

Based on the second document, the fee for users (*i.e.,* operators of an aircraft overflight) is calculated as follows:

$$R_{ij} = (DO_{ij} \times CO) + (DE_{ij} \times CE)$$

Where:

R_{ij} = the fee charged to aircraft flying between city i and city j,

DO_{ij}= distance traveled in U.S.-controlled oceanic airspace expressed in hundreds of nautical miles for aircraft flying between city i and city j,

CO = $20.16 per 100 nautical miles flown in oceanic airspace,

DE_{ij} = distance traveled in U.S.-controlled enroute airspace expressed in hundreds of nautical miles for aircraft flying between city i and city j.

CE = $37.43 per 100 nautical miles flown in enroute airspace.

This formula assumes that actual entry and exit data are available for individual flights in U.S.-controlled airspace. If not, best available flight data will be used.

The fees are designed to charge only the directly related costs of FAA services to overflight users in a logical and fair manner.

Also, the FAA has determined that no fee will be assessed unless the cumulative charges exceed $250 per calendar month, based on Greenwich Mean Time (GMT), by any particular user. The fees in this Interim Final Rule, including the $250 exclusion, will be reviewed when the Final Rule is issued and at least once every 2 years, and adjusted to reflect changes in costs.

The following table illustrates the fee schedule.

BILLING CODE 4910–13–P

			Enroute			Oceanic			Total	
Origination	Destination		Rate 1/	Miles 2/	Charge	Rate 1/	Miles 2/	Charge	Miles 2/	Charge
Canada YVR International Airport, Vancouver	Mexico SJD San Jose Del Cabo		$37.43	1,084	$405.74	$20.16	---	---	1,084	$405.74
Asia NRT Narita Airport, Tokyo, Japan	Canada YYC Calgary, Alberta		$37.43	1,938	$725.39	$20.16	470	$94.75	2,408	$820.14
Europe AMS Amsterdam, Netherlands	Caribbean MBJ Montego Bay, Jamaica		$37.43	---	---	$20.16	2,118	$426.99	2,118	$426.99
Europe LHR Heathrow Airport London, Eng.	Mexico Mexico City		$37.43	1,515	$567.06	$20.16	256	$51.61	1,771	$618.67
Asia SEL Seoul, South Korea	Pacific Sydney, Australia		$37.43	---	---	$20.16	1,111	$223.98	1,111	$223.98

1/ Rates are expressed per 100 nautical miles.
2/ Miles are nautical miles.

Note: This diagram is for illustrative purposes only.

BILLING CODE 4910–13–C

Fee Collection Process and Enforcement

The FAA has established and maintains data from several sources, including but not limited to, flight plans and radar/radio data that identifies the point of entry and exit, aircraft registration number, and the type of aircraft for all aircraft entering U.S.-controlled airspace. Information will be extracted from the database and used, along with the fee formula, to compute each fee. The fee will include a charge to cover the cost of developing the fee as well as the cost of billing and collection.

The FAA will bill users pursuant to 49 CFR part 89 by sending a monthly invoice. Affected commercial users are requested to designate and submit to the FAA the name and address of a U.S. agent for billing. Users not providing a billing address will be billed at the address of record of the aircraft owner as maintained in the country where the aircraft is registered.

As provided in § 187.15(d), monthly remittance of fees of $1,000 or more are to be paid by electronic funds transfer. Monthly remittances below $1,000 may be paid by electronic funds transfer, check, money order, credit card, or draft. All payments must be in U.S. currency.

Invoices that become delinquent will be collected according to 49 CFR part 89. The FAA intends to pursue vigorously all delinquent balances to the extent provided by law.

If any adjustments are necessary in the fees billed or collected the FAA will follow the procedures in 49 CFR part 89 to settle debts of users. This includes issuing credits and refunds to users as appropriate and authorized by law.

Paperwork Reduction Act

In accordance with the requirements of the Paperwork Reduction Act of 1995 (44 U.S.C. 3507(d)), the information collection requirements associated with this interim final rule were submitted to the Office of Management and Budget (OMB) for review and approval. There are no new requirements for the information collection associated with this amendment. An estimated 300 to 600 aircraft operators are requested to provide the FAA the name, the address, and phone number of any operator obtaining overflight services. It is estimated to take between 5 minutes and several days to complete the one-page form, depending on how long it takes a carrier to notify its billing department, and for that department to set up an account from which to pay these funds, for a total of 50 hours. This would be a one-time collection unless the carrier needs to change any of the information provided to the FAA.

An agency may not conduct or sponsor, and a person is not required to respond to, a collection of information unless it displays a currently valid OMB control number. The OMB control number associated with this collection is Number 2120–0618.

Compatibility With ICAO Standards

In keeping with U.S. obligations under the Convention on International Civil Aviation, it is FAA policy to comply with International Civil Aviation Organization (ICAO) Standards and Recommended Practices to the maximum extent practicable. The FAA has reviewed the corresponding ICAO Standards and Recommended Practices and has identified no differences with these regulations.

Regulatory Evaluation Summary

Changes to Federal regulations must undergo several economic analyses. First, Executive Order 12866 directs that each Federal agency shall propose or adopt a regulation only upon a reasoned determination that the benefits of the intended regulation justify its costs. Second, the Regulatory Flexibility Act of 1980 requires agencies to analyze the economic effect of regulatory changes on small entities. Third, OMB directs agencies to assess the effect of regulatory changes on small entities and changes on international trade. In conducting these analyses, the FAA has determined that this Interim Final Rule is ''a significant regulatory action'' under section 3(f) of Executive Order 12866 and, therefore, is subject to review by OMB. The Interim Final Rule is considered significant under the regulatory policies and procedures of the Department of Transportation (44 FR 11034, February 26, 1979). This Interim Final Rule should not have a significant impact on a substantial number of small entities and will not constitute a barrier to international trade. All of these analyses have been prepared as a regulatory evaluation and are summarized below. The FAA invites the public to provide comments and supporting data on the assumptions made in this evaluation. All comments received will be considered in the final regulatory evaluation. A copy of the complete regulatory evaluation has also been placed into the docket.

Benefits

In addition to authority to establish fees, the Act directs the FAA to ensure that the fees are directly related to the FAA's costs of providing the service rendered. The Act states that services for which costs may be recovered include ATC, navigation, weather services, training, and emergency services. The fees collected will reimburse the FAA for the actual cost of services in the manner authorized by Congress. Thus, the beneficiaries of this service, rather than the taxpayer, would largely pay for the service provided by the FAA. Moreover, the fees being established by the FAA cover only the costs of providing these services.

Charging a user fee is expected to result in better allocation of scarce societal and FAA resources. A fee will establish a mechanism through which those who use a service cover the majority of the costs for resources necessary to fund the service that is provided. This will result in a more efficient allocation of resources, and the efficient allocation of resources will benefit society at large, because more resources will become available for other services demanded by the public.

The user fee is expected to generate approximately $39.6 million in billings during the first 12 months of this rule, including the cost of collections. The FAA believes the established fees are equitable and justified.

Cost of Collection of User Fees to the FAA

The FAA estimates a one-time development cost of approximately $1.6 million. The FAA will amortize these development costs over a 2-year period in equal annual amounts of approximately $800,000. A small portion of the original development costs are included in the current development costs because some items such as system design or hardware will be used for fee collection under the current rule. In addition to the development costs, the FAA estimates an annual operating cost of approximately $1 million.

The costs of collection of the fee are relatively small compared to the billings. The cost of collection will be reviewed at least once every 2 years at the same time when fee charges are reviewed and adjusted to reflect the current costs of performing the services covered. The first review will be scheduled for no later than 2 years after the date of publication of the Final Rule. Fees will be adjusted to reflect historical great circle distance entry and exit mileage within U.S.-controlled airspace.

Regulatory Flexibility Determination

The Regulatory Flexibility Act of 1980 (RFA) establishes ''as a principle of regulatory issuance that agencies shall endeavor, consistent with the objective of the rule and of applicable statutes, to

fit regulatory and informational requirements to the scale of the business, organizations, and governmental jurisdictions subject to regulation.'' To achieve that principle, the RFA requires agencies to solicit and consider flexible regulatory proposals and to explain the rationale for their actions. The RFA covers a wide-range of small entities, including small businesses, not-for-profit organizations, and small governmental entities.

Agencies must perform a review to determine whether a proposed or final rule will have a significant economic impact on a substantial number of small entities. If the determination is that it will, the agency must prepare a regulatory flexibility analysis as described in the RFA.

However, if an agency determines that a proposed or final rule is not expected to have a significant economic impact on a substantial number of small entities, section 605(b) of the RFA provides that the head of the agency may so certify and a regulatory flexibility analysis is not required. The certification must include a statement providing the factual basis for this determination, and the reasoning should be clear.

The overflight fee will primarily affect foreign users. Since the RFA applies to domestic entities and does not apply to foreign entities, no consideration of the Interim Final Rule's impact on foreign users is required. In addition, because no fee will be assessed to a user unless they accumulate charges that exceed $250 per month, small domestic and infrequent operators should not be impacted by the rule. Accordingly, the FAA certifies that this rule will not have a significant economic impact on a substantial number of small entities.

International Trade Impact

The overflight provisions will primarily affect foreign commercial operators. Most commercial aircraft are designed to operate more efficiently at altitudes in excess of 18,000 feet. All operations at altitudes at or above 18,000 feet controlled by the United States must be under ATC. The FAA believes that it is unlikely that foreign commercial users will alter behavior to avoid using ATS and other services. In addition, to some extent, commercial users are able to pass the overflight fee on to their passengers or cargo customers.

The Interim Final Rule may have a favorable competitive impact on U.S. commercial operators. Currently U.S. commercial operators are at a comparative disadvantage with their foreign counterparts when users (U.S. and foreign) must pay user fees to transit other countries' airspace while foreign users do not have to pay a fee to transit U.S.-controlled airspace. The Interim Final Rule could enhance the competitiveness of domestic commercial operators in international markets.

Executive Order 13132, Federalism

The FAA has analyzed this interim final rule under the principles and criteria of Executive Order 13132, Federalism. The FAA has determined that this action will not have a substantial direct effect on the States, on the relationship between the national Government and the States, or on the distribution of power and responsibilities among the various levels of government. Therefore, the FAA has determined that this interim final rule does not have federalism implications.

Unfunded Mandates Reform Act

Title II of the Unfunded Mandates Reform Act of 1995 (UMRA), codified in 2 U.S.C. 1501–1571, requires each Federal agency, to the extent permitted by law, to prepare a written assessment of the effects of any Federal mandate in a proposed or final agency rule that may result in the expenditure by State, local, and tribal governments, in the aggregate, or by the private sector, of $100 million or more (adjusted annually for inflation) in any 1 year. Section 204(a) of the UMRA, 2 U.S.C. 1534(a), requires the Federal agency to develop an effective process to permit timely input by elected officers (or their designees) of State, local, and tribal governments on a proposed ''significant intergovernmental mandate.'' A ''significant intergovernmental mandate'' under the UMRA is any provision in a Federal agency regulation that will impose an enforceable duty upon State, local, and tribal governments, in the aggregate, of $100 million (adjusted annually for inflation) in any 1 year. Section 203 of the UMRA, 2 U.S.C. 1533, which supplements section 204(a), provides that before establishing any regulatory requirements that might significantly or uniquely affect small governments, the agency shall have developed a plan that, among other things, provides for notice to potentially affected small governments, if any, and for a meaningful and timely opportunity to provide input in the development of regulatory proposals.

This rule does not contain any Federal intergovernmental mandates or private sector mandate that exceeds $100 million in any 1 year.

Environmental Analysis

FAA Order 1050.1D defines FAA actions that may be categorically excluded from preparation of a National Environmental Policy Act environmental assessment or environmental impact statement. In accordance with FAA Order 1050.1D, appendix 4, paragraph 4(j), this rulemaking action qualifies for a categorical exclusion.

Energy Impact

The energy impact of the Interim Final Rule has been assessed in accordance with the Energy Policy and Conservation Act (EPCA), Pub. L. 94–163, and FAA Order 1053.1. It has been determined that the Interim Final Rule is not a major regulatory action under the provisions of the EPCA.

List of Subjects in 14 CFR Part 187

Administrative practice and procedure and Air transportation.

The Amendment

In consideration of the foregoing, the Federal Aviation Administration amends part 187 of Title 14, Code of Federal Regulations as follows:

PART 187—FEES

1. The authority citation for part 187 continues to read as follows:

Authority: 31 U.S.C. 9701, 49 U.S.C. 106(g), 49 U.S.C. 106(l)(6), 40104–40105, 40109, 40113–40114, 44702.

2. In § 187.1, add the following sentences to the end of the section:

§ 187.1 Scope.

* * * Appendix A to this part prescribes the methodology for computation of fees for certification services performed outside the United States. Appendix B to this part prescribes the fees for certain aircraft flights that transit U.S.-controlled airspace.

3. In § 187.15, add paragraph (d) to read as follows:

§ 187.15 Payment of fees.

* * * * *

(d) The fees described in appendix B of this part are payable to the Federal Aviation Administration in U.S. currency. Remittance of fees of $1,000 or more are to be paid by electronic funds transfer. Remittances below $1,000 may be paid by electronic funds transfer, check, money order, credit card, or draft.

4. In Part 187, add appendix B to read as follows:

Appendix B to Part 187—Fees for FAA Services for Certain Flights

(a) *Applicability.* Except as provided in paragraphs (b) and (c) of this appendix, this appendix applies to any person who conducts a flight through U.S.-controlled airspace that does not include a landing or takeoff in the United States. U.S.-controlled airspace is defined as all U.S. airspace either directly owned by the United States or allocated to the United States by the International Civil Aviation Organization or by other countries. This is further defined, for this section only, as enroute and oceanic airspace. Enroute airspace is defined, for this section only, as airspace where primarily radar-based air traffic services are provided. Oceanic airspace is defined, for this section only, as airspace where primarily procedural air traffic services are provided.

(b) *Governmental flights.* This appendix does not apply to any military or civil flight operated by the United States Government or by any foreign government.

(c) *Canada-to-Canada flights.* This appendix will not apply to any operator of a flight that takes off and lands in Canada, without an intermediate stop outside Canada, that operates in U.S.-controlled airspace.

(d) *Services.* Persons covered by paragraph (a) of this appendix must pay a fee for the use of certain services, including but not limited to the following:

(1) Air traffic management.

(2) Communications.

(3) Navigation.

(4) Radar surveillance, including separation services.

(5) Flight information services.

(6) Procedural control.

(7) Emergency services and training.

(e) *Methodology for the computation of fees.*

(1) For the use of any of the services listed in paragraph (d) of this appendix, the fee is computed based on the distance flown in either enroute or oceanic airspace (U.S.-controlled airspace.) Distance flown is based on the great circle distance (GCD) for the actual point of entry and the actual point of exit of U.S.-controlled airspace. Fees are assessed using the methodology presented in paragraph (e)(2) of this appendix. Where actual entry and exit points are not available, the best available flight data will be used to calculate the fee.

(2) A User (operator of an overflight) is assessed a fee for each 100 nautical miles (or portion thereof) flown in U.S.-controlled airspace. Separate calculations are made for transiting enroute and oceanic airspace. The total fee charged for an overflight between any two cities is equal to the sum of these two charges. This relationship is summarized as:

$$Ri_j = \$20.16*DO_{ij} + \$37.43*DE_{ij},$$

Where:

R_{ij} = the fee charged to aircraft flying between city i and city j,

DO_{ij}= distance traveled in U.S.-controlled oceanic airspace expressed in hundreds of nautical miles for aircraft flying between city i and city j,

DE_{ij} = distance traveled in U.S.-controlled enroute airspace expressed in hundreds of nautical miles for aircraft flying between city i and city j.

(f) *Billing and payment procedures.*

(1) *Billing.* The FAA will send an invoice to each user that is covered by this appendix when fees are owed to the FAA. No invoice will be sent unless the monthly (based on Greenwich Mean Time) fees for service equal or exceed $250. Users will be billed at the address of record in the country where the aircraft is registered, unless a billing address is otherwise provided.

(2) *Payment.* Payment must be made by one of the methods described in § 187.15(d).

(g) *Review of fees.* The fees prescribed in this appendix will be reviewed at least once every 2 years and adjusted to reflect the current costs of performing the services covered by this appendix.

Issued in Washington, DC, on May 30, 2000.

Jane F. Garvey,

Administrator.

[FR Doc. 00–14045 Filed 6–2–00; 8:45 am]

BILLING CODE 4910–13–P

Federal Register

Tuesday,
June 6, 2000

Part III

Department of Defense
General Services Administration
National Aeronautics and Space Administration

48 CFR Chapter 1 et al.

Federal Acquisition Regulations; Final Rules

DEPARTMENT OF DEFENSE

GENERAL SERVICES ADMINISTRATION

NATIONAL AERONAUTICS AND SPACE ADMINISTRATION

48 CFR Chapter 1

Federal Acquisition Circular 97–18; Introduction

AGENCIES: Department of Defense (DoD), General Services Administration (GSA), and National Aeronautics and Space Administration (NASA).

ACTION: Summary presentation of final and interim rules.

SUMMARY: This document summarizes the Federal Acquisition Regulation (FAR) rules issued by the Civilian Agency Acquisition Council and the Defense Acquisition Regulations Council (Councils) in this Federal Acquisition Circular (FAC) 97–18. The Councils drafted these FAR rules using plain language in accordance with the White House memorandum, Plain Language in Government Writing, dated June 1, 1998. The Councils wrote all new and revised text using plain language. A companion document, the Small Entity Compliance Guide (SECG), follows this FAC. The FAC, including the SECG, is available via the Internet at http://www.arnet.gov/far.

DATES: For effective dates and comment dates, see separate documents which follow.

FOR FURTHER INFORMATION CONTACT: The FAR Secretariat, Room 4035, GS Building, Washington, DC 20405, (202) 501–4755, for information pertaining to status or publication schedules. For clarification of content, contact the analyst whose name appears in the table below in relation to each FAR case or subject area. Please cite FAC 97–18 and specific FAR case numbers. Interested parties may also visit our website at http://www.arnet.gov/far.

Item	Subject	FAR case	Analyst
I	Rescission of Office of Federal Procurement Policy Letters	2000–605	Olson
II	FAR Drafting Principles	1999–610	De Stefano
III	Requirements Supporting Procurement of Recycled Products and Environmentally Preferable Services	1998–015 (98–015)	Linfield
IV	General Records Schedules	1999–615	Nelson
V	Federal Supply Schedules Small Business Opportunities	1998–609 (98–609)	Nelson
VI	Trade Agreements Thresholds	2000–004	Linfield
VII	Restrictions on Acquisitions from Yugoslavia and Afghanistan	1999–008	Linfield
VIII	Applicability, Thresholds and Waiver of Cost Accounting Standards Coverage (Interim)	2000–301	Nelson
IX	Technical Amendments.		

SUPPLEMENTARY INFORMATION: Summaries for each FAR rule follow. For the actual revisions and/or amendments to these FAR cases, refer to the specific item number and subject set forth in the documents following these item summaries.

Federal Acquisition Circular 97–18 amends the FAR as specified below:

Item I—Rescission of Office of Federal Procurement Policy Letters (FAR Case 2000–605)

This final rule reflects editorial amendments removing unnecessary cross-references to policy letters that were rescinded by the Office of Federal Procurement Policy (OFPP) (65 FR 16968, March 30, 2000).

Item II—FAR Drafting Principles (FAR Case 1999–610)

This final rule adds Federal Acquisition Regulation drafting principles to enhance a common understanding of the regulation among all members of the acquisition team and other users. This rule affects all contracting officers who use the FAR. The final rule adds drafting conventions in FAR 1.108 and amends 1.105–2, 52.101, 52.104, 52.105, and 52.200 to reflect current FAR drafting conventions.

Item III—Requirements Supporting Procurement of Recycled Products and Environmentally Preferable Services (FAR Case 1998–015 (98–015))

This final rule implements Executive Order 13101, Greening the Government through Waste Prevention, Recycling, and Federal Acquisition, dated September 14, 1998. This rule is significant for all contracting officers who buy supplies, including supplies that are furnished under a service contract. The rule rewrites text currently in the FAR based on earlier Executive orders, but reorganizes and relocates some of the text to conform to plain language guidelines for Government writing. The rewrite and reorganization should make the text easier to use and understand. The revisions also emphasize Executive branch policies for the acquisition of products containing recovered material and other environmentally preferable products and services. The rule—

- Revises FAR Subpart 7.1 to ensure that requirements for printing and writing paper meet minimum content requirements specified in the E.O.;
- Revises Subpart 11.3 to add definitions and special requirements to implement E.O. requirements and Environmental Protection Agency (EPA) regulations governing acquisitions of printing and writing paper, and to clarify that contracting officers may include in solicitations additional information requirements when needed to determine if the offeror's product meets requirements for recycled content or related standards;
- Clarifies in Part 13 how the procurement requirements of the Resource Conservation and Recovery Act, 42 U.S.C. 6962, apply to micro-purchases and acquisitions that do not exceed $100,000; and
- Reorganizes and revises Subparts 23.4 and 23.7 and associated clauses.

Item IV—General Records Schedules (FAR Case 1999–615)

This final rule implements National Archives and Records Administration General Records Schedule 3, Procurement, Supply, and Grants Records (NARA Schedule 3), dated December 15, 1998. This rule affects all contracting officers. The rule—

- Rewrites and reorganizes the text already in the FAR to make it easier to understand.
- Simplifies the retention table by grouping several categories of records that were previously treated as separate records under more generic record categories (e.g., the contract file or the contract administration records).
- Deletes separate retention policy on signed original justifications and approvals, determinations and findings,

and rejected engineering change proposals. Those records are retained with the contract files shown in blocks 2 through 7 of the new retention table.

• Deletes the separate retention period for contract status, expediting, and production surveillance records. Those records are retained with the contract administration records shown in block 7 of the new retention table.

Item V—Federal Supply Schedules Small Business Opportunities (FAR Case 1998–609) (98–609))

This final rule amends the Federal Acquisition Regulation to ensure that small businesses holding contracts under the Federal Supply Schedules are afforded the maximum practicable opportunity to compete for and receive FSS purchases. This rule affects all ordering offices which place orders under Federal Supply Schedule contracts. The rule—

• Encourages ordering offices to consider the availability of small business concerns under the schedule and encourages ordering offices to consider small businesses when conducting evaluations before placing an order.

• Amends FAR Subpart 38.1 to reaffirm that the General Services Administration and agencies delegated the authority to establish a Federal Supply Schedule must comply with all statutory and regulatory requirements before issuance of a solicitation.

• Revises the FSS guidance in accordance with the plain language guidelines in a White House memorandum, Plain Language in Government Writing, dated June 1, 1998.

Item VI—Trade Agreements Thresholds (FAR Case 2000–004)

This final rule amends FAR Subparts 25.2, 25.4, 25.6, and 25.11, and the clauses at 52.225–11 and 52.225–12 to implement new dollar thresholds for application of the Trade Agreements Act (TAA) and North American Free Trade Agreement (NAFTA), as published by the U.S. Trade Representative in the **Federal Register** at 65 FR 17332, March 31, 2000. Contracting Officers must review the new thresholds when acquiring supplies, services, or construction, in order to select the appropriate contract clauses to implement the Buy American Act, Balance of Payments Program, trade agreements, and sanctions of European Union country end products and services.

Item VII—Restrictions on Acquisitions from Yugoslavia and Afghanistan (FAR Case 1999–008)

This final rule amends FAR Subpart 25.7, section 25.1103, and the associated clauses at 52.212–5, 52.213–4, and 52.225–13, to implement Executive Orders 13121 and 13129. These Executive orders, as modified by Office of Foreign Assets Control (OFAC) General Licenses Numbers 2 and 4, prohibit the importation into the United States of any goods or services from Serbia (excluding the territory of Kosovo) or the territory of Afghanistan controlled by the Taliban. As a matter of policy, the Government does not generally acquire, even for overseas use, supplies or services that cannot be imported lawfully into the United States.

This rule primarily affects contracting officers making purchases overseas, for overseas use, because the Treasury Department already prohibits import of these restricted goods and services into the United States. The rule is particularly beneficial to contracting officers facing unusual circumstances overseas (such as location within a restricted territory), explicitly providing an exception for such circumstances.

Item VIII—Applicability, Thresholds and Waiver of Cost Accounting Standards Coverage (FAR Case 2000–301)

This interim rule amends FAR Part 30, Cost Accounting Standards Administration, and the provision at FAR 52.230–1, Cost Accounting Standards Notices and Certification, to implement Section 802 of the National Defense Authorization Act for Fiscal Year 2000 (Pub. L. 106–65) and the Cost Accounting Standards (CAS) Board's interim rule, Applicability, Thresholds and Waiver of Cost Accounting Standards Coverage. The FAR rule revises policies affecting which contractors and subcontractors must comply with Cost Accounting Standards. The rule—

• Amends the provision at FAR 52.230–1, Cost Accounting Standards Notices and Certification, to remove the requirement that a contractor or subcontractor must have received at least one CAS-covered contract exceeding $1 million (''trigger contract'') to be subject to full CAS coverage, since the CAS Board removed this ''trigger contract'' amount from its corresponding solicitation provision, Cost Accounting Standards Notices and Certification, at 48 CFR 9903.201–3. The CAS Board established a new ''trigger contract'' dollar amount of $7.5 million in the CAS applicability section of its regulations (48 CFR 9903.201–1) rather than in its solicitation provision. Since FAR 30.201–1 already references this section, no FAR changes were required to address the new ''trigger contract'' dollar amount;

• Increases the dollar threshold for full CAS coverage from $25 million to $50 million; and

• Adds procedures and conditions for agency waiver of the applicability of CAS.

Item IX—Technical Amendments

These amendments update references and make editorial changes at sections 3.303, 5.204, 47.504, 49.601–1, and 49.601–2.

Dated: May 26, 2000.

Edward C. Loeb,

Director, Federal Acquisition Policy Division.

Federal Acquisition Circular

Federal Acquisition Circular (FAC) 97–18 is issued under the authority of the Secretary of Defense, the Administrator of General Services, and the Administrator for the National Aeronautics and Space Administration.

All Federal Acquisition Regulation (FAR) changes and other directive material contained in FAC 97–18 are effective June 6, 2000 except for Item VII which is effective July 6, 2000 and items II, III, IV, and V which are effective August 7, 2000. Each rule is applicable to solicitations issued on or after the rule's effective date.

Dated: May 26, 2000.

R.D. Kerrins, Jr., Col, USA,

Acting Director, Defense Procurement.

Dated: May 26, 2000.

Edward C. Loeb,

Acting Deputy Associate Administrator, Office of Acquisition Policy, General Services Administration.

Dated: May 25, 2000.

Anne Guenther,

Acting Associate Administrator for Procurement, National Aeronautics and Space Administration.

[FR Doc. 00–13816 Filed 6–1–00; 3:58 pm]

BILLING CODE 6820–EP–P

DEPARTMENT OF DEFENSE

GENERAL SERVICES ADMINISTRATION

NATIONAL AERONAUTICS AND SPACE ADMINISTRATION

48 CFR Parts 1, 9, 15, 22, 35, 37, and 42

[FAC 97–18; FAR Case 2000–605; Item I]

RIN 9000–AI80

Federal Acquisition Regulation; Rescission of Office of Federal Procurement Policy Letters

AGENCIES: Department of Defense (DoD), General Services Administration (GSA), and National Aeronautics and Space Administration (NASA).

ACTION: Final rule.

SUMMARY: The Civilian Agency Acquisition and the Defense Acquisition Regulations Council (Councils) have agreed on a final rule amending the Federal Acquisition Regulation (FAR) to make editorial amendments that remove unnecessary cross-references to policy letters that were rescinded by the Office of Federal Procurement Policy (OFPP).

DATES: Effective Date: June 6, 2000.

FOR FURTHER INFORMATION CONTACT: The FAR Secretariat, Room 4035, GS Building, Washington, DC, 20405, (202) 501–4755, for information pertaining to status or publication schedules. For clarification of content, contact Mr. Jeremy Olson, at (202) 501–0692. Please cite FAC 97–18, FAR case 2000–605.

SUPPLEMENTARY INFORMATION:

A. Background

OFPP published a notice in the **Federal Register** at 65 FR 16968, March 30, 2000, that rescinded 22 OFPP policy letters. The rescission of these 22 policy letters reflected OFPP's conclusion that the Federal Acquisition Regulation (FAR) contains the current policies. Any policies embodied in OFPP policy letters rescinded by the notice that are not reflected in the FAR either have been superseded by subsequent statutory changes or are otherwise no longer necessary. The OFPP **Federal Register** notice rescinded OFPP Policy Letters 77–2, 78–2, 78–3, 78–4, 79–1, 79–2, 80–3, 80–6, 80–8, 81–1, 81–2, 82–1, 83–1, 83–2, 83–3, 84–1, 85–1, 89–1, 91–2, 91–4, 92–5, and 95–1. Although the notice required no substantive FAR change, cross-references in the FAR to those rescinded policy letters are no longer necessary or appropriate. This final rule makes editorial amendments to the FAR to remove those cross-references.

This rule was not subject to Office of Management and Budget review under Section 6(b) of Executive Order 12866, Regulatory Planning and Review, dated September 30, 1993. This rule is not a major rule under 5 U.S.C. 804.

B. Regulatory Flexibility Act

The final rule does not constitute a significant FAR revision within the meaning of FAR 1.501 and Public Law 98–577, and publication for public comments is not required. However, the Council will consider comments from small entities concerning the affected FAR subparts 1, 9, 15, 22, 35, 37, and 42 in accordance with 5 U.S.C. 610. Interested parties must submit such comments separately and should cite 5 U.S.C. 601, *et seq.* (FAC 97–18, FAR case 2000–605), in correspondence.

C. Paperwork Reduction Act

The Paperwork Reduction Act does not apply because the changes to the FAR do not impose information collection requirements that require the approval of the Office of Management and Budget under 44 U.S.C. 3501, *et seq.*

List of Subjects in 48 CFR Parts 1, 9, 15, 22, 35, 37, and 42

Government procurement.

Dated: May 26, 2000.

Edward C. Loeb,

Director, Federal Acquisition Policy Division.

Therefore, DoD, GSA, and NASA amend 48 CFR parts 1, 9, 15, 22, 35, 37, and 42 as set forth below:

1. The authority citation for 48 CFR parts 1, 9, 15, 22, 35, 37, and 42 continues to read as follows:

Authority: 40 U.S.C. 486(c); 10 U.S.C. chapter 137; and 42 U.S.C. 2473(c).

PART 1—FEDERAL ACQUISITION REGULATIONS SYSTEM

2. In section 1.103, revise paragraph (a) to read as follows:

1.103 Authority.

(a) The development of the FAR System is in accordance with the requirements of the Office of Federal Procurement Policy Act of 1974 (Pub. L. 93–400), as amended by Pub. L. 96–83.

* * * * *

PART 9—CONTRACTOR QUALIFICATIONS

3. In section 9.500, revise paragraph (c) to read as follows:

9.500 Scope of subpart.

* * * * *

(c) Implements section 8141 of the 1989 Department of Defense Appropriation Act, Pub. L. 100–463, 102 Stat. 2270–47 (1988).

PART 15—CONTRACTING BY NEGOTIATION

15.304 [Amended]

4. In section 15.304, amend paragraph (c)(3)(iv) by removing ''(OFPP Policy Letter 92–5)''.

PART 22—APPLICATION OF LABOR LAWS TO GOVERNMENT ACQUISITIONS

22.1101 [Amended]

5. Amend section 22.1101 by removing the second, third, and fourth sentences.

PART 35—RESEARCH AND DEVELOPMENT CONTRACTING

35.000 [Amended]

6. Amend section 35.000 by removing paragraph (c).

PART 37—SERVICE CONTRACTING

7. Amend section 37.503 by revising paragraph (c) to read as follows:

37.503 Agency-head responsibilities.

* * * * *

(c) Specific procedures are in place before contracting for services to ensure compliance with OFPP Policy Letter 92–1, Inherently Governmental Functions; and

* * * * *

37.600 [Amended]

8. Amend section 37.600 by removing the last sentence.

PART 42—CONTRACT ADMINISTRATION AND AUDIT SERVICES

42.002 [Amended]

9. Amend section 42.002 in paragraph (a) by removing the parenthetical at the end of the sentence.

42.1500 [Amended]

10. Amend section 42.1500 by removing the second sentence.

[FR Doc. 00–13817 Filed 6–1–00; 3:58 pm]

BILLING CODE 6820–EP–P

DEPARTMENT OF DEFENSE

GENERAL SERVICES ADMINISTRATION

NATIONAL AERONAUTICS AND SPACE ADMINISTRATION

48 CFR Parts 1 and 52

[FAC 97–18; FAR Case 1999–610; Item II]

RIN 9000–AI66

Federal Acquisition Regulation; FAR Drafting Principles

AGENCIES: Department of Defense (DoD), General Services Administration (GSA), and National Aeronautics and Space Administration (NASA).

ACTION: Final rule.

SUMMARY: The Civilian Agency Acquisition Council and the Defense Acquisition Regulations Council (Councils) have agreed on a final rule amending the Federal Acquisition Regulation (FAR) to add FAR drafting principles to enhance a common understanding of the regulation among all members of the acquisition team and other users.

DATES: *Effective Date:* August 7, 2000.

Applicability Date: The FAR, as amended by this rule, is applicable to solicitations issued on or after August 7, 2000.

FOR FURTHER INFORMATION CONTACT: The FAR Secretariat, Room 4035, GS Building, Washington, DC, 20405, (202) 501–4755, for information pertaining to status or publication schedules. For clarification of content, contact Mr. Ralph De Stefano, Procurement Analyst, at (202) 501–1758. Please cite FAC 97–18, FAR case 1999–610.

SUPPLEMENTARY INFORMATION:

A. Background

The final rule amends FAR Parts 1 and 52 to enhance a common understanding of how the FAR is drafted. The final rule adds FAR 1.108 and amends 1.105–2, 52.101, 52.104, 52.105, and 52.200 to reflect current FAR drafting conventions.

DoD, GSA, and NASA published a proposed rule in the **Federal Register** on January 26, 2000 (65 FR 4346). Three respondents provided public comments. The Councils considered all the comments in the development of the final rule. The final rule revises the proposed rule as follows:

- FAR 1.108(d)(2) to clarify that contracting officers must not award or modify contracts to include the FAR change until the effective date of the FAR change.
- FAR 1.108(e) to include Executive orders, Office of Management and Budget policy letters, and Code of Federal Regulations citations.
- **Editorial changes throughout for clarity.**

This rule was not subject to Office of Management and Budget review under Section 6(b) of Executive Order 12866, Regulatory Planning and Review, dated September 30, 1993. This rule is not a major rule under 5 U.S.C. 804.

B. Regulatory Flexibility Act

The Department of Defense, the General Services Administration, and the National Aeronautics and Space Administration certify that this final rule will not have a significant economic impact on a substantial number of small entities within the meaning of the Regulatory Flexibility Act, 5 U.S.C. 601, *et seq.*, because the rule only addresses drafting principles and does not impose any additional requirements on Government offerors or contractors. We did not receive any comments regarding this determination as a result of publication of the proposed rule in the **Federal Register** on January 26, 2000 (65 FR 4346).

C. Paperwork Reduction Act

The Paperwork Reduction Act does not apply because the changes to the FAR do not impose information collection requirements that require the approval of the Office of Management and Budget under 44 U.S.C. 3501, *et seq.*

List of Subjects in 48 CFR Parts 1 and 52

Government procurement.

Dated: May 26, 2000.

Edward C. Loeb,

Director, Federal Acquisition Policy Division.

Therefore, DoD, GSA, and NASA amend 48 CFR parts 1 and 52 as set forth below:

1. The authority citation for 48 CFR parts 1 and 52 continues to read as follows:

Authority: 40 U.S.C. 486(c); 10 U.S.C. chapter 137; and 42 U.S.C. 2473(c).

PART 1—FEDERAL ACQUISITION REGULATIONS SYSTEM

2. Amend section 1.105–2 by revising paragraphs (a) and (b)(2) to read as follows:

1.105–2 Arrangement of regulations.

(a) *General.* The FAR is divided into subchapters, parts (each of which covers a separate aspect of acquisition), subparts, sections, and subsections.

(b) * * *

(2) Subdivisions below the section or subsection level consist of parenthetical alpha numerics using the following sequence: (a)(1)(i)(A)(*1*)(*i*).

* * * * *

3. Add section 1.108 to read as follows:

1.108 FAR conventions.

The following conventions provide guidance for interpreting the FAR:

(a) *Words and terms.* Definitions in Part 2 apply to the entire regulation unless specifically defined in another part, subpart, section, provision, or clause. Words or terms defined in a specific part, subpart, section, provision, or clause have that meaning when used in that part, subpart, section, provision, or clause. Undefined words retain their common dictionary meaning.

(b) *Delegation of authority.* Each authority is delegable unless specifically stated otherwise (see 1.102–4(b)).

(c) *Dollar thresholds.* Unless otherwise specified, a specific dollar threshold for the purpose of applicability is the final anticipated dollar value of the action, including the dollar value of all options. If the action establishes a maximum quantity of supplies or services to be acquired or establishes a ceiling price or establishes the final price to be based on future events, the final anticipated dollar value must be the highest final priced alternative to the Government, including the dollar value of all options.

(d) *Application of FAR changes to solicitations and contracts.* Unless otherwise specified—

(1) FAR changes apply to solicitations issued on or after the effective date of the change;

(2) Contracting officers may, at their discretion, include the FAR changes in solicitations issued before the effective date, provided award of the resulting contract(s) occurs on or after the effective date; and

(3) Contracting officers may, at their discretion, include the changes in any existing contract with appropriate consideration.

(e) *Citations.* When the FAR cites a statute, Executive order, Office of Management and Budget circular, Office of Federal Procurement Policy policy letter, or relevant portion of the Code of Federal Regulations, the citation includes all applicable amendments, unless otherwise stated.

(f) *Imperative sentences.* When an imperative sentence directs action, the contracting officer is responsible for the action, unless another party is expressly cited.

PART 52—SOLICITATION PROVISIONS AND CONTRACT CLAUSES

4. Amend section 52.101 in paragraph (a) by revising the definition ''Substantially as follows''; and by revising paragraph (d) to read as follows:

52.101 Using Part 52.

(a) * * *

Substantially as follows or *substantially the same as,* when used in the prescription of a provision or clause, means that authorization is granted to prepare and utilize a variation of that provision or clause to accommodate requirements that are peculiar to an individual acquisition. Any variation must include the salient features of the FAR provision or clause, and must be consistent with the intent, principle, and substance of the FAR provision or clause or related coverage of the subject matter.

* * * * *

(d) *Introductory text.* Within Subpart 52.2, the introductory text of each provision or clause includes a cross-reference to the location in the FAR subject text that prescribes its use.

* * * * *

5. Amend section 52.104 by revising paragraph (a) to read as follows:

52.104 Procedures for modifying and completing provisions and clauses.

(a) The contracting officer must not modify provisions and clauses unless the FAR authorizes their modification. For example—

(1) ''The contracting officer may use a period shorter than 60 days (but not less than 30 days) in paragraph (x) of the clause''; or

(2) ''The contracting officer may substitute the words 'task order' for the word 'Schedule' wherever that word appears in the clause.''

* * * * *

6. Amend section 52.105 by revising paragraph (a) to read as follows:

52.105 Procedures for using alternates.

(a) The FAR accommodates a major variation in a provision or clause by use of an alternate. The FAR prescribes alternates to a given provision or clause in the FAR subject text where the provision or clause is prescribed. The alternates to each provision or clause are titled ''Alternate I,'' ''Alternate II,'' ''Alternate III,'' etc.

* * * * *

7. Revise section 52.200 to read as follows:

52.200 Scope of subpart.

This subpart sets forth the text of all FAR provisions and clauses (see 52.101(b)(1)) and gives a cross-reference to the location in the FAR that prescribes the provision or clause.

[FR Doc. 00–13818 Filed 6–1–00; 3:59 pm]

BILLING CODE 6820–EP–P

DEPARTMENT OF DEFENSE

GENERAL SERVICES ADMINISTRATION

NATIONAL AERONAUTICS AND SPACE ADMINISTRATION

48 CFR Parts 2, 4, 7, 11, 13, 23, and 52

[FAC 97–18; FAR Case 1998–015 (98–015); Item III]

RIN 9000–AI49

Federal Acquisition Regulation; Requirements Supporting Procurement of Recycled Products and Environmentally Preferable Services

AGENCIES: Department of Defense (DoD), General Services Administration (GSA), and National Aeronautics and Space Administration (NASA).

ACTION: Final rule.

SUMMARY: The Civilian Agency Acquisition Council and the Defense Acquisition Regulations Council (Councils) have agreed on a final rule amending the Federal Acquisition Regulation (FAR) to implement Executive Order (E.O.) 13101, Greening the Government through Waste Prevention, Recycling, and Federal Acquisition, dated September 14, 1998.

DATES: *Effective Date*: August 7, 2000.

Applicability Date: The FAR, as amended by this rule, is applicable to solicitations issued on or after August 7, 2000.

FOR FURTHER INFORMATION CONTACT: The FAR Secretariat, Room 4035, GS Building, Washington, DC, 20405, (202) 501–4755, for information pertaining to status or publication schedules. For clarification of content, contact Mr. Paul Linfield, Procurement Analyst, at (202) 501–1757. Please cite FAC 97–18, FAR case 1998–015.

SUPPLEMENTARY INFORMATION:

A. Background

DoD, GSA, and NASA published a proposed rule in the **Federal Register** at 64 FR 51656, September 23, 1999. Seven respondents provided public comments. We considered all comments in finalizing the rule.

This rule amends the FAR to implement E.O. 13101. The rule amends guidance in FAR Subpart 7.1, 11.002(d), Subpart 23.4, Subpart 23.7, and the FAR clauses at 52.223–9 and 52.223–10 to conform with E.O. 13101 and the Resource Conservation and Recovery Act. The rule—

- Revises FAR Subpart 7.1 to ensure that requirements for printing and writing paper meet minimum content requirements specified in the E.O.;
- Revises Subpart 11.3 to add definitions and special requirements to implement E.O. requirements and Environmental Protection Agency (EPA) regulations governing acquisitions of printing and writing paper, and to clarify that contracting officers may include in solicitations additional information requirements when needed to determine if the offeror's product meets requirements for recycled content or related standards;
- Clarifies in Part 13 how the procurement requirements of the Resource Conservation and Recovery Act, 42 U.S.C. 6962, apply to micro-purchases and acquisitions that do not exceed $100,000; and
- Reorganizes and revises Subparts 23.4 and 23.7 and associated clauses.

This rule was not subject to Office of Management and Budget review under Section 6(b) of Executive Order 12866, Regulatory Planning and Review, dated September 30, 1993. This rule is not a major rule under 5 U.S.C. 804.

B. Regulatory Flexibility Act

The Regulatory Flexibility Act, 5 U.S.C. 601 *et seq.* applies to this final rule. Interested parties may obtain a copy of the a Final Regulatory Flexibility Analysis (FRFA) from the FAR Secretariat.

The Councils' prepared FRFA is summarized as follows:

The objective of the rule is to improve the Government's use of recycled products and environmentally preferable products and services. E.O. 13101 requires revision of the Federal Acquisition Regulation to prescribe policies for the acquisition and use of environmentally preferable products and services through procurement preference programs favoring the purchase of these products and services. The rule primarily affects the internal operating procedures of Government agencies. The provisions affecting small entities are the requirements at FAR 23.705, 52.223–9, and 52.223–10. These provisions of the rule will apply to all Government contractors, both large and small businesses.

The FAR Secretariat has submitted a copy of the FRFA to the Chief Counsel for Advocacy of the Small Business Administration.

C. Paperwork Reduction Act

The Paperwork Reduction Act (Pub. L. 104–13) applies because the final rule contains information collection requirements that have been approved by the Office of Management and Budget (OMB) under OMB Control Number 9000–0134. The final rule reduces the annual reporting burden for OMB Control Number 9000–0134 estimated at 32,175 hours. This estimate was based on 64,350 respondents and a preparation time estimated at .5 hour per response. In the proposed rule, we estimated that removal of the certification requirement would affect more than one-half of the respondents and reduce preparation time for those respondents by one-third. No comments were received on this estimate.

As a result, we estimate the revised annual reporting burden to be as follows:

Respondents: 64,350;

Responses per respondent: 1;

Total annual responses: 64,350;

Preparation hours per response: 25 minutes;

Total response burden hours: 26,800.

List of Subjects in 48 CFR Parts 2, 4, 7, 11, 13, 23, and 52

Government procurement.

Dated: May 26, 2000.

Edward C. Loeb,

Director, Federal Acquisition Policy Division.

Therefore, DoD, GSA, and NASA amend 48 CFR parts 2, 4, 7, 11, 13, 23, and 52 as set forth below:

1. The authority citation for 48 CFR parts 2, 4, 7, 11, 13, 23, and 52 continues to read as follows:

Authority: 40 U.S.C. 486(c); 10 U.S.C. chapter 137; and 42 U.S.C. 2473(c).

PART 2—DEFINITIONS OF WORDS AND TERMS

2. Amend section 2.101 by adding, in alphabetical order, the definitions ''Energy-efficient product'', ''Environmentally preferable'', ''Pollution prevention'', ''Recovered material'', ''Virgin material'', and ''Waste reduction'' to read as follows:

2.101 Definitions.

* * * * *

Energy-efficient product means a product in the upper 25 percent of efficiency for all similar products or, if there are applicable Federal appliance or equipment efficiency standards, a product that is at least 10 percent more efficient than the minimum Federal standard.

Environmentally preferable means products or services that have a lesser or reduced effect on human health and the environment when compared with competing products or services that serve the same purpose. This comparison may consider raw materials acquisition, production, manufacturing, packaging, distribution, reuse, operation, maintenance, or disposal of the product or service.

* * * * *

Pollution prevention means any practice that—

(a)(1) Reduces the amount of any hazardous substance, pollutant, or contaminant entering any waste stream or otherwise released into the environment (including fugitive emissions) prior to recycling, treatment, or disposal; and

(2) Reduces the hazards to public health and the environment associated with the release of such substances, pollutants, and contaminants;

(b) Reduces or eliminates the creation of pollutants through increased efficiency in the use of raw materials, energy, water, or other resources; or

(c) Protects natural resources by conservation.

* * * * *

Recovered material means waste materials and by-products recovered or diverted from solid waste, but the term does not include those materials and by-products generated from, and commonly reused within, an original manufacturing process. For use in Subpart 11.3 for paper and paper products, see the definition at 11.301.

* * * * *

Virgin material means—

(a) Previously unused raw material, including previously unused copper, aluminum, lead, zinc, iron, other metal or metal ore; or

(b) Any undeveloped resource that is, or with new technology will become, a source of raw materials.

Waste reduction means preventing or decreasing the amount of waste being generated through waste prevention, recycling, or purchasing recycled and environmentally preferable products.

PART 4—ADMINISTRATIVE MATTERS

4.301 [Removed]

4.302–4.304 [Redesignated as 4.301–4.303].

3. Amend Subpart 4.3 by removing section 4.301 and redesignating sections 4.302 through 4.304 as sections 4.301 through 4.303, respectively; and by revising the newly designated sections to read as follows:

Subpart 4.3—Paper Documents

* * * * *

4.301 Definition.

Printed or copied double-sided, as used in this subpart, means printing or reproducing a document so that information is on both sides of a sheet of paper.

4.302 Policy.

When electronic commerce methods (see 4.502) are not being used, a contractor should submit paper documents to the Government relating to an acquisition printed or copied double-sided on recycled paper whenever practicable. If the contractor cannot print or copy double-sided, it should print or copy single-sided on recycled paper.

4.303 Contract clause.

Insert the clause at 52.204–4, Printed or Copied Double-Sided on Recycled Paper, in solicitations and contracts that exceed the simplified acquisition threshold.

PART 7—ACQUISITION PLANNING

4. Amend section 7.103 by revising paragraph (n) to read as follows:

7.103 Agency-head responsibilities.

(n) Ensuring that agency planners—

(1) Specify needs for printing and writing paper consistent with the minimum content standards specified in section 505 of Executive Order 13101 of September 14, 1998, Greening the Government through Waste Prevention, Recycling, and Federal Acquisition (see 11.303); and

(2) Comply with the policy in 11.002(d) regarding procurement of products containing recovered materials, and environmentally preferable and energy-efficient products and services.

PART 11—DESCRIBING AGENCY NEEDS

11.001 [Amended]

5. Amend section 11.001 by removing the definitions ''Recovered material'' and ''Virgin material.''

6. Amend section 11.002 by revising paragraph (d) to read as follows:

11.002 Policy.

(d) The Resource Conservation and Recovery Act of 1976 (42 U.S.C. 6901, *et seq.*), Executive Order 12902 of March 8, 1994, Energy Efficiency and Water Conservation at Federal Facilities, and Executive Order 13101 of September 14, 1998, Greening the Government through Waste Prevention, Recycling, and Federal Acquisition, establish requirements for the procurement of products containing recovered

materials, and environmentally preferable and energy-efficient products and services. Executive agencies must consider use of recovered materials, environmentally preferable purchasing criteria developed by the EPA, and environmental objectives (see 23.703(b)) when—

(1) Developing, reviewing, or revising Federal and military specifications, product descriptions (including commercial item descriptions), and standards;

(2) Describing Government requirements for supplies and services; and

(3) Developing source selection factors.

7. Subpart 11.3, consisting of sections 11.301 and 11.302, is revised, and sections 11.303 and 11.304 are added to read as follows:

Subpart 11.3—Acceptable Material

11.301 Definitions.

As used in this subpart—

Postconsumer material means a material or finished product that has served its intended use and has been discarded for disposal or recovery, having completed its life as a consumer item. Postconsumer material is a part of the broader category of ''recovered material.'' For paper and paper products, postconsumer material means ''postconsumer fiber'' defined by the U.S. Environmental Protection Agency (EPA) as—

(1) Paper, paperboard, and fibrous materials from retail stores, office buildings, homes, and so forth, after they have passed through their end-usage as a consumer item, including: used corrugated boxes; old newspapers; old magazines; mixed waste paper; tabulating cards; and used cordage; or

(2) All paper, paperboard, and fibrous materials that enter and are collected from municipal solid waste; but not

(3) Fiber derived from printers' over-runs, converters' scrap, and over-issue publications.

Recovered material for paper and paper products, is defined by EPA in its Comprehensive Procurement Guideline as ''recovered fiber'' and means the following materials:

(1) Postconsumer fiber.

(2) Manufacturing wastes such as—

(i) Dry paper and paperboard waste generated after completion of the papermaking process (that is, those manufacturing operations up to and including the cutting and trimming of the paper machine reel into smaller rolls or rough sheets) including: envelope cuttings, bindery trimmings, and other paper and paperboard waste resulting from printing, cutting, forming, and other converting operations; bag, box, and carton manufacturing wastes; and butt rolls, mill wrappers, and rejected unused stock; and

(ii) Repulped finished paper and paperboard from obsolete inventories of paper and paperboard manufacturers, merchants, wholesalers, dealers, printers, converters, or others.

11.302 Policy.

(a) Agencies must not require virgin material or supplies composed of or manufactured using virgin material unless compelled by law or regulation or unless virgin material is vital for safety or meeting performance requirements of the contract.

(b)(1) When acquiring other than commercial items, agencies must require offerors to identify used, reconditioned, or remanufactured supplies; or unused former Government surplus property proposed for use under the contract. These supplies or property may not be used in contract performance unless authorized by the contracting officer.

(2) When acquiring commercial items, the contracting officer must consider the customary practices in the industry for the item being acquired. The contracting officer may require offerors to provide information on used, reconditioned, or remanufactured supplies, or unused former Government surplus property proposed for use under the contract. The request for the information must be included in the solicitation, and to the maximum extent practicable must be limited to information or standards consistent with normal commercial practices.

(c) When the contracting officer needs additional information to determine whether supplies meet minimum recovered material standards stated in the solicitation, the contracting officer may require offerors to submit additional information on the recycled content or related standards. The request for the information must be included in the solicitation. When acquiring commercial items, limit the information to the maximum extent practicable to that available under normal commercial practices.

11.303 Special requirements for printing and writing paper.

(a) Section 505 of Executive Order 13101, Greening the Government through Waste Prevention, Recycling, and Federal Acquisition, establishes minimum recovered material content standards for agency purchases of printing and writing paper. Section 505 requires that 100 percent of an agency's purchases of printing and writing paper must meet or exceed one of the minimum content standards specified in paragraph (b) of this section.

(b) For high-speed copier paper, offset paper, forms bond, computer printout paper, carbonless paper, file folders, white wove envelopes, writing and office paper, book paper, cotton fiber paper, and cover stock, the minimum content standard must be no less than 30 percent postconsumer materials. If paper containing 30 percent postconsumer material is not reasonably available, does not meet reasonable performance requirements, or is only available at an unreasonable price, then the agency must purchase paper containing no less than 20 percent postconsumer material.

11.304 Contract clause.

Insert the clause at 52.211–5, Material Requirements, in solicitations and contracts for supplies that are not commercial items.

PART 13—SIMPLIFIED ACQUISITION PROCEDURES

8. Amend section 13.005 by revising paragraph (a)(5) to read as follows:

13.005 Federal Acquisition Streamlining Act of 1994 list of inapplicable laws.

* * * * *

(a) * * *

(5) 42 U.S.C. 6962 (Solid Waste Disposal Act). (The requirement to provide an estimate of recovered material utilized in contract performance does not apply unless the contract value exceeds $100,000.)

* * * * *

9. Amend section 13.006 by revising paragraph (g) to read as follows:

13.006 Inapplicable provisions and clauses.

* * * * *

(g) 52.223–9, Estimate of Percentage of Recovered Material Content for EPA-Designated Products.

10. Amend section 13.201 by adding paragraph (f) to read as follows:

13.201 General.

* * * * *

(f) The procurement requirements in the Resource Conservation and Recovery Act (42 U.S.C. 6962) and Executive Order 13101 of September 14, 1998, Greening the Government through Waste Prevention, Recycling, and Federal Acquisition, apply to purchases at or below the micro-purchase threshold (see Subpart 23.4).

PART 23—ENVIRONMENT, CONSERVATION, OCCUPATIONAL SAFETY, AND DRUG-FREE WORKPLACE

11. Revise section 23.400 to read as follows:

23.400 Scope of subpart.

This subpart prescribes policies and procedures for acquiring Environmental Protection Agency (EPA)—designated products through affirmative procurement programs required by the Resource Conservation and Recovery Act of 1976 (RCRA) (42 U.S.C. 6962) and Executive Order 13101 of September 14, 1998, Greening the Government through Waste Prevention, Recycling, and Federal Acquisition.

23.401 and 23.402 [Redesignate as 23.402 and 23.401]

12. Redesignate sections 23.401 and 23.402 as 23.402 and 23.401, respectively.

13. Revise the newly designated sections 23.401 and 23.402 to read as follows:

23.401 Definition.

EPA-designated product, as used in this subpart, means a product—

(1) That is or can be made with recovered material;

(2) That is listed by EPA in a procurement guideline (40 CFR part 247); and

(3) For which EPA has provided purchasing recommendations in a related Recovered Materials Advisory Notice (RMAN).

23.402 Authorities.

(a) The Resource Conservation and Recovery Act of 1976 (RCRA), 42 U.S.C. 6962, requires agencies responsible for drafting or reviewing specifications used in agency acquisitions to—

(1) Eliminate from those specifications any requirement excluding the use of recovered materials or requiring products to be manufactured from virgin materials; and

(2) Require, for EPA-designated products, using recovered materials to the maximum extent practicable without jeopardizing the intended end use of the item.

(b) RCRA also requires—

(1) EPA to prepare guidelines on the availability, sources, and potential uses of recovered materials and associated products, including solid waste management services; and

(2) Agencies to develop and implement affirmative procurement programs for EPA-designated products within 1 year after EPA's designation.

(c) Executive Order 13101 requires that the agency head—

(1) Work to increase and expand markets for recovered materials through greater Government preference and demand for such products consistent with the demands of efficiency and cost-effectiveness; and

(2) Develop and implement affirmative procurement programs in accordance with direction in RCRA and the Executive order.

14. Revise section 23.403 to read as follows:

23.403 Policy.

Government policy on the use of recovered materials considers cost, availability of competition, and performance. The objective is to acquire competitively, in a cost-effective manner, products that meet reasonable performance requirements and that are composed of the highest percentage of recovered materials practicable.

23.404–23.405 [Redesignated as 23.405 and 23.406]

15. Redesignate sections 23.404 and 23.405 as 23.405 and 23.406, respectively; add a new section 23.404; and revise the redesignated sections to read as follows:

23.404 Agency affirmative procurement programs.

(a) For EPA-designated products, an agency must establish an affirmative procurement program, if the agency's purchases meet the threshold in 23.405(a). Technical or requirements personnel and procurement personnel are responsible for the preparation, implementation, and monitoring of affirmative procurement programs. Agency affirmative procurement programs must include—

(1) A recovered materials preference program;

(2) An agency promotion program;

(3) A program for requiring reasonable estimates, certification, and verification of recovered material used in the performance of contracts; and

(4) Annual review and monitoring of the effectiveness of the program.

(b) Agency affirmative procurement programs must require that 100 percent of purchases of EPA-designated products contain recovered material, unless the item cannot be acquired—

(1) Competitively within a reasonable time frame;

(2) Meeting appropriate performance standards; or

(3) At a reasonable price.

(c) Agency affirmative procurement programs must provide guidance for purchases of EPA-designated products at or below the micro-purchase threshold.

23.405 Procedures.

(a) These procedures apply to all agency acquisitions of EPA-designated products, including micro-purchases, if—

(1) The price of the product exceeds $10,000; or

(2) The aggregate amount paid for products, or for functionally equivalent products, in the preceding fiscal year was $10,000 or more. RCRA requires that an agency include micro-purchases in determining if the aggregate amount paid was $10,000 or more. However, it is not recommended that an agency track micro-purchases unless it intends to claim an exemption from the requirement to establish an affirmative procurement program in the following fiscal year.

(b) Contracting officers should refer to EPA's list of EPA-designated products (available via the Internet at *http://www.epa.gov/cpg/*) and to their agencies' affirmative procurement programs when purchasing supplies that contain recovered material or services that could include supplies that contain recovered material.

(c) The contracting officer must place in the contract file a written justification if an acquisition of EPA-designated products above the micro-purchase threshold does not contain recovered material. If the agency has designated an Environmental Executive, the contracting officer must give a copy of the written justification to that official. The contracting officer must base the justification on the inability to acquire the product—

(1) Competitively within a reasonable period of time;

(2) At reasonable prices; or

(3) To reasonable performance standards in the specifications, provided a written determination by technical or requirements personnel of the performance standard's reasonableness is included with the justification. The technical and requirements personnel must base their determination on National Institute of Standards and Technology guidelines, if available.

(d) Agencies must establish procedures for consolidating and reporting contractor estimates required by the clause at 52.223–9, Estimate of Percentage of Recovered Material Content for EPA-Designated Products.

23.406 Solicitation provision and contract clause.

(a) Insert the provision at 52.223–4, Recovered Material Certification, in

solicitations that are for, or specify the use of, recovered materials.

(b) Insert the clause at 52.223–9, Estimate of Percentage of Recovered Material Content for EPA-Designated Products, in solicitations and contracts exceeding $100,000 that include the provision at 52.223–4. If technical personnel advise that estimates can be verified, use the clause with its Alternate I.

16. Redesignate section 23.701 as 23.700 and revise the section heading; and add a new 23.701 to read as follows:

23.700 Scope.

* * * * *

23.701 Definition.

Biobased product, as used in this subpart, means a commercial or industrial product (other than food or feed) that utilizes biological products or renewable domestic agricultural (plant, animal, and marine) or forestry materials.

17. Amend section 23.702 by removing paragraph (d); redesignate paragraphs (e) and (f) as (d) and (e) and revise; and add a new paragraph (f) to read as follows:

23.702 Authorities.

* * * * *

(d) Executive Order 12856, of August 3, 1993, Federal Compliance with Right-to-Know Laws and Pollution Prevention Requirements.

(e) Executive Order 12902, of March 8, 1994, Energy Efficiency and Water Conservation at Federal Facilities.

(f) Executive Order 13101 of September 14, 1998, Greening the Government through Waste Prevention, Recycling, and Federal Acquisition.

23.703 [Removed]

23.704–23.706 [Redesignated as 23.703–23.705]

18. Remove section 23.703 and redesignate sections 23.704 through 23.706 as 23.703 through 23.705, respectively.

19. Revise the newly designated sections 23.703 through 23.705 to read as follows:

23.703 Policy.

Agencies must—

(a) Implement cost-effective contracting preference programs favoring the acquisition of environmentally preferable and energy-efficient products and services; and

(b) Employ acquisition strategies that affirmatively implement the following environmental objectives:

(1) Maximize the utilization of environmentally preferable products and services (based on EPA-issued guidance).

(2) Maximize the utilization of energy-efficient products.

(3) Eliminate or reduce the generation of hazardous waste and the need for special material processing (including special handling, storage, treatment, and disposal).

(4) Promote the use of nonhazardous and recovered materials.

(5) Realize life-cycle cost savings.

(6) Promote cost-effective waste reduction when creating plans, drawings, specifications, standards, and other product descriptions authorizing material substitutions, extensions of shelf-life, and process improvements.

(7) Consider the use of biobased products.

23.704 Application to Government-owned or -leased facilities.

Executive Order 13101, Section 701, requires that contracts for contractor operation of a Government-owned or -leased facility and contracts for support services at a Government-owned or -operated facility include provisions that obligate the contractor to comply with the requirements of the order. Compliance includes developing programs to promote and implement cost-effective waste reduction and affirmative procurement programs required by 42 U.S.C. 6962 for all products designated in EPA's Comprehensive Procurement Guideline (40 CFR part 247).

23.705 Contract clause.

Insert the clause at 52.223–10, Waste Reduction Program, in all solicitations and contracts for contractor operation of Government-owned or -leased facilities and all solicitations and contracts for support services at Government-owned or -operated facilities.

PART 52—SOLICITATION PROVISIONS AND CONTRACT CLAUSES

20. Revise the section heading and text of 52.204–4 to read as follows:

52.204–4 Printed or Copied Double-Sided on Recycled Paper.

As prescribed in 4.303, insert the following clause:

Printed or Copied Double-Sided on Recycled Paper (August 2000)

(a) *Definitions.* As used in this clause—

Postconsumer material means a material or finished product that has served its intended use and has been discarded for disposal or recovery, having completed its life as a consumer item. Postconsumer material is a part of the broader category of ''recovered material.'' For paper and paper products, postconsumer material means ''postconsumer fiber'' defined by the U.S. Environmental Protection Agency (EPA) as—

(1) Paper, paperboard, and fibrous materials from retail stores, office buildings, homes, and so forth, after they have passed through their end-usage as a consumer item, including: used corrugated boxes; old newspapers; old magazines; mixed waste paper; tabulating cards; and used cordage; or

(2) All paper, paperboard, and fibrous materials that enter and are collected from municipal solid waste; but not

(3) Fiber derived from printers' over-runs, converters' scrap, and over-issue publications.

Printed or copied double-sided means printing or reproducing a document so that information is on both sides of a sheet of paper.

Recovered material, for paper and paper products, is defined by EPA in its Comprehensive Procurement Guideline as ''recovered fiber'' and means the following materials:

(1) Postconsumer fiber; and

(2) Manufacturing wastes such as—

(i) Dry paper and paperboard waste generated after completion of the papermaking process (that is, those manufacturing operations up to and including the cutting and trimming of the paper machine reel into smaller rolls or rough sheets) including: envelope cuttings, bindery trimmings, and other paper and paperboard waste resulting from printing, cutting, forming, and other converting operations; bag, box, and carton manufacturing wastes; and butt rolls, mill wrappers, and rejected unused stock; and

(ii) Repulped finished paper and paperboard from obsolete inventories of paper and paperboard manufacturers, merchants, wholesalers, dealers, printers, converters, or others.

(b) In accordance with Section 101 of Executive Order 13101 of September 14, 1998, Greening the Government through Waste Prevention, Recycling, and Federal Acquisition, the Contractor is encouraged to submit paper documents, such as offers, letters, or reports, that are printed or copied double-sided on recycled paper that meet minimum content standards specified in Section 505 of Executive Order 13101, when not using electronic commerce methods to submit information or data to the Government.

(c) If the Contractor cannot purchase high-speed copier paper, offset paper, forms bond, computer printout paper, carbonless paper, file folders, white wove envelopes, writing and office paper, book paper, cotton fiber paper, and cover stock meeting the 30 percent postconsumer material standard for use in submitting paper documents to the Government, it should use paper containing no less than 20 percent postconsumer material. This lesser standard should be used only when paper meeting the 30 percent postconsumer material standard is not obtainable at a reasonable price or does not meet reasonable performance standards. (End of clause)

21. Amend section 52.211–5 by revising the introductory text, the date of the clause, the definitions ''Recovered

material'' and ''Virgin material'', and paragraphs (b) and (e) to read as follows:

52.211–5 Material Requirements.

As prescribed in 11.304, insert the following clause:

MATERIAL REQUIREMENTS (August 2000)

(a) * * *

* * * * *

Recovered material means waste materials and by-products recovered or diverted from solid waste, but the term does not include those materials and by-products generated from, and commonly reused within, an original manufacturing process.

* * * * *

Virgin material means—

(1) Previously unused raw material, including previously unused copper, aluminum, lead, zinc, iron, other metal or metal ore; or

(2) Any undeveloped resource that is, or with new technology will become, a source of raw materials.

(b) Unless this contract otherwise requires virgin material or supplies composed of or manufactured from virgin material, the Contractor shall provide supplies that are new, reconditioned, or remanufactured, as defined in this clause.

* * * * *

(e) Used, reconditioned, or remanufactured supplies, or unused former Government surplus property, may be used in contract performance if the Contractor has proposed the use of such supplies, and the Contracting Officer has authorized their use.

(End of clause)

22. Amend section 52.212–5 by revising the date of the clause; by redesignating paragraphs (b)(16) through (b)(26) as (b)(17) through (b)(27), respectively; and by adding a new paragraph (b)(16) to read as follows:

52.212–5 Contract Terms and Conditions Required to Implement Statutes or Executive Orders—Commercial Items.

* * * * *

Contract Terms and Conditions Required to Implement Statutes or Executive Orders—Commercial Items (August 2000)

* * * * *

(b) * * *

(16)(i) 52.223–9, Estimate of Percentage of Recovered Material Content for EPA-Designated Products (42 U.S.C. 6962(c)(3)(A)(ii)).

(ii) Alternate I of 52.223–9 (42 U.S.C. 6962(i)(2)(C)).

* * * * *

52.223–4 [Amended]

23. Amend the introductory text of section 52.223–4 by revising the citation ''23.405(a)'' to read ''23.406(a)''.

24. Revise the section heading and text of 52.223–9 to read as follows:

52.223–9 Estimate of Percentage of Recovered Material Content for EPA-Designated Products.

As prescribed in 23.406(b), insert the following clause:

Estimate of Percentage of Recovered Material Content for EPA-Designated Products (August 2000)

(a) *Definitions.* As used in this clause—

Postconsumer material means a material or finished product that has served its intended use and has been discarded for disposal or recovery, having completed its life as a consumer item. Postconsumer material is a part of the broader category of ''recovered material.''

Recovered material means waste materials and by-products recovered or diverted from solid waste, but the term does not include those materials and by-products generated from, and commonly reused within, an original manufacturing process.

(b) The Contractor, on completion of this contract, shall—

(1) Estimate the percentage of the total recovered material used in contract performance, including, if applicable, the percentage of postconsumer material content; and

(2) Submit this estimate to [*Contracting Officer complete in accordance with agency procedures*].

(End of clause)

Alternate I (August 2000). As prescribed in 23.406(b), redesignate paragraph (b) of the basic clause as paragraph (c) and add the following paragraph (b) to the basic clause:

(b) The Contractor shall execute the following certification required by the Resource Conservation and Recovery Act of 1976 (42 U.S.C. 6962(i)(2)(C)):

Certification

I, (name of certifier), am an officer or employee responsible for the performance of this contract and hereby certify that the percentage of recovered material content for EPA-designated products met the applicable contract specifications.

(*Signature of the Officer or Employee*)

(*Typed Name of the Officer or Employee*)

(*Title*)

(*Name of Company, Firm, or Organization*)

(*Date*)

(End of certification)

25. Revise section 52.223–10 to read as follows:

52.223–10 Waste Reduction Program.

As prescribed in 23.705, insert the following clause:

Waste Reduction Program (August 2000)

(a) *Definitions.* As used in this clause—

Recycling means the series of activities, including collection, separation, and processing, by which products or other materials are recovered from the solid waste stream for use in the form of raw materials in the manufacture of products other than fuel for producing heat or power by combustion.

Waste prevention means any change in the design, manufacturing, purchase, or use of materials or products (including packaging) to reduce their amount or toxicity before they are discarded. Waste prevention also refers to the reuse of products or materials.

Waste reduction means preventing or decreasing the amount of waste being generated through waste prevention, recycling, or purchasing recycled and environmentally preferable products.

(b) Consistent with the requirements of Section 701 of Executive Order 13101, the Contractor shall establish a program to promote cost-effective waste reduction in all operations and facilities covered by this contract. The Contractor's programs shall comply with applicable Federal, State, and local requirements, specifically including Section 6002 of the Resource Conservation and Recovery Act (42 U.S.C. 6962, *et seq.*) and implementing regulations (40 CFR part 247).

(End of clause)

[FR Doc. 00–13819 Filed 6–1–00; 3:59 pm]

BILLING CODE 6820–EP–P

DEPARTMENT OF DEFENSE

GENERAL SERVICES ADMINISTRATION

NATIONAL AERONAUTICS AND SPACE ADMINISTRATION

48 CFR Part 4

[FAC 97–18; FAR Case 1999–615; Item IV]

RIN 9000–AI77

Federal Acquisition Regulation; General Records Schedules

AGENCIES: Department of Defense (DoD), General Services Administration (GSA), and National Aeronautics and Space Administration (NASA).

ACTION: Final rule.

SUMMARY: The Civilian Agency Acquisition Council and the Defense Acquisition Regulations Council (Councils) have agreed on a final rule amending the Federal Acquisition Regulation (FAR) to implement the revised National Archives and Records Administration General Records Schedule 3, Procurement, Supply, and Grants Records (NARA Schedule 3), dated December 15, 1998.

DATES: *Effective Date:* August 7, 2000.

Applicability Date: The FAR, as amended by this rule, is applicable to solicitations issued on or after August 7, 2000.

FOR FURTHER INFORMATION CONTACT: The FAR Secretariat, Room 4035, GS

Building, Washington, DC, 20405, (202) 501–4755, for information pertaining to status or publication schedules. For clarification of content, contact Ms. Linda K. Nelson, Procurement Analyst, at (202) 501–1900. Please cite FAC 97–18, FAR case 1999–615.

SUPPLEMENTARY INFORMATION:

A. Background

The intent of the update was to align the FAR text with the revised NARA Schedule 3.

The rule—

- Amends FAR 4.705–2 and revises 4.805 to align the text with the new NARA Schedule 3;
- Revises and rearranges the table at FAR 4.805(b) to group similar types of contract instruments together (*e.g.*, construction contracts and related case files, and unsuccessful offers and proposals); and
- Reorganizes and revises the FAR text for ease of use. The rule is written using plain language in accordance with the White House memorandum, Plain Language in Government Writing, dated June 1, 1999.

This rule was not subject to Office of Management and Budget review under Section 6(b) of Executive Order 12866, Regulatory Planning and Review, dated September 30, 1993. This rule is not a major rule under 5 U.S.C. 804.

B. Regulatory Flexibility Act

The final rule does not constitute a significant FAR revision within the meaning of FAR 1.501 and Public Law 98–577, and publication for public comments is not required. However, the Councils will consider comments from small entities concerning the affected FAR subpart in accordance with 5 U.S.C. 610. Interested parties must submit such comments separately and should cite 5 U.S.C. 601, *et seq.* (FAC 97–18, FAR case 1999–615), in correspondence.

C. Paperwork Reduction Act

The Paperwork Reduction Act does not apply because the changes to the FAR do not impose information collection requirements that require the approval of the Office of Management and Budget under 44 U.S.C. 3501, *et seq.*

List of Subjects in 48 CFR Part 4

Government procurement.

Dated: May 26, 2000.

Edward C. Loeb,

Director, Federal Acquisition Policy Division.

Therefore, DoD, GSA, and NASA amend 48 CFR part 4 as set forth below:

PART 4—ADMINISTRATIVE MATTERS

1. The authority citation for 48 CFR part 4 continues to read as follows:

Authority: 40 U.S.C. 486(c); 10 U.S.C. chapter 137; and 42 U.S.C. 2473(c).

2. Amend section 4.705–2 by revising the section heading and paragraph (a) to read as follows:

4.705–2 Construction contracts pay administration records.

(a) Payroll sheets, registers, or their equivalent, of salaries and wages paid to individual employees for each payroll period; change slips; and tax withholding statements: Retain 3 years after completion of contract, unless contract performance is the subject of enforcement action.

* * * * *

3. Revise section 4.800 to read as follows:

4.800 Scope of subpart.

This subpart prescribes requirements for establishing, maintaining, and disposing of contract files.

4. Revise section 4.805 to read as follows:

4.805 Storage, handling, and disposal of contract files.

(a) Agencies must prescribe procedures for the handling, storing, and disposing of contract files. These procedures must take into account documents held in all types of media, including microfilm and various electronic media. Agencies may change the original medium to facilitate storage as long as the requirements of Part 4, law, and other regulations are satisfied. The process used to create and store records must record and reproduce the original document, including signatures and other written and graphic images completely, accurately, and clearly. Data transfer, storage, and retrieval procedures must protect the original data from alteration. Unless law or other regulations require signed originals to be kept, they may be destroyed after the responsible agency official verifies that record copies on alternate media and copies reproduced from the record copy are accurate, complete, and clear representations of the originals. Agency procedures for contract file disposal must include provisions that the documents specified in paragraph (b) of this section may not be destroyed before the times indicated, and may be retained longer if the responsible agency official determines that the files have future value to the Government. When original documents have been converted to alternate media for storage, the requirements in paragraph (b) of this section also apply to the record copies in the alternate media.

(b) If administrative records are mixed with program records and cannot be economically segregated, the entire file should be kept for the period of time approved for the program records. Similarly, if documents described in the following table are part of a subject or case file that documents activities that are not described in the table, they should be treated in the same manner as the files of which they are a part. The retention periods for acquisitions at or below the simplified acquisition threshold also apply to acquisitions conducted prior to July 3, 1995, that used small purchase procedures. The retention periods for acquisitions above the simplified acquisition threshold also apply to acquisitions conducted prior to July 3, 1995, that used other than small purchase procedures.

Document	Retention period
(1) Records pertaining to Contract Disputes Act actions.	6 years and 3 months after final action or decision for files created prior to October 1, 1979. 1 year after final action or decision for files created on or after October 1, 1979.
(2) Contracts (and related records or documents, including successful proposals) exceeding the simplified acquisition threshold for other than construction.	6 years and 3 months after final payment.
(3) Contracts (and related records or documents, including successful proposals) at or below the simplified acquisition threshold for other than construction.	3 years after final payment.
(4) Construction contracts:	
(i) Above $2,000	6 years and 3 months after final payment.
(ii) $2,000 or less	3 years after final payment.

Document	Retention period
(iii) Related records or documents, including successful proposals, except for contractor's payrolls (see (b)(4)(iv)).	Same as contract file.
(iv) Contractor's payrolls submitted in accordance with Department of Labor regulations, with related certifications, anti-kickback affidavits, and other related papers.	3 years after contract completion unless contract performance is the subject of an enforcement action on that date.
(5) Solicited and unsolicited unsuccessful offers, quotations, bids, and proposals: (i) Relating to contracts above the simplified acquisition threshold.	If filed separately from contract file, until contract is completed. Otherwise, the same as related contract file.
(ii) Relating to contracts at or below the simplified acquisition threshold.	1 year after date of award or until final payment, whichever is later.
(6) Files for canceled solicitations.	5 years after cancellation.
(7) Other copies of procurement file records used by component elements of a contracting office for administrative purposes.	Upon termination or completion.
(8) Documents pertaining generally to the contractor as described at 4.801(c)(3).	Until superseded or obsolete.
(9) Data submitted to the Federal Procurement Data System (FPDS). Electronic data file maintained by fiscal year, containing unclassified records of all procurements other than simplified acquisitions, and information required under 4.601.	5 years after submittal to FPDS.
(10) Investigations, cases pending or in litigation (including protests), or similar matters.	Until final clearance or settlement, or, if related to a document identified in (b)(1)–(9), for the retention period specified for the related document, whichever is later.

[FR Doc. 00–13820 Filed 6–1–00; 4:00 pm]

BILLING CODE 6820–EP–P

DEPARTMENT OF DEFENSE

GENERAL SERVICES ADMINISTRATION

NATIONAL AERONAUTICS AND SPACE ADMINISTRATION

48 CFR Parts 8 and 38

[FAC 97–18; FAR Case 1998–609 (98–609); Item V]

RIN 9000–AI48

Federal Acquisition Regulation; Federal Supply Schedules Small Business Opportunities

AGENCIES: Department of Defense (DoD), General Services Administration (GSA), and National Aeronautics and Space Administration (NASA).

ACTION: Final rule.

SUMMARY: The Civilian Agency Acquisition Council and the Defense Acquisition Regulations Council (Councils) have agreed on a final rule amending the Federal Acquisition Regulation (FAR) to enhance the participation of small business concerns under the Federal Supply Schedules (FSS) program.

DATES: *Effective Date:* August 7, 2000.

Applicability Date: The FAR, as amended by this rule, is applicable to solicitations issued on or after August 7, 2000.

FOR FURTHER INFORMATION CONTACT: The FAR Secretariat, Room 4035, GS Building, Washington, DC, 20405, (202) 501–4755, for information pertaining to status or publication schedules. For clarification of content, contact Ms. Linda Nelson, Procurement Analyst, at (202) 501–1900. Please cite FAC 97–18, FAR case 1998–609.

SUPPLEMENTARY INFORMATION:

A. Background

The rule—

• Amends FAR subpart 8.4 to encourage ordering offices to consider the availability of small business concerns under the schedule and encourages ordering offices to consider small businesses when conducting evaluations before placing an order;

• Amends FAR Part 38 to reaffirm that the General Services Administration and agencies delegated the authority to establish a Federal Supply Schedule must comply with all statutory and regulatory requirements before a solicitation is issued; and

• Revises the FSS guidance in accordance with the plain language guidelines in a White House memorandum, Plain Language in Government Writing, dated June 1, 1998.

DoD, GSA, and NASA published a proposed rule in the **Federal Register** on September 14, 1999 (64 FR 49948). Thirty-two respondents submitted public comments. We considered all comments and converted the proposed rule to a final rule with minor changes.

This rule was not subject to Office of Management and Budget review under Section 6(b) of Executive Order 12866, Regulatory Planning and Review, dated September 30, 1993. This rule is not a major rule under 5 U.S.C. 804.

B. Regulatory Flexibility Act

The Councils prepared a Final Regulatory Flexibility Analysis (FRFA) consistent with 5 U.S.C. 604. Because this rule may impact small businesses, we are providing the FRFA in its entirety as follows:

This Final Regulatory Flexibility Analysis has been prepared consistent with the criteria stated in 5 U.S.C. 604.

1. *Statement of need for, and objectives of, the rule.*

The purpose of this rule is to promote the growth of Federal procurement sales opportunities for small business concerns under the Federal Supply Schedules. The rule amends FAR Subparts 8.4 and 38.1 to encourage ordering offices to consider small business concerns, if available, when conducting evaluations before placing an order. The rule also recognizes the recent change made by the Small Business Administration requiring inclusion of Federal Supply Schedule orders in agencies' small business goals. Effective fiscal year 1999, agencies must include the dollar value of orders expected to be placed against the General Services Administration's (GSA) Federal Supply Service (FSS) Schedules and report accomplishments against those goals.

2. *Summary of significant issues raised by the public comments in response to the Initial Regulatory Flexibility Analysis (IRFA), a summary of the assessment of the agency of such issues, and a statement of any changes made in the proposed rule as a result of such comments.*

We received one public comment that specifically addressed the Initial Regulatory Flexibility Analysis. The public comment expressed concerns that the data presented

did not adequately detail the impact the rule will have on small business concerns. Specifically, the respondent stated that although well represented in the Federal Supply Schedule program, small Federal Supply Schedule contractors cannot adequately compete with large Federal Supply Schedule contractors. In response, it is important to note that while sales under the program have increased to large businesses, sales to small businesses have increased as well. The Federal Supply Schedule program recognizes that in certain instances small business may not have the capability to meet some requirements of Federal agencies. However, the program permits schedule contractors to team with other schedule contractors to provide a solution to meet agency needs. A team can be any combination of large and small businesses. Therefore, small businesses can compete against large businesses by forming teams that can provide supplies and services tailored to address agency needs. The Federal Supply Schedules program is one of the most successful Government procurement programs; a program where small businesses can experience continuous growth.

We did not change the rule as a result of the comment. The rule encourages ordering offices to consider the availability of small business concerns under the schedule when conducting evaluations before placing an order. The preference for awarding an order to a small business ''when two or more items at the same delivered price'' will continue to apply. This final rule is intended to be beneficial by expanding small business consideration under Federal Supply Schedule orders.

3. *Description of, and an estimate of the number of, small entities to which the rule will apply or an explanation of why no such estimate is available.*

This rule will apply to all small business concerns under the Federal Supply Schedules program. Although the rule pertains to internal Government procedures, it is intended to increase the number of orders for supplies and services placed by the Government with small business concerns. Based on ''Small Business 'Vital Statistics''' found on SBA's homepage (*www.sba.gov/aboutsba/*), SBA estimated that there are approximately 23 million small businesses in the United States that provide 47 percent of all sales in the country. Clearly, not all of the businesses that are considered small seek to participate in the Federal Supply Schedules program. However, according to fiscal year 1999 statistical data maintained by GSA's Federal Supply Service, small business concerns hold 5,705 national scope schedule contracts out of a total population of 7,431 national scope schedule contracts. Thus, approximately 77 percent of the schedule contractors are small business concerns. In fiscal year 1999, small business schedule contractors received approximately $3.2 billion or 31 percent of total schedule sales. This exceeds the current Governmentwide small business goal. During fiscal year 1998, 4,900 small businesses held contracts out of a total of 7,000 national scope schedule contracts. Small business sales in 1998 were $2.5 billion or 33 percent of total schedule sales. Between fiscal year 1998 and fiscal year 1999, the number of small businesses holding FSS contracts increased 6 percent and small business sales increased 28 percent. The increased sales to small businesses total almost ¾ of a billion dollars. SBA reports that in 1998 the small business share of all Federal prime contract dollars dropped to 20.6 percent. Clearly, small businesses are receiving a greater market share under the schedules.

The General Services Administration (GSA) has radically restructured the schedules program over the past 4 years. GSA has streamlined both contracting and ordering processes for industry and for Government users of the program. The changes made to the program over the last 4 years provide small business vendors easy access to the Federal community and provide users with streamlined procedures. The procedures give small business contractors the opportunity to fairly compete within the broader universe of schedule contractors. These changes ensure that ordering activities have the broad discretion, and effective and flexible business solutions, to meet agency requirements. The rule also supports continued increases in small business sales.

4. *Description of the projected reporting, recordkeeping, and other compliance requirements of the rule, including an estimate of the classes of small entities which will be subject to the requirement and the type of professional skills necessary for preparation of the report or record.*

There are no projected reporting, recordkeeping, or other compliance requirements.

5. *Description of the steps the agency has taken to minimize the significant economic impact on small entities consistent with the stated objectives of applicable statutes, including a statement of the factual, policy, and legal reasons for selecting the alternative adopted in the final rule and why each one of the other significant alternatives to the rule considered by the agency which affect the impact on small entities was rejected.*

We considered various alternative approaches, as well as the adverse and beneficial impacts upon large businesses, small business, and the Government. One alternative that we considered was to apply small business set-asides to the FSS ordering process, including mandatory application of the rule of two for orders at certain dollar thresholds. Another alternative we considered was to allow agencies, at their discretion, to limit consideration of schedule orders to small business concerns. A third alternative we considered was to set-aside a significant number of Federal Supply Schedules for small businesses by applying the rule of two. However, contracting officers under the FSS program already issue solicitations that comply with the requirements of FAR Parts 5, 6, and 19. Determinations regarding small business set-asides are made during acquisition planning and solicitation preparation. All schedule solicitations must be reviewed by the Small Business Administration Procurement Center Representative (PCR) before issuance. For the reasons provided, we considered these alternatives inappropriate for adoption.

We determined that the alternatives offered by respondents to the proposed rule would be detrimental to the effectiveness and flexibility of the schedules program. We are converting the proposed rule to a final rule because it enhances the participation of small business in the Federal Supply Schedules program and provides a mechanism to increase the sales to small business under the FSS program.

The rule encourages ordering offices to consider the availability of small business concerns under the schedule and when conducting evaluations before placing an order. We expect sales to small businesses under the Federal Supply Schedules to increase because agencies are encouraged to include small business when conducting evaluations for an order and because agencies may credit small business schedule orders towards agency small business goals. The rule also ensures that all sectors of the economy may participate in the Federal Supply Schedules program. After we publish the final rule, we will track sales to verify if this rule has a positive impact on small business.

The FAR Secretariat has submitted a copy of the FRFA to the Chief Counsel for Advocacy of the Small Business Administration.

C. Paperwork Reduction Act

The Paperwork Reduction Act does not apply because the changes to the FAR do not impose information collection requirements that require the approval of the Office of Management and Budget under 44 U.S.C. 3501, *et seq.*

List of Subjects in 48 CFR parts 8 and 38

Government procurement.

Dated: May 26, 2000.

Edward C. Loeb,

Director, Federal Acquisition Policy Division.

Therefore, DoD, GSA, and NASA amend 48 CFR parts 8 and 38 as set forth below:

1. The authority citation for 48 CFR parts 8 and 38 continues to read as follows:

Authority: 40 U.S.C. 486(c); 10 U.S.C. chapter 137; and 42 U.S.C. 2473(c).

PART 8—REQUIRED SOURCES OF SUPPLIES AND SERVICES

2. Revise section 8.402 to read as follows:

8.402 Applicability.

Procedures in this subpart apply to orders placed against Federal Supply Schedules. Occasionally, GSA may establish special ordering procedures. The affected Federal Supply Schedules will outline these procedures.

3. In section 8.404—

a. Revise paragraph (a);

b. Remove from paragraph (b)(1) ''Ordering Offices can place'' and add ''Place'' in its place;

c. Revise the introductory text of paragraph (b)(2);

d. Revise paragraph (b)(2)(i);

e. Remove from the last sentence of the introductory text of paragraph (b)(3) '', ordering offices shall'';

f. Revise paragraph (b)(3)(i);

g. Revise the first sentence in paragraph (b)(3)(iii); and

h. Revise paragraphs (b)(4), (b)(5), and (b)(6) to read as follows:

8.404 Using schedules.

(a) *General.* Parts 13 and 19 do not apply to orders placed against Federal Supply Schedules, except for the provision at 13.303–2(c)(3). Orders placed against a Multiple Award Schedule (MAS), using the procedures in this subpart, are considered to be issued using full and open competition (see 6.102(d)(3)). Therefore, ordering offices need not seek further competition, synopsize the requirement, make a separate determination of fair and reasonable pricing, or consider small business programs. GSA has already determined the prices of items under schedule contracts to be fair and reasonable. By placing an order against a schedule using the procedures in this section, the ordering office has concluded that the order represents the best value and results in the lowest overall cost alternative (considering price, special features, administrative costs, etc.) to meet the Government's needs.

(b) * * *

(2) *Orders exceeding the micro-purchase threshold but not exceeding the maximum order threshold.* Place orders with the schedule contractor that can provide the supply or service that represents the best value. Before placing an order, consider reasonably available information about the supply or service offered under MAS contracts by using the ''GSA Advantage!'' on-line shopping service, or by reviewing the catalogs or pricelists of at least three schedule contractors (see 8.404(b)(6)). Select the delivery and other options available under the schedule that meet the agency's needs. When selecting the supply or service representing the best value, the ordering office may consider—

(i) Special features of the supply or service required for effective program performance;

* * * * *

(3) * * *

(i) Review additional schedule contractors' catalogs or pricelists, or use the ''GSA Advantage!'' on-line shopping service;

* * * * *

(iii) After seeking price reductions, place the order with the schedule contractor that provides the best value and results in the lowest overall cost alternative (see 8.404(a)). * * *

(4) *Blanket purchase agreements (BPAs).* Agencies may establish BPAs (see 13.303–2(c)(3)) when following the ordering procedures in this subpart. All schedule contracts contain BPA provisions. Ordering offices may use BPAs to establish accounts with contractors to fill recurring requirements. BPAs should address ordering frequency, invoicing, discounts, and delivery locations and times.

(5) *Price reductions.* In addition to the circumstances in paragraph (b)(3) of this section, there may be other reasons to request a price reduction. For example, seek a price reduction when the supply or service is available elsewhere at a lower price or when establishing a BPA to fill recurring requirements. The potential volume of orders under BPAs, regardless of the size of the individual order, offer the opportunity to secure greater discounts. Schedule contractors are not required to pass on to all schedule users a price reduction extended only to an individual agency for a specific order.

(6) *Small business.* When conducting evaluations and before placing an order, consider including, if available, one or more small, women-owned small, and/or small disadvantaged business schedule contractor(s). Orders placed against the schedules may be credited toward the ordering agency's small business goals. For orders exceeding the micro-purchase threshold, ordering offices should give preference to the items of small business concerns when two or more items at the same delivered price will satisfy the requirement.

* * * * *

PART 38—FEDERAL SUPPLY SCHEDULE CONTRACTING

4. Revise section 38.101 to read as follows:

38.101 General.

(a) The Federal Supply Schedule program, pursuant to 41 U.S.C. 259(b)(3)(A), provides Federal agencies with a simplified process of acquiring commonly used supplies and services in varying quantities while obtaining volume discounts. Indefinite-delivery contracts (including requirements contracts) are awarded using competitive procedures to commercial firms. The firms provide supplies and services at stated prices for given periods of time, for delivery within a stated geographic area such as the 48 contiguous states, the District of Columbia, Alaska, Hawaii, and overseas. The schedule contracting office issues Federal Supply Schedules that contain information needed for placing orders.

(b) Each schedule identifies agencies that are required to use the contracts as primary sources of supply.

(c) Federal agencies not identified in the schedules as mandatory users may issue orders under the schedules. Contractors are encouraged to accept the orders.

(d) Although GSA awards most Federal Supply Schedule contracts, it may authorize other agencies to award schedule contracts and publish schedules. For example, the Department of Veterans Affairs awards schedule contracts for certain medical and nonperishable subsistence items.

(e) When establishing Federal Supply Schedules, GSA, or an agency delegated that authority, is responsible for complying with all applicable statutory and regulatory requirements (*e.g.*, Parts 5, 6, and 19). The requirements of Parts 5, 6, and 19 apply at the acquisition planning stage prior to issuing the schedule solicitation and do not apply to orders and BPAs placed under resulting schedule contracts (see 8.404).

[FR Doc. 00–13821 Filed 6–1–00; 4:00 pm]

BILLING CODE 6820–EP–P

DEPARTMENT OF DEFENSE

GENERAL SERVICES ADMINISTRATION

NATIONAL AERONAUTICS AND SPACE ADMINISTRATION

48 CFR Parts 25 and 52

[FAC 97–18; FAR Case 2000–004; Item VI]

RIN 9000–AI78

Federal Acquisition Regulation; Trade Agreements Thresholds

AGENCIES: Department of Defense (DoD), General Services Administration (GSA), and National Aeronautics and Space Administration (NASA).

ACTION: Final rule.

SUMMARY: The Civilian Agency Acquisition Council and the Defense Acquisition Regulations Council (Councils) have agreed on a final rule amending the Federal Acquisition Regulation (FAR) to implement new dollar thresholds for application of the Trade Agreements Act (TAA) and North American Free Trade Agreement

(NAFTA), as published by the U.S. Trade Representative in the **Federal Register** at 65 FR 17332, March 31, 2000.

DATES: *Effective Date:* June 6, 2000.

Applicability Date: The FAR, as amended by this rule, is applicable to solicitations issued on or after June 6, 2000.

FOR FURTHER INFORMATION CONTACT: The FAR Secretariat, Room 4035, GS Building, Washington, DC, 20405, (202) 501–4755, for information pertaining to status or publication schedules. For clarification of content, contact Mr. Paul Linfield, Procurement Analyst, at (202) 501–1757. Please cite FAC 97–18, FAR case 2000–004.

SUPPLEMENTARY INFORMATION:

A. Background

This final rule amends FAR Subparts 25.2, 25.4, 25.6, and 25.11 to implement new dollar thresholds for application of the Trade Agreements Act (TAA) and North American Free Trade Agreement (NAFTA), as published by the U.S. Trade Representative in the **Federal Register** at 65 FR 17332, March 31, 2000.

The rule also amends the clauses at FAR 52.225–11, Buy American Act—Balance of Payments Program—Construction Materials under Trade Agreements, and 52.225–12, Notice of Buy American Act—Balance of Payments Program Requirements—Construction Materials under Trade Agreements. This rule revises Alternate I to FAR 52.225–11, because the threshold for NAFTA construction is now higher than the threshold for TAA construction, and adds the corresponding alternate to 52.225–12.

This rule was not subject to Office of Management and Budget review under Section 6(b) of Executive Order 12866, Regulatory Planning and Review, dated September 30, 1993. This rule is not a major rule under 5 U.S.C. 804.

B. Regulatory Flexibility Act

The final rule does not constitute a significant FAR revision within the meaning of FAR 1.501 and Public Law 98–577, and publication for public comments is not required. However, the Councils will consider comments from small entities concerning the affected FAR subparts 25 and 52 in accordance with 5 U.S.C. 610. Interested parties must submit such comments separately and should cite 5 U.S.C. 601, *et seq.* (FAC 97–18, FAR case 2000–004), in correspondence.

C. Paperwork Reduction Act

The Paperwork Reduction Act applies. However, the Councils' amendments to the FAR do not change information collection requirements previously approved by the Office of Management and Budget under 44 U.S.C. 3501, *et seq.* The approved OMB clearances for the affected clauses are 9000–0022, 9000–0023, 9000–0024, 9000–0025, 9000–0130, and 9000–0141.

List of Subjects in 48 CFR Parts 25 and 52

Government procurement.

Dated: May 26, 2000.

Edward C. Loeb,

Director, Federal Acquisition Policy Division.

Therefore, DoD, GSA, and NASA amend 48 CFR parts 25 and 52 as set forth below:

1. The authority citation for 48 CFR parts 25 and 52 continues to read as follows:

Authority: 40 U.S.C. 486(c); 10 U.S.C. chapter 137; and 42 U.S.C. 2473(c).

PART 25—FOREIGN ACQUISITION

2. In section 25.202, revise paragraph (c) to read as follows:

25.202 Exceptions.

* * * * *

(c) *Acquisitions under trade agreements.* For construction contracts with an estimated acquisition value of $6,806,000 or more, see 25.403. If the acquisition value is $7,068,419 or more, also see 25.405.

3. In section 25.403, revise paragraph (b)(1) to read as follows:

25.403 Trade Agreements Act.

* * * * *

(b) *Thresholds.* (1) Except as provided in 25.401, the Trade Agreements Act applies to an acquisition for supplies or services if the estimated value of the acquisition is $177,000 or more; the Trade Agreements Act applies to an acquisition for construction if the estimated value of the acquisition is $6,806,000 or more. These dollar thresholds are subject to revision by the U.S. Trade Representative approximately every 2 years (see Executive Order 12260).

* * * * *

25.405 [Amended]

4. Amend section 25.405 as follows:

a. In paragraph (a) remove ''$53,150'' and add ''$54,372'' in its place;

b. In paragraph (b) remove ''$6,909,500'' and add ''$7,068,419'' in its place; and

c. In paragraph (c) remove ''$53,150'' and ''$6,909,500'' and add in their places ''$54,372'' and ''$7,068,419'', respectively.

25.601 [Amended]

5. Amend paragraph (a) of section 25.601 as follows:

a. In paragraph (a)(1) remove ''$186,000'' and add ''$177,000'' in its place;

b. In paragraph (a)(2) remove ''$7,143,000'' and add ''$6,806,000'' in its place; and

c. In paragraph (a)(3)(ii) remove ''$186,000'' and add ''$177,000'' in its place.

25.1101 [Amended]

6. Amend section 25.1101 as follows:

a. In paragraph (b)(1)(i) remove ''$186,000'' and add ''$177,000'' in its place;

b. In paragraphs (b)(1)(iii) and (b)(2)(iii) remove ''$53,150'' and add in their places ''$54,372''; and

c. In paragraphs (c)(1) and (d) remove ''$186,000'' and add in their places ''$177,000''.

7. Amend section 25.1102 as follows:

a. In paragraphs (a) and (c) remove ''$6,909,500'' and add in their places ''$6,806,000'';

b. Revise paragraph (c)(3); and

c. Add paragraph (d)(3) to read as follows:

25.1102 Acquisition of construction.

* * * * *

(c) * * *

(3) For acquisitions valued at $6,806,000 or more, but less than $7,068,419, use the clause with its Alternate I.

* * * * *

(d) * * *

(3) For acquisitions valued at $6,806,000 or more, but less than $7,068,419, use the clause with its Alternate II.

25.1103 [Amended]

8. Amend section 25.1103 in paragraphs (c)(1)(i) and (c)(1)(ii)(B) by removing ''$186,000'' and adding ''$177,000'' in their places.

PART 52—SOLICITATION PROVISIONS AND CONTRACT CLAUSES

9. In section 52.225–11, in the introductory paragraph remove ''25.1102(c)(1)'' and add ''25.1102(c)'' in its place; and revise Alternate I to read as follows:

52.225–11 Buy American Act—Balance of Payments Program—Construction Materials under Trade Agreements.

* * * * *

Alternate I (June 2000). As prescribed in 25.1102(c)(3), delete the definitions of ''North

American Free Trade Agreement country'' and ''North American Free Trade Agreement country construction material'' from the definitions in paragraph (a) of the basic clause and substitute the following paragraphs (b)(1) and (b)(2) for paragraphs (b)(1) and (b)(2) of the basic clause:

(b) *Construction materials.* (1) This clause implements the Buy American Act (41 U.S.C. 10a-10d) and the Balance of Payments Program by providing a preference for domestic construction material. In addition, the Contracting Officer has determined that the Trade Agreements Act applies to this acquisition. Therefore, the Buy American Act and Balance of Payments Program restrictions are waived for designated country construction materials.

(2) The Contractor shall use only domestic or designated country construction material in performing this contract, except as provided in paragraphs (b)(3) and (b)(4) of this clause.

10. In section 52.225–12, add Alternate II to read as follows:

52.225–12 Notice of Buy American Act/ Balance of Payments Program Requirement—Construction Materials under Trade Agreements.

* * * * *

Alternate II (June 2000). As prescribed in 25.1102(d)(3), substitute the following paragraphs (a) and (d) for paragraphs (a) and (d) of the basic provision:

(a) *Definitions.* ''Construction material,'' ''designated country construction material,'' ''domestic construction material,'' and ''foreign construction material,'' as used in this provision, are defined in the clause of this solicitation entitled ''Buy American Act—Balance of Payments Program—Construction Materials under Trade Agreements'' (Federal Acquisition Regulation (FAR) clause 52.225–11).

(d) *Alternate offers.* (1) When an offer includes foreign construction material, other than designated country construction material, that is not listed by the Government in this solicitation in paragraph (b)(3) of FAR clause 52.225–11, the offeror also may submit an alternate offer based on use of equivalent domestic or designated country construction material.

(2) If an alternate offer is submitted, the offeror shall submit a separate Standard Form 1442 for the alternate offer, and a separate price comparison table prepared in accordance with paragraphs (c) and (d) of FAR clause 52.225–11 for the offer that is based on the use of any foreign construction material for which the Government has not yet determined an exception applies.

(3) If the Government determines that a particular exception requested in accordance with paragraph (c) of FAR clause 52.225–11 does not apply, the Government will evaluate only those offers based on use of the equivalent domestic or designated country construction material, and the offeror shall be required to furnish such domestic or designated country construction material. An offer based on use of the foreign construction material for which an exception was requested—

(i) Will be rejected as nonresponsive if this acquisition is conducted by sealed bidding; or

(ii) May be accepted if revised during negotiations.

[FR Doc. 00–13822 Filed 6–1–00; 4:01 pm]

BILLING CODE 6820–EP–P

DEPARTMENT OF DEFENSE

GENERAL SERVICES ADMINISTRATION

NATIONAL AERONAUTICS AND SPACE ADMINISTRATION

48 CFR Parts 25 and 52

[FAC 97–18; FAR Case 1999–008; Item VII]

RIN 9000–AI54

Federal Acquisition Regulation; Restrictions on Acquisitions from Yugoslavia and Afghanistan

AGENCIES: Department of Defense (DoD), General Services Administration (GSA), and National Aeronautics and Space Administration (NASA).

ACTION: Final rule.

SUMMARY: The Civilian Agency Acquisition Council and the Defense Acquisition Regulations Council (Councils) have agreed on a final rule amending the Federal Acquisition Regulation (FAR) to implement two Executive orders, as modified by Office of Foreign Assets Control (OFAC) General Licenses Numbers 2 and 4. These Executive orders prohibit the importation into the United States of any goods or services from Serbia (excluding the territory of Kosovo) or the territory of Afghanistan controlled by the Taliban.

DATES: *Effective Date:* July 6, 2000.

Applicability Date: The FAR, as amended by this rule, is applicable to solicitations issued on or after July 6, 2000.

FOR FURTHER INFORMATION CONTACT: The FAR Secretariat, Room 4035, GS Building, Washington, DC, 20405, (202) 501–4755, for information pertaining to status or publication schedules. For clarification of content, contact Mr. Paul Linfield, Procurement Analyst, at (202) 501–1757. Please cite FAC 97–18, FAR case 1999–008.

SUPPLEMENTARY INFORMATION:

A. Background

This final rule amends FAR Subpart 25.7, section 25.1103, and the clauses at FAR 52.212–5, Contract Terms and Conditions Required to Implement Statutes or Executive Orders—Commercial Items, FAR 52.213–4, Terms and Conditions—Simplified Acquisitions (Other Than Commercial Items), and FAR 52.225–13, Restrictions on Foreign Purchases, to implement Executive Order 13121 of April 30, 1999, Blocking Property and Prohibiting Transactions With the Taliban; and Executive Order 13129 of July 4, 1999, Blocking Property of the Governments of the Federal Republic of Yugoslavia (Serbia and Montenegro), the Republic of Serbia, and the Republic of Montenegro, and Prohibiting Trade Transactions Involving the Federal Republic of Yugoslavia (Serbia and Montenegro) in Response to the Situation in Kosovo. These Executive orders, as modified by OFAC General Licenses Numbers 2 and 4, prohibit the importation into the United States of any goods or services from Serbia (excluding the territory of Kosovo) or the territory of Afghanistan controlled by the Taliban. As a matter of policy, the Government does not generally acquire, even for overseas use, supplies or services that cannot be imported lawfully into the United States.

DoD, GSA, and NASA published a proposed rule in the **Federal Register** on December 1, 1999 (64 FR 67446). Four respondents submitted comments. The Councils considered all comments in the formulation of this final rule. This final rule differs from the proposed rule as follows:

- Limits the restriction to Serbia (excluding the territory of Kosovo), rather than Serbia and Montenegro, based on OFAC General Licenses Numbers 2 and 4. General License No. 2 was issued by OFAC on May 5, 1999, and relates to trade transactions with Montenegro. General License No. 4 was issued by OFAC on August 17, 1999, and relates to trade transactions involving the territory of Kosovo.
- Adds an exception at FAR 25.701(a)(2) permitting the contracting officer, in unusual circumstances, to acquire for use outside the United States supplies and services restricted in 25.701(a)(1).

This rule was not subject to Office of Management and Budget review under Section 6(b) of Executive Order 12866, Regulatory Planning and Review, dated September 30, 1993. This rule is not a major rule under 5 U.S.C. 804.

B. Regulatory Flexibility Act

The Department of Defense, the General Services Administration, and the National Aeronautics and Space Administration certify that this final rule will not have a significant economic impact on a substantial number of small entities within the

meaning of the Regulatory Flexibility Act, 5 U.S.C. 601, *et seq.*, because it only applies to acquisition of items from Serbia or Afghanistan.

C. Paperwork Reduction Act

The Paperwork Reduction Act does not apply because the changes to the FAR do not impose information collection requirements that require the approval of the Office of Management and Budget under 44 U.S.C. 3501, *et seq.*

List of Subjects in 48 CFR Parts 25 and 52

Government procurement.

Dated: May 26, 2000.

Edward C. Loeb,

Director, Federal Acquisition Policy Division.

Therefore, DoD, GSA, and NASA amend 48 CFR parts 25 and 52 as set forth below:

1. The authority citation for 48 CFR parts 25 and 52 continues to read as follows:

Authority: 40 U.S.C. 486(c); 10 U.S.C. chapter 137; and 42 U.S.C. 2473(c).

PART 25—FOREIGN ACQUISITION

2. Amend section 25.701 by revising paragraph (a) to read as follows:

25.701 Restrictions.

(a)(1) The Government generally does not acquire supplies or services that cannot be imported lawfully into the United States. Therefore, except as provided in paragraph (a)(2) of this section, even for overseas use, agencies and their contractors and subcontractors must not acquire any supplies or services originating from sources within, or that were located in or transported from or through

(i) Cuba (31 CFR part 515);

(ii) Iran (31 CFR part 560);

(iii) Iraq (31 CFR part 575);

(iv) Libya (31 CFR part 550);

(v) North Korea (31 CFR part 500);

(vi) Sudan (31 CFR part 538);

(vii) Territory of Afghanistan controlled by the Taliban (Executive Order 13129 of July 4, 1999, Blocking Property and Prohibiting Transactions With the Taliban); or

(viii) Serbia, excluding the territory of Kosovo (Executive Order 13121 of April 30, 1999, Blocking Property of the Governments of the Federal Republic of Yugoslavia (Serbia and Montenegro), the Republic of Serbia, and the Republic of Montenegro, and Prohibiting Trade Transactions Involving the Federal Republic of Yugoslavia (Serbia and Montenegro) in Response to the Situation in Kosovo).

(2)(i) Unless agency procedures require a higher level of approval, the contracting officer may, in unusual circumstances, acquire for use outside the United States supplies and services restricted in paragraph (a)(1) of this section. Examples of unusual circumstances are an emergency or when the supplies or services are not otherwise available and a substitute is not acceptable.

(ii) The contracting officer must provide documentation in the contract file whenever this exception is used.

* * * * *

3. Revise section 25.702 to read as follows:

25.702 Source of further information.

Refer questions concerning the restrictions in 25.701 to the Department of the Treasury, Office of Foreign Assets Control, Washington, D.C. 20220 (Telephone (202) 622–2520).

4. Amend section 25.1103 by revising paragraph (a) to read as follows:

25.1103 Other provisions and clauses.

(a) *Restrictions on certain foreign purchases.* Insert the clause at 52.225–13, Restrictions on Certain Foreign Purchases, in solicitations and contracts with a value exceeding $2,500, unless an exception applies (see 25.701(a)(2)).

PART 52—SOLICITATION PROVISIONS AND CONTRACT CLAUSES

5. Amend section 52.212–5 by—

a. Revising the date of the clause and paragraph (a);

b. In the first sentence of the introductory text of paragraphs (b), (c), and (d), by removing ''agrees to'' and adding ''shall'' in their place; and

c. Removing paragraph (b)(21) and redesignating paragraphs (b)(19) and (b)(20) as (b)(20) and (b)(21), respectively; and adding a new paragraph (b)(19) to read as follows:

52.212–5 Contract Terms and Conditions Required to Implement Statutes or Executive Orders—Commercial Items.

* * * * *

Contract Terms and Conditions Required to Implement Statutes or Executive Orders—Commercial Items (July 2000)

(a) The Contractor shall comply with the following FAR clauses, which are incorporated in this contract by reference, to implement provisions of law or executive orders applicable to acquisitions of commercial items:

(1) 52.222–3, Convict Labor (E.O. 11755).

(2) 52.233–3, Protest after Award (31 U.S.C. 3553).

(b) * * *

; (19) 52.225–13, Restriction on Certain Foreign Purchases (E.O. 12722, 12724, 13059, 13067, 13121, and 13129).

* * * * *

6. Amend section 52.213–4 by revising the date of the clause and paragraph (a)(1)(ii) to read as follows:

52.213–4 Terms and Conditions—Simplified Acquisitions (Other Than Commercial Items).

* * * * *

Terms and Conditions—Simplified Acquisitions (Other Than Commercial Items) (July 2000)

(a) * * *

(1) * * *

* * * * *

(ii) 52.225–13, Restrictions on Certain Foreign Purchases (July 2000) (E.O.'s 12722, 12724, 13059, 13067, 13121, and 13129).

* * * * *

7. Amend section 52.225–13 by revising the date of the clause and the last sentence of paragraph (a) to read as follows:

52.225–13 Restrictions on Certain Foreign Purchases.

* * * * *

Restrictions on Certain Foreign Purchases (July 2000)

(a) * * * Those countries are Cuba, Iran, Iraq, Libya, North Korea, Sudan, the territory of Afghanistan controlled by the Taliban, and Serbia (excluding the territory of Kosovo).

* * * * *

[FR Doc. 00–13823 Filed 6–1–00; 4:01 pm]

BILLING CODE 6820–EP–P

DEPARTMENT OF DEFENSE

GENERAL SERVICES ADMINISTRATION

NATIONAL AERONAUTICS AND SPACE ADMINISTRATION

48 CFR Parts 30 and 52

[FAC 97–18; FAR Case 2000–301; Item VIII]

RIN 9000–AI79

Federal Acquisition Regulation; Applicability, Thresholds and Waiver of Cost Accounting Standards Coverage

AGENCIES: Department of Defense (DoD), General Services Administration (GSA), and National Aeronautics and Space Administration (NASA).

ACTION: Interim rule with request for comments.

SUMMARY: The Civilian Agency Acquisition Council and the Defense Acquisition Regulations Council (Councils) have agreed on an interim rule amending the Federal Acquisition Regulation (FAR) to implement Section 802 of the National Defense

Authorization Act for Fiscal Year 2000 and the Cost Accounting Standards (CAS) Board's interim rule, Applicability, Thresholds and Waiver of Cost Accounting Standards Coverage. The FAR rule revises CAS applicability requirements, dollar thresholds, and waiver requirements.

DATES: Effective Date: June 6, 2000.

Applicability Date: The FAR, as amended by this rule, is applicable to solicitations issued on or after June 6, 2000.

Comment Date: Interested parties should submit comments to the FAR Secretariat at the address shown below on or before August 7, 2000 to be considered in the formulation of a final rule.

ADDRESSES: Submit written comments to: General Services Administration, FAR Secretariat (MVR), 1800 F Street, NW, Room 4035, Attn: Ms. Laurie Duarte, Washington, DC, 20405.

Submit electronic comments via the Internet to: farcase.2000–301@gsa.gov

Please submit comments only and cite FAC 97–18, FAR case 2000–301 in all correspondence related to this case.

FOR FURTHER INFORMATION CONTACT: The FAR Secretariat, Room 4035, GS Building, Washington, DC 20405, (202) 501–4755, for information pertaining to status or publication schedules. For clarification of content, contact Ms. Linda Nelson, Procurement Analyst, at (202) 501–1900. Please cite FAC 97–18, FAR case 2000–301.

SUPPLEMENTARY INFORMATION:

A. Background

Section 802 of the National Defense Authorization Act for Fiscal Year 2000 (Pub. L. 106–65)—

- Revised, at 41 U.S.C. 422(f)(2)(B), the categories of contracts and subcontracts that are exempt from all CAS requirements;
- Required the Administrator for Federal Procurement Policy to revise the rules and procedures issued under 41 U.S.C. 422(f) to increase the dollar threshold for full CAS coverage from $25 million to $50 million; and
- Revised 41 U.S.C. 422(f) to permit the head of an executive agency to waive the applicability of CAS under certain conditions.

In response to Pub. L. 106–65, the CAS Board in the Office of Federal Procurement Policy published an interim rule in the **Federal Register** on February 7, 2000 (65 FR 5990). The CAS Board rule, Applicability, Thresholds and Waiver of Cost Accounting Standards Coverage, amended the regulations at 48 CFR part 9903 to implement Section 802.

This interim FAR rule—

- Amends the provision at FAR 52.230–1, Cost Accounting Standards Notices and Certification, to remove the requirement that a contractor or subcontractor must have received at least one CAS-covered contract exceeding $1 million (''trigger contract'') to be subject to ''full CAS coverage,'' since the CAS Board removed this ''trigger contract'' amount from its corresponding solicitation provision, Cost Accounting Standards Notices and Certification, at 48 CFR 9903.201–3. The CAS Board added a new ''trigger contract'' dollar amount of $7.5 million at paragraph (b)(7) of 48 CFR 9903.201–1, CAS applicability, which is already referenced at FAR 30.201–1;
- Revises FAR 30.201–4(b), Disclosure and consistency of cost accounting practices, and amends the provision at FAR 52.230–1 to reflect changes made by the CAS Board to increase the dollar threshold for full CAS coverage from $25 million to $50 million; and
- Revises the CAS waiver procedures and conditions at FAR 30.201–5, as required by Section 802 of Pub. L. 106–65.

This rule was not subject to Office of Management and Budget review under Section 6(b) of Executive Order 12866, Regulatory Planning and Review, dated September 30, 1993. This rule is not a major rule under 5 U.S.C. 804.

B. Regulatory Flexibility Act

The interim rule is not expected to have a significant economic impact on a substantial number of small entities within the meaning of the Regulatory Flexibility Act, 5 U.S.C. 601, *et seq.*, because contracts and subcontracts with small businesses are exempt from all CAS requirements in accordance with 48 CFR 9903.201–1(b)(3). Therefore, an Initial Regulatory Flexibility Analysis has not been performed. The Councils will consider comments from small entities concerning the affected FAR subparts in accordance with 5 U.S.C. 610. Interested parties must submit such comments separately and should cite 5 U.S.C 601, *et seq.* (FAC 97–18, FAR case 2000–301), in correspondence.

C. Paperwork Reduction Act

The Paperwork Reduction Act does not apply because the changes to the FAR do not impose information collection requirements that require the approval of the Office of Management and Budget under 44 U.S.C. 3501, *et seq.*

D. Determination To Issue an Interim Rule

A determination has been made under the authority of the Secretary of Defense (DoD), the Administrator of General Services (GSA), and the Administrator of the National Aeronautics and Space Administration (NASA) that urgent and compelling reasons exist to promulgate this interim rule without prior opportunity for public comment. This action is necessary because this rule implements Section 802 of the National Defense Authorization Act for Fiscal Year 2000 (Pub. L. 106–65) and the Cost Accounting Standards (CAS) Board's interim rule, Applicability, Thresholds and Waiver of Cost Accounting Standards Coverage. Section 802 became effective 180 days after the date of enactment of Public Law 106–65 (October 5, 1999). The CAS Board's interim rule that implements Section 802 became effective on April 2, 2000. It is necessary that the Councils publish an interim FAR rule to amend FAR Parts 30 and 52 to implement Section 802 and the CAS Board's interim rule. However, pursuant to Public Law 98–577 and FAR 1.501, the Councils will consider public comments received in response to this interim rule in the formation of the final rule.

List of Subjects in 48 CFR Parts 30 and 52

Government procurement.

Dated: May 26, 2000.

Edward C. Loeb,

Director, Federal Acquisition Policy Division.

Therefore, DoD, GSA, and NASA amend 48 CFR parts 30 and 52 as set forth below:

1. The authority citation for 48 CFR parts 30 and 52 continues to read as follows:

Authority: 40 U.S.C. 486(c); 10 U.S.C. chapter 137; and 42 U.S.C. 2473(c).

PART 30—COST ACCOUNTING STANDARDS ADMINISTRATION

2. Amend section 30.201–4 by revising paragraph (b)(1) to read as follows:

30.201–4 Contract clauses.

* * * * *

(b) *Disclosure and consistency of cost accounting practices.* (1) Insert the clause at FAR 52.230–3, Disclosure and Consistency of Cost Accounting Practices, in negotiated contracts when the contract amount is over $500,000, but less than $50 million, and the offeror certifies it is eligible for and elects to use modified CAS coverage (see 48 CFR 9903.201–2 (FAR

Appendix)), unless the clause prescribed in paragraph (c) of this subsection is used.

* * * * *

3. Revise section 30.201–5 to read as follows:

30.201–5 Waiver.

(a) The head of the agency—

(1) May waive the applicability of CAS for a particular contract or subcontract under the conditions listed in paragraph (b) of this subsection; and

(2) Must not delegate this waiver authority to any official in the agency below the senior contract policymaking level.

(b) The head of the agency may grant a waiver when one of the following conditions exists:

(1) The contract or subcontract value is less than $15,000,000, and the head of the agency determines, in writing, that the segment of the contractor or subcontractor that will perform the contract or subcontract—

(i) Is primarily engaged in the sale of commercial items; and

(ii) Has no contracts or subcontracts that are subject to CAS.

(2) The head of the agency determines that exceptional circumstances exist whereby a waiver of CAS is necessary to meet the needs of the agency. Exceptional circumstances exist only when the benefits to be derived from waiving the CAS outweigh the risk associated with the waiver. The determination that exceptional circumstances exist must—

(i) Be set forth in writing; and

(ii) Include a statement of the specific circumstances that justify granting the waiver.

(c) When one of the conditions in paragraph (b) of this subsection exists, the request for waiver should include the following:

(1) The amount of the proposed award.

(2) A description of the contract or subcontract type (*e.g.,* firm-fixed-price, cost-reimbursement).

(3) Whether the segment(s) that will perform the contract or subcontract has CAS-covered contracts or subcontracts.

(4) A description of the item(s) being procured.

(5) When the contractor or subcontractor will not accept the contract or subcontract if CAS applies, a statement to that effect.

(6) Whether cost or pricing data will be obtained, and if so, a discussion of how the data will be used in negotiating the contract or subcontract price.

(7) The benefits to the Government of waiving CAS.

(8) The potential risk to the Government of waiving CAS.

(9) The date by which the waiver is needed.

(10) Any other information that may be useful in evaluating the request.

(d) When neither of the conditions in paragraph (b) of this subsection exists, the waiver request must be prepared in accordance with 48 CFR 9903.201–5(e) (FAR Appendix) and submitted to the CAS Board.

(e) Each agency must report any waivers granted under paragraph (a) of this subsection to the CAS Board, on a fiscal year basis, not later than 90 days after the close of the Government's fiscal year.

PART 52—SOLICITATION PROVISIONS AND CONTRACT CLAUSES

4. Amend section 52.230–1 by—

a. Revising the date of the provision;

b. In the first sentence of paragraph (c)(3) by removing the phrase ''more than $25 million (of which at least one award exceeded $1 million)'' and adding ''$50 million or more'' in its place;

c. In paragraph (c)(4)—

(i) In the ''Caution'' paragraph, by removing ''$25 million'' and adding ''$50 million'' in its place;

(ii) At ''II. Cost Accounting Standards—Eligibility for Modified Contract Coverage,'' in the second paragraph, by revising the first sentence; and

(iii) In the ''Caution'' paragraph following paragraph II by removing ''$25 million'' each time it is used (twice) and adding ''$50 million'' in their places. The revised text reads as follows:

52.230–1 Cost Accounting Standards Notices and Certification.

* * * * *

COST ACCOUNTING STANDARDS NOTICES AND CERTIFICATION (JUNE 2000)

* * * * *

(c) * * *

(4) * * *

II. Cost Accounting Standards—Eligibility for Modified Contract Coverage

* * * * *

☐ The offeror hereby claims an exemption from the Cost Accounting Standards clause under the provisions of 48 CFR 9903.201–2(b) and certifies that the offeror is eligible for use of the Disclosure and Consistency of Cost Accounting Practices clause because during the cost accounting period immediately preceding the period in which this proposal was submitted, the offeror received less than $50 million in awards of CAS-covered prime contracts and subcontracts.

* * * * *

[FR Doc. 00–13824 Filed 6–1–00; 4:02 pm]

BILLING CODE 6820–EP–P

DEPARTMENT OF DEFENSE

GENERAL SERVICES ADMINISTRATION

NATIONAL AERONAUTICS AND SPACE ADMINISTRATION

48 CFR Parts 3, 5, 47, and 49

[FAC 97–18; Item IX]

Federal Acquisition Regulation; Technical Amendments

AGENCIES: Department of Defense (DoD), General Services Administration (GSA), and National Aeronautics and Space Administration (NASA).

ACTION: Technical amendments.

SUMMARY: This document makes amendments to the Federal Acquisition Regulation in order to update references and make editorial changes.

EFFECTIVE DATE: June 6, 2000.

FOR FURTHER INFORMATION CONTACT: The FAR Secretariat, Room 4035, GS Building, Washington, DC 20405, (202) 501–4755.

List of Subjects in 48 CFR parts 3, 5, 47, and 49

Government procurement.

Dated: May 26, 2000.

Edward C. Loeb,

Director, Federal Acquisition Policy Division.

Therefore, DoD, GSA, and NASA amend 48 CFR parts 3, 47, and 49 as set forth below:

1. The authority citation for 48 CFR parts 3, 47, and 49 continues to read as follows:

Authority: 40 U.S.C. 486(c); 10 U.S.C. chapter 137; and 42 U.S.C. 2473(c).

PART 3—IMPROPER BUSINESS PRACTICES AND PERSONAL CONFLICTS OF INTEREST

3.303 [Amended]

2. Amend section 3.303 in the first sentence of paragraph (a) by removing ''41 U.S.C. 253(B)(e) and 10 U.S.C. 2305(b)(5)'' and adding ''41 U.S.C. 253b(i) and 10 U.S.C. 2305(b)(9)'' in its place.

PART 5—PUBLICIZING CONTRACT ACTIONS

3. Revise the last sentence of section 5.204 to read as follows:

5.204 Presolicitation notices.

* * * Synopsizing of a proposed contract action is required prior to issuance of any resulting solicitation (see 5.201 and 5.203).

PART 47—TRANSPORTATION

47.504 [Amended]

4. In section 47.504, amend the first sentence of paragraph (e) by removing ''(see 12.504(a)(13))'' and adding ''(see 12.504(a)(11))'' in its place.

PART 49—TERMINATION OF CONTRACTS

5. Remove ''19...'' and add ''20 '' in the following places:

a. Section 49.601–1 in paragraphs (a) and (b); and

b. Section 49.601–2 in paragraph (a) of the Notice of Termination to Prime Contractors; in paragraph (i) in the Acknowledgment of Notice; and in paragraph (a) of the Alternate notice.

[FR Doc. 00–13825 Filed 6–1–00; 4:02 pm]

BILLING CODE 6820–EP–P

DEPARTMENT OF DEFENSE

GENERAL SERVICES ADMINISTRATION

NATIONAL AERONAUTICS AND SPACE ADMINISTRATION

48 CFR Chapter 1

Federal Acquisition Regulation; Small Entity Compliance Guide

AGENCIES: Department of Defense (DoD), General Services Administration (GSA), and National Aeronautics and Space Administration (NASA).

ACTION: Small Entity Compliance Guide.

SUMMARY: This document is issued under the joint authority of the Secretary of Defense, the Administrator of General Services and the Administrator for the National Aeronautics and Space Administration. This *Small Entity Compliance Guide* has been prepared in accordance with Section 212 of the Small Business Regulatory Enforcement Fairness Act of 1996 (Public Law 104–121). It consists of a summary of rules appearing in Federal Acquisition Circular (FAC) 97–18 which amend the FAR. The rules marked with an asterisk (*) indicates that a regulatory flexibility analysis has been prepared in accordance with 5 U.S.C. 604. Interested parties may obtain further information regarding these rules by referring to FAC 97–18 which precedes this document. These documents are also available via the Internet at http://www.arnet.gov/far.

FOR FURTHER INFORMATION CONTACT: Laurie Duarte, FAR Secretariat, (202) 501–4225. For clarification of content, contact the analyst whose name appears in the table below.

LIST OF RULES IN FAC 97–18

Item	Subject	FAR case	Analyst
I	Rescission of Office of Federal Procurement Policy Letters	2000–605	Olson.
II	FAR Drafting Principles	1999–610	De Stefano.
III	Requirements Supporting Procurement of Recycled Products and Environmentally Preferable Services *.	1998–015 (98–015)	Linfield.
IV	General Records Schedules	1999–615	Nelson.
V	Federal Supply Schedules Small Business Opportunities *	1998–609 (98–609)	Nelson.
VI	Trade Agreements Thresholds	2000–004	Linfield.
VII	Restrictions on Acquisitions from Yugoslavia and Afghanistan	1999–008	Linfield.
VIII	Applicability, Thresholds and Waiver of Cost Accounting Standards Coverage (Interim)	2000–301	Nelson.

Item I—Rescission of Office of Federal Procurement Policy Letters (FAR Case 2000–605)

This final rule reflects editorial amendments removing unnecessary cross-references to policy letters that were rescinded by the Office of Federal Procurement Policy (OFPP) (65 FR 16968, March 30, 2000).

Item II—FAR Drafting Principles (FAR Case 1999–610)

This final rule adds Federal Acquisition Regulation drafting principles to enhance a common understanding of the regulation among all members of the acquisition team and other users. This rule affects all contracting officers who use the FAR. The final rule adds drafting conventions in FAR 1.108 and amends 1.105–2, 52.101, 52.104, 52.105, and 52.200 to reflect current FAR drafting conventions.

Item III—Requirements Supporting Procurement of Recycled Products and Environmentally Preferable Services (FAR Case 1998–015 (98–015))

This final rule implements Executive Order 13101, Greening the Government through Waste Prevention, Recycling, and Federal Acquisition, dated September 14, 1998. This rule is significant for all contracting officers who buy supplies, including supplies that are furnished under a service contract. The rule rewrites text currently in the FAR based on earlier Executive orders, but reorganizes and relocates some of the text to conform to plain language guidelines for Government writing. The rewrite and reorganization should make the text easier to use and understand. The revisions also emphasize Executive branch policies for the acquisition of products containing recovered material and other environmentally preferable products and services. The rule—

- Revises FAR Subpart 7.1 to ensure that requirements for printing and writing paper meet minimum content requirements specified in the E.O.;
- Revises Subpart 11.3 to add definitions and special requirements to implement E.O. requirements and Environmental Protection Agency (EPA) regulations governing acquisitions of printing and writing paper, and to clarify that contracting officers may include in solicitations additional information requirements when needed to determine if the offeror's product meets requirements for recycled content or related standards;
- Clarifies in Part 13 how the procurement requirements of the Resource Conservation and Recovery Act, 42 U.S.C. 6962, apply to micro-purchases and acquisitions that do not exceed $100,000; and
- Reorganizes and revises Subparts 23.4 and 23.7 and associated clauses.

Item IV—General Records Schedules (FAR Case 1999–615)

This final rule implements National Archives and Records Administration General Records Schedule 3, Procurement, Supply, and Grants Records (NARA Schedule 3), dated December 15, 1998. This rule affects all contracting officers. The rule—

- Rewrites and reorganizes the text already in the FAR to make it easier to understand.
- Simplifies the retention table by grouping several categories of records that were previously treated as separate records under more generic record categories (*e.g.*, the contract file or the contract administration records).
- Deletes separate retention policy on signed original justifications and approvals, determinations and findings, and rejected engineering change proposals. Those records are retained with the contract files shown in blocks 2 through 7 of the new retention table.
- Deletes the separate retention period for contract status, expediting, and production surveillance records. Those records are retained with the contract administration records shown in block 7 of the new retention table.

Item V—Federal Supply Schedules Small Business Opportunities (FAR Case 1998–609) (98–609))

This final rule amends the Federal Acquisition Regulation to ensure that small businesses holding contracts under the Federal Supply Schedules are afforded the maximum practicable opportunity to compete for and receive FSS purchases. This rule affects all ordering offices which place orders under Federal Supply Schedule contracts. The rule—

- Encourages ordering offices to consider the availability of small business concerns under the schedule and encourages ordering offices to consider small businesses when conducting evaluations before placing an order.
- Amends FAR Subpart 38.1 to reaffirm that the General Services Administration and agencies delegated the authority to establish a Federal Supply Schedule must comply with all statutory and regulatory requirements before issuance of a solicitation.
- Revises the FSS guidance in accordance with the plain language guidelines in a White House memorandum, Plain Language in Government Writing, dated June 1, 1998.

Item VI—Trade Agreements Thresholds (FAR Case 2000–004)

This final rule amends FAR Subparts 25.2, 25.4, 25.6, and 25.11, and the clauses at 52.225–11 and 52.225–12 to implement new dollar thresholds for application of the Trade Agreements Act (TAA) and North American Free Trade Agreement (NAFTA), as published by the U.S. Trade Representative in the **Federal Register** at 65 FR 17332, March 31, 2000. Contracting Officers must review the new thresholds when acquiring supplies, services, or construction, in order to select the appropriate contract clauses to implement the Buy American Act, Balance of Payments Program, trade agreements, and sanctions of European Union country end products and services.

Item VII—Restrictions on Acquisitions from Yugoslavia and Afghanistan (FAR Case 1999–008)

This final rule amends FAR Subpart 25.7, section 25.1103, and the associated clauses at 52.212–5, 52.213–4, and 52.225–13, to implement Executive Orders 13121 and 13129. These Executive orders, as modified by Office of Foreign Assets Control (OFAC) General Licenses Numbers 2 and 4, prohibit the importation into the United States of any goods or services from Serbia (excluding the territory of Kosovo) or the territory of Afghanistan controlled by the Taliban. As a matter of policy, the Government does not generally acquire, even for overseas use, supplies or services that cannot be imported lawfully into the United States.

This rule primarily affects contracting officers making purchases overseas, for overseas use, because the Treasury Department already prohibits import of these restricted goods and services into the United States. The rule is particularly beneficial to contracting officers facing unusual circumstances overseas (such as location within a restricted territory), explicitly providing an exception for such circumstances.

Item VIII—Applicability, Thresholds and Waiver of Cost Accounting Standards Coverage (FAR Case 2000–301)

This interim rule amends FAR Part 30, Cost Accounting Standards Administration, and the provision at FAR 52.230–1, Cost Accounting Standards Notices and Certification, to implement Section 802 of the National Defense Authorization Act for Fiscal Year 2000 (Pub. L. 106–65) and the Cost Accounting Standards (CAS) Board's interim rule, Applicability, Thresholds and Waiver of Cost Accounting Standards Coverage. The FAR rule revises policies affecting which contractors and subcontractors must comply with Cost Accounting Standards. The rule—

- Amends the provision at FAR 52.230–1, Cost Accounting Standards Notices and Certification, to remove the requirement that a contractor or subcontractor must have received at least one CAS-covered contract exceeding $1 million (''trigger contract'') to be subject to full CAS coverage, since the CAS Board removed this ''trigger contract'' amount from its corresponding solicitation provision, Cost Accounting Standards Notices and Certification, at 48 CFR 9903.201–3. The CAS Board established a new ''trigger contract'' dollar amount of $7.5 million in the CAS applicability section of its regulations (48 CFR 9903.201–1) rather than in its solicitation provision. Since FAR 30.201–1 already references this section, no FAR changes were required to address the new ''trigger contract'' dollar amount;
- Increases the dollar threshold for full CAS coverage from $25 million to $50 million; and
- Adds procedures and conditions for agency waiver of the applicability of CAS.

Dated: May 26, 2000.

Edward C. Loeb,

Director, Federal Acquisition Policy Division.

[FR Doc. 00–13826 Filed 6–1–00; 4:02 pm]

BILLING CODE 6820–EP–P

Federal Register

Tuesday,
June 6, 2000

Part IV

Department of Defense

48 CFR Parts 225 and 230

Defense Federal Acquisition Regulation Supplement; NAFTA Procurement Threshold and Defense Federal Acquisition Regulation Supplement; Waiver of Cost Accounting Standards; Final Rules

DEPARTMENT OF DEFENSE

48 CFR Part 225

[DFARS Case 2000–D011]

Defense Federal Acquisition Regulation Supplement; NAFTA Procurement Threshold

AGENCY: Department of Defense (DoD).

ACTION: Final rule.

SUMMARY: The Acting Director of Defense Procurement has issued a final rule amending the Defense Federal Acquisition Regulation Supplement (DFARS). The rule implements the determination of the U.S. Trade Representative to increase the dollar threshold for application of the North American Free Trade Agreement (NAFTA) to procurement of goods from Mexico, from $53,150 to $54,372.

EFFECTIVE DATE: June 6, 2000.

FOR FURTHER INFORMATION CONTACT: Ms. Amy Williams, Defense Acquisition Regulations Council, OUSD(AT&L)DP (DAR), IMD 3D139, 3062 Defense Pentagon, Washington, DC 20301–3062. Telephone (703) 602–0288; telefax (703) 602–0350. Please cite DFARS Case 2000–D011.

SUPPLEMENTARY INFORMATION:

A. Background

On March 31, 2000 (65 FR 17332), the U.S. Trade Representative published a determination that increased the dollar threshold for application of NAFTA to procurement of goods from Mexico, from $53,150 to $54,372. This final rule amends the prescription for use of the clause at DFARS 252.225–7036, Buy American Act-North American Free Trade Agreement Implementation Act-Balance of Payments Program, to reflect the new dollar threshold.

This rule was not subject to Office of Management and Budget review under Executive Order 12866, dated September 30, 1993.

B. Regulatory Flexibility Act

This final rule does not constitute a significant revision within the meaning of FAR 1.501 and Public law 98–577 and publication for public comment is not required. However, DoD will consider comments from small entities concerning the affected DFARS subpart in accordance with 5 U.S.C. 610. Such comments should cite DFARS Case 2000–D011.

C. Paperwork Reduction Act

The Paperwork Reduction Act does not apply because the rule does not impose any information collection requirements that require the approval of the Office of Management and Budget under 44 U.S.C. 3501, *et seq.*

List of Subjects in 48 CFR Part 225

Government procurement.

Michele P. Peterson,

Executive Editor, Defense Acquisition Regulations Council.

Therefore, 48 CFR part 225 is amended as follows:

1. The authority citation for 48 CFR part 225 continues to read as follows:

Authority: 41 U.S.C. 421 and 48 CFR Chapter 1.

PART 225—FOREIGN ACQUISITION

225.1101 [Amended]

2. Section 225.1101 is amended in paragraphs (13)(i)(A) and (B) by removing ''$53,150'' and adding in its place ''$54,372''.

[FR Doc. 00–13827 Filed 6–5–00; 8:45 am]

BILLING CODE 5000–04–M

DEPARTMENT OF DEFENSE

48 CFR Part 230

[DFARS Case 2000–D012]

Defense Federal Acquisition Regulation Supplement; Waiver of Cost Accounting Standards

AGENCY: Department of Defense (DoD).

ACTION: Final rule

SUMMARY: The Acting Director of Defense Procurement has issued a final rule amending the Defense Federal Acquisition Regulation Supplement (DFARS) to add text pertaining to agency waiver of Cost Accounting Standards (CAS) requirements. This rule supplements a Federal Acquisition Regulation (FAR) rule on this subject that appears elsewhere in this issue of the **Federal Register.**

EFFECTIVE DATE: June 6, 2000.

FOR FURTHER INFORMATION CONTACT: Ms. Sandra Haberlin, Defense Acquisition Regulations Council, OUSD (AT&L) DP (DAR), IMD 3D139, 3062 Defense Pentagon, Washington, DC 20301–3062. Telephone (703) 602–0289; telefax (703) 602–0350. Please cite DFARS Case 2000–D012.

SUPPLEMENTARY INFORMATION:

A. Background

Section 802 of the National Defense Authorization Act for Fiscal Year 2000 (Public Law 106–65) amended 41 U.S.C. 422(f) to permit the head of an executive agency to waive the applicability of CAS under certain conditions. To implement Section 802, the CAS Board published an interim rule at 65 FR 5990 on February 7, 2000. The CAS Board's rule, Applicability, Thresholds, and Waiver of Cost Accounting Standards Coverage, amended the regulations at 48 CFR 9903, including § 9903.201–5, Waiver.

An interim rule amending the FAR Under Case Number 2000–301, Applicability, Thresholds, and Waiver of Cost Accounting Standards Coverage, appears elsewhere in this issue of the **Federal Register** to implement Section 802 and the CAS Board's interim rule. This DFARS rule supplements the FAR rule by—

1. Providing DoD procedures for processing CAS waivers;

2. Clarifying which DoD components may grant CAS waivers at what level of authority; and

3. Providing DoD procedures for submission of annual CAS waiver reports to the CAS Board.

This rule was not subject to Office of Management and Budget review under Executive Order 12866, dated September 30, 1993.

B. Regulatory Flexibility Act

This final rule does not constitute a significant revision within the meaning of FAR 1.501 and Public Law 98–577 and publication for public comment is not required. However, DoD will consider comments from small entities concerning the affected DFARS subpart in accordance with 5 U.S.C. 610. Such comments should cite DFARS Case 2000–D012.

C. Paperwork Reduction Act

The Paperwork Reduction Act does not apply because the rule does not impose any information collection requirements that require the approval of the Office of Management and Budget under 44 U.S.C. 3501, *et seq.*

List of Subjects in 48 CFR Part 230

Government procurement.

Michele P. Peterson,

Executive Editor, Defense Acquisition Regulations Council.

Therefore, 48 CFR part 230 is amended as follows:

1. The authority citation for 48 CFR part 230 continues to read as follows:

Authority: 41 U.S.C. 421 and 48 CFR Chapter 1.

PART 230—COST ACCOUNTING STANDARDS ADMINISTRATION

2. Subpart 230.2 is added to read as follows:

Subpart 230.2—CAS Program Requirements

Sec.
230.201–5 Waiver.
230.201–5 Waiver.

(a)(1)(A) The military departments—

(1) May grant CAS waivers that meet the conditions in FAR 30.201–5(b); and

(2) Unless otherwise authorized by the Director of Defense Procurement, Office of the Under Secretary of Defense (Acquisition, Technology, and Logistics), must submit each CAS waiver request to the Director of Defense Procurement for review at least 14 days before granting the waiver.

(B) DoD contracting activities that are not within a military department must submit CAS waiver requests that meet the conditions in FAR 30.201–5(b) to the Director of Defense Procurement for approval at least 30 days before the anticipated contract award date.

(2) The military departments must not delegate CAS waiver authority below the individual responsible for issuing contracting policy for the department.

(e)(i) by November 15th of each year, the military departments must provide a report of all waivers granted under FAR 30.201–5(a) during the previous fiscal year to the Director of Defense Procurement.

(ii) The Director of Defense Procurement will submit a consolidated DoD report to the CAS Board.

[FR Doc. 00–13828 Filed 6–5–00; 8:45 am]
BILLING CODE 5000–04–M

Federal Register

Tuesday,
June 6, 2000

Part V

Department of Education

List of Correspondence—Office of Special Education and Rehabilitative Services; Notice

DEPARTMENT OF EDUCATION

List of Correspondence—Office of Special Education and Rehabilitative Services

AGENCY: Department of Education.

ACTION: List of correspondence from January 3, 2000 through March 31, 2000.

SUMMARY: The Secretary is publishing the following list pursuant to section 607(d) of the Individuals with Disabilities Education Act (IDEA). Under section 607(d) of IDEA, the Secretary is required, on a quarterly basis, to publish in the **Federal Register** a list of correspondence from the Department of Education received by individuals during the previous quarter that describes the interpretations of the Department of Education of IDEA or the regulations that implement IDEA.

FOR FURTHER INFORMATION CONTACT: JoLeta Reynolds or Rhonda Weiss. Telephone: (202) 205–5507. Individuals who use a telecommunications device for the deaf (TDD) may call (202) 205–5465 or the Federal Information Relay Service (FIRS) at 1–800–877–8339 between 8 a.m. and 8 p.m., Eastern time, Monday through Friday, except Federal holidays.

Individuals with disabilities may obtain a copy of this notice in an alternate format (*e.g.,* Braille, large print, audiotape, or computer diskette) on request to Katie Mincey, Director of the Alternate Formats Center. Telephone: (202) 205–8113.

SUPPLEMENTARY INFORMATION: The following list identifies correspondence from the Department issued between January 3, 2000 through March 31, 2000.

Included on the list are those letters that contain interpretations of the requirements of IDEA and its implementing regulations, as well as letters and other documents that the Department believes will assist the public in understanding the requirements of the law and its regulations. The date and topic addressed by a letter are identified, and summary information is also provided, as appropriate. To protect the privacy interests of the individual or individuals involved, personally identifiable information has been deleted, as appropriate.

Part A: General Provisions

Section 602—Definitions

Topic Addressed: Child With a Disability

- Letter dated March 24, 2000 to individual, (personally identifiable information redacted), regarding school districts' obligations to appropriately evaluate children with attention deficit disorder (ADD) under Part B of IDEA, and clarifying applicable requirements under Part B of IDEA for children who have a prior medical diagnosis of ADD and the relationship of relevant State requirements to applicable Part B requirements.
- Letter dated March 24, 2000 to Education Consultant and Advocate Michele Williams, regarding identification, evaluation, eligibility, and the provision of appropriate services and interventions in the least restrictive setting for children with Asperger's Syndrome determined eligible for services under Part B of IDEA.

Part B: Assistance for Education of all Children With Disabilities

Section 611—Authorization; Allotment; Use of Funds; Authorization of Appropriations

Topic Addressed: Use of Funds

- Letter dated February 7, 2000 to California State Department of Education Special Education Director Dr. Alice Parker, regarding a finding in a Federal Fiscal Year (FFY) 1996 audit report questioning the use of Part B of IDEA funds to pay parents' or guardians' attorneys' fees in lawsuits against the State and clarifying that the IDEA March 12, 1999 final regulations explicitly prohibit using Part B of IDEA funds to pay attorneys' fees.
- Letter dated March 8, 2000 to U.S. Senator Bob Graham, explaining that the Department does not provide Federal funds directly to parents, private schools, or a local educational agency (LEA) to pay the cost of special education programs for children with disabilities, but that State, local, or private sources of support may be available for this purpose.

Topic Addressed: Eligible Entities

- Letter dated March 15, 2000 to the Office of U.S. Senator Don Nickles, regarding eligibility of State-supported schools for Federal education program funds, clarifying that a State-supported school cannot be made eligible for these funds in the absence of authorizing legislation, and that under many Federal programs, including Part B of IDEA, State-supported schools can be eligible for funds if they qualify as local school districts.

Section 612—State Eligibility

Topic Addressed: Free Appropriate Public Education

- Letter dated March 29, 2000 to Michigan Protection and Advocacy Attorney Stewart R. Hakola, regarding Michigan's School-of-Choice legislation, and clarifying that (1) States may establish mechanisms to ensure that students with disabilities attending public school choice programs retain the right to a free appropriate public education (FAPE), and (2) the Department's view that a provision in the Michigan law requiring a written agreement between the resident district and the non-resident district regarding the provision of FAPE for any student with a disability who is enrolled in a non-resident school or program does not violate Part B of IDEA or Section 504 of the Rehabilitation Act of 1973.
- Letter dated March 20, 2000 to Illinois State Board of Education Special Education Director Dr. Gordon M. Riffel, clarifying that there is no provision in Part B of IDEA that would permit a school district to make the award of compensatory services to a student with a disability contingent on the student's delaying graduation from high school, when a determination has been made as a result of a complaint resolution that compensatory services are necessary to remedy the denial of FAPE to that student.

Topic Addressed: Children With Disabilities Placed in Private Schools by Their Parents

- Letter dated January 21, 2000 to U.S. Congressman David L. Hobson, regarding a parent's request for speech services for their child with a disability who is parentally-placed at a private school, and clarifying that the March 12, 1999 final regulations regarding the participation of parentally-placed private school children with disabilities accurately reflect the applicable statutory provision in the IDEA Amendments of 1997 and the Department's longstanding interpretations of the relevant statutory and regulatory requirements regarding the participation of these children in programs assisted or carried out under Part B of IDEA.

Topic Addressed: State Educational Agency General Supervisory Responsibility

- Letter dated February 9, 2000 to Massachusetts Department of Education Program and Quality Assurance Administrator John Stager, regarding the State's obligation to recover the Part B of IDEA funds received by the Boston Renaissance Charter School because the charter school counted children with disabilities but did not produce required documentation that those children had received appropriate special education and related services.

• Letter dated February 10, 2000 to Lawrence M. Siegel, Esq., explaining the Department's view that a State complaint unit's decision—which found that a complaint did not allege a violation of Part B of IDEA—was valid, since the issue raised in the particular complaint concerned the district's alleged failure to provide services for a student with a disability in the succeeding school year.

• Letter dated February 10, 2000 to Maryland State Department of Education Special Education Assistant Superintendent Carol Ann Baglin, regarding the State's authority to require a corrective action in resolving a complaint against a school district which prohibits that district from allowing parents to voluntarily waive their right to receive a copy of procedural safeguards available to parents under Part B of IDEA, since the statute specifies the times when the procedural safeguards notice must be provided and does not authorize any exceptions.

• Letter dated February 28, 2000 to Alaska Department of Education and Early Development Commissioner Richard S. Cross, informing Alaska that, despite the unique circumstances set out in its inquiry, there is no authority in IDEA for the Department to grant a State a waiver of the requirement that it revise its State statutes to comply with the requirements of the IDEA Amendments of 1997 in order for the State to receive its Part B of IDEA grant awards for FFY 2000.

• Letter dated March 27, 2000 to Virginia Department of Education Acting Superintendent Dr. Jo Lynne DeMary, informing the Virginia Department of Education that (1) its failure to comply with the regulation at 34 CFR 300.514(c)—which addresses what constitutes a child's ''stay-put'' or ''pendency'' placement if the decision of a hearing officer in a due process hearing conducted by the SEA or a State review official in an administrative appeal agrees with the child's parents that a change of placement is appropriate—could result in enforcement action against the State, and (2) compliance with this regulation, which is a valid and appropriate exercise of the Department's regulatory authority, is required of all States receiving IDEA funds.

Topic Addressed: Coordinated Services

• Memorandum to Chief State School Officers dated January 24, 2000, regarding distribution of Office of Special Education Programs (OSEP) Memorandum 00–7 dated January 13, 2000 to State Directors of Special Education, which explains five provisions in the IDEA Amendments of 1997 that enhance coordinated services and are designed to improve results for students with disabilities.

Topic Addressed: Participation in State and District-Wide Assessment Programs

• Letter dated February 4, 2000 to individual, (personally identifiable information redacted), regarding the importance of ensuring that students with disabilities are fully included in the benefits of State and district-wide assessment programs and that States that report data about the performance of nondisabled children on assessments at the district or State level must also do so for disabled children.

Section 613—Local Educational Agency Eligibility

Topic Addressed: Charter Schools

• Letter dated March 31, 2000 to New York State Education Department Deputy Commissioner Lawrence Gloeckler, clarifying that an LEA is not required to distribute Part B of IDEA flow-through funds to charter schools that are not established as LEAs or as public schools of the LEA.

Section 615—Procedural Safeguards

Topic Addressed: Student Discipline

• Letter dated February 4, 2000 to individual, (personally identifiable information redacted), regarding options available to school authorities in appropriately educating a disabled student whose continued presence in a classroom may pose a threat to school safety.

• Letter dated February 4, 2000 to U.S. Congressman Ronnie Shows, regarding a perceived disparity in procedures for disciplining disabled and nondisabled students, and providing an explanation of the requirements of the IDEA Amendments of 1997 that govern disciplining disabled students.

• Letter dated February 16, 2000 to individual, (personally identifiable information redacted), regarding options available to school authorities in disciplining students with disabilities.

• Letter dated March 15, 2000 to individual, (personally identifiable information redacted), regarding options available to parents in resolving disagreements with a school district over the requirements of Part B of IDEA even if criminal charges are pending against a student, and explaining that (1) Part B of IDEA does not prohibit a State or local school district from reporting a crime committed by a student with a disability to appropriate State law enforcement or judicial authorities, and (2) a hearing officer is not considered an employee of a local school district merely because the hearing officer is paid to conduct the hearing.

• Letter dated March 15, 2000 to Louisiana State Superintendent Cecil Picard, clarifying that (1) the statutory provision requiring a school district to ask a hearing officer, in lieu of permitting school officials unilaterally, to order the removal of a child who is potentially dangerous to an appropriate interim alternative educational setting for up to 45 days strikes an appropriate balance between the need to provide school officials increased flexibility in dealing with school safety while maintaining due process and procedural protections for children with disabilities and their parents, and (2) regardless of available Federal special education funding, States have flexibility in accessing existing State and Federal programs to fund special education services.

Part C: Infants and Toddlers With Disabilities

Sections 631–641

Topic Addressed: Natural Environments

• Letters dated March 21, 2000 to U.S. Senator Dianne Feinstein, responding to separate inquiries from constituents, regarding the history and changes to the natural environments requirements of Part C of IDEA since the law was originally enacted, and clarifying that the need for parent networking and parent training could be addressed through the provision of appropriate services in the child's individualized family services plan (IFSP).

• Letter dated March 21, 2000 to U.S. Congressman Mike Thompson, regarding the history of and changes to the natural environments provisions of Part C of IDEA and the requirement that decisions about the provision of required early intervention services in natural environments must be individually determined by the child's IFSP team, and clarifying that determinations regarding services, including services for parents and the location of services to a child, are made by the child's IFSP team.

• Letter dated March 21, 2000 to U.S. Congresswoman Lynn Woolsey, regarding the natural environments provision of Part C of IDEA, and clarifying, in general, that providing services to an infant or toddler with a disability in a setting such as a center-based program that is limited exclusively to infants and toddlers with disabilities would not constitute a

natural environment, but that early intervention services may be provided in a center-based program serving only children with disabilities, if the IFSP team justifies in the IFSP that this location is necessary to meet the individual needs of a child for a particular service.

Section 640—Payor of Last Resort

Topic Addressed: Use of Family's Public and Private Insurance for Early Intervention Services

• Letter dated March 22, 2000 to Illinois Department of Human Services Director of Community Health and Prevention James R. Nelson, explaining that (1) with respect to the use of a family's private insurance for services under Part C of IDEA, pending further regulatory action, the Department will accept a State's reasonable interpretation of Part C of IDEA, including OSEP's prior policy letters and the position set out in the Department's Notice of Proposed Rulemaking on this issue; (2) with respect to the use of public insurance, Part C of IDEA funds are the payor of last resort; and (3) if a family does not permit access to its Medicaid payments, Part C of IDEA requires that a State ensure that the inability of a family to pay for required services does not result in the denial of services under Part C of IDEA to the child or to the child's family.

Part D: National Activities To Improve Education of Children With Disabilities

Subpart 1—State Program Improvement Grants for Children With Disabilities

Section 653—Applications

Topic Addressed: Information About State Program Improvement Grants

• Letter dated March 24, 2000 to individual, (personally identifiable information redacted), clarifying that (1) State Program Improvement Grants, authorized by Part D of IDEA, are discretionary grants that are not intended to provide direct services to children with disabilities, and (2) Part D of IDEA does not require a State to establish its own regulations to administer this grant program.

Miscellaneous

Topic Addressed: Inapplicability of the Least Restrictive Environment and Discipline Requirements of Part B of IDEA to College Students

• Letter dated February 10, 2000 to individual, (personally identifiable information redacted), clarifying that the least restrictive environment (LRE) and discipline provisions of Part B of IDEA do not apply to college students since the Part B of IDEA regulations provide that a disabled student's graduation from high school with a regular high school diploma ends the student's entitlement to FAPE, and noting that some of the issues regarding the provision of postsecondary services to students with disabilities may be within the jurisdiction of the Department's Office for Civil Rights.

Electronic Access to This Document

You may view this document, as well as all other Department of Education documents published in the **Federal Register**, in text or Adobe Portable Document Format (PDF) on the Internet at either of the following sites:

http://ocfo.ed.gov/fedreg.htm
http://www.ed.gov/news.html

To use the PDF you must have the Adobe Acrobat Reader MAS, which is available free at either of the previous sites. If you have questions about using the PDF, call the U.S. Government Printing Office (GPO), toll free, at 1–800–293–6498; or in the Washington, DC, area at (202) 512–1530.

Note: The official version of this document is the document published in the **Federal Register**. Free Internet access to the official edition of the **Federal Register** and the Code of Federal Regulations is available on GPO Access at: http://www.access.gpo.gov/nara/index.html

(Catalog of Federal Domestic Assistance Number 84.027, Assistance to States for Education of Children with Disabilities)

Dated: May 31, 2000.

Curtis L. Richards,

Acting Assistant Secretary for Special Education and Rehabilitative Services.

[FR Doc. 00–14074 Filed 6–5–00; 8:45 am]

BILLING CODE 4000–01–U

Federal Register

Tuesday,
June 6, 2000

Part VI

Department of Housing and Urban Development

24 CFR Part 902
Public Housing Assessment System (PHAS): Technical Correction; Final Rule
Public Housing Assessment System (PHAS); Transition Assistance for Certain PHAs; Notice

DEPARTMENT OF HOUSING AND URBAN DEVELOPMENT

24 CFR Part 902

[Docket No. FR–4497–C–06]

RIN 2577–AC08

Public Housing Assessment System (PHAS): Technical Correction

AGENCY: Office of the Assistant Secretary for Public and Indian Housing, and Office of the Director of the Real Estate Assessment Center, HUD.

ACTION: Technical correction.

SUMMARY: On January 11, 2000, HUD published a final rule that made certain amendments to the Public Housing Assessment System regulations, issued as final regulations by HUD on September 1, 1998. This document makes certain technical and editorial corrections to the January 11, 2000, final rule. Elsewhere in this edition of the **Federal Register**, HUD is publishing a notice concerning additional PHAS transition assistance for certain PHAs.

DATES: Effective Date: February 10, 2000.

FOR FURTHER INFORMATION CONTACT: For further information contact the Real Estate Assessment Center (REAC), Attention: Wanda Funk, U. S. Department of Housing and Urban Development, 1280 Maryland Avenue, SW, Suite 800, Washington DC, 20024; telephone Technical Assistance Center at (888) 245–4860 (this is a toll free number). Persons with hearing or speech impairments may access that number via TTY by calling the Federal Information Relay Service at (800) 877–8339. Additional information is available from the REAC Internet Site, http://www.hud.gov/reac.

SUPPLEMENTARY INFORMATION:

I. Background

On January 11, 2000 (65 FR 1712), HUD issued a final rule that made certain amendments to the Public Housing Assessment System (PHAS) regulations. The PHAS was implemented by final regulations published on September 1, 1998. The amendments published to the PHAS regulations on January 11, 2000, followed a proposed rule published on June 22, 1999, and the amendments were prompted by both statutory and administrative changes to the PHAS. The Quality Housing and Work Responsibility Act of 1998 (Pub.L. 105–276, approved October 21, 1998) (referred to as the ''Public Housing Reform Act'') made certain amendments to section 6(j) of the U.S. Housing Act of 1937, which necessitated changes to the PHAS regulations. Additionally, HUD determined that certain changes were needed to the regulations as a result of the transition period to the new PHAS that HUD provided following issuance of the September 1, 1998, final rule. The September 1, 1998 final rule did not provide for immediate implementation of PHAS, but rather provided for a year's transition period in which HUD tested its PHAS systems, provided advisory scores, and continued discussions and meetings with public housing agencies (PHAs) and residents, and their respective representatives about the PHAS. As a result of this transition period, extended by HUD at the request of PHAs, and discussions and meetings which continued well into the fall and winter of 1999, HUD determined certain changes were needed. The changes, both statutory and regulatory were discussed in the preambles to the June 22, 1999, proposed rule, and the January 11, 2000, final rule.

II. Technical Corrections

This document corrects certain errors that appeared in the January 11, 2000 final rule. Three primary corrections are made by this document:

• First, in § 902.43, HUD reinstates ''vacant unit turnaround time'' as a Management Operations sub-indicator.

In the preamble to the January 11, 2000, final rule, HUD advised that it was persuaded by public comment on the proposed rule and discussions with PHAs that assessing vacancy rate under the Management Operations Indicator was duplicative of assessing ''occupancy loss'' and ''tenant receivable outstanding'' under the Financial Condition Indicator. HUD therefore agreed that the vacancy rate sub-indicator under the Management Operations Indicator would be removed. (See discussion at 65 FR 1716). In removing ''vacancy rate'' from § 902.43, HUD inadvertently also removed ''vacant unit turnaround time.'' These two components were combined together as one sub-indicator under PHAS (just as they had been under the predecessor system—the Public Housing Management Assessment Program (PHMAP)). Vacant unit turnaround time is a statutorily required indicator and is not covered by any other sub-indicator in either the Financial Condition Indicator or the Management Operations Indicator, and the removal of this sub-indicator was not part of the discussions between HUD and the PHAs, nor was vacant unit turnaround time raised by public commenters on the June 22, 1999, proposed rule as an assessment component found under more than one PHAS Indicator (again, as was the case with vacancy rate).

HUD is therefore reinstating this sub-indicator through this correction document. In revised § 902.43, HUD makes the vacant unit turnaround time the first sub-indicator, and the remaining sub-indicators are redesignated accordingly. For the convenience of the reader, the entire section is republished, as corrected.

• Second, the Board of Review process provided in § 902.69 is applicable to appeal of PHAS scores, and not just to appeal of troubled designation or petition for removal of troubled designation. This was made clear in the preamble discussion at page 1728, third column, continuing on page 1729, first column. In this discussion, in response to a comment from the public that the appeal process did not allow for reviewing of the scoring process itself, and the process was too abbreviated, HUD responded by referring to the process in § 902.69, and noted that this appeal process provides for referral to the Board of Review.

HUD, therefore, revises the language in § 902.69 to clarify that this process is applicable to appeal of PHAS scores, consistent with the discussion in the preamble.

• Third, with the extension of advisory scores to PHAs with fiscal years ending March 31, 2000, HUD has corrected this section to reflect implementation of PHAS begins with PHAs with fiscal years ending on and after June 30, 2000, and to allow for flexibility if further changes are considered necessary that will not require another correction or amendment to the rule.

Other corrections made by this document are as follows:

• In § 902.20, HUD removes in paragraph (b)(2) the reference to the assessment of vacant units under the Management Operations Indicator. (See 65 FR 1741, first column.) In the January 11, 2000, final rule, HUD determined that unit vacancy only would be assessed by the occupancy loss sub-indicator under the Financial Condition Indicator. Therefore this reference is incorrect.

• In § 902.20, the regulatory reference in paragraph (c) should be § 902.43(a), not § 902.43(a)(5). (See 65 FR 1741, first column.) HUD corrects this cross-reference.

• In § 902.25, HUD replaces the word ''latest'' in paragraph (b)(2)(ii) which appears before the term ''census data'' with the word ''most recent.'' (See 65 FR 1743, first column.) HUD believes that

the phrase ''most recent'' is a more clear description of the type of census data needed.

• In § 902.25, HUD clarifies in paragraph (c)(3) that adjustments for modernization work-in-progress are not limited to units but encompass modernization work-in-progress being undertaken in other areas in a PHA's development, which areas are subject to physical inspection by HUD. (See 65 FR 1744, first column.)

• In § 902.35, HUD corrects the definition of ''Tenant Receivable Outstanding'' to further clarify its meaning.

• In § 902.43, the use of the term ''unobligated'' in the first sentence of paragraph (a)(1) is incorrect. (See 65 FR 1745, third column.) The correct term should be ''unexpended.'' HUD makes this correction.

• In § 902.43, the regulatory reference in paragraph (b)(1) should be to § 902.60(d), not 902.69(d). (See 65 FR 1746, middle column.) HUD corrects this cross-reference.

• In § 902.45, HUD clarifies that a PHA that receives less than 60 percent of the maximum calculation for the Capital Fund subindicator under PHAS Indicator #3 (Management Operations) is troubled with respect to program assistance under the Capital Fund. (See 65 FR 1746, end of middle column, top of third column.) This is clearly stated in § 902.67(c)(2)(ii), but should also be stated in § 902.45.

• In § 902.60, paragraph (e)(2) is amended to clarify that a PHA's failure to submit a certification required under the PHAS regulations or to submit year-end financial information will result in a score of zero only for the PHAS Indicator for which the certification or financial information is required and not received. Without this correction, the rule indicates that the PHA would receive a score of zero for all of the PHAS Indicators which require certifications, even if certifications are received for some of them. (See 65 FR 1748, first column.)

This section is also amended to clarify that HUD may not extend the reporting deadline for audited financial statements. OMB Circular A–133 provides that an audited financial statement must be submitted within nine months after an entity's fiscal year-end. This deadline may not be extended by HUD, and the revised language clarifies this.

• In § 902.67, the regulatory reference in paragraph (c)(2)(ii) should be to § 902.43(a), not § 902.43(a)(2). (See 65 FR 1749, first column.) HUD corrects this cross-reference.

• In § 902.69, HUD replaces the term ''final PHAS score'' in the first sentence of paragraph (c)(1)) with the term ''overall PHAS score.'' (See 65 FR 1750, middle column.) As stated in § 902.63(c), a PHA's overall PHAS score becomes its final PHAS score after any adjustments are made in accordance with the regulatory provisions and following the appeals process provided in § 902.69.

• In § 902.77, the regulatory reference in the second sentence of paragraph (a)(1) should be § 902.79, not § 902.69. (See 65 FR 1753, first column.) HUD corrects this cross-reference.

In § 902.79, the reference in paragraph (b)(1)(iv) to ''paragraph (a) of this section'' is incorrect. (See 65 FR 1753, third column.) The reference should be to ''paragraph (b)(4) of this section.'' HUD corrects this reference.

III. Responses to Post-Final Rule Questions

In addition to the regulatory changes described above, other issues or concerns were raised to HUD after publication of the January 11, 2000, final rule, as follows.

HUD was asked to correct the January 11, 2000, final rule to include a definite period of time in which HUD must respond to a request for an appeal. HUD points out that § 902.69(e) provides that HUD will make final decisions of appeals within 30 days of receipt of an appeal, and may extend this period for an additional 30 days if further inquiry is necessary. No correction is needed since the rule does address this issue.

HUD was asked how a PHA designated as troubled under PHMAP and in receivership can obtain an acceptable PHMAP rating to get out of receivership since there are no more PHMAP ratings. As noted in the preamble to the first PHAS rule issued in 1998, and discussed in other PHAS notices and the 1999 rule, PHAS Indicator #3 (Management Operations) covers the majority of areas covered by PHMAP. As noted in the PHAS Transition Notice, published on October 21, 1999 (64 FR 56676), PHAs with fiscal years ending September 30, 1999, or December 31, 1999, will receive an assessment score solely on the basis of HUD's assessment of the PHA's management operations in accordance with 24 CFR part 902, subpart D of the PHAS regulations (PHAS Indicator #3, Management Operations). (See 64 FR 56677, middle column). As the October 21, 1999, notice provided, PHAs with fiscal years ending on or after March 31, 2000, will receive a PHAS score; and therefore, either an assessment score under PHAS Indicator #3, for PHAs with fiscal years ending September 30, 1999, or December 31, 1999, or a PHAS score for PHAs with fiscal years ending on or after March 31, 2000, take the place of the PHMAP score. (As noted earlier, and as discussed further below, PHAS advisory scores are extended to PHAs with fiscal years ending on March 31, 2000, and the October 21, 1999, and December 16, 1999, PHAS Transition Assistance Notices are revised by this document.) HUD also was asked about a statement in the preamble concerning HUD's discussions with GAO concerning the GAO report on its analysis of the PHAS. (See 65 FR 1713, first column.) HUD acknowledges that this preamble language requires clarification. At the time the Conference Report to the FY 2000 HUD Appropriations Act was issued (October 13, 1999), GAO's planned review of the physical inspection process focused only on HUD's multifamily housing, not public housing. Although, GAO subsequently expanded the scope of its review to include public housing, GAO acknowledged that its analysis of implementation of PHAS in public housing and compilation of a report would take several months. Postponing implementation of PHAS until the GAO report was completed would have caused a significant delay. HUD advised both GAO and Congressional staff before publication of the January 11, 2000, final rule that HUD would proceed with its PHAS implementation plans. When the GAO report is complete, HUD will examine the GAO findings and make any changes to the PHAS physical inspection process that will refine and improve this system.

IV. Related Document—Notice on Additional Transition Assistance

HUD also was asked to provide further transition assistance to certain PHAs. Please see HUD's notice published elsewhere in this edition of the **Federal Register** that addresses PHAS transition assistance for certain PHAs.

List of Subjects in 24 CFR Part 902

Administrative practice and procedure, Public housing, Reporting and recordkeeping requirements.

Accordingly, 24 CFR part 902 is corrected by making the following correcting amendments:

PART 902—PUBLIC HOUSING ASSESSMENT SYSTEM

1. The authority citation for 24 CFR part 902 continues to read as follows:

Authority: 42 U.S.C. 1437d(j), 42 U.S.C. 3535(d).

2. Revise § 902.5 to read as follows.

§ 902.5 Applicability.

(a) *PHAs, RMCs, AMEs.* (1) *Scoring of RMCs and AMEs.* This part applies to PHAs, Resident Management Corporations (RMCs) and Alternate Management Entities (AMEs), as described in this section. As described in this section, this part is also applicable to RMCs that receive direct funding from HUD in accordance with section 20 of the 1937 Act (DF–RMCs).

(i) RMCs and DF–RMCs will be assessed and issued their own numeric scores under the PHAS based on the public housing developments or portions of public housing developments that they manage and the responsibilities they assume which can be scored under PHAS. References in this part to PHAs include RMCs and this part is applicable to RMCs unless stated otherwise. References in this part to RMCs include DF–RMCs and this part is applicable to DF–RMCs unless otherwise stated.

(ii) AMEs are not issued PHAS scores. The performance of the AME contributes to the PHAS score of the PHA or PHAs for which they assumed management responsibilities.

(2) *PHA ultimate responsible entity under ACC, except where DF–RMC assumes management operations.* (i) Because the PHA and not the RMC/AME is ultimately responsible to HUD under the ACC, the PHAS score of a PHA will be based on all of the developments covered by the ACC, including those with management operations assumed by an RMC or AME (including a court ordered receivership agreement, if applicable).

(ii) A PHA's PHAS score will not be based on developments managed by a DF–RMC.

(b) *Implementation of PHAS.* The regulations in this part are applicable to PHAs with fiscal years ending on and after June 30, 2000, unless HUD, through **Federal Register**, notice revises the implementation date to later date.

(1) *For PHAs that are not issued PHAS scores.* Under certain circumstances, PHAs may not be issued PHAS scores. For these PHAs, in lieu of a PHAS score, HUD will issue the following:

(i) *PHAS Advisory Score.* A PHA will be issued a PHAS advisory score for all PHAS indicators—Indicators #1 (Physical), #2 (Financial), #3 (Management Operations), and #4 (Resident Service and Satisfaction). The PHA must comply with the requirements of this part so that HUD may issue the advisory score. Physical inspections required to be conducted by PHAs under the Management Operations Indicator will be conducted using HUD uniform physical inspection protocol, unless HUD provides, through **Federal Register** notice, that PHAs may use HUD's Housing Quality Standards.

(ii) *Management Assessment Score.* A PHA will receive an assessment score on the basis of HUD's assessment of the PHA's management operations in accordance with subpart D of this part.

3. In § 902.20, revise paragraphs (b)(2) introductory text and (c) to read as follows:

§ 902.20 Physical condition assessment.

* * * * *

(b) * * *

(2) Only occupied units will be inspected as dwelling units (except units approved by HUD for non-dwelling purposes, e.g., daycare or meetings, which are inspected as common areas). Vacant units that are not under lease at the time of the physical inspection will not be inspected, but vacant units are assessed under the Financial Condition Indicator #2 (§ 902.35(b)(4)). The categories of vacant units not under lease that are exempted from physical inspection are as follows:

* * * * *

(c) *PHA physical inspection requirement.* The HUD-conducted physical inspections required by this part do not relieve the PHA of the responsibility to inspect public housing units as provided in section 6(f)(3) of the Act (42 U.S.C. 1437d(f)(3)), and § 902.43(a).

* * * * *

4. In § 902.25, revise paragraphs (b)(2)(ii), (c)(3) introductory text, and (c)(3)(i) to read as follows:

§ 902.25 Physical condition scoring and thresholds.

* * * * *

(b) * * *

(2) * * *

(ii) Neighborhood environment applies to properties located where the immediate surrounding neighborhood (that is a majority of the population that resides in the census tracts or census block groups on all sides of the development) has at least 51 percent of families with incomes below the poverty rate as documented by the most recent census data.

* * * * *

(c) * * *

(3) *Adjustments for modernization work in progress.* HUD may determine that an occupied dwelling unit or other areas of a PHA development, subject to physical inspection under this subpart, which are undergoing modernization work in progress require an adjustment to the physical condition score.

(i) An occupied dwelling unit or other areas of a PHA development undergoing modernization are subject to physical inspection; the unit and other areas of the PHA development are not exempt from physical inspection. All elements of the unit or of the other areas of the PHA development that are subject to inspection and are not undergoing modernization at the time of the inspection (even if modernization is planned) will be subject to HUD's physical inspection protocol without adjustment. For those elements of the unit or of the development that are undergoing modernization, deficiencies will be noted in accordance with HUD's physical inspection protocol, but the PHA may request adjustment of the physical condition score as a result of modernization work in progress.

* * * * *

5. In § 902.35, revise paragraph (b)(3) to read as follows:

§ 902.35 Financial condition scoring and thresholds.

* * * * *

(b) * * *

(3) *Tenant Receivable Outstanding* is the average number of days tenant receivables are outstanding and it is calculated by dividing tenant accounts receivable by Daily Tenant Revenue (rental revenue/365).

* * * * *

6. Revise § 902.43 to read as follows:

§ 902.43 Management operations performance standards.

(a) *Management operations sub-indicators.* The following sub-indicators listed in this section will be used to assess a PHA's management operations. The components and grades for each sub-indicator are the same as those provided in Appendix 1 to the PHAS Notice on the Management Operations Scoring Process, except as may be otherwise noted in this subpart.

(1) *Management sub-indicator #1—Vacant Unit Turnaround Time.* This sub-indicator measures the PHA's efforts to reduce unit turnaround time and assesses the adequacy of the PHA's system to track unit down time, make ready time and lease up time.

(2) *Management sub-indicator #2—Capital Fund.* This management sub-indicator examines the amount and percentage of funds provided to the PHA from the Capital Fund under section 9(d) of the Act, which remain unexpended by the PHA after three years, the timeliness of fund obligation,

the adequacy of contract administration, the quality of the physical work, and the adequacy of budget controls. For funding under the HOPE VI Program, only components #3, #4, and #5 of this sub-indicator are applicable. This management sub-indicator is automatically excluded if the PHA does not have section 9(d) capital funding.

(3) *Management sub-indicator #3—Work Orders.* This management sub-indicator examines the time it takes to complete or abate emergency work orders, the average number of days nonemergency work orders were active, and any progress a PHA has made during the preceding three years to reduce the period of time nonemergency maintenance work orders were active. Implicit in this management sub-indicator is the adequacy of the PHA's work order system in terms of how a PHA accounts for and controls its work orders, and its timeliness in preparing/issuing work orders.

(4) *Management sub-indicator #4—PHA Annual Inspection of Units and Systems.* This management sub-indicator examines the percentage of units and systems that a PHA inspects on an annual basis in order to determine short-term maintenance needs and long-term Capital Fund needs. This management sub-indicator requires a PHA's inspection to utilize the HUD uniform physical condition standards set forth in subpart B of this part. All occupied units are required to be inspected.

(5) *Management sub-indicator #5—Security.* (i) This management sub-indicator evaluates the PHA's performance in tracking crime related problems in their developments; reporting incidence of crime to local law enforcement agencies; the adoption and implementation, consistent with section 6(j)(1)(I) (42 U.S.C. 1437d(j)(1)(I)), of applicant screening and resident eviction policies and procedures, and other anticrime strategies; coordination with local government officials and residents in the development on implementation of such strategies; and as applicable, PHA performance under any HUD drug prevention/crime reduction grants.

(ii) Paragraph (a) of this section provides that the components and grades for each sub-indicator are the same as those for the corresponding indicator provided in Appendix 1 to the PHAS Notice on the Management Operations Scoring Process, except as may be otherwise noted. For Component #1, Tracking and Reporting Crime Related Problems, the following will be used to describe a Grade of A: The PHA Board, by resolution, has adopted policies and the PHA has implemented procedures and can document that it:

(A) Tracks crime and crime-related problems in at least 90 percent of its developments;

(B) Has a cooperative system for tracking and reporting incidents of crime to local police authorities to improve law enforcement and crime prevention; and

(C) Coordinates with local government officials and its residents on the implementation of anticrime strategies.

(6) *Management sub-indicator #6—Economic Self-Sufficiency.* The economic self-sufficiency sub-indicator measures the PHA's efforts to coordinate, promote or provide effective programs and activities to promote the economic self-sufficiency of residents. For this sub-indicator, PHAs will be assessed for all the programs that the PHA has HUD funding to implement. Also, PHAs will receive credit for implementation of programs through partnerships with non-PHA providers, even if the programs are not funded by HUD or the PHA.

(b) *Reporting on performance under the Management Operations Indicator.* (1) A PHA is required to submit electronically a certification of its performance under each of the management operations sub-indicators in accordance with § 902.60(d).

(2) If circumstances preclude a PHA from reporting electronically, HUD will consider granting short-term approval to allow a PHA to submit its management operations certification manually. A PHA that seeks approval to submit its certification manually must ensure that REAC receives a request for manual submission in writing two months prior to the submission due date of its Management Operations certification. The written request must include the reasons why the PHA cannot submit its certification electronically. REAC will respond to such a request and will manually forward its determination in writing to the PHA.

7. In § 902.45, paragraph (b) is revised to read as follows:

§ 902.45 Management operations scoring and thresholds.

* * * * *

(b) *Thresholds.* (1) In order to receive a passing score under the Management Operations Indicator, the PHA must achieve a score of at least 18 points or 60 percent of the available points under this PHAS Indicator #3. If the PHA fails to receive a passing score on the Management Operations Indicator, the PHA shall be categorized as a substandard management agency.

(2) A PHA that receives less than 60 percent of the maximum calculation for the Capital Fund subindicator under Management Operations Indicator, shall be subject to the sanctions provided in section 6(j)(4) of the Act (see § 902.67(c)(2)(ii).)

8. In § 902.60, paragraph (e)(2) is revised to read as follows:

§ 902.60 Data collection.

* * * * *

(e) * * *

(2) If any certification or year-end financial information, with the exception of the PHA's audited financial statement, is not received within three months after the due date, the PHA will receive a presumptive rating of failure for each PHAS Indicator for which the certification or year-end financial information is not received. The PHA's audited financial statement must be received no later than 9 months after the PHA's fiscal year-end, in accordance with OMB Circular A–133 (see § 902.33(c)). If the audited financial statement is not received by that date, the PHA will receive a presumptive rating of failure for the PHAS Financial Indicator. If the PHA receives a presumptive rating failure for any PHAS Indicator due to failure to submit a certification or year-end financial information by the due date, including any extension of the due date, as provided in this paragraph (except for the audited financial statement for which the due date is established by OMB Circular A–133), the PHA shall be designated as troubled or identified as troubled with respect to the program for assistance from the Capital Fund under section 9(d) of the Act.

9. In § 902.67, revise paragraph (c)(2)(ii) to read as follows:

§ 902.67 Score and designation status.

* * * * *

(c) * * *

(2) * * *

(ii) In accordance with section 6(j)(2) of the Act, a PHA that receives less than 60 percent of the maximum calculation for the Capital Fund sub-indicator under PHAS Indicator #3 (Management Operations, subpart D of this part; see § 902.43(a)) will be subject to the sanctions, provided in section 6(j)(4), as appropriate.

* * * * *

10. Revise § 902.69 to read as follows:

§ 902.69 PHA right of petition and appeal.

(a) *Appeal of troubled designation and petition for removal troubled designation.* A PHA may:

(1) Appeal its troubled designation (including designation as troubled with

respect to its performance under the Capital Fund subindicator as provided in § 902.67(c)(2)); and

(2) Petition for removal of troubled designation.

(b) *Appeal of PHAS score.* If a PHA believes that an objectively verifiable and material error (or errors) exists in any of the scores for its PHAS Indicators, which, if corrected, will result in a significant change in the PHA's PHAS score and its designation (*i.e.,* as troubled, standard, or high performer), the PHA may appeal its PHAS score in accordance with the procedures of paragraphs (c), (d) and (e) of this section. A significant change in a PHAS score is a change that would cause the PHA's PHAS score to increase, resulting in a higher PHAS designation for the PHA (i.e., from troubled performer to standard performer, or from standard performer to high performer).

(c) *Appeal and petition procedures.* (1) To appeal troubled designation or a PHAS score, a PHA must submit a request in writing to the Director of the Real Estate Assessment Center that must be received by REAC no later than 30 days following the issuance of the overall PHAS score to the PHA. To petition removal of troubled designation, a PHA also must submit its request in writing to the Director of the Real Estate Assessment Center. The written request must be received by REAC no later than 30 days after HUD's decision to refuse to remove the PHA's troubled designation.

(2) An appeal of troubled designation or petition for removal of troubled designation must include the PHA's supporting documentation and reasons for the appeal. An appeal of a PHAS score must be accompanied by the PHA's reasonable evidence that an objectively verifiable and material error occurred. An appeal submitted to REAC without appropriate documentation will not be considered and will be returned to the PHA.

(d) *Consideration of appeal.* (1) *Consideration of appeal of PHAS score.* Upon receipt of an appeal of a PHAS score from a PHA, REAC will review the PHA's file and the evidence submitted by the PHA to support that an error occurred. If REAC determines that an objectively verifiable and material error has been documented by the PHA, REAC will convene a Board of Review, in accordance with the procedures of paragraphs (d) and (e) of this section, to evaluate the appeal and its merits for purposes of determining whether a reassessment of the PHA is warranted. For appeal of PHAS scores, the Board of Review may determine that REAC should undertake a new inspection of the property, and/or a reexamination of the financial information, management information, or resident information (the components of the PHAS score), depending upon which PHAS Indicator the PHA believes was scored erroneously and the type of evidence submitted by the PHA to support its position that an error occurred.

(2) *Consideration of appeal of troubled designation or refusal to remove troubled designation.* Upon receipt of an appeal of a troubled designation from a PHA, REAC will convene a Board of Review (the Board) to evaluate the appeal and its merits for the purpose of determining whether a reassessment of the PHA is warranted. Board membership will be comprised of a representative from REAC, from the Office of Public and Indian Housing, and from such other office or representative as the Secretary may designate (excluding, however, representation from the Troubled Agency Recovery Center). For purposes of reassessment, REAC will schedule a reinspection and/or acquire audit services, as determined by the Board, and a new score will be issued, if appropriate. Decisions by the Board will be reported to the PHA by the Assistant Secretary for Public and Indian Housing.

(e) *Final appeal decisions.* HUD will make final decisions of appeals, made under this section, within 30 days of receipt of an appeal, and may extend this period for an additional 30 days if further inquiry is necessary. Failure by a PHA to submit supporting documentation with its request for appeal, or within any additional period granted by HUD is grounds for denial of an appeal. Final appeal decisions will be reported to the PHA by the Assistant Secretary for Public and Indian Housing.

11. In § 902.77, revise paragraph (a)(1) to read as follows:

§ 902.77 Referral to the Departmental Enforcement Center (DEC).

(a) *Referral of Troubled PHA to the DEC for failing to execute or meet MOA requirements.* (1) Failure of a troubled PHA to execute or meet the requirements of a MOA in accordance with § 902.75 constitutes a substantial default under § 902.79 and may result in referral of the PHA to the DEC. The TARC will recommend to the Assistant Secretary for Public and Indian Housing that a troubled performer PHA be declared in substantial default. In accordance with § § 902.79, the Assistant Secretary shall notify the PHA of the default and allow the PHA an opportunity to cure the default. A PHA shall be referred to the DEC if the PHA fails to cure the default within the a period not to exceed 30 days unless the Assistant Secretary for Public and Indian Housing determines that a longer period is appropriate.

* * * * *

12. In § 902.79, revise paragraph (b)(1)(iv) to read as follows:

§ 902.79 Substantial default.

* * * * *

(b) * * *

(1) * * *

(iv) Notification to the PHA of a specific time period, to be not less than 10 calendar days, except in cases of apparent fraud or other criminal behavior, and/or under emergency conditions as described in paragraph (b)(4) of this section, nor more than 30 calendar days, during which the PHA shall be required to demonstrate that the determination or finding is not substantively accurate; and

* * * * *

Dated: May 26, 2000.

Harold Lucas,

Assistant Secretary for Public and Indian Housing.

Donald J. LaVoy,

Director, Real Estate Assessment Center.

[FR Doc. 00–14160 Filed 6–5–00; 8:45 am]

BILLING CODE 4210–33–P

DEPARTMENT OF HOUSING AND URBAN DEVELOPMENT

[Docket No. FR–4497–N–07]

RIN 2577–AC08

Public Housing Assessment System (PHAS) Notice of PHAS Transition Assistance for Certain PHAs

AGENCY: Office of the Assistant Secretary for Public and Indian Housing, and Office of the Director of the Real Estate Assessment Center, HUD.

ACTION: Notice.

SUMMARY: This document notifies public housing agencies (PHAs) with fiscal years ending March 31, 2000, and June 30, 2000, that they may conduct physical inspections of their units in accordance with HUD's Housing Quality Standards. Additionally, this notice advises that HUD extends advisory scores to PHAs with fiscal years ending March 31, 2000. Therefore, PHAS scores will be issued for PHAs with fiscal years ending on and after June 30, 2000.

FOR FURTHER INFORMATION CONTACT: For further information contact the Real Estate Assessment Center (REAC), Attention: Wanda Funk, U.S. Department of Housing and Urban Development, 1280 Maryland Avenue, SW, Suite 800, Washington DC, 20024; telephone Technical Assistance Center at (888)–245–4860 (this is a toll free number). Persons with hearing or speech impairments may access that number via TTY by calling the Federal Information Relay Service at (800) 877–8339. Additional information is available from the REAC Internet Site, http://www.hud.gov/reac.

SUPPLEMENTARY INFORMATION:

I. Background

On January 11, 2000 (65 FR 1712), HUD issued a final rule that made certain amendments to the Public Housing Assessment System (PHAS) regulations. The PHAS was implemented by final regulations published on September 1, 1998. The amendments published to the PHAS regulations on January 11, 2000, followed a proposed rule published on June 22, 1999, and were prompted by both statutory and administrative changes to the PHAS.

II. Additional Transition Assistance to Certain PHAs

Following publication of the January 11, 2000, final rule, HUD was asked to provide further transition assistance to PHAs with fiscal years ending March 31, 2000, and June 30, 2000, by allowing these PHAs to inspect occupied units in accordance with HUD's Housing Quality Standards (HQS). Under sub-indicator #3 of PHAS Indicator #3, Management Operations, PHAs are assessed on the percentage of units and systems that a PHA inspects on an annual basis in order to determine short-term maintenance needs and long-term Capital Fund needs. PHAs must inspect these units in accordance with HUD's Uniform Physical Condition Standards. In a notice published December 16, 1999 (64 FR 70274), HUD advised that PHAs with fiscal years ending September 30, 1999, and December 31, 1999, could inspect their units in accordance with HQS because HUD only recently released its physical inspection and training guidebook. HUD will extend the transition assistance provided in its December 16, 1999, notice to PHAs with fiscal years ending March 31, 2000, and June 30, 2000.

Additionally, HUD was requested to allow PHAs with fiscal years ending March 31, 2000, to receive PHAS advisory scores, given the date on which the PHAS Amendments final rule was issued—January 11, 2000. HUD agrees to issue PHAS advisory scores to PHAs with fiscal years ending March 31, 2000. PHAS scores will be issued to PHAs with fiscal years ending on or after June 30, 2000. As the October 21, 1999, PHAS Transition Notice clarified, however, HUD is required by statute to assess PHAs performance. PHAs with fiscal years ending March 31, 2000, will receive an assessment score solely on the basis of HUD's assessment of the PHA's management operations in accordance with 24 CFR part 902, subpart D of the PHAS regulations (PHAS Indicator #3, Management Operations), as amended by the January 11, 2000, final rule, and corrected by the correction document published elsewhere in this edition of the **Federal Register**.

III. PHAS Technical Correction

Elsewhere in this edition of the **Federal Register**, HUD is publishing a technical correction to the January 11, 2000 PHAS final rule.

Dated: March 30, 2000.

Harold Lucas,

Assistant Secretary for Public and Indian Housing.

Donald J. LaVoy,

Director, Real Estate Assessment Center.

[FR Doc. 00–14161 Filed 6–5–00; 8:45 am]

BILLING CODE 4210–33–P

Federal Register

Tuesday,
June 6, 2000

Part VII

The President

Proclamation 7316—Gay and Lesbian Pride Month, 2000

Federal Register
Vol. 65, No. 109
Tuesday, June 6, 2000

Presidential Documents

Title 3—

The President

Proclamation 7316 of June 2, 2000

Gay and Lesbian Pride Month, 2000

By the President of the United States of America

A Proclamation

Gay and lesbian Americans have made important and lasting contributions to our Nation in every field of endeavor. Too often, however, gays and lesbians face prejudice and discrimination; too many have had to hide or deny their sexual orientation in order to keep their jobs or to live safely in their communities.

In recent years, we have made some progress righting these wrongs. Since the Stonewall uprising in New York City more than 30 years ago, the gay and lesbian rights movement has united gays and lesbians, their families and friends, and all those committed to justice and equality in a crusade to outlaw discriminatory laws and practices and to protect gays and lesbians from prejudice and persecution.

I am proud of the part that my Administration has played to achieve these goals. Today, more openly gay and lesbian individuals serve in senior posts throughout the Federal Government than during any other Administration. To build on our progress, in 1998 I issued an Executive Order to prohibit discrimination in the Federal civilian workforce based on sexual orientation, and my Administration continues to fight for the Employment Non-Discrimination Act, which would outlaw discrimination in the workplace based on sexual orientation.

Yet many challenges still lie before us. As we have learned from recent tragedies, prejudice against gays and lesbians can still erupt into acts of hatred and violence. I continue to call upon the Congress to pass meaningful hate crimes legislation to strengthen the Department of Justice's ability to prosecute hate crimes committed due to the victim's sexual orientation.

With each passing year the American people become more receptive to diversity and more open to those who are different from themselves. Our Nation is at last realizing that gays and lesbians must no longer be ''strangers among friends,'' as the civil rights pioneer David Mixner once noted. Rather, we must finally recognize these Americans for what they are: our colleagues and neighbors, daughters and sons, sisters and brothers, friends and partners.

This June, recognizing the joys and sorrows that the gay and lesbian movement has witnessed and the work that remains to be done, we observe Gay and Lesbian Pride Month and celebrate the progress we have made in creating a society more inclusive and accepting of gays and lesbians. I hope that in this new millennium we will continue to break down the walls of fear and prejudice and work to build a bridge to understanding and tolerance, until gays and lesbians are afforded the same rights and responsibilities as all Americans.

NOW, THEREFORE, I, WILLIAM J. CLINTON, President of the United States of America, by virtue of the authority vested in me by the Constitution and laws of the United States, do hereby proclaim June 2000 as Gay and Lesbian Pride Month. I encourage all Americans to observe this month with appropriate programs, ceremonies, and activities that celebrate our diversity and recognize the gay and lesbian Americans whose many and varied contributions have enriched our national life.

IN WITNESS WHEREOF, I have hereunto set my hand this second day of June, in the year of our Lord two thousand, and of the Independence of the United States of America the two hundred and twenty-fourth.

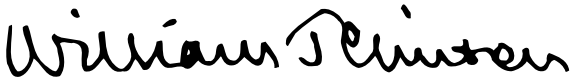

[FR Doc. 00–14440
Filed 6–5–00; 11:25 am]
Billing code 3195–01–P

Reader Aids

Federal Register

Vol. 65, No. 109

Tuesday, June 6, 2000

CUSTOMER SERVICE AND INFORMATION

Federal Register/Code of Federal Regulations

General Information, indexes and other finding aids	**202–523–5227**
Laws	**523–5227**
Presidential Documents	
Executive orders and proclamations	**523–5227**
The United States Government Manual	**523–5227**
Other Services	
Electronic and on-line services (voice)	**523–4534**
Privacy Act Compilation	**523–3187**
Public Laws Update Service (numbers, dates, etc.)	**523–6641**
TTY for the deaf-and-hard-of-hearing	**523–5229**

ELECTRONIC RESEARCH

World Wide Web

Full text of the daily Federal Register, CFR and other publications:

http://www.access.gpo.gov/nara

Federal Register information and research tools, including Public Inspection List, indexes, and links to GPO Access:

http://www.nara.gov/fedreg

E-mail

PENS (Public Law Electronic Notification Service) is an E-mail service for notification of recently enacted Public Laws. To subscribe, send E-mail to

listserv@www.gsa.gov

with the text message:

subscribe PUBLAWS-L your name

Use listserv@www.gsa.gov only to subscribe or unsubscribe to PENS. We cannot respond to specific inquiries.

Reference questions. Send questions and comments about the Federal Register system to:

info@fedreg.nara.gov

The Federal Register staff cannot interpret specific documents or regulations.

FEDERAL REGISTER PAGES AND DATE, JUNE

34913–35258 1
35259–35560 2
35561–35806 5
35807–36052 6

CFR PARTS AFFECTED DURING JUNE

At the end of each month, the Office of the Federal Register publishes separately a List of CFR Sections Affected (LSA), which lists parts and sections affected by documents published since the revision date of each title.

3 CFR

Proclamations:
7316 36051

Executive Orders:
February 26, 1852 (Revoiled in Part by PLO 7447) 35390
13087 (See Proclamation 7316) 36051

5 CFR

890 35259

7 CFR

28 35807
301 35261
915 35561
930 35265
1160 35808

Proposed Rules:
54 35857
928 35590
1216 35298

10 CFR

50 34913
1703 35810

12 CFR

40 35162
216 35162
332 35162
573 35162
745 34921

13 CFR

121 35810

14 CFR

25 35813
39 ..... 34926, 34928, 34932, 34935, 34938, 34941, 35267, 35270, 35563, 35566, 35814, 35817, 35819
71 ..... 35272, 35822
73 35273
91 35703
97 ..... 35274, 35275
129 35703
187 36002

Proposed Rules:
39 ..... 34993, 35590, 35869
71 ..... 35301, 35302, 35303

15 CFR

760 34942

Proposed Rules:
930 34995
922 35871

17 CFR

Proposed Rules:
1 35304

18 CFR

154 35706
161 35706
250 35706
284 35706

20 CFR

404 34950
416 34950

21 CFR

5 34959
312 34963
573 35823

24 CFR

902 36042

27 CFR

Proposed Rules:
9 35871

29 CFR

2520 35568
2584 35703

30 CFR

250 35824
914 35568

32 CFR

3 35576

33 CFR

117 ..... 35825, 35826
165 ..... 34971, 35278, 35279, 35827, 35832, 35838

34 CFR

361 35792

36 CFR

1260 34973
1280 ..... 34977, 35840

38 CFR

3 35280
17 35280
21 35280

40 CFR

52 ..... 35577, 35840
81 35577
132 35283

Proposed Rules:
52 35875
69 35430

80 35430
86 35430
180 35307
434 34996

41 CFR

51–8 35286
51–9 35286
51–10 35286
102-36 34983

42 CFR

403 34983
1001 35583
1003 35583
1005 35583
1006 35583

44 CFR

65 35584
67 35587

Proposed Rules:

67 ....35592, 35596

45 CFR

5b 34986

46 CFR

Proposed Rules:

110 35600
111 35600

47 CFR

73 ....34988, 34989, 34990, 34991, 35588

Proposed Rules:

20 35601
25 35312
73 ....34996, 34997, 34998

48 CFR

Ch. 1 ....36012, 36031
1 ....36014, 36015
2 36016
3 36030
4 ....36016, 36021
5 36030
7 36016
8 36023
9 36014
11 36016
13 36016
15 36014
22 36014
23 36016
25 ....36025, 36027
30 36028
35 36014
37 36014
38 36023
42 36014
47 36030
49 36030
52 ....36015, 36016, 36025, 36027, 36028
225 36034
230 36034

49 CFR

385 35287
390 35287
571 35427

Proposed Rules:

575 34998

50 CFR

635 35855
679 ....34991, 34992

Proposed Rules:

16 35314
17 ....35025, 35033, 35315
622 ....35040, 35316, 35877
635 35881

REMINDERS

The items in this list were editorially compiled as an aid to Federal Register users. Inclusion or exclusion from this list has no legal significance.

RULES GOING INTO EFFECT JUNE 6, 2000

AGRICULTURE DEPARTMENT

Agricultural Marketing Service

Avocados grown in—
- Florida; published 6-5-00

DEFENSE DEPARTMENT

Acquisition regulations:
- Cost accounting standards; waiver; published 6-6-00
- NAFTA procurement threshold; published 6-6-00

Federal Acquisition Regulation (FAR):
- Cost accounting standards coverage; applicability, thresholds, and waiver; published 6-6-00
- Federal Procurement Office policy letters; rescission; published 6-6-00
- Technical amendments; published 6-6-00
- Trade agreements thresholds; published 6-6-00

ENVIRONMENTAL PROTECTION AGENCY

Air programs; approval and promulgation; State plans for designated facilities and pollutants:
- Mississippi; published 4-7-00
- Pennsylvania; published 4-7-00
- Pennsylvania; correction; published 5-26-00

Air quality implementation plans; approval and promulgation; various States:
- Georgia; published 4-7-00

GENERAL SERVICES ADMINISTRATION

Federal Acquisition Regulation (FAR):
- Cost accounting standards coverage; applicability, thresholds, and waiver; published 6-6-00
- Federal Procurement Office policy letters; rescission; published 6-6-00
- Technical amendments; published 6-6-00
- Trade agreements thresholds; published 6-6-00

HEALTH AND HUMAN SERVICES DEPARTMENT

Food and Drug Administration

Animal drugs, feeds, and related products:
- Selenium yeast; published 6-6-00

INTERIOR DEPARTMENT

Minerals Management Service

Outer Continental Shelf; oil, gas, and sulphur operations:
- CFR subparts revision; sections assigned new section numbers; correction; published 6-6-00

NATIONAL AERONAUTICS AND SPACE ADMINISTRATION

Federal Acquisition Regulation (FAR):
- Cost accounting standards coverage; applicability, thresholds, and waiver; published 6-6-00
- Federal Procurement Office policy letters; rescission; published 6-6-00
- Technical amendments; published 6-6-00
- Trade agreements thresholds; published 6-6-00

TRANSPORTATION DEPARTMENT

Federal Aviation Administration

Airworthiness directives:
- Eurocopter France; published 5-22-00
- Israel Aircraft Industries, Ltd.; published 5-22-00
- McDonnell Douglas; published 5-2-00

COMMENTS DUE NEXT WEEK

AGRICULTURE DEPARTMENT

Agricultural Marketing Service

Commodity laboratory testing programs:
- Science and technology laboratory testing service fees; comments due by 6-15-00; published 5-26-00

Cranberries grown in—
- Massachusetts et al.; comments due by 6-14-00; published 5-30-00

Honey research, promotion, and consumer information order; comments due by 6-14-00; published 5-15-00

National Organic Program; comments due by 6-12-00; published 3-13-00

Onions grown in—
- Idaho and Oregon; comments due by 6-14-00; published 5-15-00

AGRICULTURE DEPARTMENT

Animal and Plant Health Inspection Service

Exportation and importation of animals and animal products:
- Livestock exported from U.S.; origin health certificates; inspection requirements; comments due by 6-16-00; published 4-17-00

Interstate transportation of animals and animal products (quarantine):
- Tuberculosis in cattle, bison, goats, and captive cervids—
  - State and area classifications; comments due by 6-16-00; published 5-31-00

AGRICULTURE DEPARTMENT

Commodity Credit Corporation

Loan and purchase programs:
- Farm Storage Facility Loan Program; comments due by 6-12-00; published 5-11-00

AGRICULTURE DEPARTMENT

Food Safety and Inspection Service

Meat and poultry inspection:
- Other consumer protection activities; comments due by 6-15-00; published 3-17-00

AGRICULTURE DEPARTMENT

Rural Utilities Service

Electric loans:
- Insured and guaranteed loans; general and pre-loan policies and procedures; comments due by 6-16-00; published 5-17-00

COMMERCE DEPARTMENT

International Trade Administration

Educational and scientific institutions; instruments and apparatus:
- Florence Agreement Program; procedures changes; comments due by 6-12-00; published 5-12-00

COMMERCE DEPARTMENT

National Oceanic and Atmospheric Administration

Endangered and threatened species:
- Sea turtle conservation; Atlantic waters off eastern North Carolina and Virginia; closure to large-mesh gillnet fishing; comments due by 6-12-00; published 5-18-00

Fishery conservation and management:
- Alaska; fisheries of Exclusive Economic Zone—
  - Pacific cod; comments due by 6-12-00; published 4-11-00

Ocean and coastal resource management:
- Coastal Zone Management Act Federal consistency regulations; comments due by 6-15-00; published 6-1-00

COMMERCE DEPARTMENT

Patent and Trademark Office

Patent cases:
- American Inventors Protection Act; implementation—
  - Inter Partes reexamination proceedings, optional; comments due by 6-12-00; published 4-6-00

COMMODITY FUTURES TRADING COMMISSION

Commodity Exchange Act:
- Large commodity pool operators; public reporting requirements; comments due by 6-16-00; published 4-17-00

DEFENSE DEPARTMENT

Defense Logistics Agency

Acquisition regulations:
- Alternative dispute resolution; comments due by 6-15-00; published 5-16-00

DEFENSE DEPARTMENT

Acquisition regulations:
- Foreign military sales contract line items; closeout; comments due by 6-12-00; published 4-13-00

ENVIRONMENTAL PROTECTION AGENCY

Air quality implementation plans; approval and promulgation; various States:
- Alabama; comments due by 6-12-00; published 5-11-00
- Arizona; comments due by 6-12-00; published 4-13-00
- California; comments due by 6-15-00; published 5-16-00
- Illinois and Missouri; comments due by 6-16-00; published 4-17-00

Hazardous waste:
Project XL program; site-specific projects—
International Paper Androscoggin Mill pulp and paper manufacturing facility, ME; comments due by 6-15-00; published 5-16-00

FARM CREDIT ADMINISTRATION
Farm credit system:
Federal Agricultural Mortgage Corporation; risk-based capital requirements; comments due by 6-12-00; published 2-24-00

FEDERAL COMMUNICATIONS COMMISSION
Digital television stations; table of assignments:
Virginia; comments due by 6-12-00; published 4-27-00
Frequency allocations and radio treaty matters:
Software defined radios; inquiry; comments due by 6-14-00; published 3-31-00
Radio stations; table of assignments:
Michigan; comments due by 6-16-00; published 5-12-00
Television broadcasting:
Children's television programming; filing requirements extended; comments due by 6-12-00; published 5-4-00

FEDERAL HOUSING FINANCE BOARD
Federal home loan bank system:
Acquired member assets, core mission activities, investments and advances; comments due by 6-15-00; published 5-26-00

FEDERAL MARITIME COMMISSION
Carrier automated tariffs and tariff systems:
Public access charges; comments due by 6-15-00; published 5-16-00

GENERAL SERVICES ADMINISTRATION
Federal Management Regulation:
Surplus personal property donation; comments due by 6-12-00; published 4-13-00

HEALTH AND HUMAN SERVICES DEPARTMENT
Health Care Financing Administration
Medicare:
Coverage decisions; criteria; comments due by 6-15-00; published 5-16-00

INTERIOR DEPARTMENT
Fish and Wildlife Service
Endangered and threatened species:
Critical habitat designations—
Alameda whipsnake; comments due by 6-12-00; published 5-15-00
Holmgren milk-vetch and Shivwits milk-vetch; comments due by 6-12-00; published 4-12-00

INTERNATIONAL DEVELOPMENT COOPERATION AGENCY
Overseas Private Investment Corporation
Freedom of Information Act; implementation; comments due by 6-12-00; published 5-11-00

PERSONNEL MANAGEMENT OFFICE
Pay administration:
Dual compensation reductions for military retirees; repeal; comments due by 6-12-00; published 4-12-00

POSTAL SERVICE
Domestic Mail Manual:
Sack preparation changes for periodicals nonletter-size pieces and periodicals prepared on pallets; comments due by 6-15-00; published 5-16-00

SECURITIES AND EXCHANGE COMMISSION
Investment advisers:
Electronic filing system and Form ADV update; comments due by 6-13-00; published 4-17-00

TRANSPORTATION DEPARTMENT
Coast Guard
Ports and waterways safety:
New York Harbor, Western Long Island Sound, East and Hudson Rivers, NY; safety zones; comments due by 6-12-00; published 5-11-00
Virginia Beach, VA; safety zone; comments due by 6-15-00; published 5-19-00

TRANSPORTATION DEPARTMENT
Federal Aviation Administration
Airworthiness directives:
Agusta; comments due by 6-13-00; published 4-14-00
Airbus; comments due by 6-15-00; published 5-16-00
Bell; comments due by 6-16-00; published 5-17-00
Boeing; comments due by 6-12-00; published 4-28-00
Eurocopter France; comments due by 6-13-00; published 4-14-00
Fokker; comments due by 6-12-00; published 5-12-00
Gulfstream; comments due by 6-13-00; published 4-14-00
McDonnell Douglas; comments due by 6-12-00; published 4-28-00
Airworthiness standards:
Special conditions—
Boeing Model 747-200 series airplanes; comments due by 6-16-00; published 5-2-00
Morrow Aircraft Corp. Model MB-300 airplane; comments due by 6-14-00; published 5-15-00
Class D and Class E airspace; comments due by 6-16-00; published 5-2-00
Class D and Class E airspace; correction; comments due by 6-16-00; published 5-12-00
Class E airspace; comments due by 6-15-00; published 5-5-00
Federal airways; comments due by 6-16-00; published 4-24-00

TREASURY DEPARTMENT
Customs Service
Educational and scientific institutions; instruments and apparatus:
Florence Agreement Program; procedures changes; comments due by 6-12-00; published 5-12-00

LIST OF PUBLIC LAWS

This is a continuing list of public bills from the current session of Congress which have become Federal laws. It may be used in conjunction with ''P L U S'' (Public Laws Update Service) on 202–523–6641. This list is also available online at http://www.nara.gov/fedreg.

The text of laws is not published in the **Federal Register** but may be ordered in ''slip law'' (individual pamphlet) form from the Superintendent of Documents, U.S. Government Printing Office, Washington, DC 20402 (phone, 202–512–1808). The text will also be made available on the Internet from GPO Access at http://www.access.gpo.gov/nara/index.html. Some laws may not yet be available.

S.J. Res. 44/P.L. 106–205
Supporting the Day of Honor 2000 to honor and recognize the service of minority veterans in the United States Armed Forces during World War II. (May 26, 2000; 114 Stat. 312)

H.R. 154/P.L. 106–206
To allow the Secretary of the Interior and the Secretary of Agriculture to establish a fee system for commercial filming activities on Federal land, and for other purposes. (May 26, 2000; 114 Stat. 314)

H.R. 371/P.L. 106–207
Hmong Veterans' Naturalization Act of 2000 (May 26, 2000; 114 Stat. 316)

H.R. 834/P.L. 106–208
National Historic Preservation Act Amendments of 2000 (May 26, 2000; 114 Stat. 318)

H.R. 1377/P.L. 106–209
To designate the facility of the United States Postal Service located at 9308 South Chicago Avenue, Chicago, Illinois, as the ''John J. Buchanan Post Office Building''. (May 26, 2000; 114 Stat. 320)

H.R. 1832/P.L. 106–210
Muhammad Ali Boxing Reform Act (May 26, 2000; 114 Stat. 321)

H.R. 3629/P.L. 106–211
To amend the Higher Education Act of 1965 to improve the program for American Indian Tribal Colleges and Universities under part A of title III. (May 26, 2000; 114 Stat. 330)

H.R. 3707/P.L. 106–212
American Institute in Taiwan Facilities Enhancement Act (May 26, 2000; 114 Stat. 332)

S. 1836/P.L. 106–213
To extend the deadline for commencement of construction of a hydroelectric project in the State of Alabama. (May 26, 2000; 114 Stat. 334)

Last List May 25, 2000

Public Laws Electronic Notification Service (PENS)

PENS is a free electronic mail notification service of newly

enacted public laws. To subscribe, go to www.gsa.gov/archives/publaws-l.html or send E-mail to **listserv@www.gsa.gov** with the following text message:

SUBSCRIBE PUBLAWS-L Your Name.

Note: This service is strictly for E-mail notification of new laws. The text of laws is not available through this service. **PENS** cannot respond to specific inquiries sent to this address.