AUTHENTICATED
U.S. GOVERNMENT
INFORMATION
GPO

Federal Register

9–14–00 Thursday
Vol. 65 No. 179 Sept. 14, 2000
Pages 55431–55884

The **FEDERAL REGISTER** is published daily, Monday through Friday, except official holidays, by the Office of the Federal Register, National Archives and Records Administration, Washington, DC 20408, under the Federal Register Act (44 U.S.C. Ch. 15) and the regulations of the Administrative Committee of the Federal Register (1 CFR Ch. I). The Superintendent of Documents, U.S. Government Printing Office, Washington, DC 20402 is the exclusive distributor of the official edition.

The **Federal Register** provides a uniform system for making available to the public regulations and legal notices issued by Federal agencies. These include Presidential proclamations and Executive Orders, Federal agency documents having general applicability and legal effect, documents required to be published by act of Congress, and other Federal agency documents of public interest.

Documents are on file for public inspection in the Office of the Federal Register the day before they are published, unless the issuing agency requests earlier filing. For a list of documents currently on file for public inspection, see http://www.nara.gov/fedreg.

The seal of the National Archives and Records Administration authenticates the Federal Register as the official serial publication established under the Federal Register Act. Under 44 U.S.C. 1507, the contents of the **Federal Register** shall be judicially noticed.

The **Federal Register** is published in paper and on 24x microfiche. It is also available online at no charge as one of the databases on GPO Access, a service of the U.S. Government Printing Office.

The online edition of the **Federal Register** is issued under the authority of the Administrative Committee of the Federal Register as the official legal equivalent of the paper and microfiche editions (44 U.S.C. 4101 and 1 CFR 5.10). It is updated by 6 a.m. each day the **Federal Register** is published and it includes both text and graphics from Volume 59, Number 1 (January 2, 1994) forward.

GPO Access users can choose to retrieve online **Federal Register** documents as TEXT (ASCII text, graphics omitted), PDF (Adobe Portable Document Format, including full text and all graphics), or SUMMARY (abbreviated text) files. Users should carefully check retrieved material to ensure that documents were properly downloaded.

On the World Wide Web, connect to the **Federal Register** at http://www.access.gpo.gov/nara. Those without World Wide Web access can also connect with a local WAIS client, by Telnet to swais.access.gpo.gov, or by dialing (202) 512-1661 with a computer and modem. When using Telnet or modem, type swais, then log in as guest with no password.

For more information about GPO Access, contact the GPO Access User Support Team by E-mail at gpoaccess@gpo.gov; by fax at (202) 512–1262; or call (202) 512–1530 or 1–888–293–6498 (toll free) between 7 a.m. and 5 p.m. Eastern time, Monday–Friday, except Federal holidays.

The annual subscription price for the **Federal Register** paper edition is $638, or $697 for a combined **Federal Register,** Federal Register Index and List of CFR Sections Affected (LSA) subscription; the microfiche edition of the **Federal Register** including the Federal Register Index and LSA is $253. Six month subscriptions are available for one-half the annual rate. The charge for individual copies in paper form is $9.00 for each issue, or $9.00 for each group of pages as actually bound; or $2.00 for each issue in microfiche form. All prices include regular domestic postage and handling. International customers please add 25% for foreign handling. Remit check or money order, made payable to the Superintendent of Documents, or charge to your GPO Deposit Account, VISA, MasterCard or Discover. Mail to: New Orders, Superintendent of Documents, P.O. Box 371954, Pittsburgh, PA 15250–7954.

There are no restrictions on the republication of material appearing in the **Federal Register.**

How To Cite This Publication: Use the volume number and the page number. Example: 65 FR 12345.

SUBSCRIPTIONS AND COPIES

PUBLIC	
Subscriptions:	
Paper or fiche	**202–512–1800**
Assistance with public subscriptions	**512–1806**
General online information	**202–512–1530; 1–888–293–6498**
Single copies/back copies:	
Paper or fiche	**512–1800**
Assistance with public single copies	**512–1803**
FEDERAL AGENCIES	
Subscriptions:	
Paper or fiche	**523–5243**
Assistance with Federal agency subscriptions	**523–5243**

Printed on recycled paper.

Contents

Federal Register

Vol. 65, No. 179

Thursday, September 14, 2000

Agricultural Marketing Service
RULES
Cranberries grown in—
Massachusetts et al., 55436–55439

Agricultural Research Service
NOTICES
Patent licenses; non-exclusive, exclusive, or partially exclusive:
American Lyme Disease Foundation, Inc., 55499
Emory University, 55499
Hydrofarm, Inc., 55499–55500
R.J. Van Drunen & Sons, Inc., 55500

Agriculture Department
See Agricultural Marketing Service
See Agricultural Research Service
See Animal and Plant Health Inspection Service
See Farm Service Agency
See Grain Inspection, Packers and Stockyards Administration
See Natural Resources Conservation Service
See Rural Business-Cooperative Service
See Rural Housing Service
See Rural Utilities Service

Air Force Department
NOTICES
Agency information collection activities:
Proposed collection; comment request, 55512
Patent licenses; non-exclusive, exclusive, or partially exclusive:
Intellisense Corp., 55512

Animal and Plant Health Inspection Service
RULES
Plant-related quarantine, domestic:
Plum pox compensation, 55431–55436

Broadcasting Board of Governors
NOTICES
Senior Executive Service:
Performance Review Board; membership, 55501

Commerce Department
See International Trade Administration
See National Oceanic and Atmospheric Administration

Comptroller of the Currency
NOTICES
Agency information collection activities:
Proposed collection; comment request, 55677–55678

Defense Department
See Air Force Department

Drug Enforcement Administration
NOTICES
Applications, hearings, determinations, etc.:
Morton Grove Pharmaceuticals, Inc., 55644

Energy Department
See Federal Energy Regulatory Commission

Environmental Protection Agency
RULES
Air programs:
State program approvals and delegation of Federal authorities, 55809–55846
PROPOSED RULES
Air pollutants, hazardous; national emission standards:
Aluminum foundry and aluminum die casting operations; source category list, 55489–55491
Secondary aluminum production, 55491–55495
Hazardous waste:
Inorganic chemical manufacturing processes identification and listing, newly identified wastes land disposal restrictions, etc., 55683–55782
NOTICES
Agency information collection activities:
Proposed collection; comment request, 55522–55524
Air pollution control:
Citizens suits; proposed settlements—
American Foundrymen's Society et al., 55524–55525
Meetings:
Children's Health Protection Advisory Committee, 55525
Local Government Advisory Committee, 55525
Superfund; response and remedial actions, proposed settlements, etc.:
Hastings Ground Water Contamination Site, NE, 55526
Pullman/Liquid Dynamics Site, IL, 55526

Executive Office of the President
See Presidential Documents

Farm Service Agency
PROPOSED RULES
Program regulations:
Environmental policies and procedures, 55783–55807

Federal Aviation Administration
RULES
Airworthiness directives:
Eurocopter Canada, 55452–55453
Eurocopter France, 55457–55458
Israel Aircraft Industries, Ltd., 55450–55452
MD Helicopters, Inc., 55449–55450
Sikorsky, 55453–55457
Airworthiness standards:
Aircraft turbine engines; bird ingestion, 55847–55856
Special conditions—
Boeing Model 737-700 IGW airplane, 55443–55448
Standard instrument approach procedures, 55458–55460
PROPOSED RULES
Airworthiness directives:
Fairchild; withdrawn, 55470–55471
Rolls-Royce plc, 55468–55470
S.N. CENTRAIR, 55466–55468
NOTICES
Airport noise compatibility program:
Corpus Christi International Airport, TX, 55674
Passenger facility charges; applications, etc.:
Central Illinois Regional Airport, IL, 55675

Federal Bureau of Investigation
NOTICES
Meetings:
National Domestic Preparedness Office; State and Local Advisory Group, 55644

Federal Emergency Management Agency
NOTICES
Flood insurance program:
Flood map changes, 55526–55632

Federal Energy Regulatory Commission
NOTICES
Electric rate and corporate regulation filings:
MidAmerican Energy Co. et al., 55516–55518
Sierra Pacific Power Co. et al., 55518–55519
Southwestern Power Administration et al., 55519–55521
Environmental statements; notice of intent:
Skykomish River Hydro Inc., 55521–55522
Practice and procedure:
Off-the-record communications, 55522
Applications, hearings, determinations, etc.:
Alliance Pipeline L.P., 55512–55513
Eastern Shore Natural Gas Co., 55513
Michigan Gas Storage Co., 55513–55514
Southern Natural Gas Co., 55514–55515
Texas Eastern Transmission Corp., 55515
Texas-Ohio Pipeline, Inc., 55515–55516

Federal Reserve System
NOTICES
Banks and bank holding companies:
Formations, acquisitions, and mergers, 55632
Permissible nonbanking activities, 55632

Food and Drug Administration
RULES
Animal drugs, feeds, and related products:
Sponsor name and address changes—
Veterinary Research Associates, Inc., 55460–55461
NOTICES
Agency information collection activities:
Proposed collection; comment request, 55633–55634
Submission for OMB review; comment request, 55634–55635

General Accounting Office
NOTICES
Meetings:
Federal Accounting Standards Advisory Board, 55632

General Services Administration
NOTICES
Environmental statements; availability, etc.:
Lane County, OR; Federal courthouse and office building, 55633

Grain Inspection, Packers and Stockyards Administration
NOTICES
Committees; establishment, renewal, termination, etc.:
Grain Inspection Advisory Committee, 55500

Health and Human Services Department
See Food and Drug Administration
See Health Care Financing Administration
See National Institutes of Health

Health Care Financing Administration
NOTICES
Agency information collection activities:
Submission for OMB review; comment request, 55635

Indian Affairs Bureau
PROPOSED RULES
Economic enterprises:
Gaming on trust lands acquired after October 17, 1988; determination procedures, 55471–55476

Interior Department
See Indian Affairs Bureau
See Land Management Bureau
See Minerals Management Service
NOTICES
Senior Executive Service:
Performance Review Board; membership, 55641

International Trade Administration
NOTICES
Antidumping:
Brass sheet and strip from—
Netherlands, 55501–55502
Pure magnesium from—
Canada, 55502–55504
Stainless steel angle from—
Various countries, 55504–55508
Sulfanilic acid from—
China, 55508–55511
Applications, hearings, determinations, etc.:
University of—
Texas at San Antonio, 55511–55512

Judicial Review Commission on Foreign Asset Control
NOTICES
Foreign Narcotics Kingpin Designation Act:
Foreign persons' assets blocked by U.S. government, review of laws and judicial precedents; U.S. persons affected by such blocking, remedies evaluation
Hearings and comment request, 55643–55644

Justice Department
See Drug Enforcement Administration
See Federal Bureau of Investigation

Labor Department
See Pension and Welfare Benefits Administration

Land Management Bureau
PROPOSED RULES
Minerals management:
Mineral materials disposal; sales; free use, 55863–55880
NOTICES
Meetings:
Resource Advisory Councils—
Northeastern Great Basin, 55641–55642
Oil and gas leases:
Wyoming, 55642
Realty actions; sales, leases, etc.:
California, 55642

Minerals Management Service
PROPOSED RULES
Outer Continental Shelf oil and gas leasing:
Royalty suspensions, 55476–55489

NOTICES
Royalty management:
Indian gas production in designated areas not associated with index zones; additional royalty payments; major portion prices and due dates, 55642–55643

National Credit Union Administration
RULES
Credit unions:
Involuntary liquidation; adjudication of creditor claims, 55439–55443
Prompt corrective action—
Technical corrections, 55439
PROPOSED RULES
Credit unions:
State-chartered credit unions branching outside U.S.; insurance requirements, 55464–55466

National Institutes of Health
NOTICES
Grants and cooperative agreements; availability, etc.:
ATP-driven, molecular-based rotation engine development, 55635–55636
High speed parallel nucleic acid sequencing method development, 55637–55638
Prototype molecular-based computing devices development, 55638–55639
Meetings:
Minority Health Research Advisory Committee, 55639
National Institute of Dental and Craniofacial Research, 55639–55640
National Institute on Aging, 55640–55641
National Institute on Alcohol Abuse and Alcoholism, 55639
National Library of Medicine, 55641

National Oceanic and Atmospheric Administration
PROPOSED RULES
Fishery conservation and management:
West Coast States and Western Pacific fisheries—
Pacific Coast groundfish, 55495–55498

National Science Foundation
NOTICES
Antarctic Conservation Act of 1978; permit applications, etc., 55644–55645

Natural Resources Conservation Service
NOTICES
Field office technical guides; changes:
South Dakota, 55500–55501

Nuclear Regulatory Commission
NOTICES
Applications, hearings, determinations, etc.:
AmerGen Energy Co., LLC, 55645
AmerGen Vermont, LLC, 55645
Commonwealth Edison Co., 55645–55646
PECO Energy Co., 55646–55650
Power Authority of State of New York, 55650–55652

Pension and Welfare Benefits Administration
NOTICES
Employee Retirement Income Security Act:
Disclosure obligations of fiduciaries of employee benefit plans governed by ERISA; information request, 55857–55861

Personnel Management Office
RULES
Prevailing rate systems, 55431

Postal Service
RULES
International Mail Manual:
Global Direct—Canada Publications Mail, 55462–55463

Presidential Documents
ADMINISTRATIVE ORDERS
Trading With the Enemy Act; continuation of exercise of authorities (Presidential Determination No. 2000-29 of September 12, 2000), 55883

Public Health Service
See Food and Drug Administration
See National Institutes of Health

Rural Business-Cooperative Service
PROPOSED RULES
Program regulations:
Environmental policies and procedures, 55783–55807

Rural Housing Service
PROPOSED RULES
Program regulations:
Environmental policies and procedures, 55783–55807

Rural Utilities Service
PROPOSED RULES
Program regulations:
Environmental policies and procedures, 55783–55807
NOTICES
Reports and guidance documents; availability, etc.:
Electric program; title evidence requirements for real property; bulletin rescinded, 55501

Securities and Exchange Commission
NOTICES
Agency information collection activities:
Submission for OMB review; comment request, 55652–55653
Self-regulatory organizations; proposed rule changes:
American Stock Exchange LLC, 55653–55656
Boston Stock Exchange, Inc., 55656–55658
Chicago Board Options Exchange, Inc., 55658–55659
Chicago Stock Exchange, Inc., 55659–55661
National Association of Securities Dealers, Inc., 55661–55662
Philadelphia Stock Exchange, Inc., 55663–55666

State Department
NOTICES
Agency information collection activities:
Submission for OMB review; comment request, 55666–55667
Committees; establishment, renewal, termination, etc.:
North Pacific Anadromous Fish Commission, U.S. Section Advisory Panel, 55667
Grants and cooperative agreements; availability, etc.:
Georgian School of Journalism Project, 55667–55670
Meetings:
Fine Arts Committee, 55670
Privacy Act:
Systems of records, 55670–55673
Senior Executive Service:
Performance Review Board; membership, 55673

Shrimp trawl fishing; sea turtle protection guidelines; certification, 55673–55674

Surface Transportation Board
NOTICES
Railroad operation, acquisition, construction, etc.:
Norfolk Southern Railway Co., 55675
Sandusky River Railroad Co., Inc., 55675
Railroad services abandonment:
Kyle Railroad Co. et al., 55676

Transportation Department
See Federal Aviation Administration
See Surface Transportation Board

Treasury Department
See Comptroller of the Currency
NOTICES
Agency information collection activities:
Submission for OMB review; comment request, 55676–55677

Veterans Affairs Department
RULES
Board of Veterans Appeals:
Veterans law judges; new title for Board members, 55461–55462
NOTICES
Agency information collection activities:
Proposed collection; comment request, 55678–55681
Committees; establishment, renewal, termination, etc.:
Geriatrics and Gerontology Advisory Committee, 55681
Privacy Act:
Systems of records, 55681–55682

Separate Parts In This Issue

Part II
Environmental Protection Agency, 55683–55782

Part III
Department of Agriculture, Farm Service Agency, Rural Business Cooperative Service, Rural Housing Service, Rural Utilities Service, 55783–55807

Part IV
Environmental Protection Agency, 55809–55846

Part V
Department of Transportation, Federal Aviation Administration, 55847–55856

Part VI
Department of Labor, Pension and Welfare Benefits Administration, 55857–55861

Part VII
Departtment of Interior, Land Management Bureau, 55863–55880

Part VIII
The President, 55881–55883

Reader Aids
Consult the Reader Aids section at the end of this issue for phone numbers, online resources, finding aids, reminders, and notice of recently enacted public laws.

CFR PARTS AFFECTED IN THIS ISSUE

A cumulative list of the parts affected this month can be found in the Reader Aids section at the end of this issue.

3 CFR

Administrative Orders:

Presidential Determinations:

No. 00–29 of September 12, 2000 55883

5 CFR

532.....55431

7 CFR

301.....55431

929.....55436

Proposed Rules:

1940.....55784

12 CFR

702.....55439

709.....55439

Proposed Rules:

741.....55464

14 CFR

23.....55848

25 (2 documents) 55443, 55848

33.....55848

39 (5 documents) 55449, 55450, 55452, 55453, 55457

97.....55458

Proposed Rules:

39 (3 documents) 55466, 55468, 55470

21 CFR

510.....55460

25 CFR

Proposed Rules:

292.....55471

30 CFR

Proposed Rules:

218.....55476

256.....55476

260.....55476

38 CFR

19.....55461

39 CFR

20.....55462

40 CFR

9.....55810

63.....55810

Proposed Rules:

63 (2 documents) 55489, 55491

148.....55684

261.....55684

268.....55684

271.....55684

302.....55684

43 CFR

Proposed Rules:

3600.....55864

3610.....55864

3620.....55864

50 CFR

Proposed Rules:

660.....55495

Rules and Regulations

Federal Register

Vol. 65, No. 179

Thursday, September 14, 2000

This section of the FEDERAL REGISTER contains regulatory documents having general applicability and legal effect, most of which are keyed to and codified in the Code of Federal Regulations, which is published under 50 titles pursuant to 44 U.S.C. 1510.

The Code of Federal Regulations is sold by the Superintendent of Documents. Prices of new books are listed in the first FEDERAL REGISTER issue of each week.

OFFICE OF PERSONNEL MANAGEMENT

5 CFR Part 532

RIN 3206–AJ24

Prevailing Rate Systems; Abolishment of the St. Louis, MO, Special Wage Schedule for Printing Positions

AGENCY: Office of Personnel Management.

ACTION: Interim rule with request for comments.

SUMMARY: The Office of Personnel Management is issuing an interim rule to abolish the St. Louis, MO, Federal Wage System (FWS) special wage schedule for printing positions. Printing and lithographic employees in the St. Louis wage area will now be paid from the regular St. Louis appropriated fund FWS wage area schedule. This change is necessary because there are no longer enough printing and lithographic employees in the wage area to conduct the local special wage survey successfully.

DATES: *Effective Date:* This regulation is effective on October 16, 2000.

Applicability Date: Agencies will place employees who are paid from the St. Louis special wage schedule on the St. Louis regular wage schedule on December 17, 2000.

ADDRESSES: Send or deliver comments to Donald J. Winstead, Assistant Director for Compensation Administration, Workforce Compensation and Performance Service, Office of Personnel Management, Room 7H31, 1900 E Street NW., Washington, DC 20415–8200, or FAX: (202) 606–4264.

FOR FURTHER INFORMATION CONTACT: Chenty I. Carpenter at (202) 606–8359; by FAX at (202) 606–4264; or by email at *cicorrea@opm.gov.*

SUPPLEMENTARY INFORMATION: The Office of Personnel Management (OPM) is abolishing the St. Louis, MO, Federal Wage System (FWS) special wage schedule for printing positions. The Department of Defense (DOD) recommended that we abolish this special wage schedule because it has become extremely difficult for DOD to release adequate numbers of employees to conduct the local special wage survey successfully.

The number of printing and lithographic employees in the wage area has declined from 225 employees in 1985 to 17 employees currently. These employees work in various locations throughout the St. Louis wage area. Twelve of these employees work for the Defense Logistics Agency, four work for the Department of the Army, and one works for the National Guard Bureau. DOD has found it increasingly difficult to comply with the requirement that employees paid from the special printing schedule participate in the local special wage survey process. The decline in employees is expected to continue until there are no longer any printing and lithographic employees in the wage area.

Printing and lithographic employees will convert to the St. Louis FWS regular wage schedule on a grade for grade basis. Each employee's new rate of pay will be set at the step rate for the applicable grade of the regular wage schedule that equals the employee's existing rate of pay. If an employee's existing pay rate falls between two steps on the regular schedule, the new rate will be set at the higher of the two steps. If an employee's existing pay rate is higher than the highest rate for his or her grade on the regular schedule, the employee will, if otherwise eligible, be entitled to pay retention.

The Federal Prevailing Rate Advisory Committee, the national labor-management committee that advises OPM on FWS pay matters, reviewed and concurred by consensus with this change.

Regulatory Flexibility Act

I certify that this regulation will not have a significant economic impact on a substantial number of small entities because it will affect only Federal agencies and employees.

List of Subjects in 5 CFR Part 532

Administrative practice and procedure, Freedom of information, Government employees, Reporting and recordkeeping requirements, Wages.

U.S. Office of Personnel Management.

Janice R. Lachance,

Director.

Accordingly, the Office of Personnel Management amends 5 CFR part 532 as follows:

PART 532—PREVAILING RATE SYSTEMS

1. The authority citation for part 532 continues to read as follows:

Authority: 5 U.S.C. 5343, 5346; § 532.707 also issued under 5 U.S.C. 552.

2. In § 532.279, paragraph (j) is revised to read as follows:

§ 532.279 Special Wage schedules for printing positions.

* * * * *

(j) A special printing schedule is authorized in the Washington, DC, wage area.

[FR Doc. 00–23589 Filed 9–13–00; 8:45 am]

BILLING CODE 6325–01–P

DEPARTMENT OF AGRICULTURE

Animal and Plant Health Inspection Service

7 CFR Part 301

[Docket No. 00–035–1]

RIN 0579–AB19

Plum Pox Compensation

AGENCY: Animal and Plant Health Inspection Service, USDA.

ACTION: Interim rule and request for comments.

SUMMARY: We are amending our plum pox regulations to provide for the payment of compensation to the owners of commercial stone fruit orchards and fruit tree nurseries who had stone fruit trees or nursery stock destroyed in order to control plum pox. The payment of these funds is necessary in order to reduce the economic impact of the plum pox quarantine on affected commercial stone fruit growers and fruit tree nursery owners and enhance eradication efforts.

DATES: This interim rule is effective September 14, 2000. We invite you to comment on this docket. We will consider all comments that we receive by November 13, 2000.

ADDRESSES: Please send your comment and three copies to: Docket No. 00–035–1, Regulatory Analysis and Development, PPD, APHIS, Suite 3C03, 4700 River Road Unit 118, Riverdale, MD 20737–1238.

Please state that your comment refers to Docket No. 00–035–1.

You may read any comments that we receive on this docket in our reading room. The reading room is located in room 1141 of the USDA South Building, 14th Street and Independence Avenue, SW., Washington, DC. Normal reading room hours are 8 a.m. to 4:30 p.m., Monday through Friday, except holidays. To be sure someone is there to help you, please call (202) 690–2817 before coming.

APHIS documents published in the **Federal Register**, and related information, including the names of organizations and individuals who have commented on APHIS dockets, are available on the Internet at http://www.aphis.usda.gov/ppd/rad/webrepor.html.

FOR FURTHER INFORMATION CONTACT: Mr. Stephen Poe, Operations Officer, Program Support Staff, PPQ, APHIS, 4700 River Road Unit 134, Riverdale, MD 20737–1236; (301) 734–8247.

SUPPLEMENTARY INFORMATION:

Background

On June 2, 2000, we published in the **Federal Register** (65 FR 35261–35265, Docket No. 00–034–1) an interim rule that established regulations quarantining a portion of Adams County, PA, due to the detection of plum pox in that region and restricting the interstate movement of certain articles from the quarantined area that present a risk of transmitting plum pox (*e.g.,* trees, seedlings, root stock, budwood, branches, twigs, and leaves of susceptible *Prunus* spp.). Those regulations, which are contained in ''Subpart Plum Pox'' (7 CFR 301.74 through 301.74–4), were promulgated on an emergency basis to prevent the spread of plum pox to noninfested areas of the United States.

Plum pox is an extremely serious viral disease of plants that can affect many *Prunus* (stone fruit) species, including plum, peach, apricot, almond, nectarine, and sweet and tart cherry (although the particular strain of plum pox detected in Adams County, PA the D strain is not known to infect cherry). A number of wild and ornamental *Prunus* species may also be susceptible to this disease. Infection eventually results in severely reduced fruit production, and the fruit that is produced is often misshapen and blemished. In Europe, plum pox has been present for a number of years and is considered to be the most serious disease affecting susceptible *Prunus* varieties. Plum pox virus is transmitted locally by a variety of aphid species, as well as by budding and grafting with infected plant material, and spreads over longer distances through movement of infected budwood, nursery stock, and other plant parts. The D strain of plum pox is not known to be transmitted by seed or fruit.

There are no known effective methods for treating trees or other plant material infected with plum pox, nor are there any known effective prophylactic treatments to prevent the disease from occurring in trees exposed to the disease due to their proximity to infected trees or other plant material. Without effective treatments, the only option for preventing the spread of the disease is the destruction of infected and exposed trees and other plant material.

In addition to quarantining portions of Adams County, PA, officials of the Animal and Plant Health Inspection Service (APHIS) and the Pennsylvania Department of Agriculture (PDA) have been conducting an intensive survey and eradication program in and around the infested area since plum pox was first detected in the fall of 1999. In the fall of 1999, 18 blocks of commercial stone fruit trees covering 218 acres were found positive for plum pox. The trees in those blocks were destroyed in the spring of 2000. As of July 21, 2000, PDA and APHIS had jointly ordered the destruction of an additional 24 blocks of commercial stone fruit trees covering 527 acres that had been identified as infected during this year's survey, which began in the first week of May 2000. PDA and APHIS anticipate that additional infected blocks will be detected and destroyed during the course of this year's survey. In addition to the commercial stone fruit orchards affected by plum pox, two fruit tree nurseries located in the vicinity of the regulated area were issued emergency action notifications (EAN's) that stopped the sale and movement of any *Prunus* spp. plant material from those nurseries because of risk associated with budwood that was cut in the quarantined area.

On March 2, 2000, the Secretary of Agriculture published in the **Federal Register** (65 FR 11280–11281, Docket No. 00–001–1) a declaration of extraordinary emergency regarding plum pox that was effective on January 20, 2000. A declaration of extraordinary emergency enables the Secretary to, among other things, pay compensation to producers and other persons for economic losses incurred by them as a result of the quarantine, destruction, or other action taken pursuant to the declaration of extraordinary emergency. Therefore, in order to reduce the economic impact of the plum pox quarantine on affected commercial stone fruit growers and fruit tree nursery owners, we are amending the plum pox regulations to provide for the payment of compensation to eligible growers and nursery owners. The provisions for the payment of compensation have been added to the plum pox regulations in a new section, § 301.74–5, ''Compensation.''

Eligibility

Paragraph (a) of § 301.74–5 provides that owners of commercial stone fruit orchards and fruit tree nurseries will be eligible to receive compensation from the U.S. Department of Agriculture (USDA) to mitigate losses or expenses incurred as a result of the plum pox quarantine and emergency actions.

The owner of a commercial stone fruit orchard will be eligible to receive compensation for losses associated with the destruction of trees in order to control plum pox pursuant to an EAN issued by APHIS. When the presence of plum pox is confirmed in an orchard block, APHIS and PDA jointly issue an order for the destruction of those trees that have been identified as being infected with plum pox or exposed to the plum pox virus. That order, which identifies the trees to be destroyed and specifies the date by which the destruction must occur, will serve as the primary means of documentation for an owner's claim for compensation.

The owner of a fruit tree nursery will be eligible to receive compensation for net revenue losses associated with the prohibition on the movement or sale of nursery stock as a result of the issuance of an EAN by APHIS with respect to regulated articles within the nursery in order to control plum pox. To date, two fruit tree nurseries have been issued EAN's that prohibited the sale and movement of any *Prunus* material in the nursery because of risk associated with budwood that was cut in the quarantined area. Because nursery stock can be considered a perishable crop, we believe that it is reasonable that the nursery owners would choose to destroy the regulated articles rather than continuing to spend money maintaining articles that could not be moved or sold. Again, the EAN identifying the material that cannot be moved or sold will serve

as the primary means of documentation for a nursery owner's claim for compensation.

Amount of Payment

Paragraph (b) of § 301.74–5 provides the rates of compensation for trees and the method of calculating the amount of compensation for nursery stock. This paragraph begins by stating that compensation will be paid to eligible individuals upon approval of a claim submitted in accordance with § 301.74–5(c), which is explained below.

Stone fruit orchards. Eligible owners of commercial stone fruit orchards will be compensated on a per-acre basis at a rate based on the age of the trees destroyed and a 3-year prohibition on the planting of host trees. The compensation to be paid by USDA is based on the loss in value of the destroyed orchard. The calculation is the difference between the value of the original (destroyed) trees over a 25-year life cycle minus the value of the trees to be replanted, up to the expected remaining life of the replanted trees. This takes into account the fact that a replanted orchard is an economically productive asset for its entire expected life.

The loss in value is calculated as the difference between the net present value (NPV) of the original (destroyed) orchard over a 25-year life cycle minus the NPV of the replanted orchard for its entire productive life of 25 years. To calculate the NPV of an orchard (both original and replanted orchards), we used discounted cash flow analysis, which takes into account the quantity, variability, and duration of the forecasted income stream over a specified income projection period. Each year's net income is discounted back to a present worth figure at the appropriate, market-derived discount rate. The valuation model can be expressed in the following equation form, where Y = net income, r = discount rate, and n = number of years in the discount period:

$$NPV = \frac{Y_1}{(1+r)^1} + \frac{Y_2}{(1+r)^2} + \frac{Y_3}{(1+r)^3} + \ldots + \frac{Y_n}{(1+r)^n}$$

To calculate NPV using the above equation, we had to determine net income, discount rate, and the number of years in the discount period. Each of these inputs is discussed below. A more detailed analysis may be obtained from the person listed under **FOR FURTHER INFORMATION CONTACT.**

The rate of compensation to be paid by USDA is set at up to 85 percent of the difference in value between the destroyed and replacement orchards as described above. The State of Pennsylvania has indicated that State funds will be used to make up the remaining difference in value. In no case will total USDA plus State compensation exceed 100 percent of the difference in value.

Net income. To determine per-acre net income, we multiplied the yield (number of bushels) per acre by the price per bushel, then subtracted production costs. The estimation of net income is based on the 1995–1998 average Pennsylvania peach production, price, and yield data from the Pennsylvania Agricultural Statistics Service.

Year	Peach price ($/bushel)	Yield (bushel/acre)	Income ($ per acre)
1995	13.65	275.9	3,766
1996	16.50	254.5	4,199
1997	16.85	254.5	4,288
1998	15.85	236.4	3,747
1995–98 average	15.71	255.3	4,010

The calculation of the variable costs of production is based on the following estimates:

Type of cost	Year incurred	Costs
Land preparation	Year 0	$395 per acre
Planting	Year 1	$1,303 per acre
Orchard maintenance during preproductive year	Year 2	$222 per acre
Orchard maintenance during productive years	Years 3–25	$899/year per acre
Harvest cost	Years 4–25	$1.75 per bushel

Discount rate. The discount rate used in the present value calculation is 12.5 percent, which is the risk-adjusted rate estimated to be appropriate in this situation.

Number of years in discount period. The NPV was calculated using a life cycle approach. The revenues and costs were calculated over a period equal to the expected productive life of a replanted orchard, which, as noted previously, is 25 years.

Using the information and methodology set forth in the preceding paragraphs, we have arrived at the per-acre compensation rates set forth in the chart provided in § 301.74–5(b)(1) in the regulatory text at the end of this document. The amounts of compensation for destroyed trees range from $3,713 per acre for a 25-year-old block of trees to $15,000 per acre for a 7-year-old block of trees. Finally, because compensation programs such as that established by this rule are intended, in part, to encourage the prompt execution of measures deemed necessary to control or eradicate plant pests, § 301.74–5(b)(1) provides that compensation payments will be reduced by 10 percent, plus any tree removal costs incurred by the State or USDA, if the trees subject to an EAN were not destroyed by the date specified on that order.

Fruit tree nurseries. Eligible owners of fruit tree nurseries will be compensated for up to 85 percent of net revenues that were lost as the result of the issuance of an EAN (compensation will be 85 percent if State compensation is less than or equal to 15 percent of lost

revenues). The issuance of an order prohibiting the movement or sale of regulated articles from a nursery would affect two season's worth of nursery stock, *i.e.,* the nursery stock that would have been sold during the year in which the EAN was issued (referred to as the first year crop) and the nursery stock being grown during that year that would have been sold during the following year (referred to as the second year crop).

To calculate the net revenue lost on the first year crop, we will multiply the expected number of trees that would have been sold (the number of trees in the field minus 2 percent culls and 3 percent unsold trees) by the average price per tree ($4.65 per tree for all varieties); from that amount, we will then subtract digging, grading, and storage costs ($0.10 per tree) to arrive at the net revenue lost for the first year crop. To calculate the net revenue lost for the second year crop, we will multiply the expected number of trees to be sold (the number of budded trees in the field minus 20 percent death loss minus 2 percent culls) by the average price per tree ($4.65 for plum and apricot trees and $3.30 for peach and nectarine trees). The total compensation amount will, as noted above, be up to 85 percent of the sum of the net revenue losses for the first and second year crops.

How to Apply

Paragraph (c) of § 301.74–5 provides information on how to apply for compensation. This paragraph states that the form necessary to apply for compensation may be obtained from the Plum Pox Cooperative Eradication Program, USDA, APHIS, PPQ, 401 East Louther Street, Suite 102, Carlisle, PA 17013–2625, and that the completed claim form must be sent to the same address. Claims for trees or nursery stock destroyed on or before the effective date of this rule must be received within 60 days after the effective date of this rule. Claims for trees or nursery stock destroyed after the effective date of this rule must be received within 60 days after the destruction of the trees or nursery stock.

For claims made by owners of commercial stone fruit orchards, the completed application must be accompanied by a copy of the EAN ordering the destruction of the trees, its accompanying inventory that describes the acreage and ages of trees removed, and documentation verifying that the destruction of trees has been completed and the date of that destruction. For claims made by owners of fruit tree nurseries, the completed application must be accompanied by a copy of the EAN prohibiting the sale or movement of the nursery stock, its accompanying inventory that describes the total number of trees covered by the EAN and their age and variety, and documentation indicating the final disposition of the nursery stock.

Replanting

Paragraph (d) of § 301.74–5 prohibits, for a period of 3 years following the destruction of the original trees, the replanting of susceptible *Prunus* species on premises where trees have been destroyed because of plum pox pursuant to an EAN. We are taking this step to ensure that there is adequate time to thoroughly survey the areas within and around quarantined areas and ensure they are free of infection before potential host material is reintroduced.

Immediate Action

The Administrator of the Animal and Plant Health Inspection Service has determined that there is good cause for publishing this interim rule without prior opportunity for public comment. Immediate action is necessary to reduce the economic effect of the plum pox quarantine on affected commercial stone fruit growers and fruit tree nursery owners, thus ensuring the continued cooperation of growers and nursery owners with the survey and eradication activities being conducted by PDA and APHIS.

Because prior notice and other public procedures with respect to this action are impracticable and contrary to the public interest under these conditions, we find good cause under 5 U.S.C. 553 to make this action effective less than 30 days after publication. We will consider comments that are received within 60 days of publication of this rule in the **Federal Register.** After the comment period closes, we will publish another document in the **Federal Register.** The document will include a discussion of any comments we receive and any amendments we are making to the rule as a result of the comments.

Executive Order 12866 and Regulatory Flexibility Act

This rule has been reviewed under Executive Order 12866.

The rule has been determined to be significant for the purposes of Executive Order 12866 and, therefore, has been reviewed by the Office of Management and Budget.

The following economic analysis provides a cost-benefit analysis as required by Executive Order 12866 and an analysis of the potential economic effects on small entities as required by the Regulatory Flexibility Act.

This rule amends the plum pox regulations to provide for the payment of compensation to the owners of commercial stone fruit orchards and fruit tree nurseries who had stone fruit trees or nursery stock destroyed in order to control plum pox. The payment of these funds is necessary in order to reduce the economic effect of the plum pox quarantine on affected commercial stone fruit growers and fruit tree nursery owners.

The presence of plum pox in Adams County, PA, seriously threatens not only the stone fruit orchards in southern Pennsylvania and adjacent areas of Maryland and West Virginia, but could eventually threaten the entire domestic stone fruit industry. Federal involvement in eradicating a new disease outbreak such as plum pox yields greater benefits to the uninfected industry in the United States. Without such actions, it is unlikely that affected individuals could or would provide sufficient control to prevent the spread of diseases or pests.

Pennsylvania is the fifth largest peach-producing State in the United States, following California, South Carolina, Georgia, and New Jersey. In 1998, Pennsylvania produced 65 million pounds of peaches, with Adams County producing about 45 percent (29.5 million pounds) of that total. Adams County peaches fetch an average price of 34 cents per pound, which is higher than the national average of 24.40 cents per pound. The total value of production for Adams County peaches in 1998 was approximately $10 million, or half of the value of the State's production.

The total value of U.S. peach production was nearly $500 million in 1998. Specific production statistics for other plum pox hosts grown in Pennsylvania, such as apricots, nectarines, and plums, are unavailable. In 1998, the total value of domestic stone fruit production, including almonds, was about $1.6 billion.

Removing infected and exposed stone fruit trees protects a substantial investment in other stone fruit orchards. While the entire value of domestically produced stone fruit is not at risk immediately from plum pox, the disease would, if left unchecked, continue to spread; over time, an increasing percentage of the industry would be at risk.

On June 29, 2000, the Vice President and the Secretary of Agriculture announced that the USDA would provide up to $13.2 million to compensate Pennsylvania fruit growers

for trees destroyed because of plum pox. As noted previously, a total of 745 acres of stone fruit trees had been destroyed or ordered destroyed by July 21, 2000. According to PDA officials, the average age of those trees is 11 years; this rule provides for a payment of up to $13,601 per acre by USDA for 11-year-old-trees. Paid at that rate, the costs of replacing those 745 acres of stone fruit trees will be approximately $10.1 million, leaving about $3.1 million of the $13.2 million available to cover additional losses for this year (*i.e.,* approximately 228 additional acres if paid at the $13,601 per-acre rate). As noted previously, PDA and APHIS anticipate that additional infected blocks are likely to be detected and destroyed during the course of this year's survey, so it is likely that all or substantially all of the $13.2 million in compensation funds that were the subject of the June 29, 2000, announcement will have to be used to cover this year's losses. The costs of compensation for the net revenues lost by the two fruit tree nurseries is expected to be approximately $500,000.

Effects on Small Entities

The Regulatory Flexibility Act requires that the Agency specifically consider the economic effects of its rules on small entities. The Small Business Administration (SBA) defines a firm engaged in agriculture as ''small'' if it has less than $500,000 in annual receipts. Within the quarantined area of Adams County, PA, there are 7 peach, plum, and nectarine producers with orchards on about 800 acres. Four of these producers are known to have orchards infected with plum pox. None of the producers in the quarantined area would be considered small under SBA guidelines. However, in Adams County as a whole, there are 124 stone fruit growers; of these, about two-thirds would be considered small entities under SBA guidelines. This rule will allow eligible persons to be compensated for the destruction of stone fruit trees or nursery stock to control plum pox and is, therefore, expected to be beneficial to growers or nursery owners who had trees or nursery stock destroyed as part of the eradication program.

Under these circumstances, the Administrator of the Animal and Plant Health Inspection Service has determined that this action will not have a significant economic impact on a substantial number of small entities.

Executive Order 12372

This program/activity is listed in the Catalog of Federal Domestic Assistance under No. 10.025 and is subject to Executive Order 12372, which requires intergovernmental consultation with State and local officials. (See 7 CFR part 3015, subpart V.)

Executive Order 12988

This rule has been reviewed under Executive Order 12988, Civil Justice Reform. This rule: (1) Preempts all State and local laws and regulations that are inconsistent with this rule; (2) has no retroactive effect; and (3) does not require administrative proceedings before parties may file suit in court challenging this rule.

Paperwork Reduction Act

In accordance with section 3507(j) of the Paperwork Reduction Act of 1995 (44 U.S.C. 3501 *et seq.*), the information collection and recordkeeping requirements included in this interim rule have been submitted for emergency approval to the Office of Management and Budget (OMB). OMB has assigned control number 0579–0159 to the information collection and recordkeeping requirements.

We plan to request continuation of that approval for 3 years. Please send written comments on the 3-year approval request to the following addresses: (1) Office of Information and Regulatory Affairs, OMB, Attention: Desk Officer for APHIS, Washington, DC 20503, and (2) Docket No. 00–035–1, Regulatory Analysis and Development, PPD, APHIS, suite 3C03, 4700 River Road Unit 118, Riverdale, MD 20737–1238. Please state that your comments refer to Docket No. 00–035–1 and send your comments within 60 days of publication of this rule.

This interim rule will provide for the payment of compensation to the owners of commercial stone fruit orchards and fruit tree nurseries who had stone fruit trees or nursery stock destroyed in order to control plum pox. The payment of these funds is necessary in order to reduce the economic impact of the plum pox quarantine on affected commercial stone fruit growers and fruit tree nursery owners and increase the effectiveness of plum pox eradication efforts. Implementing this compensation program will necessitate the use of an information collection activity in the form a claim form that eligible owners must complete in order to apply for compensation. We are soliciting comments from the public concerning our information collection requirements. These comments will help us:

(1) Evaluate whether the information collection is necessary for the proper performance of our agency's functions, including whether the information will have practical utility;

(2) Evaluate the accuracy of our estimate of the burden of the information collection, including the validity of the methodology and assumptions used;

(3) Enhance the quality, utility, and clarity of the information to be collected; and

(4) Minimize the burden of the information collection on those who are to respond (such as through the use of appropriate automated, electronic, mechanical, or other technological collection techniques or other forms of information technology; *e.g.,* permitting electronic submission of responses).

Estimate of burden: Public reporting burden for this collection of information is estimated to average 10 minutes per response.

Respondents: Owners of fruit tree nurseries and owners of commercial stone fruit orchards.

Estimated annual number of respondents: 12.

Estimated annual number of responses per respondent: 1.

Estimated annual number of responses: 12.

Estimated total annual burden on respondents: 2 hours.

Copies of this information collection can be obtained from Ms. Laura Cahall, APHIS' Information Collection Coordinator, at (301) 734–5360.

List of Subjects in 7 CFR Part 301

Agricultural commodities, Plant diseases and pests, Quarantine, Reporting and recordkeeping requirements, Transportation.

Accordingly, we are amending 7 CFR part 301 as follows:

PART 301—DOMESTIC QUARANTINE NOTICES

1. The authority citation for part 301 continues to read as follows:

Authority: Title IV, Pub. L. 106–224, 114 Stat. 438, 7 U.S.C. 7701–7772; 7 U.S.C. 166; 7 CFR 2.22, 2.80, and 371.3.

2. In Subpart Plum Pox, a new § 301.74–5 is added to read as follows:

§ 301.74–5 Compensation.

(a) *Eligibility.* The following individuals are eligible to receive compensation from the U.S. Department of Agriculture to mitigate losses or expenses incurred because of the plum pox quarantine and emergency actions:

(1) *Owners of commercial stone fruit orchards.* The owner of a commercial stone fruit orchard will be eligible to receive compensation for losses associated with the destruction of trees

in order to control plum pox pursuant to an emergency action notification issued by the Animal and Plant Health Inspection Service (APHIS).

(2) *Owners of fruit tree nurseries.* The owner of a fruit tree nursery will be eligible to receive compensation for net revenue losses associated with the prohibition on the movement or sale of nursery stock as a result of the issuance of an emergency action notification by APHIS with respect to regulated articles within the nursery in order to control plum pox.

(b) *Amount of payment.* Upon approval of a claim submitted in accordance with paragraph (c) of this section, individuals eligible for compensation under paragraph (a) of this section will be paid at the rates indicated in this paragraph.

(1) *Owners of commercial stone fruit orchards.* Owners of commercial stone fruit orchards who meet the eligibility requirements of paragraph (a)(1) of this section will be compensated on a per-acre basis at a rate based on the age of the trees destroyed. If the trees were not destroyed by the date specified on the emergency action notification, the compensation payment will be reduced by 10 percent and by any tree removal costs incurred by the State or the U.S. Department of Agriculture (USDA). The maximum USDA compensation rate is 85 percent of the loss in value, adjusted for any State-provided compensation to ensure total compensation from all sources does not exceed 100 percent of the loss in value.

Age of trees (years)	Maximum compensation rate ($/acre, equal to 85% of loss in value)
1	4,805
2	7,394
3	9,429
4	12,268
5	14,505
6	14,918
7	15,000
8	14,709
9	14,383
10	14,015
11	13,601
12	13,136
13	12,613
14	12,024
15	11,361
16	10,616
17	9,854
18	9,073
19	8,272
20	7,446
21	6,594
22	5,789
23	5,035
24	4,341
25	3,713

(2) *Owners of fruit tree nurseries.* Owners of fruit tree nurseries who meet the eligibility requirements of paragraph (a)(2) of this section will be compensated for up to 85 percent of the net revenues lost from their first and second year crops as the result of the issuance of an emergency action notification which will be calculated as follows:

(i) *First year crop.* The net revenue loss for trees that were expected to be sold in the year during which the emergency action notification was issued (*i.e.,* the first year crop) will be calculated as *(expected number of trees to be sold)* × *(average price per tree)* − *(digging, grading, and storage costs)* = net revenue lost for first year crop, where:

(A) The expected number of trees to be sold equals the number of trees in the field minus 2 percent culls minus 3 percent unsold trees; and

(B) The average price per tree is $4.65; and

(C) Digging, grading and storage costs are $0.10 per tree.

(ii) *Second year crop.* The net revenue loss for trees that would be expected to be sold in the year following the year during which the emergency action notification was issued (*i.e.,* the second year crop) will be calculated as *(expected number of trees to be sold)* × *(average price per tree)* = net revenue lost for second year crop, where:

(A) The expected number of trees to be sold equals the number of budded trees in the field minus 20 percent death loss minus 2 percent culls; and

(B) The average price per tree is $4.65 for plum and apricot trees and $3.30 for peach and nectarine trees.

(c) *How to apply.* The form necessary to submit a claim for compensation may be obtained from the Plum Pox Cooperative Eradication Program, USDA, APHIS, PPQ, 401 East Louther Street, Suite 102, Carlisle, PA 17013–2625. The completed claim form must be sent to the same address. Claims for trees or nursery stock destroyed on or before the effective date of this rule must be received within 60 days after the effective date of this rule. Claims for trees or nursery stock destroyed after the effective date of this rule must be received within 60 days after the destruction of the trees or nursery stock. Claims must be submitted as follows:

(1) *Claims by owners of commercial stone fruit orchards.* The completed application must be accompanied by a copy of the PDA or APHIS document ordering the destruction of the trees, its accompanying inventory that describes the acreage and ages of trees removed, and documentation verifying that the destruction of trees has been completed and the date of that destruction.

(2) *Claims by owners of fruit tree nurseries.* The completed application must be accompanied by a copy of the order prohibiting the sale or movement of the nursery stock, its accompanying inventory that describes the total number of trees and the age and variety, and documentation describing the final disposition of the nursery stock.

(d) *Replanting.* Premises on which trees have been destroyed because of plum pox pursuant to an emergency action notification issued by APHIS may not be replanted with susceptible *Prunus* species (*Prunus* species identified as regulated articles) for 3 years.

(Approved by the Office of Management and Budget under control number 0579–0159)

Done in Washington, DC, this 11th day of September 2000.

Bobby R. Acord,

Acting Administrator, Animal and Plant Health Inspection Service.

[FR Doc. 00–23620 Filed 9–13–00; 8:45 am]

BILLING CODE 3410–34–P

DEPARTMENT OF AGRICULTURE

Agricultural Marketing Service

7 CFR Part 929

[Docket No. FV00–929–6 IFR]

Cranberries Grown in the States of Massachusetts, et al.; Temporary Suspension of Provisions in the Rules and Regulations

AGENCY: Agricultural Marketing Service, USDA.

ACTION: Interim final rule with request for comments.

SUMMARY: This rule suspends certain sections in the rules and regulations to shorten the appeals procedure for growers who disagree with their sales history determination made by the Cranberry Marketing Committee (Committee) for the 2000/2001 marketing season. Due to the lateness of the season, and the numerous appeals received, the Committee recommended

that review of the subcommittee's determination by the full Committee be suspended to shorten the appeal process during the current season. This time savings is important because harvest is expected to begin soon and final decisions need to be made so growers know how many cranberries handlers can buy from them under this season's volume regulation.

DATES: Effective September 15, 2000, through November 15, 2000. Comments received by November 13, 2000, will be considered prior to issuance of a final rule.

ADDRESSES: Interested persons are invited to submit written comments concerning this rule. Comments must be sent to the Docket Clerk, Fruit and Vegetable Programs, AMS, USDA, room 2525–S, PO Box 96456, Washington, DC 20090–6456; Fax: (202) 720–5698; or E-mail: moab.docketclerk@usda.gov. Comments should reference the docket number and the date and page number of this issue of the **Federal Register** and will be available for public inspection in the Office of the Docket Clerk during regular business hours or can be viewed at: http://www.ams.usda.gov/fv/moab.html.

FOR FURTHER INFORMATION CONTACT: Patricia A. Petrella or Kenneth G. Johnson, DC Marketing Field Office, Fruit and Vegetable Programs, AMS, USDA, Suite 2A04, Unit 155, 4700 River Road, Riverdale, Maryland 20737, telephone: (301) 734–5243; Fax: (301) 734–5275; or George Kelhart, Technical Advisor, Marketing Order Administration Branch, Fruit and Vegetable Programs, AMS, USDA, room 2525–S, PO Box 96456, Washington, DC 20090–6456; telephone: (202) 720–2491, Fax: (202) 720–5698. Small businesses may request information on complying with this regulation by contacting Jay Guerber, Marketing Order Administration Branch, Fruit and Vegetable Programs, AMS, USDA, P.O. Box 96456, room 2525–S, Washington, DC 20090–6456; telephone: (202) 720–2491, Fax: (202) 720–5698, or E-mail: Jay.Guerber@usda.gov.

SUPPLEMENTARY INFORMATION: This rule is issued under Marketing Order No. 929, as amended (7 CFR part 929), regulating the handling of cranberries grown in Massachusetts, Rhode Island, Connecticut, New Jersey, Wisconsin, Michigan, Minnesota, Oregon, Washington, and Long Island in the State of New York, hereinafter referred to as the ''order.'' The marketing order is effective under the Agricultural Marketing Agreement Act of 1937, as amended (7 U.S.C. 601–674), hereinafter referred to as the ''Act.''

The Department of Agriculture (Department) is issuing this rule in conformance with Executive Order 12866.

This rule has been reviewed under Executive Order 12988, Civil Justice Reform. This rule is not intended to have retroactive effect. This rule will not preempt any State or local laws, regulations, or policies, unless they present an irreconcilable conflict with this rule.

The Act provides that administrative proceedings must be exhausted before parties may file suit in court. Under section 608c(15)(A) of the Act, any handler subject to an order may file with the Secretary a petition stating that the order, any provision of the order, or any obligation imposed in connection with the order is not in accordance with law and request a modification of the order or to be exempted therefrom. Such handler is afforded the opportunity for a hearing on the petition. After the hearing the Secretary would rule on the petition. The Act provides that the district court of the United States in any district in which the handler is an inhabitant, or has his or her principal place of business, has jurisdiction to review the Secretary's ruling on the petition, provided an action is filed not later than 20 days after the date of the entry of the ruling.

This rule temporarily suspends provisions in § 929.125 of the rules and regulations (65 FR 42598, July 11, 2000) to shorten the sales history appeal process for the 2000/2001 marketing season. The Committee is responsible for calculating each grower's sales history on an annual basis. The appeals process includes three levels of review, a review by the appeals subcommittee of the Committee, the full Committee, and finally the Secretary of Agriculture. Due to the lateness of the season, and the numerous appeals received from growers, the Committee unanimously recommended that the review by the Committee be suspended for the 2000/2001 season. This will allow growers to take their appeals directly to the Secretary for a final decision. Final decisions need to be made promptly because the harvest is expected to begin in late September and growers need to know how many cranberries handlers can acquire from them. The Committee unanimously recommended this action at its August 28, 2000, meeting.

Section 929.48 of the order and § 929.149 of the rules and regulations describe how the Committee computes a sales history for each grower. There are different computations used depending on the number of years a grower has been producing on such acreage. The Committee has been updating growers' sales histories each season. The Committee accomplishes this by using information submitted by the grower on a production and eligibility report filed with the Committee. The Committee established a review procedure in § 929.125 of the rules and regulations for growers who disagree with the Committee's computation.

Currently, § 929.125 (65 FR 42598; July 11, 2000) provides that a grower may appeal to an appeals subcommittee within 30 days of receipt of the Committee's determination of his/her sales history. If the grower is not satisfied with the subcommittee's decision, the grower may further appeal to the full Committee. Such grower must notify the full Committee of his or her appeal within 15 days after notification of the subcommittee's decision. The Committee has 15 days to review the appeal. The grower may further appeal to the Secretary, within 15 days after notification of the full Committee's findings, if the grower is not satisfied with the Committee's decision. All decisions by the Secretary are final.

A volume regulation has been implemented for the 2000–2001 cranberry crop in order to address an oversupply situation currently being experienced by the industry. The Committee determined the best method of volume control to be the producer allotment program which provides for an annual marketable quantity and allotment percentage. Marketable quantity is defined as the number of pounds of cranberries needed to meet total demand and to provide for an adequate carryover into the next season. The allotment percentage equals the marketable quantity divided by the total of all growers' sales histories. The Committee is responsible for calculating each grower's sales history on an annual basis.

The appeals procedure as described above could take 60 or more days to complete, and the number of appeals received to date has been large. At the Committee meeting on August 28, 2000, the appeals committee reviewed about 150 grower appeals, and more need to be reviewed at this level.

Due to the lateness of the season, and the numerous appeals received, the Committee has recommended that the review by the full Committee be suspended from the procedures to shorten the process. Thus, growers will be able to take their appeals directly to the Secretary for a final decision if they are not satisfied with the appeals

subcommittee's determinations. Final decisions need to be made soon because the harvest is expected to begin in mid-September and growers need to know their sales histories and how much allotment they have available for market. Under the current procedure, some growers availing themselves of the full appeal process would not know their sales histories and the amount of annual allotment that can be acquired by their handler until after harvest was completed.

Therefore, the Committee recommended that the full Committee review step of the appeals process described in the rules and regulations be temporarily suspended through November 15, 2000, to expedite the process for the current harvest. The complete procedures will be available to growers next season, if needed.

The Regulatory Flexibility Act and Effects on Small Businesses

Pursuant to requirements set forth in the Regulatory Flexibility Act (RFA), the Agricultural Marketing Service (AMS) has considered the economic impact of this action on small entities. Accordingly, AMS has prepared this initial regulatory flexibility analysis.

The purpose of the RFA is to fit regulatory actions to the scale of business subject to such actions in order that small businesses will not be unduly or disproportionately burdened. Marketing orders issued pursuant to the Act, and rules thereunder, are unique in that they are brought about through group action of essentially small entities acting on their own behalf. Thus, both statutes have small entity orientation and compatibility.

There are approximately 20 handlers of cranberries who are subject to regulation under the order and approximately 1,100 producers of cranberries in the regulated area. Small agricultural service firms, which include handlers, are defined by the Small Business Administration (13 CFR 121.201) as those having annual receipts of less than $5,000,000, and small agricultural producers are defined as those having annual receipts of less than $500,000. The majority of cranberry handlers and producers may be classified as small businesses.

Currently, of the 1,100 cranberry growers, between 86 and 95 percent are estimated to have sales equal to or less than $500,000. Fewer than 60 growers are estimated to have sales that would have exceeded this threshold in 1999. Over two-thirds of the U.S. cranberry crop is handled by a grower-owned marketing cooperative. Five other major processors, together with the cooperative, handle over 97 percent of the crop. Using Committee data on volumes handled, AMS has determined that none of these handlers qualify as small businesses under the SBA's definition. The remainder of the crop is marketed by about a dozen grower-handlers who handle their own crops. Dividing the remaining 3 percent of the crop by these grower-handlers, all would be considered small businesses.

This rule temporarily suspends provisions in § 929.125 of the rules and regulations regarding the appeals procedure for growers who disagree with their sales history determination made by the Cranberry Marketing Committee (Committee). The Committee is responsible for calculating each grower's sales history on an annual basis. The appeals process includes a review by the appeals subcommittee, the full Committee, and finally the Secretary. Due to the lateness of the season, and the numerous appeals received, the Committee has recommended that the review by the full Committee be suspended from the procedures to shorten the process. Expeditious final decisions are needed because the 2000 crop harvest is expected to begin in mid-September. Growers need to know their sales histories and how much of their crop can acquired by handlers during the 2000–2001 season under volume regulation.

This action will allow growers, who have filed appeals, to know their sales histories and annual allotments sooner. Handlers need to know this information to plan their acquisitions throughout this crop year under volume regulation. In addition, the Committee has received over 200 appeals and needs to act on them quickly to render decisions as soon as possible.

The Committee discussed the alternative of delegating the Committee's review to the appeals subcommittee, however, such action is not authorized under the rules and regulations. The Committee also discussed not revising the rules and regulations, however, this would not allow the growers who have appealed to know their sales histories and annual allotment as promptly as possible.

This action imposes no additional reporting or recordkeeping requirements on either small or large cranberry handlers. As with all Federal marketing order programs, reports and forms are periodically reviewed to reduce information requirements and duplication by industry and public sector agencies.

The Department has not identified any relevant Federal rules that duplicate, overlap, or conflict with this rule.

Further, the Committee's meeting was widely publicized throughout the cranberry industry and all interested persons were invited to attend the meeting and participate in Committee deliberations on all issues. Like all Committee meetings, the August 28, 2000, meeting was a public meeting and all entities, both large and small, were able to express views on this issue. Finally, interested persons are invited to submit information on the regulatory and informational impacts of this action on small businesses.

A small business guide on complying with fruit, vegetable, and specialty crop marketing agreements and orders may be viewed at: http://www.ams.usda.gov/fv/moab.html. Any questions about the compliance guide should be sent to Jay Guerber at the previously mentioned address in the **FOR FURTHER INFORMATION CONTACT** section.

This rule invites comments on a temporary suspension of provisions in § 929.125 in the rules and regulations currently prescribed under the cranberry marketing order. Any comments received will be considered prior to finalization of this rule.

After consideration of all relevant material presented, including the information and recommendation submitted by the Committee and other available information, it is hereby found that this rule, as hereinafter set forth, will tend to effectuate the declared policy of the Act.

Pursuant to 5 U.S.C. 553, it is also found and determined upon good cause that it is impracticable, unnecessary, and contrary to the public interest to give preliminary notice prior to putting this rule into effect, and that good cause exists for not postponing the effective date of this rule until 30 days after publication in the **Federal Register** because: (1) The 1999–2000 crop harvest is expected to begin in mid-September and growers and handlers need to know their sales histories and annual allotments for delivery purposes; (2) growers and handlers are aware of this action which was unanimously recommended by the Committee at a public meeting; and (3) this interim final rule provides a 60-day comment period, and all comments timely received will be considered prior to finalization of this rule.

List of Subjects in 7 CFR Part 929

Marketing agreements, Cranberries, Reporting and recordkeeping requirements.

For the reasons set forth in the preamble, 7 CFR part 929 is amended as follows:

PART 929—CRANBERRIES GROWN IN THE STATES OF MASSACHUSETTS, RHODE ISLAND, CONNECTICUT, NEW JERSEY, WISCONSIN, MICHIGAN, MINNESOTA, OREGON, WASHINGTON, AND LONG ISLAND IN THE STATE OF NEW YORK

1. The authority citation for 7 CFR part 929 continues to read as follows:

Authority: 7 U.S.C. 601–674.

§ 929.125 [Amended]

2. Section 929.125 is amended by suspending the word ''Committee's'' everywhere it appears in paragraph (d) and suspending paragraph (c) in its entirety effective September 15, 2000, through November 15, 2000.

Dated: September 12, 2000.

Robert C. Keeney,

Deputy Administrator, Fruit and Vegetable Programs.

[FR Doc. 00–23821 Filed 9–12–00; 3:42 pm]

BILLING CODE 3410–02–U

NATIONAL CREDIT UNION ADMINISTRATION

12 CFR Part 702

Prompt Corrective Action; Correction

AGENCY: National Credit Union Administration (NCUA).

ACTION: Final Rule; corrections.

SUMMARY: Four technical errors appear in the part 702 final rule implementing a system of prompt corrective action for federally-insured credit unions. The first and second errors appear in the **Federal Register** of February 18, 2000, in a footnote to the supplementary information section and in the provision of subpart A entitled ''Net worth measures,'' respectively. The third and fourth errors appear in the **Federal Register** of July 20, 2000, in the supplementary information section entitled ''Impact of Final Rule'' and in the instruction to amend the provision of subpart C entitled ''Net worth categories,'' respectively. This final rule corrects these errors and makes no substantive change to part 702.

DATES: Effective January 1, 2001.

FOR FURTHER INFORMATION CONTACT: Steven W. Widerman, Trial Attorney, Office of General Counsel, telephone 703/518–6557, National Credit Union Administration, 1775 Duke Street, Alexandria, VA 22314–3428.

SUPPLEMENTARY INFORMATION:

In the final rule document 00–3276, published on February 18, 2000 (65 FR 8560), the following corrections are made:

1. On page 8575, third column, footnote 19, remove from the second sentence the words ''or liquidation'' and the citation ''1787(a)(1)(b)''.

§ 702.101 [Amended]

2. On page 8585, first column, § 702.101(a)(2), add the words ''If determined to be applicable under § 702.103, a'' in paragraph (a)(2) in place of the words ''If defined as 'complex' under § 702.104, the applicable.''

In the final rule document 00–18278, published on July 20, 2000 (65 FR 44950), the following corrections are made:

1. On page 44964, second column, second full sentence following the heading ''E. Impact of Final Rule,'' add ''.008 percent'' in place of ''2.3 percent'', and add ''.0011 percent'' in place of ''.08 percent''.

2. Correct amendatory instruction 8 on page 44974 to read as follows: 8. Section 702.302 is amended by removing the phrase ''and any risk-based net worth requirement applicable to a new credit union defined as 'complex' under §§ 702.103 through 702.106'' from paragraph (a); by removing the phrase ''and also meets any applicable risk-based net worth requirement under §§ 702.105 and 702.106'' from paragraphs (c)(1) and (c)(2); and by removing the phrase ''or fails to meet any applicable risk-based net worth requirement under §§ 702.105 and 702.106'' from paragraph (c)(3).

By the National Credit Union Administration Board on September 5, 2000.

Becky Baker,

Secretary of the Board.

[FR Doc. 00–23465 Filed 9–13–00; 8:45 am]

BILLING CODE 7535–01–U

NATIONAL CREDIT UNION ADMINISTRATION

12 CFR Part 709

Involuntary Liquidation of Federal Credit Unions and Adjudication of Creditor Claims Involving Federally-Insured Credit Unions in Liquidation

AGENCY: National Credit Union Administration.

ACTION: Final rule.

SUMMARY: The National Credit Union Administration (NCUA) is issuing a final rule regarding the treatment by the NCUA Board (Board), as conservator or liquidating agent, of financial assets transferred by a federally-insured credit union to another party in connection with a securitization or in the form of a participation. The final rule generally provides that the Board will not, by exercise of its statutory power to repudiate contracts, recover, reclaim, or recharacterize as property of the credit union or the liquidation estate financial assets that were transferred by the credit union to another party in connection with a securitization or in the form of a participation. The final rule also addresses the treatment by the Board, as conservator or liquidating agent, of agreements entered into by a federally-insured credit union (FICU) to collateralize public funds. The rule establishes that the Board will not seek to avoid an otherwise legally enforceable security interest in collateral for public funds solely because the collateral was not acquired contemporaneously with the approval and execution of the security agreement. The Board will also not seek to avoid a security interest solely because the collateral was changed, increased or subject to substitution from time to time.

DATES: This rule is effective October 16, 2000.

FOR FURTHER INFORMATION CONTACT: Chrisanthy J. Loizos, Staff Attorney, Division of Operations, Office of General Counsel, National Credit Union Administration, 1775 Duke Street, Alexandria, Virginia 22314–3428, or telephone: (703) 518–6540.

SUPPLEMENTARY INFORMATION: The Board issued a proposed rule on February 24, 2000 addressing two issues concerning its authority as a conservator or liquidating agent to repudiate or avoid certain agreements. 65 FR 11250 (March 2, 2000). First, the Board examined whether its statutory authority to repudiate contracts under sections 207 and 208 of the Federal Credit Union Act (the Act) would prevent a transfer of financial assets by a FICU during a securitization or a participation from satisfying the ''legal isolation'' condition. To address this issue, the Board proposed a new § 709.10. The Board incorporates its analysis of § 709.10 provided in the preamble of the proposed rule. The Board notes that its final rule is substantially identical to a final rule recently issued by the FDIC in which the FDIC addressed this same issue as to federally-insured banks. 65 FR 49189 (Aug. 11, 2000). Second, the proposed rule also considered the Board's authority to avoid a legally enforceable security interest in collateral for public funds during a

conservatorship or liquidation. To address this issue, the Board proposed a new § 709.11. The following discussion separately addresses the two new sections, providing background, a review of comments, and a description of minor changes from the proposed rule.

Section 709.10

Background

Under generally accepted accounting principles, a transfer of financial assets is accounted for as a sale if the transferor surrenders control over the assets. One of the conditions for determining whether the transferor has surrendered control is that the assets have been isolated from the transferor, in other words, put presumptively beyond the reach of the transferor, its creditors, a trustee in bankruptcy, or a receiver. This is known as the ''legal isolation'' condition. *See* Financial Accounting Standards Board's Statement of Financial Accounting Standards No. 125 (SFAS 125).

When acting as a conservator or liquidating agent, the Board has the statutory authority to repudiate credit union contracts under section 207(c) of the Act. 12 U.S.C. 1787(c). In addition, no agreement that tends to diminish or defeat NCUA's interest, as a liquidating agent, in an asset acquired from a federally-insured credit union is enforceable against NCUA unless the requirements of section 208(a)(3) of the Act are met. 12 U.S.C. 1787(b)(9), 1788(a)(3). One particular requirement is that the agreement must have been executed contemporaneously with the FICU's acquisition of the asset. 12 U.S.C. 1788(a)(3)(B).

When a FICU is the transferor of financial assets in a securitization or in the form of a participation, two issues arise that may prevent these transferred assets from meeting the ''legal isolation'' condition. The first is whether NCUA, when acting as a conservator or a liquidating agent, might avoid the transfer of financial assets by the credit union and recover such assets; and the second is whether NCUA might challenge the enforceability of an agreement that transfers financial assets but fails to meet the contemporaneous requirement of section 208(a)(3) of the Act.

The final rule provides that the Board will not use its authority to repudiate contracts under 12 U.S.C. 1787(c) to reclaim, recover, or recharacterize financial assets transferred by a FICU in connection with a securitization or in the form of a participation. Such assets may be accounted for as a sale, provided the transaction meets all of the requirements in SFAS 125. The Board's repudiation of a securitization or participation will not affect transferred financial assets but will excuse the Board from performing any continuing obligations imposed by the securitization or participation.

The final rule further provides that NCUA will not attempt to avoid an otherwise legally enforceable securitization agreement or participation agreement solely because the agreement does not meet the contemporaneous requirement of sections 207(b)(9) and 208(a)(3) of the Act. The final rule applies only to securitizations or participations in which the transfer of financial assets meets all of the conditions for sale accounting treatment under generally accepted accounting principles, other than the ''legal isolation'' condition.

The final rule defines ''participation'' as a transfer of an interest in a loan or a lease without recourse by the buyer against the lead. The Board wishes to clarify the term ''without recourse.'' The issue is whether aspects of recourse within a transaction, such as guaranties of quality or collectibility on the underlying obligation, jeopardize the transaction's characterization as a true sale or true participation agreement. Courts generally view a transaction as a participation only if the participant does not have recourse against the lead when a default occurs on the underlying obligation. *See, e.g., In re Sackman Mortgage Corp.,* 158 B.R. 926, 931–34 (Bankr. S.D.N.Y. 1993). However, the presence of recourse does not necessarily require that a transaction be characterized as a security interest instead of as a sale. *See Major's Furniture Mart, Inc.* v. *Castle Credit Corporation, Inc.,* 602 F.2d 538 (3rd Cir. 1979). Courts look to the nature of the recourse, the allocation of risk, and the general nature of the transaction. *Id.*

The rule is intended to cover participations that impose limited recourse conditions on the lead without shifting all of the risks of loss or obligations of ownership. Specifically, the rule will apply to participations in which: (a) The lead retained a limited subordinated interest in the obligation, against which losses are initially allocated; (b) the lead participated in a loan in order to avoid a statutory lending limit violation, with the option of reacquiring the transferred interest when reacquisition would not result in a lending limit violation; or (c) the participation agreement provided for repurchase or compensation in connection with customary representations and warranties regarding the underlying asset.

Comments

The comment period ended April 3, 2000. Nine comments were received on proposed § 709.10. Comments were submitted by five corporate credit unions, two national credit union trade associations, and two state credit union leagues. All nine commenters strongly supported the adoption of the proposed section.

One commenter requested that the definition of ''without recourse'' permit corporate credit unions to establish reserve accounts for loan participations, if 12 CFR part 704 is amended to allow corporate credit unions to enter into these transactions with their members. On July 22, 1999, the Board issued an advance notice of proposed rulemaking regarding amendments to part 704. 64 FR 40787 (July 28, 1999). Any issues related to the scope of § 709.10(a)(4) for corporate credit union loan participations with natural person credit unions should be addressed during that rulemaking.

The final rule is identical to the proposed rule except for the following changes. The proposed rule's definition of the term ''participation'' included language that referred to ''the borrower's default'' in describing the meaning of the term ''without recourse.'' Since a participation may involve a lease as well as a loan, the final rule refers to ''a default on the underlying obligation'' instead of ''the borrower's default.'' In addition, the definition of ''special purpose entity'' now conforms to the amended version of SFAS 125 by using the phrase ''demonstrably distinct'' instead of ''distinct standing at law'' within the definition.

Section 709.11

Background

The Act authorizes federal credit unions and FICUs to be depositories of public money. 12 U.S.C. 1767, 1789a. Federal credit unions may receive payments, representing equity, on shares, share certificates and share draft accounts from nonmember units of federal, state, local or tribal governments and political subdivisions as enumerated in section 207(k)(2)(A) of the Act. 12 U.S.C. 1757(6). As a public depository, a federal credit union may pledge any of its assets to secure the payment of the public funds. 12 U.S.C. 1767(b).

On April 30, 1993, the FDIC issued its ''Statement of Policy Regarding Treatment of Security Interests After Appointment of the Federal Deposit

Insurance Corporation as Conservator or Receiver'' (Statement of Policy) addressing the enforceability of security interests that secure public deposits in banks. It stated that the FDIC, when acting as conservator or receiver, would not seek to avoid an otherwise legally enforceable and perfected security interest solely because the security agreement granting or creating the security interest did not meet the ''contemporaneous'' requirements of sections 11(d)(9), 11(n)(4)(I), and 13(e) of the Federal Deposit Insurance Act. Congress enacted the tenor of FDIC's policy statement in section 317 of the Riegle Community Development and Regulatory Improvement Act of 1994. 12 U.S.C. 1823(e)(2).

Similarly, the Board believes it should limit its extraordinary authority as a conservator or liquidating agent with special provisions for security interests related to public funds. This will allow FICUs to offer governmental depositors the same protections the Federal Deposit Insurance Act provides for deposits in banks. The final rule establishes that the Board, acting as conservator or liquidating agent, will not seek to avoid an otherwise legally enforceable security interest in collateral for public funds solely because the collateral was not acquired contemporaneously with the approval and execution of the security agreement or was changed, increased or subject to substitution from time to time.

Comments

The Board received two comments on proposed § 709.11, one from a state credit union regulator and the other from an association representing state credit union regulators nationwide. Both commenters supported the adoption of this section, but suggested a variety of amendments to the proposal.

The commenters requested that the phrase ''lawful collateralization'' be defined to mean that state and federal laws, rules, regulations and interpretive statements determine whether a security interest has been lawfully collateralized. The commenters also noted that the creation of an enforceable and perfected security interest in the collateral should not be required for a ''lawful collateralization.'' The commenters suggested that not all state laws require security interests provided in connection with public deposits to be perfected. The Board believes that the phrase ''lawful collateralization'' is self-explanatory and does not need to be defined in the rule. Furthermore, this phrase is consistent with 12 U.S.C. 1823(e)(2). The Board recognizes that state laws vary regarding security interests and, therefore, will look to applicable local and federal laws and regulations to determine whether a security interest has been lawfully collateralized for purposes of this rule.

The commenters requested that both sections within the Act addressing the Board's authority to repudiate contracts during conservatorships or liquidations be cited in the regulation, likewise with the references used in § 709.10(f). The Board agrees and has included the statutory reference in the final rule. The commenters also suggested that the rule establish that any repeal or amendment of the rule will not apply to any collateral already provided in a collateralization agreement. Section 709.11 does not contain a provision for repeal upon 30-day notice by the Board like the provision in § 709.10(g). The Board believes that a provision of this sort is unnecessary because any amendment of the rule would not apply retroactively.

The commenters also requested clarification on two points. They stated that the rule should clearly provide that NCUA either: (1) Will not seek to avoid or repudiate a security agreement and the collateralization or security interest created thereunder; or (2) will not recover, reclaim or recharacterize any assets, securities or other collateral subject to a security agreement tied to the deposit of public funds. Like 12 U.S.C. 1823(e)(2), the final rule provides that the Board will not invalidate a governmental depositor's security interest in collateral used to secure public funds merely because the security agreement fails to meet the contemporaneous requirements of section 208(a)(3) of the Act. The Board maintains that this language is satisfactory and consistent with the treatment of public deposits within federally-insured banks.

The commenters also requested that the rule expressly establish that it applies to increases or substitutions of collateral occurring after the agreement has been entered into by the governmental depositor and the credit union. The Board agrees and has made the clarification in the final rule.

Finally, in the Statement of Policy discussed above, the FDIC assumed that a bank's agreement met certain criteria before the FDIC would determine not to avoid a security interest during a conservatorship or receivership. The FDIC identified the following conditions: (1) The agreement was undertaken in the ordinary course of business, not in contemplation of insolvency, and with no intent to hinder, delay or defraud the depository institution or its creditors; (2) the secured obligation represented a bona fide and arm's length transaction; (3) the secured party or parties were not insiders or affiliates of the depository institution; (4) the grant or creation of the security interest was for adequate consideration; and (5) the security agreement evidencing the security interest was in writing, approved by the bank's board of directors or loan committee (which approval is reflected in the minutes of a meeting of the board of directors or committee) and has been, continuously from the time of its execution, an official record of the depository institution. 58 FR 16833 (March 31, 1993). For clarity, the Board has decided to incorporate these five assumptions directly into the final rule.

Regulatory Procedures

Paperwork Reduction Act

NCUA has determined that the rule does not increase paperwork requirements under the Paperwork Reduction Act of 1995 and regulations of the Office of Management and Budget.

The Regulatory Flexibility Act

The Regulatory Flexibility Act requires NCUA to prepare an analysis to describe any significant economic impact any final regulation may have on a substantial number of small entities (those under $1 million in assets). The final rule addresses the manner in which the Board will enforce its rights as a conservator or liquidating agent when evaluating financial assets transferred during a securitization or participation, or reviewing the collateralization of public funds. The final rule does not impose any reporting or recordkeeping burdens that are not already a function of entering into such transactions. Therefore, the Board certifies that this final rule will not have a significant economic impact on a substantial number of small credit unions.

Small Business Regulatory Enforcement Fairness Act

The Small Business Regulatory Enforcement Fairness Act of 1996 (Pub. L. 104–121) provides generally for congressional review of agency rules. A reporting requirement is triggered in instances where NCUA issues a final rule as defined by Section 551 of the Administrative Procedures Act. 5 U.S.C. 551. The Office of Management and Budget has determined that this is not a major rule.

Executive Order 13132

Executive Order 13132 encourages independent regulatory agencies to consider the impact of their regulatory actions on state and local interests. In adherence to fundamental federalism principles, NCUA, an independent regulatory agency as defined in 44 U.S.C. 3502(5), voluntarily complies with the executive order. This final rule applies to all federally-insured credit unions, but it will not have substantial direct effects on the states, on the relationship between the national government and the states, or on the distribution of power and responsibilities among the various levels of government. NCUA has determined that the final rule does not constitute a policy that has federalism implications for purposes of the executive order.

The Treasury and General Government Appropriations Act, 1999—Assessment of Federal Regulations and Policies on Families

The NCUA has determined that this rule will not affect family well-being within the meaning of section 654 of the Treasury and General Government Appropriations Act, 1999, Pub. L. 105–277, 112 Stat. 2681 (1998).

Agency Regulatory Goal

NCUA's goal is to promulgate clear and understandable regulations that impose a minimal regulatory burden. We requested comments on whether the proposed rules were understandable and minimally intrusive if implemented as proposed. We received no specific comment on this issue.

List of Subjects in 12 CFR Part 709

Credit unions, Liquidations.

By the National Credit Union Administration Board on September 7, 2000.

Becky Baker,

Secretary of the Board.

For the reasons set out in the preamble, the NCUA amends 12 CFR part 709 as follows:

PART 709—INVOLUNTARY LIQUIDATION OF FEDERAL CREDIT UNIONS AND ADJUDICATION OF CREDITOR CLAIMS INVOLVING FEDERALLY-INSURED CREDIT UNIONS IN LIQUIDATION

1. The authority citation for part 709 is revised to read as follows:

Authority: 12 U.S.C. 1757, 1766, 1767, 1786(h), 1787, 1788, 1789, 1789a.

2. Amend § 709.0 by revising the first sentence to read as follows:

§ 709.0 Scope.

The rules and procedures set forth in this part apply to charter revocations of federal credit unions under 12 U.S.C. 1787(a)(1)(A), (B), the involuntary liquidation and adjudication of creditor claims in all cases involving federally-insured credit unions, the treatment by the Board as conservator or liquidating agent of financial assets transferred in connection with a securitization or participation, and the treatment by the Board as conservator or liquidating agent of public funds held by a federally-insured credit union. * * *

3. Add § 709.10 to part 709 to read as follows:

§ 709.10 Treatment by conservator or liquidating agent of financial assets transferred in connection with a securitization or participation.

(a) *Definitions.* (1) *Beneficial interest* means debt or equity (or mixed) interests or obligations of any type issued by a special purpose entity that entitle their holders to receive payments that depend primarily on the cash flow from financial assets owned by the special purpose entity.

(2) *Financial asset* means cash or a contract or instrument that conveys to one entity a contractual right to receive cash or another financial instrument from another entity.

(3) *Legal isolation* means that transferred financial assets have been put presumptively beyond the reach of the transferor, its creditors, a trustee in bankruptcy, or a receiver, either by a single transaction or a series of transactions taken as a whole.

(4) *Participation* means the transfer or assignment of an undivided interest in all or part of a loan or a lease from a seller, known as the ''lead,'' to a buyer, known as the ''participant,'' without recourse to the lead, under an agreement between the lead and the participant. *Without recourse* means that the participation is not subject to any agreement that requires the lead to repurchase the participant's interest or to otherwise compensate the participant due to a default on the underlying obligation.

(5) *Securitization* means the issuance by a special purpose entity of beneficial interests:

(i) The most senior class of which at time of issuance is rated in one of the four highest categories assigned to long-term debt or in an equivalent short-term category (within either of which there may be sub-categories or gradations indicating relative standing) by one or more nationally recognized statistical rating organizations; or

(ii) Which are sold in transactions by an issuer not involving any public offering for purposes of section 4 of the Securities Act of 1933, as amended, or in transactions exempt from registration under such Act under 17 CFR 230.91 through 230.905 (Regulation S) thereunder (or any successor regulation).

(6) *Special purpose entity* means a trust, corporation, or other entity demonstrably distinct from the federally-insured credit union that is primarily engaged in acquiring and holding (or transferring to another special purpose entity) financial assets, and in activities related or incidental thereto, in connection with the issuance by such special purpose entity (or by another special purpose entity that acquires financial assets directly or indirectly from such special purpose entity) of beneficial interests.

(b) The Board, by exercise of its authority to disaffirm or repudiate contracts under 12 U.S.C. 1787(c), will not reclaim, recover, or recharacterize as property of the credit union or the liquidation estate any financial assets transferred to another party by a federally-insured credit union in connection with a securitization or participation, provided that a transfer meets all conditions for sale accounting treatment under generally accepted accounting principles, other than the ''legal isolation'' condition addressed by this section.

(c) Paragraph (b) of this section will not apply unless the federally-insured credit union received adequate consideration for the transfer of financial assets at the time of the transfer, and the documentation effecting the transfer of financial assets reflects the intent of the parties to treat the transaction as a sale, and not as a secured borrowing, for accounting purposes.

(d) Paragraph (b) of this section will not be construed as waiving, limiting, or otherwise affecting the power of the Board, as conservator or liquidating agent, to disaffirm or repudiate any agreement imposing continuing obligations or duties upon the federally-insured credit union in conservatorship or the liquidation estate.

(e) Paragraph (b) of this section will not be construed as waiving, limiting or otherwise affecting the rights or powers of the Board to take any action or to exercise any power not specifically limited by this section, including, but not limited to, any rights, powers or remedies of the Board regarding transfers taken in contemplation of the credit union's insolvency or with the intent to hinder, delay, or defraud the

credit union or the creditors of such credit union, or that is a fraudulent transfer under applicable law.

(f) The Board will not seek to avoid an otherwise legally enforceable securitization agreement or participation agreement executed by a federally-insured credit union solely because such agreement does not meet the ''contemporaneous'' requirement of sections 207(b)(9) and 208(a)(3) of the Federal Credit Union Act.

(g) This section may be repealed by the NCUA upon 30 days notice and opportunity for comment provided in the **Federal Register**, but any such repeal or amendment will not apply to any transfers of financial assets made in connection with a securitization or participation that was in effect before such repeal or modification. For purposes of this paragraph, a securitization would be in effect on the earliest date that the most senior level of beneficial interests is issued, and a participation would be in effect on the date that the parties executed the participation agreement.

4. Add § 709.11 to part 709 to read as follows:

§ 709.11 Treatment by conservator or liquidating agent of collateralized public funds.

An agreement to provide for the lawful collateralization of funds of a federal, state, or local governmental entity or of any depositor or member referred to in section 207(k)(2)(A) of the Act will not be deemed to be invalid under sections 207(b)(9) and 208(a)(3) of the Act solely because such agreement was not executed contemporaneously with the acquisition of collateral or with any changes, increases, or substitutions in the collateral made in accordance with such agreement, provided the following conditions are met:

(a) The agreement was undertaken in the ordinary course of business, not in contemplation of insolvency, and with no intent to hinder, delay or defraud the credit union or its creditors;

(b) The secured obligation represents a bona fide and arm's length transaction;

(c) The secured party or parties are not insiders or affiliates of the credit union;

(d) The grant or creation of the security interest was for adequate consideration; and,

(e) The security agreement evidencing the security interest is in writing, was approved by the credit union's board of directors, and has been continuously an official record of the credit union from the time of its execution.

[FR Doc. 00–23463 Filed 9–13–00; 8:45 am]

BILLING CODE 7535–01–P

DEPARTMENT OF TRANSPORTATION

Federal Aviation Administration

14 CFR Part 25

[Docket No. NM174; Special Conditions No. 25–164–SC]

Special Conditions: Boeing Model 737–700 IGW; Interaction of Systems and Structures.

AGENCY: Federal Aviation Administration (FAA), DOT.

ACTION: Final special conditions; request for comments.

SUMMARY: These special conditions are issued for the Boeing 737–700IGW airplane as modified by Aviation Partners Supplemental Type Certificate (STC). The modified airplane will have a novel or unusual design feature involving installation of winglets on the wing tips of the airplane which require the use of an existing system to limit yawing maneuvers at higher speeds thereby reducing the design loads for the winglets. The applicable airworthiness regulations for the Boeing 737–700IGW do not contain adequate or appropriate safety standards for systems which alleviate loads on structures. These special conditions contain the additional safety standards that the Administrator considers necessary to establish a level of safety equivalent to that established by the applicable airworthiness standards.

DATES: The effective date of these special conditions is August 30, 2000. Comments must be received on or before October 30, 2000.

ADDRESSES: Comments on these special conditions may be mailed in duplicate to: Federal Aviation Administration, Transport Airplane Directorate, Aircraft Certification Service, Attention: Rules Docket (ANM–114), Docket No. NM174, 1601 Lind Avenue SW., Renton, Washington 98055–4056; or delivered in duplicate to the Transport Airplane Directorate at the above address. Comments must be marked: Docket No. NM174. Comments may be inspected in the Rules Docket weekdays, except Federal holidays, between 7:30 a.m. and 4:00 p.m.

FOR FURTHER INFORMATION CONTACT: James Haynes, FAA, Transport Airplane Directorate, Aircraft Certification Service, Airframe/Cabin Safety Branch, ANM–115, 1601 Lind Avenue, SW., Renton, Washington 98055–4056; telephone (425) 227–2131; facsimile (425) 227–1320.

SUPPLEMENTARY INFORMATION: The FAA has determined that notice and opportunity for prior public comment hereon are impracticable because these procedures would significantly delay issuance of the approval design and thus delivery of the affected aircraft. In addition, the substance of these special conditions has been subject to the public comment process in several prior instances with no substantive comments received. The FAA therefore finds that good cause exists for making these special conditions effective upon issuance.

Comments Invited

Interested persons are invited to submit such written data, views, or arguments, as they may desire. Communications should identify the regulatory docket or notice number and be submitted in duplicate to the address specified above. All communications received on or before the closing date for comments will be considered by the Administrator. The special conditions may be changed in light of the comments received. All comments received will be available in the Rules Docket for examination by interested persons, both before and after the closing date for comments. A report summarizing each substantive public contact with FAA personnel concerning this rulemaking will be filed in the docket. Commenters wishing the FAA to acknowledge receipt of their comments submitted in response to this request must include a self-addressed, stamped postcard on which the following statement is made: ''Comments to Docket No. NM174.'' The postcard will be date stamped and returned to the commenter.

Background

On January 15, 1998, Aviation Partners applied for an STC to install winglets on the wingtips of the Boeing Model 737–700IGW airplane listed in Type Certificate No. A16WE. These winglets must be designed to aerodynamic loads associated with the yawing maneuver conditions of 14 CFR 25.351. Aviation Partners will make use of the load relief during yawing maneuvers provided by an existing system on the airplane that limits rudder authority thereby reducing the design loads for the winglets.

The Boeing Model 737–700IGW is an increased gross weight version of the Boeing Model 737–700 airplane commonly known as the Boeing Business Jet (BBJ). The Model 737–700IGW is a hybrid model which combines the Model 737–700 fuselage with the Model 737–800 wing and landing gear. The airplane is intended for private use such as the business or

VIP markets. The airplane uses a crew of two and the passenger capacity depends on the interior design which will vary by customer. Aviation Partners is further modifying the Boeing 737–700IGW by installing blended winglets to improve performance.

The Boeing 737–700IGW airplane, has an existing rudder pressure limiter (RPL) system that limits the rudder authority at high speeds when full authority is not needed. This system is part of the Boeing type design for all the 737NG (new generation) airplanes and is not changed by the Aviation Partners modifications, which mainly installs blended winglets. At low airspeeds where full rudder authority is needed to provide directional control with an engine failed, full hydraulic pressure is available to both actuator pistons within the main rudder power control unit (PCU). However, above 137 knots calibrated airspeed (KCAS), the RPL system reduces the rudder authority by limiting pressure to one of the systems that control the rudder. When functioning properly, this effectively reduces the design loads on the winglets when applying the yawing maneuvers prescribed by § 25.351. The existing rules adequately cover the design for the case with the RPL system functioning properly and the safety factor of 1.5 as prescribed by § 25.303, is applied to these design loads. However, when the system is failed, the airplane can be subjected to higher rudder displacements, greater yawing conditions, and larger loads on the winglets. Since the regulations do not provide specific safety factors to use for design in this system failure state, these special conditions are necessary.

The RPL system for the modified Boeing Model 737–700IGW airplane, although not specifically designed for this purpose, will alleviate the design loads for the winglets when it functions properly. Special conditions which provide factors of safety for system failure cases have been previously issued for many airplane models that have load alleviation systems (i.e. systems specifically designed to alleviate loads) and these same special conditions are issued for use on the Aviation Partners modified Boeing Model 737–700IGW airplane.

Type Certification Basis

Under the provisions of § 21.101, Aviation Partners must show that the Boeing Model 737–700IGW, as changed, continues to meet the applicable provisions of the regulations incorporated by reference in Type Certificate No. A16WE, or the applicable regulations in effect on the date of application for the change. The regulations incorporated by reference in the type certificate are commonly referred to as the ''original type certification basis.'' The regulations incorporated by reference in Type Certificate No. A16WE are as follows:

Part 25, as amended by Amendments 25–1 through 25–77. In addition, the certification basis includes certain special conditions unrelated to these special conditions, later elected amendments for certain sections, and reversions to earlier amendments for certain sections. Sections 25.351 ''Yawing conditions'' and 25.303 ''Factor of safety,'' which are relevant to these special conditions, are elected at amendment level 25–86 and 25–77 respectively.

If the Administrator finds that the applicable airworthiness regulations (*i.e.,* part 25, as amended) do not contain adequate or appropriate safety standards for the Boeing Model 737–700IGW because of a novel or unusual design feature, special conditions are prescribed under the provisions of § 21.16 to establish a level of safety equivalent to that established in the regulations.

In addition to the applicable airworthiness regulations and special conditions, the Boeing Model 737–700IGW must comply with the fuel vent and exhaust emission requirements of 14 CFR part 34 and the noise certification requirements of 14 CFR part 36; and the FAA must issue a finding of regulatory adequacy pursuant to § 611 of Public Law 92–574, the ''Noise Control Act of 1972.''

Special conditions, as appropriate, are issued in accordance with § 11.49, as required by §§ 11.28 and 11.29(b), and become part of the type certification basis in accordance with § 21.101(b)(2).

Novel or Unusual Design Features

The Boeing Model 737–700IGW as modified by Aviation Partners will incorporate the following novel or unusual design features:

Winglets will be installed on the wing tips which must be designed for the yaw maneuver conditions of § 25.351. Aviation Partners will take advantage of an existing rudder limiting system on the airplane that will limit the required design loads to reduced levels. The regulations do not provide adequate criteria governing the safety margins required for systems that affect design loads when they fail. Previously, special conditions have been issued for new model airplanes which have systems which are specifically designed for the purpose of alleviating design loads. In the case of the Aviation Partners winglet installation, the existing rudder limiting system on the Boeing Model 737–700IGW was not specifically designed for the purpose of alleviating the design loads, but it will provide such relief and Aviation Partners will take advantage of it in the structural design of the winglets. These special conditions prescribe structural design factors of safety for the winglets to be applied to loads produced at the time of failure of the rudder limiting system and for loads occurring during continued operation with the system failed.

Conclusion

This action affects only certain novel or unusual design features on one model airplane. It is not a rule of general applicability and affects only the applicant who applied to the FAA for approval of these features on the airplane.

The substance of these special conditions has been subjected to the notice and comment period in several prior instances and has been derived without substantive change from those previously issued. It is unlikely that prior public comment would result in a significant change from the substance contained herein. For this reason, and because a delay would significantly affect the certification of the Aviation Partners modified Boeing Model 737–700IWG airplane, which is imminent, the FAA has determined that prior public notice and comment are unnecessary and impracticable, and good cause exists for adopting these special conditions upon issuance. The FAA is requesting comments to allow interested persons to submit views that may not have been submitted in response to the prior opportunities for comment described above. Under standard practice, the effective date of final special conditions is 30 days after the date of publication in the **Federal Register**; however, because of the above reasons, the FAA finds that good cause exists to make these special conditions effective upon issuance.

List of Subjects in 14 CFR Part 25

Aircraft, Aviation Safety, Reporting and recordkeeping requirements.

The authority citation for these special conditions is as follows:

Authority: 49 U.S.C. 106(g), 40113, 44701, 44702, 44704.

The Special Conditions

Accordingly, pursuant to the authority delegated to me by the Administrator, the following special conditions are issued as part of the type certification basis for Boeing Model

737–700IGW airplanes modified by Aviation Partners.

I. *Interaction of Systems and Structures.* The following criteria must be used for showing compliance for the Aviation Partners winglet modification to the Boeing Model 737–700IGW airplane. The criteria apply to the structural design of the winglets under the conditions of normal operation and failures of the rudder pressure limiter system that affects the yawing maneuver conditions.

(a) The criteria defined herein only address the direct structural consequences of the system responses and performances and cannot be considered in isolation but should be included in the overall safety evaluation of the airplane. These criteria may in some instances duplicate standards already established for this evaluation. Specific criteria that define acceptable limits on handling characteristics or stability requirements when operating in the system degraded or inoperative mode are not provided in this special condition.

(b) Depending upon the specific characteristics of the airplane, additional studies may be required that go beyond the criteria provided in this special condition in order to demonstrate the capability of the airplane to meet other realistic conditions such as alternative gust or maneuver descriptions for an airplane equipped with a load alleviation system.

(c) The following definitions are applicable to this special condition.

Structural performance: Capability of the airplane to meet the structural requirements of part 25. Flight limitations: Limitations that can be applied to the airplane flight conditions following an in-flight occurrence and that are included in the flight manual (*e.g.,* speed limitations, avoidance of severe weather conditions, etc.).

Operational limitations: Limitations, including flight limitations, that can be applied to the airplane operating conditions before dispatch (*e.g.,* fuel, payload and Master Minimum Equipment List limitations).

Probabilistic terms: The probabilistic terms (probable, improbable, extremely improbable) used in this special condition are the same as those used in § 25.1309.

Failure condition: The term failure condition is the same as that used in § 25.1309, however this special condition applies only to system failure conditions that affect the structural performance of the airplane (*e.g.,* system failure conditions that induce loads, change the response of the airplane to inputs such as gusts or pilot actions, or lower flutter margins).

II. *Effects of Systems on Structures.* The following criteria will be used in determining the influence of a system and its failure conditions on the airplane structure.

(a) System fully operative. With the system fully operative, the following apply:

(1) Limit loads must be derived in all normal operating configurations of the system from all the limit conditions specified in Subpart C of part 25, taking into account any special behavior of such a system or associated functions or any effect on the structural performance of the airplane that may occur up to the limit loads. In particular, any significant nonlinearity (rate of displacement of control surface, thresholds or any other system nonlinearities) must be accounted for in a realistic or conservative way when deriving limit loads from limit conditions.

(2) The airplane must meet the strength requirements of part 25 (static strength, residual strength), using the specified factors to derive ultimate loads from the limit loads defined above. The effect of nonlinearities must be investigated beyond limit conditions to ensure the behavior of the system presents no anomaly compared to the behavior below limit conditions. However, conditions beyond limit conditions need not be considered when it can be shown that the airplane has design features that will not allow it to exceed those limit conditions.

(3) The airplane must meet the aeroelastic stability requirements of § 25.629.

(b) System in the failure condition. For any system failure condition not shown to be extremely improbable, the following apply:

(1) At the time of occurrence. Starting from 1–g level flight conditions, a realistic scenario, including pilot corrective actions, must be established to determine the loads occurring at the time of failure and immediately after failure.

(i) For static strength substantiation, these loads multiplied by an appropriate factor of safety that is related to the probability of occurrence of the failure are ultimate loads to be considered for design. The factor of safety (F.S.) is defined in Figure 1.

Figure 1
Factor of safety at the time of occurrence

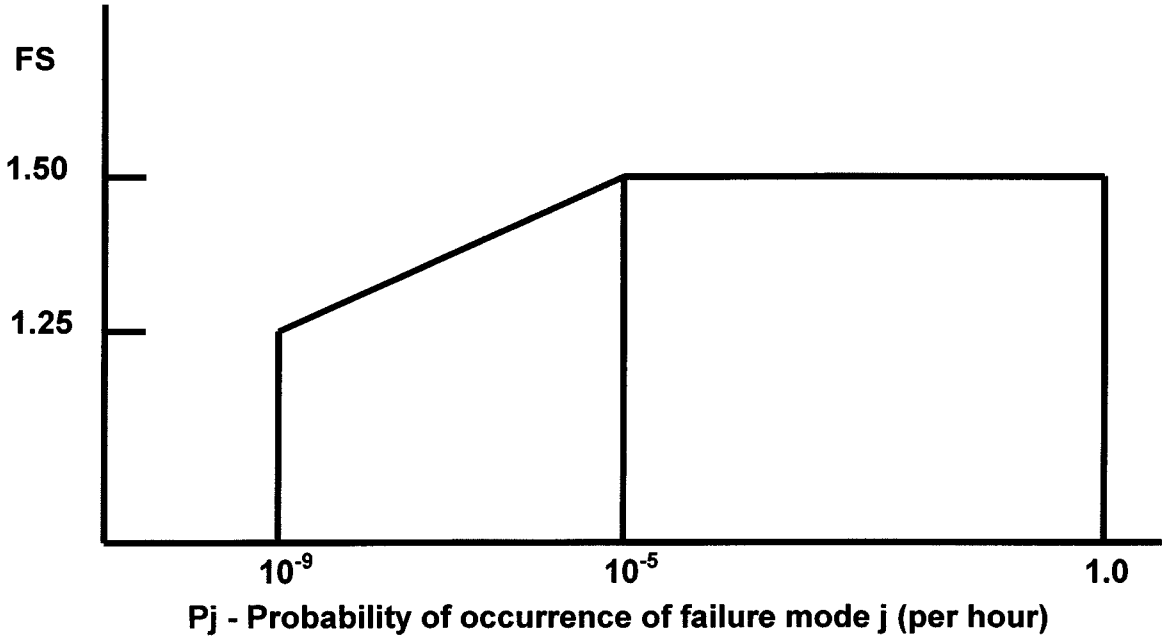

(ii) For residual strength substantiation, the airplane must be able to withstand two thirds of the ultimate loads defined in subparagraph (b)(1)(i).

(iii) Freedom from aeroelastic instability must be shown up to the speeds defined in § 25.629(b)(2). For failure conditions that result in speed increases beyond V_c/M_c, freedom from aeroelastic instability must be shown to increased speeds, so that the margins intended by § 25.629(b)(2) are maintained.

(iv) Failures of the system that result in forced structural vibrations (oscillatory failures) must not produce loads that could result in detrimental deformation of primary structure.

(2) For the continuation of the flight. For the airplane, in the system failed state and considering any appropriate reconfiguration and flight limitations, the following apply:

(i) The loads derived from the following conditions at speeds up to V_c, or the speed limitation prescribed for the remainder of the flight must be determined:

(A) The limit symmetrical maneuvering conditions specified in § 25.331 and in § 25.345.

(B) The limit gust and turbulence conditions specified in § 25.341 and in § 25.345.

(C) The limit rolling conditions specified in § 25.349 and the limit unsymmetrical conditions specified in § 25.367 and § 25.427(b) and (c).

(D) The limit yaw maneuvering conditions specified in § 25.351.

(E) The limit ground loading conditions specified in § 25.473 and § 25.491.

(ii) For static strength substantiation, each part of the structure must be able to withstand the loads in subparagraph (2)(i) of this paragraph multiplied by a factor of safety depending on the probability of being in this failure state. The factor of safety is defined in Figure 2.

Figure 2
Factor of safety for continuation of flight

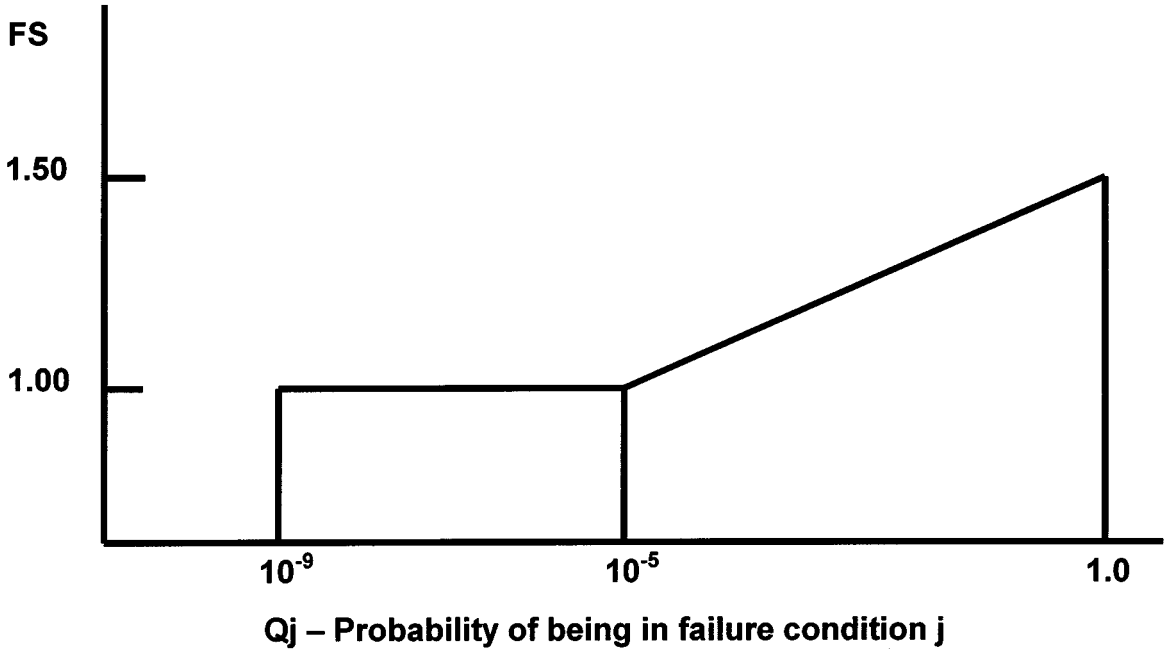

Qj = (Tj)(Pj) where:

Tj = Average time spent in failure condition j (in hours)

Pj = Probability of occurrence of failure mode j (per hour)

Note: If Pj is greater than 10^{-3}, per flight hour then a 1.5 factor of safety must be applied to all limit load conditions specified in Subpart C.

(iii) For residual strength substantiation, the airplane must be able to withstand two thirds of the ultimate loads defined in subparagraph (b)(2)(ii).

(iv) If the loads induced by the failure condition have a significant effect on fatigue or damage tolerance then their effects must be taken into account.

(v) Freedom from aeroelastic instability must be shown up to a speed determined from Figure 3. Flutter clearance speeds V′ and V″ may be based on the speed limitation specified for the remainder of the flight using the margins defined by § 25.629(b).

Figure 3
Clearance speed

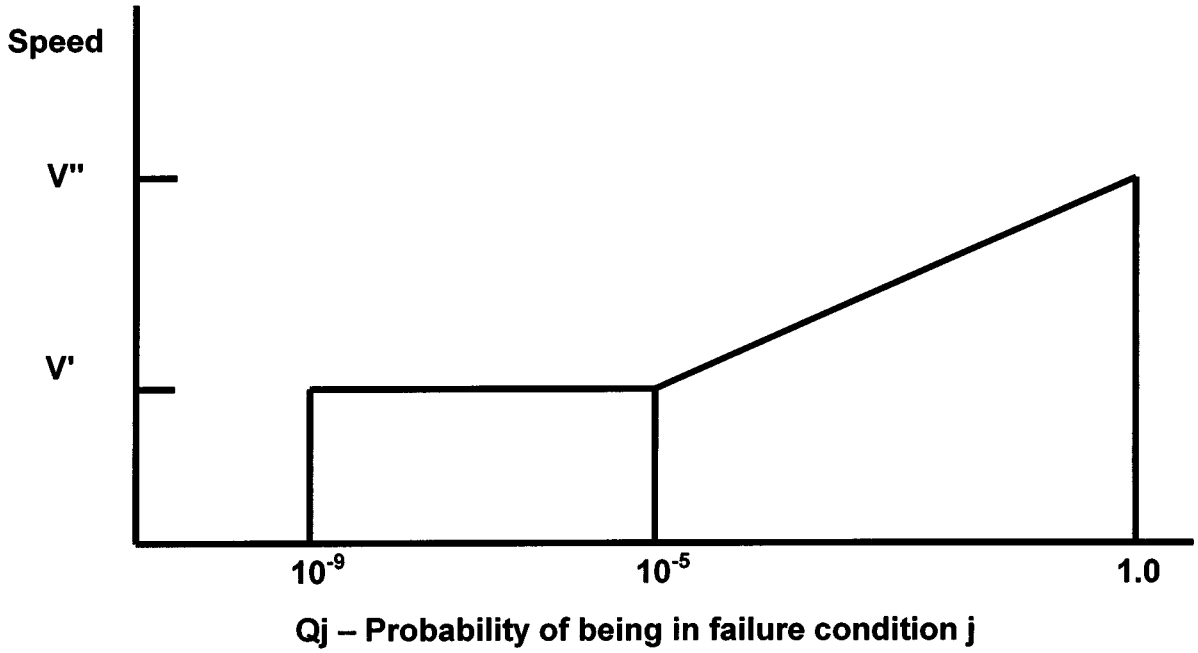

V′ = Clearance speed as defined by § 25.629(b)(2).
V″ = Clearance speed as defined by § 25.629(b)(1).
Qj = (Tj)(Pj) where:
Tj = Average time spent in failure condition j (in hours)
Pj = Probability of occurrence of failure mode j (per hour)

Note: If Pj is greater than 10^{-3} per flight hour, then the flutter clearance speed must not be less than V″.

(vi) Freedom from aeroelastic instability must also be shown up to V′ in Figure 3 above, for any probable system failure condition combined with any damage required or selected for investigation by § 25.571(b).

(3) Consideration of certain failure conditions may be required by other Sections of this part 25 regardless of calculated system reliability. Where analysis shows the probability of these failure conditions to be less than 10^{-9}, criteria other than those specified in this paragraph may be used for structural substantiation to show continued safe flight and landing.

(c) Warning considerations. For system failure detection and warning, the following apply:

(1) The system must be checked for failure conditions, not extremely improbable, that degrade the structural capability below the level required by part 25 or significantly reduce the reliability of the remaining system. The flightcrew must be made aware of these failures before flight. Certain elements of the control system, such as mechanical and hydraulic components, may use special periodic inspections, and electronic components may use daily checks, in lieu of warning systems to achieve the objective of this requirement. These certification maintenance requirements must be limited to components that are not readily detectable by normal warning systems and where service history shows that inspections will provide an adequate level of safety.

(2) The existence of any failure condition, not extremely improbable, during flight that could significantly affect the structural capability of the airplane and for which the associated reduction in airworthiness can be minimized by suitable flight limitations, must be signaled to the flightcrew. For example, failure conditions that result in a factor of safety between the airplane strength and the loads of Subpart C of part 25 below 1.25, or flutter margins below V″, must be signaled to the crew during flight.

(d) Dispatch with known failure conditions. If the airplane is to be dispatched in a known system failure condition that affects structural performance, or affects the reliability of the remaining system to maintain structural performance, then the provisions of this special condition must be met for the dispatched condition and for subsequent failures. Flight limitations and expected operational limitations may be taken into account in establishing Qj as the combined probability of being in the dispatched failure condition and the subsequent failure condition for the safety margins in Figures 2 and 3. These limitations must be such that the probability of being in this combined failure state and then subsequently encountering limit load conditions is extremely improbable. No reduction in these safety margins is allowed if the subsequent system failure rate is greater than 10^{-3} per hour.

Issued in Renton, Washington, on August 30, 2000.

Donald L. Riggin,

Acting Manager, Transport Airplane Directorate, Aircraft Certification Service, ANM–100.

[FR Doc. 00–23174 Filed 9–13–00; 8:45 am]

BILLING CODE 4910–13–P

DEPARTMENT OF TRANSPORTATION

Federal Aviation Administration

14 CFR Part 39

[Docket No. 2000–SW–03–AD; Amendment 39–11893; AD 2000–18–08]

RIN 2120–AA64

Airworthiness Directives; MD Helicopters, Inc. Model MD–900 Helicopters

AGENCY: Federal Aviation Administration, DOT.

ACTION: Final rule.

SUMMARY: This amendment adopts a new airworthiness directive (AD) for MD Helicopters, Inc. (MDHI) Model MD–900 helicopters that requires modifying the non-rotating swashplate assembly and re-identifying it and the swashplate assembly with new part numbers. This AD also requires creating a component history card or equivalent record to track the life of the newly identified non-rotating swashplate assembly and establishing a life limit of 1800 hours time-in-service (TIS). Additionally, this AD requires inspecting and modifying, if necessary, the longitudinal drive link assembly. This AD is prompted by reports of damage to the longitudinal drive link assembly caused by the sharp inner edge of the bushing in the non-rotating swashplate assembly. The actions specified by this AD are intended to prevent damage to the longitudinal drive link, loss of control of the main rotor system, and subsequent loss of control of the helicopter.

DATES: Effective October 19, 2000.

The incorporation by reference of certain publications listed in the regulations is approved by the Director of the Federal Register as of October 19, 2000.

ADDRESSES: The service information referenced in this AD may be obtained from MD Helicopters Inc., Attn: Customer Support Division, 4555 E. McDowell Rd., Mail Stop M615–GO48, Mesa, Arizona 85215–9734, telephone 1–800–388–3378, fax 480–891–6782, or on the web at *www.mdhelicopters.com*. This information may be examined at the FAA, Office of the Regional Counsel, Southwest Region, 2601 Meacham Blvd., Room 663, Fort Worth, Texas; or at the Office of the Federal Register, 800 North Capitol Street, NW., suite 700, Washington, DC.

FOR FURTHER INFORMATION CONTACT: Greg DiLibero, Aviation Safety Engineer, FAA, Los Angeles Aircraft Certification Office, Airframe Branch, 3960 Paramount Blvd., Lakewood, California 90712, telephone (562) 627–5231, fax (562) 627–5210.

SUPPLEMENTARY INFORMATION: A proposal to amend part 39 of the Federal Aviation Regulations (14 CFR part 39) to include an AD for MDHI Model MD–900 helicopters was published in the **Federal Register** on June 6, 2000 (65 FR 35869). That action proposed to require modifying the non-rotating swashplate and re-identifying it and the swashplate assembly with new part numbers. Also proposed were creating or modifying the existing component history card or equivalent record to track the life of the newly identified non-rotating swashplate assembly and establishing a life limit of 1800 hours TIS. In addition, that action proposed inspecting and modifying, if necessary, the longitudinal drive link assembly.

Interested persons have been afforded an opportunity to participate in the making of this amendment. No comments were received on the proposal or the FAA's determination of the cost to the public. The FAA has determined that air safety and the public interest require the adoption of the rule as proposed.

The FAA estimates that 28 helicopters of U.S. registry will be affected by this AD, that it will take approximately 2 work hours per helicopter to accomplish the required actions, and that the average labor rate is $60 per work hour. Required parts will cost approximately $1164 per helicopter. Based on these figures, the total cost impact of the AD on U.S. operators is estimated to be $35,952.

The regulations adopted herein will not have a substantial direct effect on the States, on the relationship between the national Government and the States, or on the distribution of power and responsibilities among the various levels of government. Therefore, it is determined that this final rule does not have federalism implications under Executive Order 13132.

For the reasons discussed above, I certify that this action (1) is not a ''significant regulatory action'' under Executive Order 12866; (2) is not a ''significant rule'' under DOT Regulatory Policies and Procedures (44 FR 11034, February 26, 1979); and (3) will not have a significant economic impact, positive or negative, on a substantial number of small entities under the criteria of the Regulatory Flexibility Act. A final evaluation has been prepared for this action and it is contained in the Rules Docket. A copy of it may be obtained from the Rules Docket at the location provided under the caption **ADDRESSES**.

List of Subjects in 14 CFR Part 39

Air transportation, Aircraft, Aviation safety, Incorporation by reference, Safety.

Adoption of the Amendment

Accordingly, pursuant to the authority delegated to me by the Administrator, the Federal Aviation Administration amends part 39 of the Federal Aviation Regulations (14 CFR part 39) as follows:

PART 39—AIRWORTHINESS DIRECTIVES

1. The authority citation for part 39 continues to read as follows:

Authority: 49 U.S.C. 106(g), 40113, 44701.

§ 39.13 [Amended]

2. Section 39.13 is amended by adding a new airworthiness directive to read as follows:

2000–18–08 MD Helicopters Inc.: Amendment 39–11893. Docket No. 2000–SW–03–AD.

Applicability: Model MD–900 helicopters, serial numbers 0008 through 0068, certificated in any category.

Note 1: This AD applies to each helicopter identified in the preceding applicability provision, regardless of whether it has been otherwise modified, altered, or repaired in the area subject to the requirements of this AD. For helicopters that have been modified, altered, or repaired so that the performance of the requirements of this AD is affected, the owner/operator must request approval for an alternative method of compliance in accordance with paragraph (c) of this AD. The request should include an assessment of the effect of the modification, alteration, or repair on the unsafe condition addressed by this AD; and if the unsafe condition has not been eliminated, the request should include specific proposed actions to address it.

Compliance: Required as indicated, unless accomplished previously.

To prevent damage to the longitudinal drive link, loss of control of the main rotor system, and subsequent loss of control of the helicopter, accomplish the following:

(a) Within the next 100 hours time-in-service (TIS) or 3 months, whichever occurs first:

(1) Modify the non-rotating swashplate assembly, part number (P/N) 900C2010192–111, in accordance with the Accomplishment Instructions, paragraphs 2.A.(1). and 2.A.(2)., of MD Helicopters (MDHI) Service Bulletin SB900–071, dated January 10, 2000 (SB).

(2) Re-identify the swashplate assembly, P/N 900C1010004–125, as P/N 900C1010004–127, and the non-rotating swashplate assembly, P/N 900C2010192–111, as P/N 900C2010192–113 using contrasting color permanent ink. When the ink is dry, apply varnish over the P/N.

(3) Create or modify the existing component history card or equivalent record to track the life of the non-rotating

swashplate assembly, P/N 900C2010192–113. Include the hours TIS accumulated when P/N 900C2010192–113 was identified as P/N 900C2010192–111.

(4) Visually and dye-penetrant inspect the longitudinal drive link assembly, P/N 900C2010212–101, for gouging and cracking in accordance with the Accomplishment Instructions, paragraph 2.B.(1). and 2.B.(2). of the SB except that returning scrap parts to MDHI is not required by this AD.

(i) If a crack is found, before further flight, replace the longitudinal drive link assembly, P/N 900C2010212–101, with an airworthy longitudinal drive link assembly.

(ii) If gouging is found, modify the longitudinal drive link assembly, P/N 900C2010212–101, in accordance with the Accomplishment Instructions, paragraph 2.B.(3). of the SB.

(b) This AD revises the Airworthiness Limitations

Section of the applicable maintenance manual by establishing a retirement life of 1800 hours TIS for the non-rotating swashplate assembly, P/N 900C2010192–113.

(c) An alternative method of compliance or adjustment of the compliance time that provides an acceptable level of safety may be used if approved by the Manager, Los Angeles Aircraft Certification Office. Operators shall submit their requests through an FAA Principal Maintenance Inspector, who may concur or comment and then send it to the Manager, Los Angeles Aircraft Certification Office.

Note 2: Information concerning the existence of approved alternative methods of compliance with this AD, if any, may be obtained from the Los Angeles Aircraft Certification Office.

(d) Special flight permits may be issued in accordance with §§ 21.197 and 21.199 of the Federal Aviation Regulations (14 CFR 21.197 and 21.199) to operate the helicopter to a location where the requirements of this AD can be accomplished.

(e) The modifications and inspections shall be done in accordance with the Accomplishment Instructions, paragraphs 2.A.(1) and 2.A.(2); 2.B.(1), and 2.B.(2), and 2.B.(3) of MD Helicopters Service Bulletin SB900–071, dated January 10, 2000. This incorporation by reference was approved by the Director of the Federal Register in accordance with 5 U.S.C. 552(a) and 1 CFR part 51. Copies may be obtained from MD Helicopters Inc., Attn: Customer Support Division, 4555 E. McDowell Rd., Mail Stop M615–GO48, Mesa, Arizona 85215–9734, telephone 1–800–388–3378, fax 480–891–6782, or on the web at *www.mdhelicopters.com*. Copies may be inspected at the FAA, Office of the Regional Counsel, Southwest Region, 2601 Meacham Blvd., Room 663, Fort Worth, Texas; or at the Office of the Federal Register, 800 North Capitol Street, NW., suite 700, Washington, DC.

(f) This amendment becomes effective on October 19, 2000.

Issued in Fort Worth, Texas, on September 1, 2000.

Henry A. Armstrong,

Manager, Rotorcraft Directorate, Aircraft Certification Service.

[FR Doc. 00–23206 Filed 9–13–00; 8:45 am]

BILLING CODE 4910–13–P

DEPARTMENT OF TRANSPORTATION

Federal Aviation Administration

14 CFR Part 39

[Docket No. 2000–NM–287–AD; Amendment 39–11896; AD 2000–18–11]

RIN 2120–AA64

Airworthiness Directives; Israel Aircraft Industries, Ltd., Model 1125 Westwind Astra Series Airplanes

AGENCY: Federal Aviation Administration, DOT.

ACTION: Final rule; request for comments.

SUMMARY: This amendment adopts a new airworthiness directive (AD) that is applicable to certain Israel Aircraft Industries, Ltd., Model 1125 Westwind Astra series airplanes. This action requires revising the Airplane Flight Manual to provide the flight crew with operational guidance under certain failure conditions and a limitation not to engage the long-range navigation system during takeoff, approach, or landing. This action is necessary to prevent the loss of primary attitude and directional gyros, which relate position information to the flight crew. This action is intended to address the identified unsafe condition.

DATES: Effective September 29, 2000.

The incorporation by reference of certain publications listed in the regulations is approved by the Director of the **Federal Register** as of September 29, 2000.

Comments for inclusion in the Rules Docket must be received on or before October 16, 2000.

ADDRESSES: Submit comments in triplicate to the Federal Aviation Administration (FAA), Transport Airplane Directorate, ANM–114, Attention: Rules Docket No. 2000–NM–287–AD, 1601 Lind Avenue, SW., Renton, Washington 98055–4056. Comments may be inspected at this location between 9 a.m. and 3 p.m., Monday through Friday, except Federal holidays. Comments may be submitted via fax to (425) 227–1232. Comments may also be sent via the Internet using the following address: 9-anm-iarcomment@faa.gov. Comments sent via fax or the Internet must contain ''Docket No. 2000–NM–287–AD'' in the subject line and need not be submitted in triplicate. Comments sent via the Internet as attached electronic files must be formatted in Microsoft Word 97 for Windows or ASCII text.

The service information referenced in this AD may be obtained from Galaxy Aerospace Corporation, One Galaxy Way, Fort Worth Alliance Airport, Fort Worth, Texas 76177. This information may be examined at the FAA, Transport Airplane Directorate, 1601 Lind Avenue, SW., Renton, Washington; or at the Office of the Federal Register, 800 North Capitol Street, NW., suite 700, Washington, DC.

FOR FURTHER INFORMATION CONTACT: Norman B. Martenson, Manager, International Branch, ANM–116, FAA, Transport Airplane Directorate, 1601 Lind Avenue, SW., Renton, Washington 98055–4056; telephone (425) 227–2110; fax (425) 227–1149.

SUPPLEMENTARY INFORMATION: The Civil Aviation Administration of Israel (CAAI), which is the airworthiness authority for Israel, notified the FAA that an unsafe condition may exist on certain Israel Aircraft Industries, Ltd., Model 1125 Westwind Astra series airplanes. The CAAI reported a recent incident in which failure of a single alternating current (AC) inverter resulted in the simultaneous in-flight failure of all primary attitude and directional gyros on board.

On these airplanes, AC power to the whole avionics system is supplied by the left inverter when the long-range navigation/flight management system is selected for navigation. When this inverter fails, all screens of the electronic flight instrument system (EFIS) could lose power. In addition, internal gyro fuses could burn out. The system to detect AC power failure is activated when the voltage drops below 65 volts. There are several inverter failure modes that could cause the voltage to drop to slightly less than 100 volts; in that case, the avionics systems could fail, but no AC power failure would be announced. The CAAI advises that proper and timely corrective action (transferring all the loads to the alternate inverter) would alleviate the problem.

In the subject incident, a single inverter failed and all EFIS screens temporarily lost power. Both primary gyros failed due to internal fuse burnout caused by low voltage. The flight crew was left with use of only the standby attitude indicator and magnetic compass to control the airplane. AC power was

eventually restored, except for gyro information.

Unless proper and timely corrective action is taken, failure of the left inverter could result in the loss of power to the EFIS screens and internal gyros during takeoff, approach, or landing, and consequent loss of primary position information to the flight crew.

Explanation of Relevant Service Information

Israel Aircraft Industries, Ltd. has issued Astra Airplane Flight Manual (AFM) Temporary Revision No. 9, dated May 21, 2000, which provides the flight crew with operational guidance under certain failure conditions and a limitation not to engage the long-range navigation system during takeoff, approach, or landing. The CAAI classified this temporary revision as mandatory and issued Israeli airworthiness directive 34–00–07–04, dated July 10, 2000, in order to ensure the continued airworthiness of these airplanes in Israel.

FAA's Conclusions

This airplane model is manufactured in Israel and is type certificated for operation in the United States under the provisions of § 21.29 of the Federal Aviation Regulations (14 CFR 21.29) and the applicable bilateral airworthiness agreement. Pursuant to this bilateral airworthiness agreement, the CAAI has kept the FAA informed of the situation described above. The FAA has examined the findings of the CAAI, reviewed all available information, and determined that AD action is necessary for products of this type design that are certificated for operation in the United States.

Explanation of Requirements of Rule

Since an unsafe condition has been identified that is likely to exist or develop on other airplanes of the same type design registered in the United States, this AD is being issued to prevent loss of primary attitude and directional gyros, which relate position information to the flight crew. This AD requires revising the Limitations and Abnormal Procedures Sections of the FAA-approved AFM to provide operational guidance for the flight crew under certain failure conditions and a limitation not to engage the long-range navigation system during takeoff, approach, or landing.

Interim Action

This is considered to be interim action. The manufacturer has advised that it may develop a modification that will positively address the unsafe condition addressed by this AD. Once this modification is developed, approved, and available, the FAA may consider additional rulemaking.

Difference Between AD and Israeli Airworthiness Directive

This AD requires that the AFM be revised within 10 days. The parallel Israeli airworthiness directive recommends that the AFM be revised within 1 month. In developing an appropriate compliance time for this AD, the FAA considered not only the CAAI's recommendation, but the degree of urgency associated with addressing the subject unsafe condition, and the average utilization of the affected fleet. In light of these factors, the FAA finds a 10-day compliance time for initiating the required actions to be warranted, in that it represents an appropriate interval of time allowable for affected airplanes to continue to operate without compromising safety.

Determination of Rule's Effective Date

Since a situation exists that requires the immediate adoption of this regulation, it is found that notice and opportunity for prior public comment hereon are impracticable, and that good cause exists for making this amendment effective in less than 30 days.

Comments Invited

Although this action is in the form of a final rule that involves requirements affecting flight safety and, thus, was not preceded by notice and an opportunity for public comment, comments are invited on this rule. Interested persons are invited to comment on this rule by submitting such written data, views, or arguments as they may desire. Communications shall identify the Rules Docket number and be submitted in triplicate to the address specified under the caption **ADDRESSES.** All communications received on or before the closing date for comments will be considered, and this rule may be amended in light of the comments received. Factual information that supports the commenter's ideas and suggestions is extremely helpful in evaluating the effectiveness of the AD action and determining whether additional rulemaking action would be needed.

Submit comments using the following format:

- Organize comments issue-by-issue. For example, discuss a request to change the compliance time and a request to change the service bulletin reference as two separate issues.
- For each issue, state what specific change to the AD is being requested.
- Include justification (*e.g.*, reasons or data) for each request.

Comments are specifically invited on the overall regulatory, economic, environmental, and energy aspects of the rule that might suggest a need to modify the rule. All comments submitted will be available, both before and after the closing date for comments, in the Rules Docket for examination by interested persons. A report that summarizes each FAA-public contact concerned with the substance of this AD will be filed in the Rules Docket.

Commenters wishing the FAA to acknowledge receipt of their comments submitted in response to this rule must submit a self-addressed, stamped postcard on which the following statement is made: ''Comments to Docket Number 2000–NM–287–AD.'' The postcard will be date-stamped and returned to the commenter.

Regulatory Impact

The regulations adopted herein will not have a substantial direct effect on the States, on the relationship between the national Government and the States, or on the distribution of power and responsibilities among the various levels of government. Therefore, it is determined that this final rule does not have federalism implications under Executive Order 13132.

The FAA has determined that this regulation is an emergency regulation that must be issued immediately to correct an unsafe condition in aircraft, and that it is not a ''significant regulatory action'' under Executive Order 12866. It has been determined further that this action involves an emergency regulation under DOT Regulatory Policies and Procedures (44 FR 11034, February 26, 1979). If it is determined that this emergency regulation otherwise would be significant under DOT Regulatory Policies and Procedures, a final regulatory evaluation will be prepared and placed in the Rules Docket. A copy of it, if filed, may be obtained from the Rules Docket at the location provided under the caption **ADDRESSES.**

List of Subjects in 14 CFR Part 39

Air transportation, Aircraft, Aviation safety, Incorporation by reference, Safety.

Adoption of the Amendment

Accordingly, pursuant to the authority delegated to me by the Administrator, the Federal Aviation Administration amends part 39 of the Federal Aviation Regulations (14 CFR part 39) as follows:

PART 39—AIRWORTHINESS DIRECTIVES

1. The authority citation for part 39 continues to read as follows:

Authority: 49 U.S.C. 106(g), 40113, 44701.

§ 39.13 [Amended]

2. Section 39.13 is amended by adding the following new airworthiness directive:

2000–18–11 Israel Aircraft Industries, LTD.: Amendment 39–11896. Docket 2000–NM–287–AD.

Applicability: Model 1125 Westwind Astra series airplanes, certificated in any category; serial numbers 004 through 029 inclusive and 031 through 041 inclusive.

Compliance: Required as indicated, unless accomplished previously.

To prevent the loss of primary attitude and directional gyros, which relate position information to the flight crew, accomplish the following:

AFM Revision

(a) Within 10 days after the effective date of this AD, revise the Limitations and Abnormal Procedures Sections of the Israel Aircraft Industries, Ltd. Astra Airplane Flight Manual (AFM) by inserting a copy of Temporary Revision No. 9, dated May 21, 2000, into the AFM.

Note 1: When the temporary revision required by paragraph (a) of this AD has been incorporated into the general revisions of the AFM, the general revisions may be inserted into the AFM, provided that the information contained in the general revisions is identical to that specified in the temporary revision.

Alternative Methods of Compliance

(b) An alternative method of compliance or adjustment of the compliance time that provides an acceptable level of safety may be used if approved by the Manager, International Branch, ANM–116, FAA. Operators shall submit their requests through an appropriate FAA Principal Operations Inspector, who may add comments and then send it to the Manager, International Branch, ANM–116.

Note 2: Information concerning the existence of approved alternative methods of compliance with this AD, if any, may be obtained from the International Branch, ANM–116.

Special Flight Permits

(c) Special flight permits may be issued in accordance with §§ 21.197 and 21.199 of the Federal Aviation Regulations (14 CFR 21.197 and 21.199) to operate the airplane to a location where the requirements of this AD can be accomplished.

Incorporation by Reference

(d) The actions shall be done in accordance with Israel Aircraft Industries, Ltd. Astra Airplane Flight Manual Temporary Revision No. 9, dated May 21, 2000. This incorporation by reference was approved by the Director of the **Federal Register** in accordance with 5 U.S.C. 552(a) and 1 CFR part 51. Copies may be obtained from Galaxy Aerospace Corporation, One Galaxy Way, Fort Worth Alliance Airport, Fort Worth, Texas 76177. Copies may be inspected at the FAA, Transport Airplane Directorate, 1601 Lind Avenue, SW., Renton, Washington; or at the Office of the Federal Register, 800 North Capitol Street, NW., suite 700, Washington, DC.

Note 3: The subject of this AD is addressed in Israeli airworthiness directive 34–00–07–04, dated July 10, 2000.

(e) This amendment becomes effective on September 29, 2000.

Issued in Renton, Washington, on September 5, 2000.

Donald L. Riggin,

Acting Manager, Transport Airplane Directorate, Aircraft Certification Service.

[FR Doc. 00–23205 Filed 9–13–00; 8:45 am]

BILLING CODE 4910–13–P

DEPARTMENT OF TRANSPORTATION

Federal Aviation Administration

14 CFR Part 39

[Docket No. 99–SW–68–AD; Amendment 39–11899; AD 2000–18–13]

RIN 2120–AA64

Airworthiness Directives; Eurocopter Canada Ltd. Model BO 105 LS A–3 Helicopters

AGENCY: Federal Aviation Administration, DOT.

ACTION: Final rule.

SUMMARY: This amendment supersedes an existing airworthiness directive (AD) that applies to Eurocopter Canada Ltd. Model BO 105 LS A–3 helicopters. That AD currently requires, before further flight, creating a component log card or equivalent record and determining the calendar age and number of flights on each tension-torsion (TT) strap, and inspecting and removing, as necessary, certain unairworthy TT straps. This amendment establishes a life limit for certain main rotor TT straps. This amendment is prompted by an accident in which a main rotor blade (blade) separated from a Eurocopter Deutschland GMBH (ECD) Model MBB–BK 117 helicopter due to fatigue failure of a TT strap. The same part-numbered TT strap is used on the Model BO 105 LS A–3 helicopters. The actions specified by this AD are intended to prevent fatigue failure of a TT strap, loss of a blade, and subsequent loss of control of the helicopter.

EFFECTIVE DATE: October 19, 2000.

FOR FURTHER INFORMATION CONTACT: Charles Harrison, Aviation Safety Engineer, FAA, Rotorcraft Directorate, Rotorcraft Standards Staff, Fort Worth, Texas 76193–0110, telephone (817) 222–5128, fax (817) 222–5961.

SUPPLEMENTARY INFORMATION: A proposal to amend part 39 of the Federal Aviation Regulations (14 CFR part 39) by superseding AD 99–20–13, Amendment 39–11371 (64 FR 56156, October 18, 1999), which applies to Eurocopter Canada Ltd. Model BO 105 LS A–3 helicopters, was published in the Federal Register on June 19, 2000 (65 FR 37924). That action proposed to require establishing a life limit for the TT straps of 120 months or 25,000 flights, whichever occurs first.

Interested persons have been afforded an opportunity to participate in the making of this amendment. No comments were received on the proposal or the FAA's determination of the cost to the public. The FAA has determined that air safety and the public interest require the adoption of the rule as proposed.

The FAA estimates that 20 helicopters of U.S. registry will be affected by this AD, that it will take approximately 16 work hours per helicopter to accomplish the required actions, and that the average labor rate is $60 per work hour. Required parts will cost approximately $10,400 per helicopter. Based on these figures, the total cost impact of the AD on U.S. operators is estimated to be $227,200.

The regulations adopted herein will not have a substantial direct effect on the States, on the relationship between the national Government and the States, or on the distribution of power and responsibilities among the various levels of government. Therefore, it is determined that this final rule does not have federalism implications under Executive Order 13132.

For the reasons discussed above, I certify that this action (1) is not a ''significant regulatory action'' under Executive Order 12866; (2) is not a ''significant rule'' under DOT Regulatory Policies and Procedures (44 FR 11034, February 26, 1979); and (3) will not have a significant economic impact, positive or negative, on a substantial number of small entities under the criteria of the Regulatory Flexibility Act. A final evaluation has been prepared for this action and it is contained in the Rules Docket. A copy of it may be obtained from the Rules Docket at the FAA, Office of the Regional Counsel, Southwest Region, 2601 Meacham Blvd., Room 663, Fort Worth, Texas.

List of Subjects in 14 CFR Part 39

Air transportation, Aircraft, Aviation safety, Safety.

Adoption of the Amendment

Accordingly, pursuant to the authority delegated to me by the Administrator, the Federal Aviation Administration amends part 39 of the Federal Aviation Regulations (14 CFR part 39) as follows:

PART 39—AIRWORTHINESS DIRECTIVES

1. The authority citation for part 39 continues to read as follows:

Authority: 49 U.S.C. 106(g), 40113, 44701.

§ 39.13 [Amended]

2. Section 39.13 is amended by removing Amendment 39–11371 (64 FR 56156, October 18, 1999), and by adding a new airworthiness directive (AD), Amendment 39–11899, to read as follows:

2000–18–13 Eurocopter Canada Ltd.: Amendment 39–11899. Docket No. 99–SW–68–AD. Supersedes AD 99–20–13, Amendment 39–11371, Docket No. 99–SW–56–AD.

Applicability: Model BO 105 LS A–3 helicopters, with part number (P/N) 2604067 (Bendix) or J17322–1 (Lord) rotor tension torsion (TT) strap, installed, certificated in any category.

Note 1: This AD applies to each helicopter identified in the preceding applicability provision, regardless of whether it has been otherwise modified, altered, or repaired in the area subject to the requirements of this AD. For helicopters that have been modified, altered, or repaired so that the performance of the requirements of this AD is affected, the owner/operator must request approval for an alternative method of compliance in accordance with paragraph (d) of this AD. The request should include an assessment of the effect of the modification, alteration, or repair on the unsafe condition addressed by this AD; and if the unsafe condition has not been eliminated, the request should include specific proposed actions to address it.

Compliance: Required as indicated, unless accomplished previously.

To prevent fatigue failure of a TT strap, loss of a main rotor blade (blade), and subsequent loss of control of the helicopter, accomplish the following:

(a) Before further flight,

(1) Create a component log card or equivalent record for each TT strap.

(2) Review the history of each helicopter and TT strap. Determine the age since initial installation on any helicopter (age) and the number of flights on each TT strap. Enter both the age and the number of flights for each TT strap on the component log card or equivalent record. When the number of flights is unknown, multiply the number of hours time-in-service (TIS) by 5 to determine the number of flights. If a TT strap has been previously used at any time on Model BO–105LS A–3 ''SUPER LIFTER'', BO–105 CB–5, BO–105 CBS–5, BO–105 DBS–5, or any MBB–BK 117 series helicopter, multiply the total number of flights accumulated on those other models by a factor of 1.6 and then add that result to the number of flights accumulated on the helicopters affected by this AD.

(3) Remove any TT strap from service if the total hours TIS or number of flights and age cannot be determined.

(b) Remove any TT strap, P/N 2604067 or J17322–1, that has been in service 120 months since initial installation on any helicopter or accumulated 40,000 flights (a flight is a takeoff and a landing). Replace the TT strap with an airworthy TT strap.

(c) This AD revises the Airworthiness Limitations Section of the maintenance manual by establishing a life limit for the TT strap, P/N 2604067 and J17322–1, of 120 months or 40,000 flights, whichever occurs first.

(d) An alternative method of compliance or adjustment of the compliance time that provides an acceptable level of safety may be used if approved by the Manager, Regulations Group, Rotorcraft Directorate, FAA. Operators shall submit their requests through an FAA Principal Maintenance Inspector, who may concur or comment and then send it to the Manager, Regulations Group.

Note 2: Information concerning the existence of approved alternative methods of compliance with this AD, if any, may be obtained from the Regulations Group.

(e) Special flight permits may be issued in accordance with §§ 21.197 and 21.199 of the Federal Aviation Regulations (14 CFR 21.197 and 21.199) to operate the helicopter to a location where the requirements of this AD can be accomplished.

(f) This amendment becomes effective on October 19, 2000.

Note 3: The subject of this AD is addressed in Transport Canada Civil Aviation, Canada, AD CF–99–24R1, dated September 22, 1999.

Issued in Fort Worth, Texas, on September 5, 2000.

Henry A. Armstrong,

Manager, Rotorcraft Directorate, Aircraft Certification Service.

[FR Doc. 00–23582 Filed 9–13–00; 8:45 am]

BILLING CODE 4910–13–P

DEPARTMENT OF TRANSPORTATION

Federal Aviation Administration

14 CFR Part 39

[Docket No. 99–SW–81–AD; Amendment 39–11901; AD 2000–18–14]

RIN 2120–AA64

Airworthiness Directives; Sikorsky Aircraft-Manufactured Model CH–54A Helicopters

AGENCY: Federal Aviation Administration, DOT.

ACTION: Final rule.

SUMMARY: This amendment supersedes an existing airworthiness directive (AD) that applies to Sikorsky Aircraft-manufactured Model CH–54A helicopters. That AD currently requires initial and recurring inspections and rework or replacement, if necessary, of the second stage lower planetary plate (plate). This AD requires the same actions as the existing AD but would add two additional type certificate (TC) holders to the applicability of the AD and change one TC holder who has transferred ownership of the affected helicopters since the issuance of the existing AD. This amendment is prompted by the discovery that the applicability section of the existing AD is incomplete. The actions specified by this AD are intended to prevent failure of the plate due to fatigue cracking, which could result in failure of the main gearbox, failure of the drive system, and subsequent loss of control of the helicopter.

EFFECTIVE DATE: October 19, 2000.

FOR FURTHER INFORMATION CONTACT: Uday Garadi, Aviation Safety Engineer, FAA, Rotorcraft Directorate, Rotorcraft Standards Staff, Fort Worth, Texas 76193–0110, telephone (817) 222–5123, fax (817) 222–5961.

SUPPLEMENTARY INFORMATION: A proposal to amend part 39 of the Federal Aviation Regulations (14 CFR part 39) by superseding AD 99–07–16, Amendment 39–11102 (64 FR 15669, April 1, 1999), which applies to Sikorsky Aircraft-manufactured Model CH–54A helicopters, was published in the **Federal Register** on April 20, 2000 (65 FR 21159). That action proposed to require initial and recurring inspections and rework or replacement, if necessary, of the plate.

Interested persons have been afforded an opportunity to participate in the making of this amendment. Due consideration has been given to the comments received.

The sole commenter indicates that the cost figures utilized in the economic analysis are incorrect. The FAA agrees; therefore, the approximate cost of procuring a new plate assembly is revised to $37,333. The total cost impact of the AD is estimated to be $507,360 to replace the plate assemblies in the entire fleet, if necessary.

After careful review of the available data, including the comments noted above, the FAA has determined that air safety and the public interest require the adoption of the rule as proposed except for the change in the economic analysis.

The FAA estimates that 12 helicopters of U.S. registry will be affected by this AD. It will take approximately 8 work hours per helicopter to accomplish the inspection; 24 work hours per

helicopter to remove and rework the assembly; and 56 work hours to remove and replace the assembly from each helicopter, if necessary. Required parts, if an assembly needs to be replaced, will cost approximately $37,333. Based on these figures, the total cost impact of the AD on U.S. operators is estimated to be $511,356 ($42,613 per helicopter, assuming inspecting the plate once, reworking the assembly once, and replacing the assembly).

The regulations adopted herein will not have a substantial direct effect on the States, on the relationship between the national Government and the States, or on the distribution of power and responsibilities among the various levels of government. Therefore, it is determined that this final rule does not have federalism implications under Executive Order 13132.

For the reasons discussed above, I certify that this action (1) is not a ''significant regulatory action'' under Executive Order 12866; (2) is not a ''significant rule'' under DOT Regulatory Policies and Procedures (44 FR 11034, February 26, 1979); and (3) will not have a significant economic impact, positive or negative, on a substantial number of small entities under the criteria of the Regulatory Flexibility Act. A final evaluation has been prepared for this action and it is contained in the Rules Docket. A copy of it may be obtained from the Rules Docket at the FAA, Office of the Regional Counsel, Southwest Region, 2601 Meacham Blvd., Room 663, Fort Worth, Texas.

List of Subjects in 14 CFR Part 39

Air transportation, Aircraft, Aviation safety, Safety.

Adoption of the Amendment

Accordingly, pursuant to the authority delegated to me by the Administrator, the Federal Aviation Administration amends part 39 of the Federal Aviation Regulations (14 CFR part 39) as follows:

PART 39—AIRWORTHINESS DIRECTIVES

1. The authority citation for part 39 continues to read as follows:

Authority: 49 U.S.C. 106(g), 40113, 44701.

§ 39.13 [Amended]

2. Section 39.13 is amended by removing Amendment 39–11102 (64 FR 15669, April 1, 1999), and by adding a new airworthiness directive (AD), Amendment 39–11901, to read as follows:

2000–18–14 Siller Helicopters; Aviation International Rotors, Inc. (AIR, INC); Columbia Helicopters, Inc.; Chet Raspberry, Inc. (CRI); Silver Bay Logging, Inc.: Amendment 39–11901. Docket No. 99–SW–81–AD. Supersedes AD 99–07–16, Amendment 39–11102, Docket No. 97–SW–60–AD.

Applicability: Model CH–54A helicopters with lower planetary plate, part number (P/N) 6435–20229–102, installed, certificated in any category.

Note 1: This AD applies to each helicopter identified in the preceding applicability provision, regardless of whether it has been otherwise modified, altered, or repaired in the area subject to the requirements of this AD. For helicopters that have been modified, altered, or repaired so that the performance of the requirements of this AD is affected, the owner/operator must request approval for an alternative method of compliance in accordance with paragraph (d) of this AD. The request should include an assessment of the effect of the modification, alteration, or repair on the unsafe condition addressed by this AD; and if the unsafe condition has not been eliminated, the request should include specific proposed actions to address it.

Compliance: Required as indicated, unless accomplished previously.

To prevent failure of the second stage lower planetary plate (plate), P/N 6435–20229–102, due to fatigue cracking, which could lead to failure of the main gearbox, failure of the drive system, and subsequent loss of control of the helicopter, accomplish the following:

(a) On or before accumulating 1,300 hours time-in-service (TIS), conduct a fluorescent magnetic particle inspection of the plate, P/N 6435–20229–102, in the circumferential and longitudinal directions using the wet continuous method. Pay particular attention to the area around the 9 lightening holes.

(1) If any crack is discovered, replace the plate with an airworthy plate prior to further flight.

(2) If no crack is discovered, rework the plate as follows:

(i) Locate the center of each 1.750 inch-diameter lightening hole and machine holes 0.015 to 0.020 oversize on a side (0.030 to 0.040 diameter oversize). Machined surface roughness must not exceed 63 microinches AA rating (see Figure 1).

(ii) Radius each hole 0.030 to 0.050 inches on each edge as shown in Figure 1.

(iii) Mask the top and bottom surfaces of the plate to expose 3.20 inch minimum width circumferential band as shown in Figure 1.

(iv) Vapor blast or bead exposed surfaces to remove protective finish. Use 220 aluminum oxide grit at a pressure of 80 to 90 pounds per square inch.

(v) Shot peen exposed surfaces and inside and edges of lightening holes to 0.008—0.012A intensity. Use cast steel shot, size 170; 200 percent coverage is required. Use the tracer dye inspection method to ensure the required coverage. Also, visually inspect the shot peened surfaces for correct shot peen coverage. Inspect the intensity of the shot by performing an Almen strip height measurement.

(vi) Clean reworked surfaces using acetone. Touch up the reworked areas using Presto Black or an equivalent touchup solution. Ensure that the touchup solution is at a temperature between 70° F to 120° F during use. Keep the reworked surfaces wet with touchup solution for 3 minutes to obtain a uniform dark color. Rinse and dry the reworked areas.

(vii) Polish the reworked surfaces with a grade 00 or finer steel wool and polish with a soft cloth. Coat the reworked surfaces with preservative oil.

(viii) Identify the reworked plate by adding ''TS–107'' after the part number using a low-stress depth-controlled impression-stamp with a full fillet depth of not more than 0.003 inch (see Figure 1).

BILLING CODE 4910–13–P

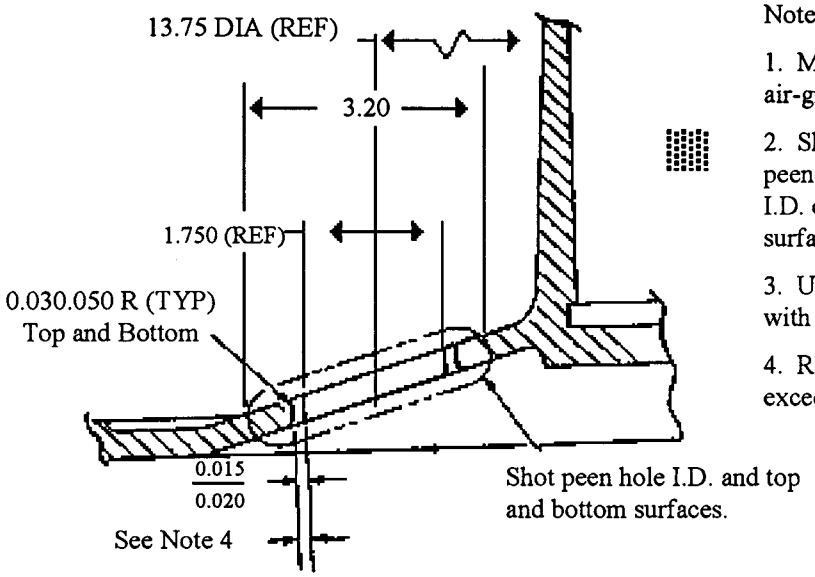

Notes:

1. Mask top and bottom areas to protect from liquid air-grit and shot peen.

2. Shaded area to be liquid air-grit blasted and shot peened includes plate top and bottom surfaces and I.D. of all lightening holes. Feather shot peened surface edges.

3. Use low-stress depth controlled impression-stamp with full fillet depth of no more than 0.003 inch.

4. Reworked machined surface roughness shall not exceed 63 microinches AA rating.

Section B-B

(Typical Nine Places)

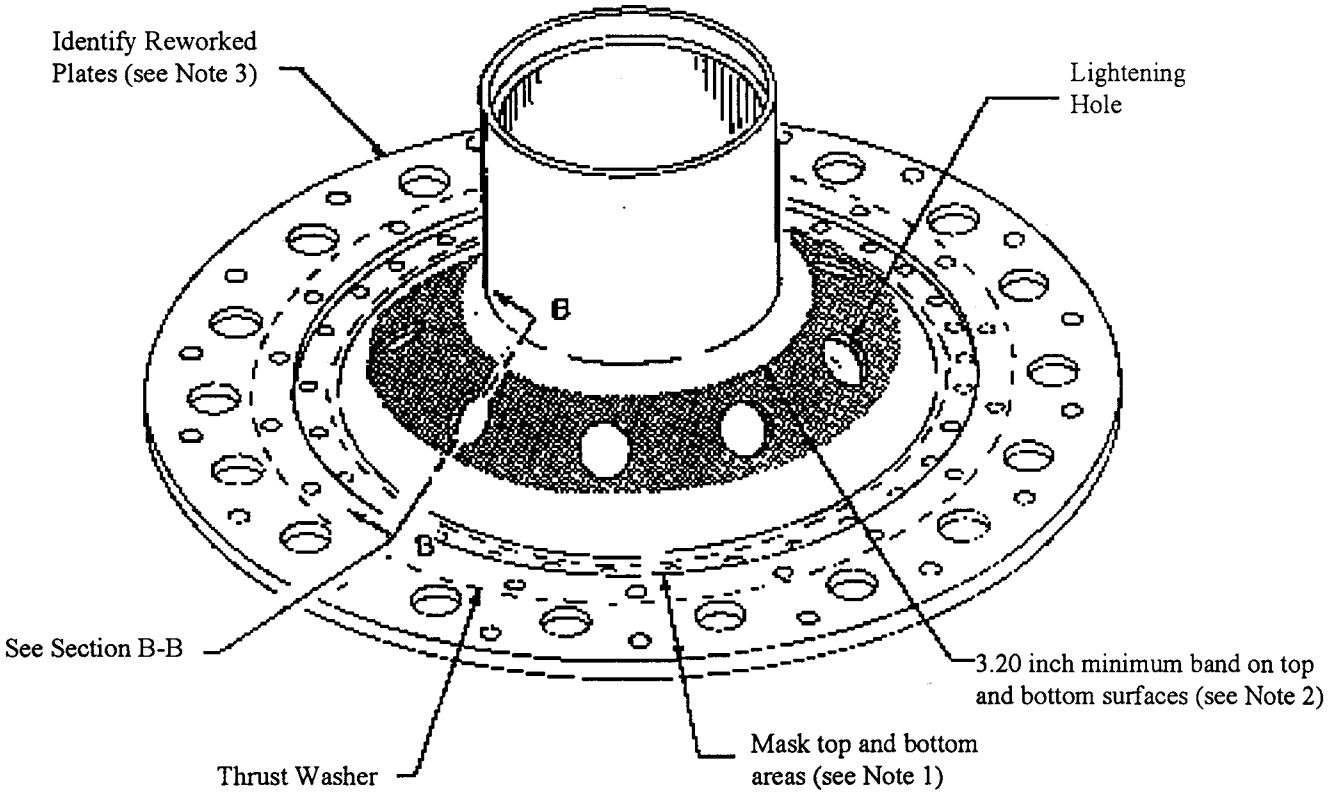

Rework of Second Stage
Lower Planetary Plate (6435-20229-102)
Figure 1

(b) For any plate, P/N 6435–20229–102, that has been reworked and identified with ''TS–107,'' on or before the accumulation of 1,500 hours TIS and thereafter at intervals not to exceed 70 hours TIS, accomplish the following:

(1) Inspect the plate for a crack in the area around all nine lightening holes using a Borescope or equivalent inspection method (see Figure 2).

(2) If a crack is found, replace the plate with an airworthy plate prior to further flight.

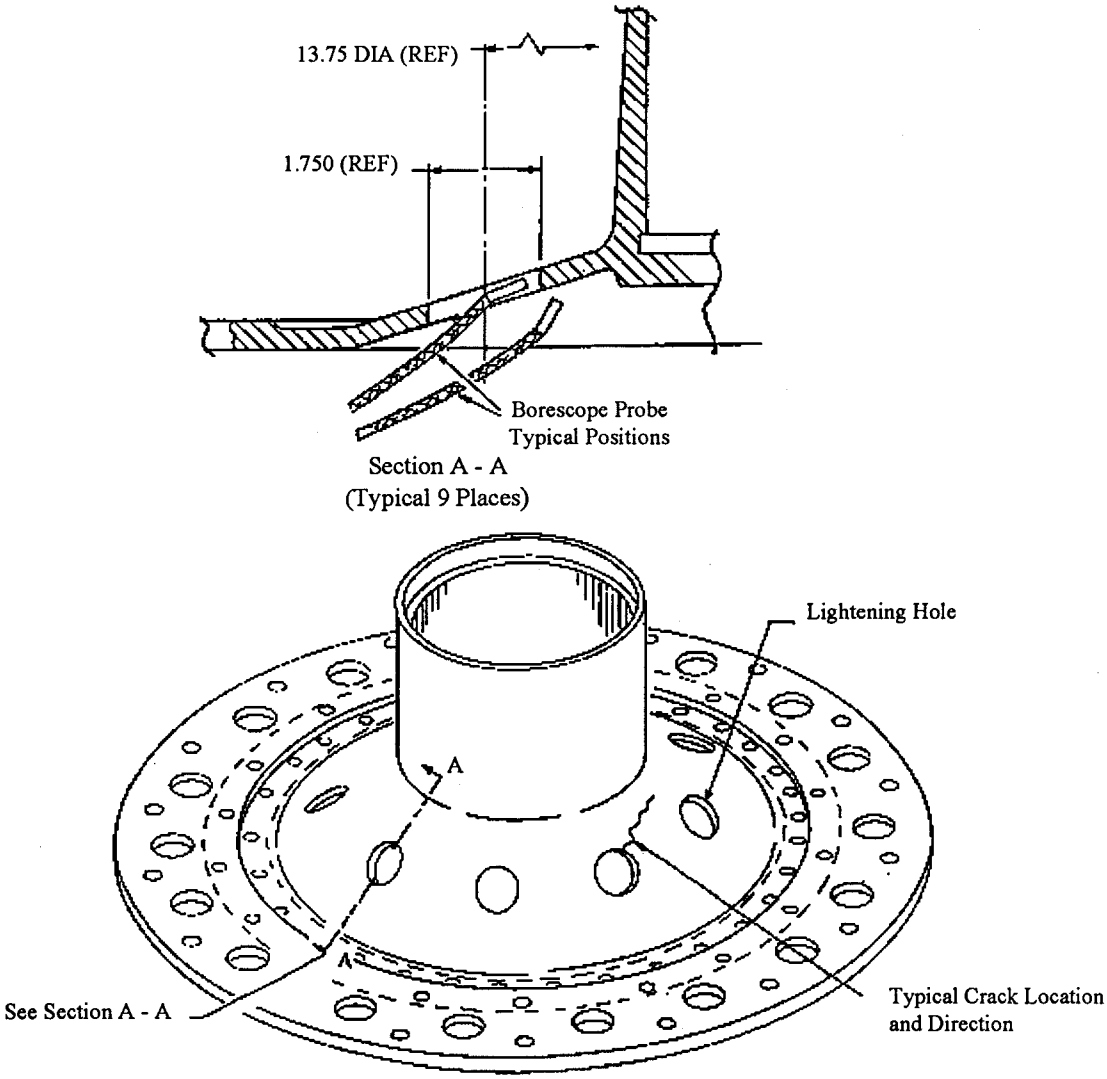

Borescope Inspection of
Second Stage Lower Planetary Plate
Figure 2

BILLING CODE 4910–13–C

(c) On or before the accumulation of 2,600 hours TIS, remove from service plates, P/N 6435–20229–102, reidentified as P/N 6435–20229–102–TS–107 after rework. This AD revises the airworthiness limitation section of the maintenance manual by establishing a retirement life of 2,600 hours TIS for the main gearbox assembly second stage lower planetary plate, P/N 6435–20229–102, reidentified as P/N 6435–20229–102–TS–107 after rework.

(d) An alternative method of compliance or adjustment of the compliance time that provides an acceptable level of safety may be used if approved by the Manager, Rotorcraft Certification Office, Rotorcraft Directorate, FAA. Operators shall submit their requests through an FAA Principal Maintenance Inspector, who may concur or comment and then send it to the Manager, Rotorcraft Certification Office.

Note 2: Information concerning the existence of approved alternative methods of compliance with this AD, if any, may be obtained from the Rotorcraft Certification Office.

(e) Special flight permits may be issued in accordance with sections 21.197 and 21.199 of the Federal Aviation Regulations (14 CFR 21.197 and 21.199) to operate the helicopter to a location where the requirements of this AD can be accomplished.

(f) This amendment becomes effective on October 19, 2000.

Issued in Fort Worth, Texas, on September 5, 2000.

Henry A. Armstrong,

Manager, Rotorcraft Directorate, Aircraft Certification Service.

[FR Doc. 00–23583 Filed 9–13–00; 8:45 am]

BILLING CODE 4910–13–P

DEPARTMENT OF TRANSPORTATION

Federal Aviation Administration

14 CFR Part 39

[Docket No. 2000–SW–39–AD; Amendment 39–11900; AD 2000–16–52]

RIN 2120–AA64

Airworthiness Directives; Eurocopter France Model AS350B3 Helicopters

AGENCY: Federal Aviation Administration, DOT.

ACTION: Final rule; request for comments.

SUMMARY: This document publishes in the **Federal Register** an amendment adopting Emergency Airworthiness Directive (AD) 2000–16–52 which was sent previously to all known U.S. owners and operators of Eurocopter France (ECF) Model AS350B3 helicopters by individual letters. This AD requires visually inspecting the heat shield attachment areas on the tail rotor drive shaft forward fairing (fairing) for a crack. This AD also requires, at specified time intervals, removing the fairing and inspecting the heat shield attachment areas on the fairing for a crack. If a crack is found, this AD requires replacing the fairing with an airworthy fairing. This amendment is prompted by an in-flight loss of the fairing heat shield due to cracking in the areas where the heat shield is attached to the fairing. The actions specified by this AD are intended to prevent an in-flight loss of the heat shield, impact with tail or main rotor blades, and subsequent loss of control of the helicopter.

DATES: Effective September 29, 2000, to all persons except those persons to whom it was made immediately effective by Emergency AD 2000–16–52, issued on August 11, 2000, which contained the requirements of this amendment.

Comments for inclusion in the Rules Docket must be received on or before November 13, 2000.

ADDRESSES: Submit comments in triplicate to the Federal Aviation Administration (FAA), Office of the Regional Counsel, Southwest Region, Attention: Rules Docket No. 2000–SW–39–AD, 2601 Meacham Blvd., Room 663, Fort Worth, Texas 76137. You may also send comments electronically to the Rules Docket at the following address: 9__asw__adcomments@faa.gov.

FOR FURTHER INFORMATION CONTACT: Jim Grigg, Aviation Safety Engineer, FAA, Rotorcraft Directorate, Regulations Group, Fort Worth, Texas 76193–0111, telephone (817) 222–5490, fax (817) 222–5961.

SUPPLEMENTARY INFORMATION: On August 11, 2000, the FAA issued Emergency AD 2000–16–52 for ECF Model AS350B3 helicopters which requires visually inspecting the heat shield attachment areas on the fairing for a crack. That Emergency AD also requires, at specified time intervals, removing the fairing and inspecting the heat shield attachment areas on the fairing for a crack. If a crack is found, the Emergency AD requires replacing the fairing with an airworthy fairing. That action was prompted by an in-flight loss of the fairing heat shield due to cracking in the areas where the heat shield is attached to the fairing. This condition, if not corrected, could result in an in-flight loss of the heat shield, impact with tail or main rotor blades, and subsequent loss of control of the helicopter.

Since the unsafe condition described is likely to exist or develop on other ECF Model AS350B3 helicopters of the same type design, the FAA issued Emergency AD 2000–16–52 to prevent an in-flight loss of the heat shield, impact with tail or main rotor blades, and subsequent loss of control of the helicopter. The AD requires, before the first flight of each day, visually inspecting the heat shield attachment areas on the fairing for a crack. The AD also requires within 50 hours time-in-service (TIS) and thereafter at intervals not to exceed 50 hours TIS, removing the fairing and inspecting the heat shield attachment areas on the fairing for a crack. If a crack is found, the AD requires replacing the fairing with an airworthy fairing. The short compliance time involved is required because the previously described critical unsafe condition can adversely affect the structural integrity and controllability of the helicopter. Therefore, the actions listed previously are required before the first flight of each day, and this AD must be issued immediately.

Since it was found that immediate corrective action was required, notice and opportunity for prior public comment thereon were impracticable and contrary to the public interest, and good cause existed to make the AD effective immediately by individual letters issued on August 11, 2000 to all known U.S. owners and operators of ECF Model AS350B3 helicopters. These conditions still exist, and the AD is hereby published in the **Federal Register** as an amendment to section 39.13 of the Federal Aviation Regulations (14 CFR 39.13) to make it effective to all persons.

The FAA estimates that 22 helicopters of U.S. registry will be affected by this AD. It will take approximately 0.25 work hour per helicopter to inspect the fairing without removing it from the helicopter; and 2 work hours per helicopter to remove, inspect, and reinstall the fairing. The average labor rate is $60 per work hour. Required parts if the fairing needs to be replaced will cost approximately $1217 per helicopter. Based on these figures, the total cost impact of the AD on U.S. operators is estimated to be $13,530 per month, assuming 25 fairing inspections, 2 fairing removals and inspections, and no fairing replacements.

Comments Invited

Although this action is in the form of a final rule that involves requirements affecting flight safety and, thus, was not preceded by notice and an opportunity for public comment, comments are invited on this rule. Interested persons are invited to comment on this rule by submitting such written data, views, or arguments as they may desire. Communications should identify the Rules Docket number and be submitted in triplicate to the address specified under the caption **ADDRESSES**. All communications received on or before the closing date for comments will be considered, and this rule may be amended in light of the comments received. Factual information that supports the commenter's ideas and suggestions is extremely helpful in evaluating the effectiveness of the AD action and determining whether additional rulemaking action would be needed.

Comments are specifically invited on the overall regulatory, economic, environmental, and energy aspects of the rule that might suggest a need to modify the rule. All comments submitted will be available, both before and after the closing date for comments, in the Rules Docket for examination by interested persons. A report that summarizes each FAA-public contact concerned with the substance of this AD will be filed in the Rules Docket.

Commenters wishing the FAA to acknowledge receipt of their mailed comments submitted in response to this rule must submit a self-addressed, stamped postcard on which the following statement is made:

''Comments to Docket No. 2000–SW–39–AD.'' The postcard will be date stamped and returned to the commenter.

The regulations adopted herein will not have a substantial direct effect on the States, on the relationship between the national Government and the States, or on the distribution of power and responsibilities among the various levels of government. Therefore, it is determined that this final rule does not have federalism implications under Executive Order 13132.

The FAA has determined that this regulation is an emergency regulation that must be issued immediately to correct an unsafe condition in aircraft, and that it is not a ''significant regulatory action'' under Executive Order 12866. It has been determined further that this action involves an emergency regulation under DOT Regulatory Policies and Procedures (44 FR 11034, February 26, 1979). If it is determined that this emergency regulation otherwise would be significant under DOT Regulatory Policies and Procedures, a final regulatory evaluation will be prepared and placed in the Rules Docket. A copy of it, if filed, may be obtained from the FAA, Office of the Regional Counsel, Southwest Region, 2601 Meacham Blvd., Room 663, Fort Worth, Texas.

List of Subjects in 14 CFR Part 39

Air transportation, Aircraft, Aviation safety, Safety.

Adoption of the Amendment

Accordingly, pursuant to the authority delegated to me by the Administrator, the Federal Aviation Administration amends part 39 of the Federal Aviation Regulations (14 CFR part 39) as follows:

PART 39—AIRWORTHINESS DIRECTIVES

1. The authority citation for part 39 continues to read as follows:

Authority: 49 U.S.C. 106(g), 40113, 44701.

§ 39.13 [Amended]

2. Section 39.13 is amended by adding a new airworthiness directive to read as follows:

2000–16–52 Eurocopter France: Amendment 39–11900. Docket No. 2000–SW–39–AD.

Applicability: Model AS350B3 helicopters with tail rotor drive shaft forward fairing (fairing), part number 350A23–0032–09, installed, certificated in any category.

Note 1: This AD applies to each helicopter identified in the preceding applicability provision, regardless of whether it has been otherwise modified, altered, or repaired in the area subject to the requirements of this AD. For helicopters that have been modified, altered, or repaired so that the performance of the requirements of this AD is affected, the owner/operator must request approval for an alternative method of compliance in accordance with paragraph (c) of this AD. The request should include an assessment of the effect of the modification, alteration, or repair on the unsafe condition addressed by this AD; and if the unsafe condition has not been eliminated, the request should include specific proposed actions to address it.

Compliance: Required as indicated, unless accomplished previously.

To prevent in-flight loss of a fairing heat shield, impact with tail or main rotor blades, and subsequent loss of control of the helicopter, accomplish the following:

(a) Before the first flight of each day, visually inspect the fairing at the left and right side heat shield attachment areas (three on each side) for a crack. If a crack is found, replace the fairing with an airworthy fairing before further flight.

(b) Within 50 hours time-in-service (TIS) and thereafter at intervals not to exceed 50 hours TIS, remove the fairing and inspect the left, right, and top heat shield attachment areas (three on each side and three on top) for a crack. If a crack is found, replace the fairing with an airworthy fairing before further flight.

Note 2: Eurocopter Service Telex No. 05.00.35, undated, pertains to the subject of this AD.

(c) An alternative method of compliance or adjustment of the compliance time that provides an acceptable level of safety may be used if approved by the Manager, Regulations Group, Rotorcraft Directorate, FAA. Operators shall submit their requests through an FAA Principal Maintenance Inspector, who may concur or comment and then send it to the Manager, Regulations Group.

Note 3: Information concerning the existence of approved alternative methods of compliance with this AD, if any, may be obtained from the Regulations Group.

(d) Special flight permits will not be issued.

(e) This amendment becomes effective on September 29, 2000, to all persons except those persons to whom it was made immediately effective by Emergency AD 2000–16–52, issued August 11, 2000, which contained the requirements of this amendment.

Note 4: The subject of this AD is addressed in Direction Generale De L'Aviation Civile (France) AD T2000–340–080(A), dated July 31, 2000, and AD 2000–340–080(A), dated August 9, 2000.

Issued in Fort Worth, Texas, on September 5, 2000.

Henry A. Armstrong,

Manager, Rotorcraft Directorate, Aircraft Certification Service.

[FR Doc. 00–23584 Filed 9–13–00; 8:45 am]

BILLING CODE 4910–13–P

DEPARTMENT OF TRANSPORTATION

Federal Aviation Administration

14 CFR Part 97

[Docket No. 30188; Amdt. No. 2009]

Standard Instrument Approach Procedures; Miscellaneous Amendments

AGENCY: Federal Aviation Administration (FAA), DOT.

ACTION: Final rule.

SUMMARY: This amendment establishes, amends, suspends, or revokes Standard Instrument Approach Procedures (SIAPs) for operations at certain airports. These regulatory actions are needed because of the adoption of new or revised criteria, or because of changes occurring in the National Airspace System, such as the commissioning of new navigational facilities, addition of new obstacles, or changes in air traffic requirements. These changes are designed to provide safe and efficient use of the navigable airspace and to promote safe flight operations under instrument flight rules at the affected airports.

DATES: An effective date for each SIAP is specified in the amendatory provisions.

Incorporation by reference-approved by the Director of the Federal Register on December 31, 1980, and reapproved as of January 1, 1982.

ADDRESSES: Availability of matters incorporated by reference in the amendment is as follows:

For Examination—

1. FAA Rules docket, FAA Headquarters Building, 800 Independence Avenue, SW., Washington, DC 20591;

2. The FAA Regional Office of the region in which the affected airport is located; or

3. The Flight Inspection Area Office which originated the SIAP.

For Purchase—Individual SIAP copies may be obtained from:

1. FAA Public Inquiry Center (APA–200), FAA Headquarters Building, 800 Independence Avenue, SW., Washington, DC 20591; or

2. The FAA Regional Office of the region in which the affected airport is located.

By Subscription—Copies of all SIAPs, mailed once every 2 weeks, are for sale by the Superintendent of Documents, U.S. Government Printing Office, Washington, DC 20402.

FOR FURTHER INFORMATION CONTACT: Donald P. Pate, Flight Procedure

Standards Branch (AMCAFS–420), Flight Technologies and Programs Division, Flight Standards Service, Federal Aviation Administration, Mike Monroney Aeronautical Center, 6500 South MacArthur Blvd. Oklahoma City, OK. 73169 (Mail Address: P.O. Box 25082 Oklahoma City, OK. 73125) telephone: (405) 954–4164.

SUPPLEMENTARY INFORMATION: This amendment to part 97 of the Federal Aviation Regulations (14 CFR part 97) establishes, amends, suspends, or revokes Standard Instrument Approach Procedures (SIAPs). The complete regulatory description of each SIAP is contained in official FAA form documents which are incorporated by reference in this amendment under 5 U.S.C. 552(a), 1 CFR part 51, and § 97.20 of the Federal Aviation Regulations (FAR). The applicable FAA Forms are identified as FAA Forms 8260–3, 8260–4, and 8260–5. Materials incorporated by reference are available for examination or purchase as stated above.

The large number of SIAPs, their complex nature, and the need for a special format make their verbatim publication in the **Federal Register** expensive and impractical. Further, airmen do not use the regulatory text of the SIAPs, but refer to their graphic depiction on charts printed by publishers of aeronautical materials. Thus, the advantages of incorporation by reference are realized and publication of the complete description of each SIAP contained in FAA form documents is unnecessary. The provisions of this amendment state the affected CFR (and FAR) sections, with the types and effective dates of the SIAPs. This amendment also identifies the airport, its location, the procedure identification and the amendment number.

The Rule

This amendment to part 97 is effective upon publication of each separate SIAP as contained in the transmittal. Some SIAP amendments may have been previously issued by the FAA in a National Flight Data Center (NFDC) Notice to Airmen (NOTAM) as an emergency action of immediate flight safety relating directly to published aeronautical charts. The circumstances which created the need for some SIAP amendments may require making them effective in less than 30 days. For the remaining SIAPs, an effective date at least 30 days after publication is provided.

Further, the SIAPs contained in this amendment are based on the criteria contained in the U.S. Standard for Terminal Instrument Procedures (TERPS). In developing these SIAPs, the TERPS criteria were applied to the conditions existing or anticipated at the affected airports. Because of the close and immediate relationship between these SIAPs and safety in air commerce, I find that notice and public procedure before adopting these SIAPs are impracticable and contrary to the public interest and, where applicable, that good cause exists for making some SIAPs effective in less than 30 days.

Conclusion

The FAA has determined that this regulation only involves an established body of technical regulations for which frequent and routine amendments are necessary to keep them operationally current. It, therefore—(1) is not a ''significant regulatory action'' under Executive Order 12866; (2) is not a ''significant rule'' under DOT Regulatory Policies and Procedures (44 FR 11034; February 26, 1979); and (3) does not warrant preparation of a regulatory evaluation as the anticipated impact is so minimal. For the same reason, the FAA certifies that this amendment will not have a significant economic impact on a substantial number of small entities under the criteria of the Regulatory Flexibility Act.

List of Subjects in 14 CFR Part 97

Air traffic control, Airports, Navigation (air).

Issued in Washington, DC on September 1, 2000.

L. Nicholas Lacey,

Director, Flight Standards Service.

Adoption of the Amendment

Accordingly, pursuant to the authority delegated to me, part 97 of the Federal Aviation Regulations (14 CFR part 97) is amended by establishing, amending, suspending, or revoking Standard Instrument Approach Procedures, effective at 0901 UTC on the dates specified, as follows:

PART 97—STANDARD INSTRUMENT APPROACH PROCEDURES

1. The authority citation for part 97 is revised to read as follows:

Authority: 49 U.S.C. 106(g), 40103, 40113, 40120, 44701; and 14 CFR 11.49(b)(2).

2. Part 97 is amended to read as follows:

§§ 97.23, 97.25, 97.27, 97.29, 97.31, 97.33, 97.35 [Amended]

By amending: § 97.23 VOR, VOR/DME, VOR or TACAN, and VOR/DME or TACAN; § 97.25 LOC, LOC/DME, LDA, LDA/DME, SDF, SDF/DME; § 97.27 NDB, NDB/DME; § 97.29 ILS, ILS/DME, ISMLS, MLS, MLS/DME, MLS/RNAV; § 97.31 RADAR SIAPs; § 97.33 RNAV SIAPs; and § 97.35 COPTER SIAPs, identified as follows:

** * * Effective October 5, 2000*

Gulkana, AK, Gulkana, RNAV RWY 14, Orig
Gulkana, AK, Gulkana, RNAV RWY 32, Orig
Phoenix, AZ, Phoenix Sky Harbor Intl, ILS RWY 7R, Orig
Phoenix, AZ, Phoenix Sky Harbor Intl, ILS RWY 25L, Orig
Phoenix, AZ, Phoenix Sky Harbor Intl, RNAV RWY 7L, Orig
Phoenix, AZ, Phoenix Sky Harbor Intl, RNAV RWY 8, Orig
Phoenix, AZ, Phoenix Sky Harbor Intl, RNAV RWY 26, Orig
Phoenix, AZ, Phoenix Sky Harbor Intl, RNAV RWY 25R, Orig
Phoenix, AZ, Phoenix Sky Harbor Intl, GPS RWY 26R, Orig, CANCELLED
Phoenix, AZ, Phoenix Sky Harbor Intl, GPS RWY 26L, Orig, CANCELLED
Phoenix, AZ, Phoenix Sky Harbor Intl, GPS RWY 8R, Orig, CANCELLED
Phoenix, AZ, Phoenix Sky Harbor Intl, GPS RWY 8L, Orig-A, CANCELLED
Phoenix, AZ, Williams Gateway, RNAV RWY 12C, Orig
Phoenix, AZ, Williams Gateway, RNAV RWY 12R, Orig
Phoenix, AZ, Williams Gateway, RNAV RWY 30L, Orig
Fresno, CA, Fresno Yosemite Intl, VOR/DME OR TACAN RWY 29R, Orig
Fresno, CA, Fresno Yosemite Intl, LOC RWY 11L, Orig
Fresno, CA, Fresno Yosemite Intl, LOC BC RWY 11L, Amdt 8A, CANCELLED
Fresno, CA, Fresno Yosemite Intl, NDB RWY 29R, Amdt 24
Fresno, CA, Fresno Yosemite Intl, ILS RWY 29R, Amdt 34
Sacramento, CA, McClellan Airfield, VOR/DME OR TACAN RWY 16, Orig
Sacramento, CA, McClellan Airfield, VOR/DME OR TACAN RWY 34, Orig
Sacramento, CA, McClellan Airfield, ILS RWY 16, Orig
Holyoke, CO, Holyoke, NDB RWY 17, Amdt 1A, CANCELLED
Holyoke, CO, Holyoke, NDB RWY 35, Amdt 1A, CANCELLED
Holyoke, CO, Holyoke, GPS RWY 17, Orig-A, CANCELLED
Holyoke, CO, Holyoke, GPS RWY 35, Orig, CANCELLED
Cocoa, FL, Merritt Island, NDB RWY 11, Amdt 1, CANCELLED
Cocoa, FL, Merritt Island, GPS RWY 11, Amdt 1, CANCELLED
Jacksonville, FL, Jacksonville Intl, ILS RWY 13, Amdt 6
Jacksonville, FL, Jacksonville Intl, ILS RWY 25, Amdt 1

Jacksonville, Fl, Jacksonville Intl, RNAV RWY 7, Orig
Jacksonville, FL, Jacksonville Intl, RNAV RWY 13, Orig
Jacksonville, FL, Jacksonville Intl, RNAV RWY 25, Orig
Ocala, FL, Ocala Regional/Jim Taylor Field, RNAV RWY 18, Orig
Ocala, FL, Ocala Regional/Jim Taylor Field, GPS RWY 18, Orig, CANCELLED
Ocala, FL, Ocala Regional/Jim Taylor Field, GPS RWY 36, Orig, CANCELLED
Ocala, FL, Ocala Regional/Jim Taylor Field, RNAV RWY 36, Orig
Merritt Island, FL, Merritt Island, NDB RWY 11, Orig
Merritt Island, FL, Merritt Island, RNAV RWY 11, Orig
Vero Beach, FL, Vero Beach Muni, RNAV RWY 11R, Orig
Vero Beach, FL, Vero Beach Muni, RNAV RWY 29L, Orig
Estherville, IA, Estherville Muni, RNAV RWY 16, Orig
Estherville, IA, Estherville Muni, RNAV RWY 34, Orig
Mason City, IA, Mason City Muni, VOR/DME RNAV OR GPS RWY 30, Amdt 5, CANCELLED
Mason City, IA, Mason City, Muni, RNAV RWY 30, Orig
Hailey, ID, Friedman Memorial, GPS RWY 31, Orig-A, CANCELLED
Hailey, ID, Friedman Memorial, RNAV RWY 31, Orig
Winamac, IN, Arens Field, RNAV RWY 9, Orig
Winamac, IN, Arens Field, RNAV RWY 27, Orig
Cumberland, MD, Greater Cumberland Regional, RNAV RWY 5, Orig
Princeton, ME, Princeton Muni, VOR OR GPS RWY 15, Amdt 10, CANCELLED
Princeton, ME, Princeton Muni, RNAV RWY 15, Orig
Ionia, MI, Ionia County, RNAV RWY 27, Orig
Marlette, MI, Marlette, RNAV RWY 9, Orig
Marlette, MI, Marlette, RNAV RWY 27, Orig
Troy, MI, Oakland/Troy, GPS RWY 9, Orig, CANCELLED
Troy, MI, Oakland,Troy, RNAV RWY 9, Orig
Pine River, MN, Pine River Regional, RNAV RWY 34, Orig
Grand Island, NE, Central Nebraska Regional, RNAV RWY 13, Orig
Grand Island, NE, Central Nebraska Regional, RNAV RWY 17, Orig
Grand Island, NE, Central Nebraska Regional, RNAV RWY 31, Orig
Grand Island, NE, Central Nebraska Regional, RNAV RWY 35, Orig
Norfolk, NE, Karl Stefan Memorial, GPS RWY 1, Orig, CANCELLED
Norfolk, NE, Karl Stefan Memorial, RNAV RWY 1, Orig
Norfolk, NE, Karl Stefan Memorial, RNAV RWY 19, Orig
Norfolk, NE, Karl Stefan Memorial, RNAV RWY 13, Orig
Norfolk, NE, Karl Stefan Memorial, RNAV RWY 31, Orig
Valentine, NE, Miller Field, RNAV RWY 32, Orig
Valentine, NE, Miller Field, GPS RWY 32, Orig, CANCELLED
Wayne, NE, Wayne Muni, RNAV RWY 17, Orig
Wayne, NE, Wayne Muni, RNAV RWY 35, Orig
Plattsburgh, NY, Plattsburgh Intl, VOR/DME RWY 35, Orig
Plattsburgh, NY, Plattsburgh Intl, ILS RWY 17, Orig
Rome, NY, Griffiss Airpark, ILS RWY 15, Orig
Rome, NY, Griffiss Airpark, ILS RWY 33, Orig
Rome, NY, Griffiss Airpark, VOR/DME RWY 15, Orig
Rome, NY, Griffiss Airpark, VOR/DME RWY 33, Orig
Cincinnati, OH, Cincinnati Muni Airport-Lunken Field, NDB OR GPS RWY 21L, Amdt 15
Cincinnati, OH, Cincinnati Muni Airport-Lunken Field, NDB OR GPS RWY 25, Amdt 9
Cincinnati, OH, Cincinnati Muni Airport-Lunken Field, ILS RWY 21L, Amdt 17
Scappoose, OR, Scappoose Industrial Airpark, VOR/DME OR GPS-A, Amdt 2
Rapid City, SD, Rapid City Regional, RNAV RWY 32, Orig
Somerville, TN, Fayette County, RNAV RWY 19, Orig
Anahuac, TX, Chambers County, RNAV RWY 12, Orig
Anahuac, TX, Chambers County, GPS RWY 12, Orig, CANCELLED
Bonham, TX, Jones Field, RNAV RWY 17 ,Orig
La Grange, TX, Fayette Regional Air Center, RNAV RWY 16, Orig
La Grange, TX, Fayette Regional Air Center, RNAV RWY 34, Orig
Liberty, TX, Liberty Muni, RNAV RWY 16, Orig
Liberty, TX, Liberty Muni, GP RWY 16, Orig, CANCELLED
Livingston, TX, Livingston Muni, RNAV RWY 30, Orig
Livingston, TX, Livingston Muni, GPS RWY 30, Orig, CANCELLED
Lufkin, TX, Angelina County, RNAV RWY 25, Orig
Lufkin, TX, Angelina County, GPS RWY 24, Orig, CANCELLED
Lufkin, TX, Angelina County, RNAV RWY 33, Orig
Lufkin, TX, Angelina County, GPS RWY 33, Orig, CANCELLED
Nacogdoches, TX, A L Mangham Jr Regional, RNAV RWY 15, Orig
Nacogdoches, TX, A L Mangham Jr Regional, RNAV RWY 18, Orig
Nacogdoches, TX, A L Mangham Jr Regional, GPS RWY 15, Orig, CANCELLED
Nacogdoches, TX, A L Mangham Jr Regional, GPS RWY 18, Orig, CANCELLED
Palestine, TX, Palestine Muni, RNAV RWY 35, Orig
Palestine, TX, Palestine Muni, GPS RWY 35, Orig, CANCELLED
Seminole, TX, Gaines County, RNAV RWY 35, Orig
Norfolk, VA, Norfolk Intl, RNAV RWY 23, Orig

[FR Doc. 00–23678 Filed 9–13–00; 8:45 am]
BILLING CODE 4910–13–M

DEPARTMENT OF HEALTH AND HUMAN SERVICES

Food and Drug Administration

21 CFR Part 510

New Animal Drugs; Change of Sponsor's Address

AGENCY: Food and Drug Administration, HHS.

ACTION: Final rule.

SUMMARY: The Food and Drug Administration (FDA) is amending the animal drug regulations to reflect a change of sponsor's address for Veterinary Research Associates, Inc.

DATES: This rule is effective September 14, 2000.

FOR FURTHER INFORMATION CONTACT: Norman J. Turner, Center for Veterinary Medicine (HFV–102), Food and Drug Administration, 7500 Standish Pl., Rockville, MD 20855, 301–827–0214.

SUPPLEMENTARY INFORMATION: Veterinary Research Associates, Inc., 20 Old Dock Rd., Yaphank, NY 11980, has informed FDA of a change of sponsor's address to 2817 West Country Rd. 54G, Fort Collins, CO 80524. Accordingly, the agency is amending the regulations in 21 CFR 510.600(c)(1) and (c)(2) to reflect the change of sponsor's address.

This rule does not meet the definition of ''rule'' in 5 U.S.C. 804(3)(A), because it is a rule of ''particular applicability.'' Therefore, it is not subject to congressional review requirements in 5 U.S.C. 801–808.

List of Subjects in 21 CFR Part 510

Administrative practice and procedure, Animal drugs, Labeling, Reporting and recordkeeping requirements.

Therefore, under the Federal Food, Drug, and Cosmetic Act and under authority delegated to the Commissioner of Food and Drugs and redelegated to the Center for Veterinary Medicine, 21 CFR part 510 is amended as follows:

PART 510—NEW ANIMAL DRUGS

1. The authority citation for 21 CFR part 510 continues to read as follows:

Authority: 21 U.S.C. 321, 331, 351, 352, 353, 360b, 371, 379e.

2. Section 510.600 is amended in the table in paragraph (c)(1) by revising the entry for ''Veterinary Research Associates, Inc.'' and in the table in paragraph (c)(2) by revising the entry for ''064408'' to read as follows:

§ 510.600 Names, addresses, and drug labeler codes of sponsors of approved applications.

* * * * *

(c) * * *

(1) * * *

Firm name and address	Drug labeler code
* * * * * * *	
Veterinary Research Associates, Inc., 2817 West Country Rd. 54G, Fort Collins, CO 80524	064408
* * * * * * *	

(2) * * *

Drug labeler code	Firm name and address
* * * * * * *	
064408	Veterinary Research Associates, Inc., 2817 West Country Rd. 54G, Fort Collins, CO 80524
* * * * * * *	

Dated: August 31, 2000.

David R. Newkirk,

Acting Director, Office of New Animal Drug Evaluation, Center for Veterinary Medicine.

[FR Doc. 00–23548 Filed 9–13–00; 8:45 am]

BILLING CODE 4160–01–F

DEPARTMENT OF VETERANS AFFAIRS

38 CFR Part 19

RIN 2900–AK14

Appeals Regulations: Title for Members of the Board of Veterans' Appeals

AGENCY: Department of Veterans Affairs.

ACTION: Final rule.

SUMMARY: This document amends the Department of Veterans Affairs' (VA) Appeals Regulations to provide that a Member of the Board of Veterans' Appeals (Board) may also be known as a ''veterans law judge.''

DATES: *Effective Date:* September 14, 2000.

FOR FURTHER INFORMATION CONTACT: Steven L. Keller, Senior Deputy Vice Chairman, Board of Veterans' Appeals, Department of Veterans Affairs, 810 Vermont Avenue, NW., Washington, DC 20420 (202–565–5978).

SUPPLEMENTARY INFORMATION: The Board of Veterans' Appeals (Board) is an administrative body that decides appeals from denials of claims for veterans' benefits, after an opportunity for a hearing. There are currently 59 Board ''members,'' who decide 35,000 to 40,000 such appeals per year.

Board members other than the Chairman are appointed by the Secretary of Veterans Affairs, with the approval of the President of the United States, 38 U.S.C. 7101A(a)(1), and must be licensed attorneys, 38 U.S.C. 7101A(a)(2). Board members are compensated at rates equivalent to the rates payable to Administrative Law Judges. 38 U.S.C. 7101A(b).

Throughout the Executive Branch, individuals who decide appeals at the administrative level after the opportunity for a hearing—as do Board members—are known as ''judges.'' *E.g.*, ''Administrative Law Judges,'' 5 U.S.C. 3105; ''Administrative Appeals Judges'' at the Benefits Review Board at the Department of Labor, 20 CFR 801.2; ''Administrative Judges'' at The Financial Assistance Appeals Board of the Department of Energy, 10 CFR 1024.3; ''Administrative Judges'' at the Equal Employment Opportunity Commission, 29 CFR 1614.109; ''Administrative Judges'' at the Personnel Appeals Board of the General Accounting Office, 4 CFR 28.3; ''Administrative Judges'' at the Merit Systems Protection Board, 5 CFR 1201.4; ''Administrative Judges'' at the National Aeronautics and Space Administration, 14 CFR 1259.404; and ''Administrative Judges'' at the Office of Hearings and Appeals, Small Business Administration, 13 CFR 134.101. *See also* ''Administrative Appeals Judges'' at the Office of Hearings and Appeals of the Social Security Administration, 20 CFR 416.924(g) (decide appeals from decisions of administrative law judges, but without the opportunity for a hearing); ''Immigration Judges'' at the Immigration and Naturalization Service in the Department of Justice, 8 CFR 1.1(l) (initial decisions in immigration cases).

This final rule will permit Board members to be known as ''veterans law judges.'' This title will convey a Board member's function to veterans more accurately than the term ''member.'' In addition, the title will enhance the confidence of veterans in the administrative appellate process by providing recognition that appeals in

the VA system are adjudicated by legal professionals, as are benefit appeals in other administrative systems.

This final rule concerns agency organization, procedure or practice and, pursuant to 5 U.S.C. 553, is exempt from notice and comment requirements. In addition, because this final rule is not a substantive rule, but rather a rule of agency practice, it is not subject to the delayed effective date provisions of 5 U.S.C. 553(d).

This final rule has been reviewed by the Office of Management and Budget under Executive Order 12866.

The Secretary hereby certifies that this final rule will not have a significant economic impact on a substantial number of small entities as they are defined in the Regulatory Flexibility Act, 5 U.S.C. 601–612. This rule will affect VA beneficiaries and will not affect small businesses.

Therefore, pursuant to 5 U.S.C. 605(b), this final rule is exempt from the initial and final regulatory flexibility analyses requirement of sections 603 and 604.

List of Subjects in 38 CFR Part 19

Administrative practice and procedure, Claims, Veterans.

Approved: July 5, 2000.

Togo D. West, Jr.,

Secretary of Veterans Affairs.

For the reasons set out in the preamble, 38 CFR part 19 is amended as set forth below:

PART 19—BOARD OF VETERANS' APPEALS: APPEALS REGULATIONS

1. The authority citation for part 19 continues to read as follows:

Authority: 38 U.S.C. 501(a), unless otherwise noted.

2. Section 19.2 is revised to read as follows:

§ 19.2 Composition of the Board; Titles.

(a) The Board consists of a Chairman, Vice Chairman, Deputy Vice Chairmen, Members and professional, administrative, clerical and stenographic personnel. Deputy Vice Chairmen are Members of the Board who are appointed to that office by the Secretary upon the recommendation of the Chairman.

(b) A member of the Board (other than the Chairman) may also be known as a ''veterans law judge.'' An individual designated as an acting member pursuant to 38 U.S.C. 7101(c)(1) may also be known as an ''acting veterans law judge.''

(Authority: 38 U.S.C. 501(a), 512, 7101(a))

[FR Doc. 00–23567 Filed 9–13–00; 8:45 am]

BILLING CODE 8320–01–P

POSTAL SERVICE

39 CFR Part 20

Global Direct—Canada Publications Mail

AGENCY: Postal Service.

ACTION: Final rule.

SUMMARY: On August 25, 1999, the Postal Service published in the **Federal Register** (64 FR 46277) an interim rule and request for comment on a new mail service, Global Direct—Canada Publications Mail. The Postal Service hereby gives notice that it is adopting the interim rule; however, the rate structure and the rates are revised to comply with recent changes made by Canada Post Corporation.

EFFECTIVE DATE: September 14, 2000.

FOR FURTHER INFORMATION CONTACT: Walter J. Grandjean, (202) 314–7256.

SUPPLEMENTARY INFORMATION: In cooperation with Canada Post Corporation (CPC), the Postal Service introduced Global Direct—Canada Publications Mail. This international mail service is intended primarily for publishers seeking easier access to the Canadian domestic postal system.

To qualify, a mailer must agree to mail a minimum of 10,000 pieces or 250 pounds of mail per mailing for delivery to Canadian addresses. All mail must conform to the applicable eligibility, makeup, and preparation requirements for Canadian domestic Publications Mail as specified by Canada Post. Specialized software for sorting and address accuracy that is recognized by Canada Post is required. Service is available from six Postal Service facilities.

Ancillary services for local business reply mail and the return of undeliverable mail are also available. Participating mailers must sign a service agreement with the Postal Service that defines the conditions of mailing under which they will enter Global Direct—Canada Publications Mail.

On August 25, 1999, the Postal Service published in the **Federal Register** (64 FR 46277) an interim rule and request for comment on Global Direct—Canada Publications Mail. The Postal Service did not receive any written comments on the interim rule. Accordingly, the Postal Service hereby adopts the interim rule and amends the proposed rates and rate structure. This change in rates is necessary to comply with recent rate changes made by CPC for their domestic Publications Mail service. The rates adopted are less than those originally proposed.

The Postal Service adopts the following amendments to the International Mail Manual, which is incorporated by reference in the Code of Federal Regulations. See 39 CFR 20.1.

A transmittal letter changing the relevant pages in the International Mail Manual will be published and automatically transmitted to all subscribers. Notice of issuance of the transmittal will be published in the **Federal Register** as provided by 39 CFR 20.3.

List of Subjects in 39 CFR Part 20

Foreign relations, International postal service.

PART 20—[AMENDED]

1. The authority citation for 39 CFR part 20 continues to read as follows:

Authority: 5 U.S.C. 552(a); 39 U.S.C. 401, 404, 407, 408.

2. Chapter 6 of the International Mail Manual (IMM) is amended by adding new part 613, Global Direct—Canada Publications Mail, to read as follows:

6 Special Programs

* * * * *

610 Global Direct Service

* * * * *

613 Global Direct—Canada Publications Mail

613.1 Description

Global Direct—Canada Publications Mail is an international mail service that is available on the basis of a service agreement between the Postal Service and a qualifying mailer. Under this service, a mailer must enter newspaper and periodical items that meet the applicable eligibility, makeup, and preparation requirements for Canada Post's domestic Publications Mail. The Postal Service transports the items to Canada for entry into Canada's domestic mail system. The mailer is responsible for ensuring that the items meet Canada Post's makeup and preparation requirements.

613.2 Qualifying Mailers and Mailing Locations

613.21 Qualifying Mailers

Qualifying mailers must agree to mail a minimum of 10,000 items or 250 pounds for delivery to Canadian addresses per mailing. All tendered mailpieces must conform to the

applicable eligibility, makeup, and preparation requirements for Canadian domestic mail, as specified by Canada Post. Specialized sortation software and address accuracy software that is recognized by Canada Post is required.

613.22 Mailing Locations

Mailings may be deposited only at the following offices as specified in the service agreement:

John F Kennedy Airport Mail Center, John F Kennedy International Airport, Building 250, Jamaica NY 11430–9998.

New Jersey International Bulk Mail Center, US Postal Service, 80 Country Rd, Jersey City NJ 07097–9998.

Buffalo Auxiliary Service Facility, Buffalo Processing and Distribution Center, 1200 William St, Buffalo NY 14240–9998.

Detroit Bulk Mail Center, US Postal Service 17500 Oakwood Blvd, Allen Park MI 48101–9755.

Chicago Ohare International Annex, US Postal Service, 514 Express Center DR, Chicago IL 60688–9998.

Seattle Bulk Mail Center, US Postal Service, 34301 9TH Ave S, Federal Way WA 98003–6721.

613.3 Postage

613.31 Rates

The rate of postage is determined by the weight and level of sortation of the items mailed, as specified below:

	Rate
Letter Carrier Presort (LCP)	
Up to First 7.04 oz. (0.44 lbs.) (200 grams):	
Delivery Mode Direct	$0.259
Delivery Facility	0.295
DCF	0.295
Residue	0.462
Over 7.04 oz. (.44 lbs.) (200 grams) Per additional pound	0.555
National Distribution Guide (NDG)	
First 3.52 oz. (0.22 lbs.) (100 grams)	0.347
Over 3.52 oz. (0.22 lbs.) (100 grams) Per additional pound	0.720

Global Direct postage dollars may be added to the ISAL/IPA total for the purpose of determining the discount earned; however, the discount will not be applied to the Global Direct—Canada published rates.

613.32 Canada Post Size Definition

Size	Minimum	Maximum
Per piece	5.5 in. × 3.35 in. × .007 in	
Per bundle		Length + girth: 78.7 in. Greatest dimension: 23.6 in. Height: 7.8 in.
Per roll		Length + 2 × diameter: 41 in. Greatest dimension: 35.4 in.
Per folded newspaper		14.25 in. × 11 in. × 6.4 in.
Per piece		3 lbs.
Per bundle		55 lbs.

613.33 Postage Payment Method

Postage must be paid through an advance deposit account. Qualifying mailers must have the following information printed on one of the first five or last five pages of each newspaper or periodical issue:

a. The words ''Agreement Number 03429792.''

b. The Canadian address to which change of address information and the address blocks of undeliverable copies should be sent. (The Postal Service will provide this address if the mailer does not have a Canadian return address.)

If the publication is mailed under cover, the information outlined above must be clearly visible on the outside of the envelope or, if clear-wrapped, on the front or back cover of the publication.

613.34 Postage Statement

Mailers must complete the total postage on PS Form 3651, *Postage Statement—International Permit Imprint Mail or Bulk Letters to Canada with Permit Imprint or Postage Meter Affixed, and attach a completed worksheet, PS Form 3658, Global Direct—Canada Publications Mail.* Both of these forms are provided by the Postal Service. A set of separate postage statements must be prepared for each individual mailing.

613.4 Preparation Requirements

Mailers are responsible for ensuring that newspapers and periodicals tendered under the Global Direct—Canada Publications Mail service comply with Canada Post's domestic mail preparation requirements.

613.5 Ancillary Services

613.51 Business Reply Service

This service provides for the return of Canadian business reply mail through the Postal Service to a specified address in Canada. Detailed specifications for this service are contained in Publication 524, Global Direct Canada Admail Service Guide. The rates for this service are:

a. $0.45 for items weighing 1.06 ounces (30 grams) or less.

b. $0.65 for items weighing more than 1.06 ounces (30 grams) but not more than 1.76 ounces (50 grams).

613.52 Return of Undeliverable Mail

Only the address block of the publication will be returned. The rate for this service is $0.50 per address block returned.

613.6 Service Agreement

Before the first mailing, mailers must complete and submit PS Form 3681, Global Direct Service Agreement, 14 days prior to their planned mailing date. The Global Direct Service Agreement can be found in Publication 524, Global Direct Canada Admail Service Guide, or on the Postal Service Web site. Concurrent with the establishment of the agreement, instructions are issued to the designated post office of entry regarding the acceptance and verification of the prospective customer's mailpieces.

613.7 Advance Notification

Mailers who are interested in using Global Direct—Canada Publications Mail service must complete PS Form 3682, *Record of Mailing*, five days prior to their planned mailing date. The Record of Mailing can be found in Publication 524, *Global Direct Canada Admail Service Guide*, or on the Postal Service Web site.

Stanley F. Mires,

Chief Counsel, Legislative.

[FR Doc. 00–23657 Filed 9–13–00; 8:45 am]

BILLING CODE 7710–12–P

Proposed Rules

Federal Register

Vol. 65, No. 179

Thursday, September 14, 2000

This section of the FEDERAL REGISTER contains notices to the public of the proposed issuance of rules and regulations. The purpose of these notices is to give interested persons an opportunity to participate in the rule making prior to the adoption of the final rules.

NATIONAL CREDIT UNION ADMINISTRATION

12 CFR Part 741

Requirements for Insurance

AGENCY: National Credit Union Administration (NCUA).

ACTION: Advance notice of proposed rulemaking.

SUMMARY: NCUA is soliciting public comment on whether NCUA should insure state-chartered credit unions that branch outside the United States and, if so, to what extent NCUA should regulate that activity. Information from interested parties will assist NCUA in determining whether to issue a proposed rule.

DATES: The NCUA must receive comments on or before November 13, 2000.

ADDRESSES: Direct comments to Becky Baker, Secretary of the Board. Mail or hand-deliver comments to: National Credit Union Administration, 1775 Duke Street, Alexandria, Virginia 22314–3428, or you may fax comments to (703) 518–6319. Please send comments by one method only.

FOR FURTHER INFORMATION CONTACT: Michael J. McKenna, Senior Staff Attorney, Division of Operations, Office of General Counsel, at the above address or telephone: (703) 518–6540 or Lynn McLaughlin, Program Officer, Office of Examination and Insurance, at the above address or telephone: (703) 518–6360.

SUPPLEMENTARY INFORMATION: This advanced notice of proposed rulemaking addresses the safety and soundness implications of state-chartered credit unions branching outside the United States, when authorized by state statute, to serve members and member groups, including foreign nationals, outside the United States. The key issues raised in this document include NCUA Board policy considerations, legal issues, supervision and examination considerations, options for insuring foreign branches of state-chartered credit unions and options for restricting insurance coverage for state-chartered credit unions operating foreign branches. The NCUA Board is also interested in receiving comment from federal credit unions and state-chartered credit unions that cannot or do not intend to branch overseas concerning the implications of the National Credit Union Share Insurance Fund (NCUSIF) covering any potential insurance losses by credit unions engaged in this activity.

A. Background

NCUA allows a federal credit union (FCU) to serve foreign nationals within its field of membership wherever they reside provided the FCU has the requisite ability, resources, and management expertise. NCUA regulations, however, impose restrictions on this activity as described below.

An FCU can serve foreign nationals outside of the United States only if it has submitted a business plan to its NCUA Regional Office and received written approval from the regional director. Regional directors have the authority to limit the types of services offered to foreign nationals residing overseas if safety and soundness concerns exist. FCUs are permitted to establish service facilities (branches) outside the United States only if the facility is located on a United States military installation or at a United States embassy. In those cases, the credit unions are considered to be on United States territory and, therefore, subject to United States laws and NCUA's regulatory authority. NCUA Board policy prohibits the establishment of an FCU branch for the primary purpose of serving citizens of a foreign nation. (*See* NCUA's Chartering and Field of Membership Manual, Chapter 1, Section XII.)

While the FCU Act and NCUA's rule limit FCUs in serving foreign nationals, they do not limit state-chartered credit unions, which may have broader authority to serve foreign nationals under state law. It is NCUA's understanding that some states either permit foreign branching for state chartered credit unions or are considering legislation to provide this authority. While actual foreign branching is not prevalent at this time, it is appropriate to address regulatory and supervisory concerns before the practice becomes widespread.

B. Legal Issues; Federal Reserve Act Requirements for Foreign Accounts and Federal Deposit Insurance Requirements

If NCUA insures member accounts in foreign branches, there will be a number of legal issues to be addressed. A credit union operating in a foreign country is under the jurisdiction of the host country's laws. Those laws may conflict with the Federal Credit Union Act and NCUA's Rules and Regulations. There is also a question of whether NCUA could adequately exercise its liquidation powers when placing a credit union into conservatorship or liquidation based upon the unique nature of a host country's laws.

The Federal Reserve Board's Regulation K sets forth many of the requirements for U.S. banks operating overseas. 12 CFR 211. They include:

- Foreign branches of U.S. banking organizations must have at least $1 million in capital and surplus.
- Additional appropriated reserves may be required depending on risk.
- There are limits on lending as a percentage of capital.
- The establishment of a foreign branch requires the prior approval of the Federal Reserve Board.

The Federal Deposit Insurance Corporation reviews the insurance application for each branch located outside the United States. When reviewing an insurance application for foreign banks or foreign branches, FDIC must consider:

(1) The financial history and condition of the bank,

(2) The adequacy of its capital structure,

(3) Its future earnings prospects,

(4) The general character and fitness of its management, including but not limited to the management of the branch proposed to be insured,

(5) The risk presented to the Bank Insurance Fund or the Savings Association Insurance Fund,

(6) The convenience and needs of the community to be served by the branch,

(7) Whether or not its corporate powers, insofar as they will be exercised through the proposed insured branch, are consistent with the purposes of this Act, and

(8) The probable adequacy and reliability of information supplied and

to be supplied by the bank to the Corporation to enable it to carry out its functions under this Act.

12 U.S.C. 1815(b). This review is similar to NCUA's review of an insurance application under the Federal Credit Union Act. 12 U.S.C. 1781(c)(1).

Bank and thrift deposits held outside the United States are not insured unless the financial institution has an express agreement with the depositor. The term ''deposit'' is defined to exclude:

> [A]ny obligation of a depository institution which is carried on the books and records of an office of such bank or savings association located outside of any State, unless: (i) Such obligation would be a deposit if it were carried on the books and records of the depository institution, and would be payable at, an office located in any State; and (ii) the contract evidencing the obligation provides by express terms, and not by implication, for payment at an office of the depository institution located in any State.

12 U.S.C. 1813(l)(5)(A). An account in a foreign branch of an FDIC-insured branch is a ''deposit'', and therefore insured, only if it meets the above definition. It is NCUA's understanding that the general practice in the banking industry is to establish accounts in foreign branches as uninsured accounts.

There is no comparable definition of deposit or share account in the Act or NCUA's regulations that provides a credit union with the ability to choose whether a foreign share account is federally-insured. Therefore, without a regulatory change, if a state-chartered federally-insured credit union opens a branch office outside the United States, the member share accounts at that branch would be federally-insured.

C. Regulatory and Supervisory Issues Related to the National Credit Union Share Insurance Fund

Section 201(c)(1) of the FCU Act (12 U.S.C. 1781(c)(1)) authorizes NCUA to determine insurability of accounts of federally-insured state-chartered credit unions. Section 201(c)(1) states, in part, that the NCUA Board shall disapprove the application of any credit union for insurance of its member accounts if it finds that:

> [I]nsurance of its member accounts would otherwise involve undue risk to the fund, or that its powers and purposes are inconsistent with the promotion of thrift among its members and the creation of a source of credit for provident or productive purposes.

Insuring foreign national member accounts in state-chartered credit union branches established outside of the U.S. will present challenging supervisory problems. A key area of concern will be the enforcement of NCUA's liquidation and conservatorship powers.

NCUA has previously encountered some difficulties liquidating credit unions with offices located outside of the 50 states. Some of the challenges encountered by NCUA included problems in the collection of loans, difficulty in finding local counsel to do collection work and fraud investigations, problems in securing assistance from the local taxing authority and lack of the necessary enforcement powers to pursue NCUA's legal rights.

Supervisory issues regarding branches located outside the United States could include increased costs to NCUA in hiring additional staff and educating existing examiners about the unique problems associated with supervision of a foreign branch. Examiners and credit union management will need to understand the laws of the foreign country where they are operating to ensure compliance with tax responsibilities, consumer compliance laws, employment laws, capital requirements, and other requirements of foreign laws. In addition, problems may arise with on-site management of a foreign branch, who may be recruited from the host country. NCUA may not be able to obtain adequate information on the manager's background, experience, and expertise. This may present problems because NCUA needs this information to approve appointments and changes in officials for newly chartered credit unions or credit unions in troubled condition. 12 CFR 701.14. Other practical problems of supervising foreign operations include loan collection, currency conversion, licensing requirements, and obtaining permission of the host country's regulators.

NCUA and state supervisory authorities (SSAs) will encounter numerous examination issues if state-chartered credit unions engage in foreign branching. Although it is difficult to foretell how the variety of accounting practices and standards will be handled in a foreign branch, it would seem likely the accounting standards in that country will prevail. If so, because those standards may contain a possible different assessment of full and fair disclosure, the domestic credit union will have to include a financial analysis of the risk to the NCUSIF presented by foreign branch operations. To reduce this risk, NCUA may want to consider requiring an opinion audit of credit unions with foreign branches. While not insurmountable, other issues will also have to be addressed such as examination standards for credit unions with foreign operations, examination completion and supervision responsibility, 5300 report collection and resolution of disputes between NCUA, the SSA, and foreign regulators.

Along with supervision and examination issues, there are safety and soundness considerations when a credit union becomes involved in foreign branching. Since the branch is located on foreign territory, NCUA and the SSA have no authority to insulate the branch from the impact of foreign law. These laws, when applied to situations such as collection of delinquent loans, collateralization and repossession of loans in general, and liquidation of a failing branch, may present a higher risk to the NCUSIF than that of a stateside credit union. Fluctuating exchange rates caused by maintaining shares in foreign currency will also present an ongoing challenge to credit unions and the NCUSIF.

To address some of these issues, NCUA may want to consider the FDIC model of higher capital requirements, for credit unions involved in foreign branching. NCUA may also want to consider a different method of evaluation of the allowance for loan losses, to take into account the additional risk of managing loan collection in foreign countries.

Whether a credit union can obtain adequate bond coverage for foreign operations must also be evaluated. Fidelity bond coverage is required of all federally-insured credit unions pursuant to Section 741.201 of NCUA's Regulations.

D. NCUA Board Options for Insuring Foreign Branches of State-Chartered Credit Unions

The NCUA Board is considering numerous options to address the issues identified above. One option is to only permit federally-insured state chartered credit unions to serve foreign nationals in their field of membership, on the same terms currently permitted for federal credit unions. That is, foreign nationals in the field of membership could be served pursuant to an approved business plan, with branches being limited to U.S embassies and U.S. military installations. Another option is to insure state chartered credit unions that operate foreign branches, but with regulatory limitations designed to mitigate risk to the NCUSIF. The following are among the limitations that might be considered:

- Allow foreign branches for the purpose of serving employees of U.S. or international organizations in the credit unions field of membership, but prohibit select employee group expansions or other expansion based on the foreign branch;

• Provide that accounts at foreign branches are not insured, or to provide an option as to whether they are insured;

• Require a separate application for insurance for foreign branch operations with factors to be considered enumerated in NCUA's regulations;

• Limit the amount of total loans, issued at a foreign branch, in relation to insured and uninsured shares;

• Require specific, minimum capital amounts based on the size of the loan portfolio and require mandatory charge-offs of loans greater than 120 days past due; and

• Limit the amount of loans to foreign nationals outside the United States to the uninsured deposits at the foreign branch. Uninsured shares would act as the primary offset for loan loses after capital reserved for the branch is depleted.

The above-noted items are presented as examples of options that the NCUA Board may consider. The NCUA Board welcomes other suggestions from credit unions and other interested parties.

By the National Credit Union Administration Board on September 7, 2000.

Becky Baker,

Secretary of the Board.

[FR Doc. 00–23464 Filed 9–13–00; 8:45 am]

BILLING CODE 7535–01–U

DEPARTMENT OF TRANSPORTATION

Federal Aviation Administration

14 CFR Part 39

[Docket No. 2000–CE–49–AD]

RIN 2120–AA64

Airworthiness Directives; S.N. CENTRAIR 101 Series Gliders

AGENCY: Federal Aviation Administration, DOT.

ACTION: Notice of proposed rulemaking (NPRM).

SUMMARY: This document proposes to adopt a new airworthiness directive (AD) that would apply to certain S.N. CENTRAIR 101 series gliders. The proposed AD would require you to inspect the airbrake control system for cracks; and if cracks are detected, replace the airbrake control system. The proposed AD is the result of mandatory continuing airworthiness information (MCAI) issued by the airworthiness authority for the France. The actions specified in the proposed AD are intended to detect cracks in the airbrake control system and replace cracked parts with parts of improved design. A crack in the airbrake control system could prevent the pilot from using the airbrake system.

DATES: The Federal Aviation Administration (FAA) must receive any comments on this proposed rule by October 16, 2000.

ADDRESSES: Send comments in triplicate to the Federal Aviation Administration (FAA), Central Region, Office of the Regional Counsel, Attention: Rules Docket No. 2000–CE–49–AD, 901 Locust, Room 506, Kansas City, Missouri 64106. You may read comments at this location between 8 a.m. and 4 p.m., Monday through Friday, except holidays.

You may get service information that applies to the proposed AD from S.N. CENTRAIR, Aerodome—36300 Le Blanc, France; telephone: 02.54.37.07.96; facsimile: 02.54.37.48.64. You may read this information at the Rules Docket at the above address.

FOR FURTHER INFORMATION CONTACT: Mike Kiesov, Aerospace Engineer, FAA, Small Airplane Directorate, 901 Locust, Room 301, Kansas City, Missouri 64106; telephone: (816) 329–4144; facsimile: (816) 329–4090.

SUPPLEMENTARY INFORMATION:

Comments Invited

How do I comment on this proposed AD? We invite your comments on the proposed rule. You may send whatever written data, views, or arguments you choose. You need to include the rule's docket number and send your comments in triplicate to the address specified under the caption **ADDRESSES.** We will consider all comments received by the closing date specified above, before acting on the proposed rule. We may change the proposals contained in this notice because of the comments received.

Are there any specific portions of the proposed AD I should pay attention to? The FAA specifically invites comments on the overall regulatory, economic, environmental, and energy aspects of the proposed rule that might require a change to the proposed rule. You may read all comments we receive. We will file a report in the Rules Docket that summarizes each FAA contact with the public that concerns the substantive parts of this proposal.

The FAA is reviewing the writing style we currently use in regulatory documents, in response to the Presidential memorandum of June 1, 1998. That memorandum requires federal agencies to communicate more clearly with the public. We want to read your comments on the ease of understanding this document, and any other suggestions you might have to improve the clarity of FAA communications that affect you. You can get more information about the Presidential memorandum and the plain language initiative at http://www.faa.gov/language/.

How can I be sure FAA receives my comment? If you want us to acknowledge the receipt of your comments, you must include a self-addressed, stamped postcard. On the postcard, write ''Comments to Docket No. 2000–CE–49–AD.'' We will date stamp and mail the postcard back to you.

Discussion

What events have caused this proposed AD? The Direction Gonorale de l'Aviation Civile (DGAC), which is the airworthiness authority for France, recently told the FAA that an unsafe condition may exist on certain S.N. CENTRAIR 101 series gliders. The DGAC reports that a failure analysis of the welded parts of airbrake arms revealed that cracks could occur in these parts.

What happens if you do not correct the condition? This condition, if not corrected, could result in undetected cracks. Consequently, a crack in the airbrake control system could prevent the pilot from using the airbrake system.

Relevant Service Information

Is there service information that applies to this subject? S.N. CENTRAIR has issued Service Bulletin No. 101–16, Revision 3, dated February 2, 1999.

What are the provisions of this service bulletin? The service bulletin describes procedures for:

—Inspecting the airbrake control system for cracks; and

—Replacing the airbrake control system.

What actions did the French take? The DGAC issued French AD Number 1995–261(A) R3, dated January 26, 2000, to assure the continued airworthiness of these gliders in France.

Was this in accordance with the bilateral airworthiness agreement? S.N. CENTRAIR manufactured this glider model in France. The FAA type certificated the glider model for operation in the United States under § 21.29 of the Federal Aviation Regulations (14 CFR 21.29) and the applicable bilateral airworthiness agreement. Complying with this bilateral airworthiness agreement, the DGAC kept FAA informed about the failure analysis.

The FAA's Determination and an Explanation of the Provisions of the Proposed AD

What has FAA decided? The FAA has examined the findings of the DGAC; reviewed all available information, including the service information referenced above; and determined that:

—The unsafe condition referenced in this document exists or could develop on other S.N. CENTRAIR 101 series gliders of the same type design;
—These gliders should have the actions specified in the above service bulletin incorporated; and
—The FAA should take AD action to correct this unsafe condition.

What does this proposed AD require? This proposed AD requires you to:

—Inspect the airbrake control system for cracks; and
—If cracks are detected, replace the airbrake control system.

What are the differences between the French AD and the proposed AD? The French AD requires inspection before the next flight. The FAA requires inspection within 60 days after the effective date of the AD. Also, the French require replacement of the applicable parts; FAA requires replacement only if you find cracks during the inspection. The proposed AD requires a repetitive inspection during each 12 calendar months inspection. You may stop this repetitive inspection requirement if the part is replaced.

Why is the compliance time in calendar time? The compliance time of the proposed AD is in calendar time instead of hours time-in-service (TIS). The average monthly use of the affected sailplanes ranges throughout the fleet. For example, one owner may operate the sailplane 25 hours TIS in one week, while another operator may operate the sailplane 25 hours TIS in one year. In order to ensure that all of the owners/operators of the affected sailplane have inspected the airbrake control system within a reasonable amount of time, the FAA is proposing a compliance time of 60 calendar days after the effective date of this AD.

Cost Impact

This proposed AD impacts how many gliders? We estimate the proposed AD would affect 41 gliders in the U.S. registry.

What is the cost impact of the proposed inspection for the affected gliders on the U.S. Register? We estimate that it would take about 2 workhours for each glider to do the proposed inspection, at an average labor rate of $60 an hour. Based on the cost factors presented above, we estimate the total cost impact of the proposed inspection on U.S. operators to be $4,920, or $120 for each glider.

We estimate that it would take about 4 workhours to do the proposed replacement of a cracked part, at an average labor rate of $60 an hour. We estimate the replacement parts cost is about $100. Based on the cost factors presented above, we estimate the total cost impact of the proposed replacement on U.S. operators to be $340 for each glider.

Regulatory Impact

Does this proposed AD impact relations between Federal and State governments? The proposed regulations would not have substantial direct effects on the States, on the relationship between the national government and the States, or on the distribution of power and responsibilities among the various levels of government. We have determined that this proposed rule would not have federalism implications under Executive Order 13132.

Does this proposed AD involve a significant rule or regulatory action? For the reasons discussed above, I certify that this action (1) is not a ''significant regulatory action'' under Executive Order 12866; (2) is not a ''significant rule'' under Department of Transportation Regulatory Policies and Procedures (44 FR 11034, February 26, 1979); and (3) if put into effect, will not have a significant economic impact, positive or negative, on a substantial number of small entities under the criteria of the Regulatory Flexibility Act. We have placed a copy of the draft regulatory evaluation prepared for this action in the Rules Docket. You may get a copy of it by contacting the Rules Docket at the location provided under the caption **ADDRESSES.**

List of Subjects in 14 CFR Part 39

Air transportation, Aircraft, Aviation safety, Safety.

The Proposed Amendment

Therefore, under the authority delegated to me by the Administrator, the Federal Aviation Administration proposes to amend part 39 of the Federal Aviation Regulations (14 CFR part 39) as follows:

PART 39—AIRWORTHINESS DIRECTIVES

1. The authority citation for part 39 continues to read as follows:

Authority: 49 U.S.C. 106(g), 40113, 44701.

§ 39.13 [Amended]

2. FAA amends § 39.13 by adding a new airworthiness directive (AD) to read as follows:

S.N. Centrair: Docket No. 2000–CE–49–AD.

(a) *What gliders are affected by this AD?* Models 101, 101A, 101P, and 101AP gliders, all serial numbers up to but not including 101A0628, certificated in any category.

(b) *Who must comply with this AD?* Anyone who wishes to operate any of the above gliders on the U.S. Register must comply with this AD.

(c) *What problem does this AD address?* Our intent is the actions specified in the AD detect cracks in the airbrake control system and replace cracked parts with parts of improved design.

(d) *What must I do to address this problem?* To address this problem, you must do the following actions:

Actions	Compliance times	Procedures
(1) Inspect the airbrake ctronol system for cracks.	Within the next 60 calendar days after the effective date of the AD and then every 12 calendar months inspection.	Do this action following S.N. Centrair Service Bulletin No. 101–16, Revision 3, dated February 2, 1999.
(2) If you detect cracks, replace the airbrake control system.	Before further flight after the inspection	Do this action following the S.N. Centrair maintenance manual.

Actions	Compliance times	Procedures
(i) For sailplanes equipped with manual aileron and airbrake control systems, install S.N. Centrair part number (P/N) $YO57D or an FAA-approved equivalent part number.		
(ii) For sailplanes equipped with an automatic aileron and airbrake control system, install S.N. Centrair P/N $Y818E or an FAA-approved equivalent part number.		
(3) You may stop the repetitive inspection requirement of this AD by replacing the air brake control system with the applicable part referenced in this AD.	(i) Before further flight if found cracked as required by paragraph (d)(1) of this AD; or. (ii) At any time if the part is not cracked	Not applicable.
(4) You may not install any airbrake control system that is not of the applicable part numbers referenced in paragraphs (d)(2)(i) and (d)(2)(ii) of this AD.	As of the effective date of this AD	Not applicable.

(e) *Can I comply with this AD in any other way?* You may use an alternative method of compliance or adjust the compliance time if:

(1) Your alternative method of compliance provides an equivalent level of safety; and

(2) The Manager, Small Airplane Directorate approves your alternative. Send your request through an FAA Principal Maintenance Inspector, who may add comments and then send it to the Manager, Small Airplane Directorate, 901 Locust, Room 301, Kansas City, Missouri 64106.

Note 1: This AD applies to each glider identified in paragraph (a) of this AD, regardless of whether it has been modified, altered, or repaired in the area subject to the requirements of this AD. For gliders that have been modified, altered, or repaired so the performance of the requirements of this AD is affected, the owner/operator must request approval for an alternative method of compliance in accordance with paragraph (e) of this AD. You should include in the request an assessment of the effect of the modification, alteration, or repair on the unsafe condition addressed by this AD; and, if you have not eliminated the unsafe condition, specific actions you propose to address it.

(f) *Where can I get information about any already-approved alternative methods of compliance?* You can contact Mike Kiesov, Aerospace Engineer, FAA, Small Airplane Directorate, 901 Locust, Room 301, Kansas City, Missouri 64106; telephone: (816) 329–4144; facsimile: (816) 329–4090.

(g) *What if I need to fly the glider to another location to comply with this AD?* The FAA can issue a special flight permit under sections 21.197 and 21.199 of the Federal Aviation Regulations (14 CFR 21.197 and 21.199) to operate your glider to a location where you can carry out the requirements of this AD.

(h) *How do I get copies of the documents referenced in this AD?* You may get copies of the documents referenced in this AD from S.N. Centrair, Aerodome—36300 Le Blanc, France; telephone: 02.54.37.07.96; facsimile: 02.54.37.48.64. You may read these documents at FAA, Central Region, Office of the Regional Counsel, 901 Locust, Room 506, Kansas City, Missouri 64106.

Note 2: French AD 1995–261(A) R3, dated January 26, 2000, addresses this subject.

Issued in Kansas City, Missouri, on September 7, 2000.

Michael Gallagher,

Manager, Small Airplane Directorate, Aircraft Certification Service.

[FR Doc. 00–23576 Filed 9–13–00; 8:45 am]

BILLING CODE 4910–13–P

DEPARTMENT OF TRANSPORTATION

Federal Aviation Administration

14 CFR Part 39

[Docket No. 98–ANE–68–AD]

Airworthiness Directives; Rolls-Royce, plc Tay 650–15 and 651–54 Turbofan Engines

AGENCY: Federal Aviation Administration, DOT.

ACTION: Notice of proposed rulemaking (NPRM).

SUMMARY: This document proposes the adoption of a new airworthiness directive (AD) that is applicable to Rolls-Royce, plc Tay 650–15 and 651–54 turbofan engines. This proposal would require initial and repetitive visual and ultrasonic inspections of fan blades for cracks, and, if necessary, replacement with serviceable parts. In addition, this AD requires recording instances when engines are operated in a stabilized manner in newly prohibited ranges. This proposal is prompted by reports of fan blade failures. The actions specified by the proposed AD are intended to prevent fan blade failures, which can result in an uncontained engine failure, engine fire, and damage to the airplane.

DATES: Comments must be received by November 13, 2000.

ADDRESSES: Submit comments to the Federal Aviation Administration (FAA), New England Region, Office of the Regional Counsel, Attention: Rules Docket No. 98–ANE–68–AD, 12 New England Executive Park, Burlington, MA 01803–5299. Comments may also be sent via the Internet using the following address: ''9-ane-adcomment@faa.gov''. Comments sent via the Internet must contain the docket number in the subject line. Comments may be inspected at this location between 8:00 a.m. and 4:30 p.m., Monday through Friday, except Federal holidays.

The service information referenced in the proposed rule may be obtained from Rolls-Royce plc, Technical Publications Department, PO Box 31, Derby, England DE24 8BJ; telephone 44 1332 242424, fax 44 1332 249936. This information may be examined at the FAA, New England Region, Office of the Regional Counsel, 12 New England Executive Park, Burlington, MA.

FOR FURTHER INFORMATION CONTACT: Richard Woldan, Aerospace Engineer, Engine Certification Office, FAA, Engine and Propeller Directorate, 12 New England Executive Park, Burlington, MA 01803–5299; telephone (781) 238–7136, fax (781) 238–7199.

SUPPLEMENTARY INFORMATION:

Comments Invited

Interested persons are invited to participate in the making of the proposed rule by submitting such written data, views, or arguments as they may desire. Communications should identify the Rules Docket number and be submitted to the address specified above. All communications received on or before the closing date for comments, specified above, will be considered before taking action on the proposed rule. The proposals contained

in this notice may be changed in light of the comments received.

Comments are specifically invited on the overall regulatory, economic, environmental, and energy aspects of the proposed rule. All comments submitted will be available, both before and after the closing date for comments, in the Rules Docket for examination by interested persons. A report summarizing each FAA-public contact concerned with the substance of this proposal will be filed in the Rules Docket.

Commenters wishing the FAA to acknowledge receipt of their comments submitted in response to this notice must submit a self-addressed, stamped postcard on which the following statement is made: ''Comments to Docket Number 98–ANE–68–AD.'' The postcard will be date stamped and returned to the commenter.

Availability of NPRM's

Any person may obtain a copy of this NPRM by submitting a request to the FAA, New England Region, Office of the Regional Counsel, Attention: Rules Docket No. 98–ANE–68–AD, 12 New England Executive Park, Burlington, MA 01803–5299.

Discussion

The Civil Aviation Authority (CAA), which is the airworthiness authority for the United Kingdom (UK), recently notified the Federal Aviation Administration (FAA) that an unsafe condition may exist on Rolls-Royce, plc (R–R) Tay 650–15 and 651–54 turbofan engines. The CAA advises that they have received a report of failure of five fan blades in the root section during takeoff which resulted in fan case punctures, severing of the low pressure (LP) fuel line and an extensive engine fire. Investigation revealed that fatigue cracks initiated in the fan blade root section due to fan resonance or flutter caused by the engine operating in a stabilized manner between idle reverse and emergency maximum reverse thrust (Tay 650–15) or maximum reverse thrust (Tay 651–54). The aircraft flight manuals have already been revised to prohibit operating in a stabilized manner within these ranges. However, inadvertent stabilized operations in the prohibited ranges could result in fan blade failure. This condition, if not corrected, could result in fan blade failure, which can result in an uncontained engine failure, engine fire, and damage to the aircraft.

Service Bulletins (SBs)

R–R has issued Service Bulletin (SB) No. Tay 72–1447, Revision 2, dated July 25, 2000, that specifies procedures for recording engine operation within the newly prohibited ranges, and SB No. Tay 72–1442, Revision 1, dated December 19, 1997, that describes procedures for inspection of fan blades. The CAA classified these SB's as mandatory in order to assure the airworthiness of these engines in the UK.

Bilateral Airworthiness Agreement

This engine model is manufactured in the UK and is type certificated for operation in the United States under the provisions of Section 21.29 of the Federal Aviation Regulations (14 CFR 21.29) and the applicable bilateral airworthiness agreement. Pursuant to this bilateral airworthiness agreement, the CAA has kept the FAA informed of the situation described above. The FAA has examined the findings of the CAA, reviewed all available information, and determined that AD action is necessary for products of this type design that are certificated for operation in the United States.

Proposed Actions

Since an unsafe condition has been identified that is likely to exist or develop on other engines of the same type design registered in the United States, the proposed AD would require initial and repetitive visual and ultrasonic inspections of fan blades for cracks, and, if necessary, replacement with serviceable parts. In addition, this AD would require recording instances when engines are operated in a stabilized manner in newly prohibited ranges. The actions would be required to be accomplished in accordance with the SB's described previously.

Economic Analysis

There are approximately 713 engines of the affected design in the worldwide fleet. The FAA estimates that 451 engines installed on airplanes of US registry would be affected by this proposed AD. Based on the current utilization and shop visit rates for the affected engine models, the FAA estimates that the number of shop visits and inspections for the US fleet would be approximately 140 per year. It would take approximately 5 work hours per engine to accomplish the proposed actions at a labor rate of $60 per work hour. Assuming that five percent of these inspections result in a rejected fan blade set at a cost of approximately $100,000 per set, the annual cost impact of the proposed AD on US operators is estimated to be $742,000. The current inspection failure rate is below one percent and this cost estimate is believed to be conservatively high.

Regulatory Impact

This proposed rule does not have federalism implications, as defined in Executive Order 13132, because it would not have a substantial direct effect on the States, on the relationship between the national government and the States, or on the distribution of power and responsibilities among the various levels of government. Accordingly, the FAA has not consulted with state authorities prior to publication of this proposed rule.

For the reasons discussed above, I certify that this proposed regulation (1) is not a ''significant regulatory action'' under Executive Order 12866; (2) is not a ''significant rule'' under the DOT Regulatory Policies and Procedures (44 FR 11034, February 26, 1979); and (3) if promulgated, will not have a significant economic impact, positive or negative, on a substantial number of small entities under the criteria of the Regulatory Flexibility Act. A copy of the draft regulatory evaluation prepared for this action is contained in the Rules Docket. A copy of it may be obtained by contacting the Rules Docket at the location provided under the caption **ADDRESSES.**

List of Subjects in 14 CFR Part 39

Air transportation, Aircraft, Aviation safety, Safety.

The Proposed Amendment

Accordingly, pursuant to the authority delegated to me by the Administrator, the Federal Aviation Administration proposes to amend part 39 of the Federal Aviation Regulations (14 CFR part 39) as follows:

PART 39—AIRWORTHINESS DIRECTIVES

1. The authority citation for part 39 continues to read as follows:

Authority: 49 U.S.C. 106(g), 40113, 44701.

§ 39.13 [Amended]

2. Section 39.13 is amended by adding the following new airworthiness directive:

Rolls-Royce, plc: Docket No. 98–ANE–68–AD.

Applicability: Rolls-Royce, plc (R–R) Tay 650–15 and 651–54 turbofan engines, installed on but not limited to Fokker Model F.28 Mark 0100 and Boeing 727–QF series airplanes.

Note 1: This airworthiness directive (AD) applies to each engine identified in the preceding applicability provision, regardless of whether it has been modified, altered, or repaired in the area subject to the

requirements of this AD. For engines that have been modified, altered, or repaired so that the performance of the requirements of this AD is affected, the owner/operator must request approval for an alternative method of compliance in accordance with paragraph (d) of this AD. The request should include an assessment of the effect of the modification, alteration, or repair on the unsafe condition addressed by this AD; and, if the unsafe condition has not been eliminated, the request should include specific proposed actions to address it.

Compliance: Required as indicated, unless accomplished previously.

To prevent fan blade failure, which can result in an uncontained engine failure, engine fire, and damage to the aircraft, accomplish the following:

Record Operation in Prohibited Operating Ranges

(a) If an engine is operated in a stabilized manner within the prohibited ranges described in R–R Service Bulletin (SB) No. Tay 72–1447, Revision 2, dated July 25, 2000, paragraphs 3.A ., 3.B.(2), or 3.C. as applicable by engine model, then prior to the next flight make an entry in the engine records that reflects that operation. If known, include the stabilized N1 speed in the engine records.

Inspections

(b) Perform initial and repetitive inspections of fan blades in accordance with paragraphs 1. D. (1) through (7) of R–R SB No. Tay 72–1442, Revision 1, dated December 19, 1997, as follows:

(1) Perform the initial inspection at the earliest of the following:

(i) If the engine records indicate that any of the conditions described in R–R SB No. Tay 72–1447, Revision 2, dated July 25, 2000, paragraphs 3.A.(2), 3.A.(3), 3.B.(2)(a), 3.B.(2)(b), or 3.C.(2), as applicable by engine model, are satisfied;

(ii) Prior to entering in service if fan blades are installed in a different engine than that from which they were removed and if the fan blades have time-in-service since the last inspection in accordance with R–R SB No. Tay 72–1442;

(iii) The next shop visit after the effective date of this AD, defined as the introduction of the engine into a shop that can perform the inspection defined in Appendix 1 of R–R SB No. Tay 72–1442, Revision 1, dated December 19, 1997.

(2) Thereafter, inspect at intervals not to exceed the earliest of paragraphs (b)(1)(i) through (b)(1)(iii) of this AD.

(c) Remove the entire fan blade set from service if any blade shows crack indications and replace with serviceable parts.

Alternative Methods of Compliance

(d) An alternative method of compliance or adjustment of the compliance time that provides an acceptable level of safety may be used if approved by the Manager, Engine Certification Office. Operators shall submit their request through an appropriate FAA Principal Maintenance Inspector, who may add comments and then send it to the Manager, Engine Certification Office.

Note 2: Information concerning the existence of approved alternative methods of compliance with this airworthiness directive, if any, may be obtained from the Engine Certification Office.

Special Flight Permits

(e) Special flight permits may be issued in accordance with sections 21.197 and 21.199 of the Federal Aviation Regulations (14 CFR 21.197 and 21.199) to operate the aircraft to a location where the inspection requirements of this AD can be accomplished.

Issued in Burlington, Massachusetts, on September 4, 2000.

David A. Downey,

Assistant Manager, Engine and Propeller Directorate, Aircraft Certification Service.

[FR Doc. 00–23585 Filed 9–13–00; 8:45 am]

BILLING CODE 4910–13–U

DEPARTMENT OF TRANSPORTATION

Federal Aviation Administration

14 CFR Part 39

[Docket No. 99–CE–04–AD]

RIN 2120–AA64

Airworthiness Directives; Fairchild Aircraft, Inc. SA226–T, SA226–T(B), SA226–AT, and SA226–TC Airplanes

AGENCY: Federal Aviation Administration, DOT.

ACTION: Proposed rule; Withdrawal.

SUMMARY: This document withdraws a notice of proposed rulemaking (NPRM) that would have applied to certain Fairchild Aircraft, Inc. (Fairchild) Models SA226–T, SA226–T(B), SA226–AT, and SA226–TC airplanes. The proposed airworthiness directive (AD) would have required you to replace the existing brake master cylinders with brake master cylinders of improved design. The proposed AD was the result of an accident of a Model SA226–TC airplane where it was believed that the master cylinder did not allow the brake hydraulic pressure to totally release at the beginning of the takeoff roll. The result of this incident was dragging brakes and overheating left-hand main wheel brakes with a fire in the wheel well area. Fairchild has adequately demonstrated to the Federal Aviation Administration (FAA) that the design of the brake master cylinder on the affected airplanes was not the cause of the referenced accident. Therefore, AD action is not necessary to address the conditions on these airplanes and we are withdrawing the NPRM.

ADDRESSES: You may look at information related to this action at FAA, Central Region, Office of the Regional Counsel, Attention: Rules Docket No. 99–CE–04–AD, 901 Locust, Room 506, Kansas City, Missouri 64106, between 8 a.m. and 4 p.m., Monday through Friday, except holidays.

FOR FURTHER INFORMATION CONTACT: Werner Koch, FAA, Airplane Certification Office, 2601 Meacham Boulevard, Fort Worth, Texas 76193–0150; telephone: (817) 222–5133; facsimile: (817) 222–5960.

SUPPLEMENTARY INFORMATION:

Discussion

What action has FAA taken to date? We issued a proposal to amend part 39 of the Federal Aviation Regulations (14 CFR part 39) to include an AD that would apply to certain Fairchild Models SA226–T, SA226–T(B), SA226–AT, and SA226–TC airplanes. The proposal was published in the **Federal Register** as an NPRM on February 18, 1999 (64 FR 8022). The NPRM proposed to require you to replace the existing brake master cylinders with brake master cylinders of improved design.

Was the public invited to comment? The FAA invited interested persons to participate in the making of this amendment. We received one comment on the proposed AD. Our analysis and disposition of this comment follow:

Comment Disposition

What is the commenter's concern? Fairchild submits data that it believes shows that the design of the brake master cylinder on the affected airplanes was not the cause of the referenced accident. Therefore, Fairchild states that FAA should withdraw the NPRM because the proposed actions do not address the condition described in the NPRM.

What is FAA's response to the concern? After reviewing this data, we have determined that Fairchild has adequately demonstrated that the design of the brake master cylinder on the affected airplanes was not the cause of the referenced accident. We will withdraw the NPRM per Fairchild's request.

The FAA's Determination

What is FAA's final determination on this issue? Based on the above information, we have determined that there is no need for the actions specified in NPRM, Docket No. 99–CE–04–AD, and that we should withdraw it.

Withdrawal of this NPRM does not prevent us from issuing another notice in the future, nor will it commit us to any course of action in the future.

Regulatory Impact

Does this AD involve a significant rule or regulatory action? Since this action only withdraws a proposed AD, it is not

an AD and, therefore, is not covered under Executive Order 12866, the Regulatory Flexibility Act, or DOT Regulatory Policies and Procedures (44 FR 11034, February 26, 1979).

List of Subjects in 14 CFR Part 39

Air transportation, Aircraft, Aviation safety, Safety.

The Withdrawal

Accordingly, FAA withdraws the notice of proposed rulemaking, Docket No. 99–CE–04–AD, which was published in the **Federal Register** on February 18, 1999 (64 FR 8022).

Issued in Kansas City, Missouri, on September 7, 2000.

Michael Gallagher,

Manager, Small Airplane Directorate, Aircraft Certification Service.

[FR Doc. 00–23586 Filed 9–13–00; 8:45 am]

BILLING CODE 4910–13–U

DEPARTMENT OF THE INTERIOR

Bureau of Indian Affairs

25 CFR Part 292

RIN 1076–AD93

Gaming on Trust Lands Acquired After October 17, 1988

AGENCY: Bureau of Indian Affairs, Interior.

ACTION: Proposed rule.

SUMMARY: This proposed rule establishes procedures that an Indian tribe must follow in seeking a Secretarial determination that a gaming establishment would be in the best interest of the Indian tribe and its members, and would not be detrimental to the surrounding community. The law requires Indian tribes to seek this determination if the gaming establishment will be located on land acquired in trust after October 17, 1988, unless the land is covered under another statutory exemption.

DATES: Comments must be received on or before November 13, 2000.

ADDRESSES: If you wish to comment, you may submit your comments by any one of several methods. See **SUPPLEMENTARY INFORMATION** section.

FOR FURTHER INFORMATION CONTACT: George Skibine, Director, Office of Indian Gaming Management, Bureau of Indian Affairs, 1849 C Street NW, MS–2070 MIB, Washington, DC 20240; by telephone at (202) 219–4066; or by telefax at (202) 273–3153.

SUPPLEMENTARY INFORMATION:

General Comments

You may mail comments to the Office of Indian Gaming Management, Bureau of Indian Affairs, 1849 C Street, NW, MS–2070 MIB, Washington, DC 20240.

Electronic Access and Filing

You may also comment via the Internet to [gamingcomments@BIA.GOV]. Please submit Internet comments as an ASCII file avoiding the use of special characters and any form of encryption. Please also include ''Attn: 1076–AD93'' and your name and return address in your Internet message. If you do not receive a confirmation from the system that we have received your Internet message, contact the Office of Indian Gaming Management directly at (202) 219–4066.

Finally, you may hand-deliver comments to the Office of Indian Gaming Management, Bureau of Indian Affairs, 1849 C Street NW, MS–2070 MIB, Washington, DC 20240.

Our practice is to make comments, including names and home addresses of respondents, available for public review during regular business hours. Individual respondents may request that we withhold their home address from the rulemaking record, which we will honor to the extent allowable by law. There also may be circumstances in which we would withhold from the rulemaking record a respondent's identity, as allowable by law. If you wish us to withhold your name and/or address, you must state this prominently at the beginning of your comments. However, we will not consider anonymous comments. We will make all submissions from organizations or businesses, and from individuals identifying themselves as representatives or officials of organizations or businesses, available for public inspection in their entirety.

Background

The Indian Gaming Regulatory Act (IGRA), 25 U.S.C. 2701–2721, was signed into law on October 17, 1988. Section 20 of IGRA, 25 U.S.C. 2719, contains specific provisions for lands that the Secretary of the Interior acquired in trust for an Indian tribe after October 17, 1988. The section says that Indian tribes cannot conduct class II and class III gaming on these lands acquired in trust, unless one of several exceptions applies. If none of the exceptions in section 20 applies, section 20(b)(1)(A) of IGRA provides that gaming can still occur on the lands if:

(1) The Secretary consults with the Indian tribe and appropriate State and local officials, including officials of other nearby tribes;

(2) After consultation, the Secretary determines that a gaming establishment on newly acquired (trust) lands would be in the best interest of the Indian tribe and its members, and would not be detrimental to the surrounding community; and

(3) The Governor of the State in which the gaming activity is to be conducted concurs in the Secretary's determination.

This proposed rule establishes a process for submitting and considering applications from Indian tribes seeking a Secretarial determination under section 20(b)(1)(A) of IGRA. The Bureau of Indian Affairs (BIA) issued a revised checklist for Secretarial determinations under this section on February 21, 1997. The proposed rule:

(1) Adopts the standards in the revised checklist, in modified form.

(2) Contains a process for BIA Central Office review of a tribal application for a Secretarial determination.

(3) Clarifies what consultation process the Department must follow when making a determination, and who must be consulted.

Since IGRA was enacted, only two tribes have successfully qualified to operate a gaming establishment on trust land under the exception to the gaming prohibition in section 20(b)(1)(A) of IGRA.

The proposed rule does not cover determinations of whether gaming on a specific parcel of land is exempt from the section 20 prohibition on gaming on after-acquired lands under any of the other exceptions contained in section 20 of IGRA. Tribal requests for such determinations will continue to be processed by BIA on a case-by-case basis.

Clarity of This Regulation

Executive Order 12866 requires each agency to write regulations that are easy to understand. We invite your comments on how to make this rule easier to understand, including answers to questions such as the following:

(1) Are the requirements in the rule clearly stated?

(2) Does the rule contain technical language or jargon that interferes with its clarity?

(3) Does the format of the rule (grouping and order of sections, use of headings, paragraphing, etc.) aid or reduce its clarity?

(4) Would the rule be easier to understand if it were divided into more (but shorter) sections? (A ''section'' appears in bold type and is preceded by the symbol ''§ '' and a numbered

heading; for example, § 292.4 What are the exceptions to the prohibition on gaming on trust lands acquired after October 17, 1988)

(5) Is the description of the rule in the **SUPPLEMENTARY INFORMATION** section of the preamble helpful in understanding the proposed rule? What else could we do to make the rule easier to understand?

Regulatory Planning and Review (E.O. 12866)

In accordance with the criteria in Executive Order 12866, this rule is not a significant regulatory action and is not subject to review by the Office of Management and Budget (OMB).

This rule will not have an economic effect of $100 million or adversely affect an economic sector, productivity, jobs, the environment, public health or safety, or State, local or tribal governments or communities. The annual number of requests for two-part Secretarial determinations under section 20 (b)(1)(A) of IGRA has been small. Since IGRA was enacted, only two tribes have successfully qualified to operate a gaming establishment on trust land under the exception to the gaming prohibition in section 20 (b)(1)(A) of IGRA. This rule will not create serious inconsistencies or otherwise interfere with an action taken or planned by another Federal agency. The Department of the Interior (DOI), BIA is the only governmental agency that makes the determination whether to take land into trust for Indian tribes.

This rule will not materially affect entitlements, grants, user fees, loan programs, or the rights and obligations of their recipients. This rule sets out the procedures for the submission of an application from an Indian tribe seeking a Secretarial determination that a gaming establishment on land acquired in trust after October 17, 1988, and not coming under one of the other statutory exemptions to the prohibition on gaming contained in section 20 of IGRA, would be in the best interest of the Indian tribe and its members, and would not be detrimental to the surrounding community.

This rule will not raise novel legal or policy issues. This rule is of an administrative, technical and procedural nature.

Regulatory Flexibility Act

This document will not have a significant economic effect on a substantial number of small entities under the Regulatory Flexibility Act, 5 U.S.C. 601 *et seq.* Indian tribes are not considered to be small entities for purposes of this Act.

Small Business Regulatory Enforcement Fairness Act (SBREFA)

This rule is not a major rule under 5 U.S.C. 804(2), the Small Business Regulatory Enforcement Fairness Act. This rule does not have an annual effect on the economy of $100 million or more because it is expected that the number of requests will be small. This rule will not cause a major increase in costs or prices for consumers, individual industries, Federal, State or local government agencies or geographic regions and does not have significant adverse effects on competition, employment, investment, productivity, innovation, or the ability to U.S.-based enterprises to compete with foreign-based enterprises.

Unfunded Mandates Act of 1995

In accordance with the Unfunded Mandates Reform Act (2 U.S.C. 1531 *et seq.*):

The rule will not significantly or uniquely affect small governments, or the private sector. A Small Government Agency Plan is not required. Additional expenses may be incurred by the requesting tribe to provide information to the Secretary. See OMB 83–I, 15a.

This rule will not produce a Federal mandate of $100 million or greater in any year. The overall effect of this rule will be negligible to the State, local or tribal government or the private sector.

Takings (E.O. 12630)

In accordance with Executive Order 12630 this rule does not have significant ''takings'' implications. A takings implication assessment is not required because actions under this rule do not constitute a taking.

Federalism (E.O. 13132)

In accordance with Executive Order 13132 this proposed rule does not have significant Federalism effects to warrant the preparation of a Federalism Assessment. However, this rule should not affect the relationship between State and Federal governments because actions in this rule apply only to a relatively small amount of land.

Civil Justice Reform (E.O. 12988)

In accordance with Executive Order 12988, the Office of the Solicitor has determined that this rule does not unduly burden the judicial system and meets the requirements of sections 3(a) and 3(b)(2) of the Order. This rule contains no drafting errors or ambiguity and is written to minimize litigation, provides clear standards, simplifies procedures, reduces burden, and is clearly written. These regulations do not preempt any statute.

Paperwork Reduction Act of 1995

As required by the Paperwork Reduction Act of 1995 (44 U.S.C. 3507(d)), the Department has submitted an information collection and a copy of the proposed rule to OMB for review. The collection of information is unique for each tribe even though each submission addresses the requirements found in §§ 292.8, 292.9, 292.10, 292.11, 292.13, 292.14, 292.17 and 292.18.

All information is collected in the tribe's application. Respondents submit information in order to obtain a benefit. Each response is estimated to take 1,000 hours to review instructions, search existing data sources, gather and maintain necessary data, and prepare in format for submission. We anticipate that two responses will be submitted annually for an annual burden of 2,000 hours.

Submit comments on the proposed information collection to the Attention: Desk Officer for the Department of the Interior, Office of Information and Regulatory Affairs, OMB, Room 10202, New Executive Office Building, Washington, DC 20503. You should also send comments to the BIA official as found in the **ADDRESSES** section. The BIA solicits comments in order to:

(1) Evaluate whether the proposed collection of information is necessary for the proper performance of the functions of the BIA, including whether the information will have practical utility;

(2) Evaluating the BIA's estimate of the burden of the proposed collection of information, including the validity of the methodology and assumptions used;

(3) Enhancing the quality, utility, and clarity of the information to be collected; and

(4) Minimize the burden of the collection of information on those who are to respond.

OMB is required to make a decision between 30 and 60 days after publication of this document in the **Federal Register**. Therefore, your comment to OMB has the best chance of being considered if OMB receives it within 30 days of publication. This does not affect the deadline for the public to comment to BIA on the proposed rule.

National Environmental Policy Act of 1969 (NEPA) Statement

This proposed rule does not constitute a major Federal action significantly affecting the quality of the human environment and no detailed statement is required pursuant to NEPA because this rule is of an administrative, technical and procedural nature.

Government-to-Government Relationship With Tribes

In accordance with Executive Order 13084, issued on May 14, 1998, and 512 DM 2, we have evaluated the potential effects upon federally recognized Indian tribes and have determined that this proposed rule does not significantly or uniquely affect the communities of Indian tribal governments. No action is taken under this rule unless a tribe requests a determination that a gaming establishment on existing or proposed trust land is in the best interest of the tribe and its members and not detrimental to the surrounding community.

Drafting Information: The primary author of this document is George Skibine, Director, Office of Indian Gaming Management, Bureau of Indian Affairs, Department of the Interior.

List of Subjects in 25 CFR Part 292

Indians—gaming, Indians—lands.

For the reasons given in the preamble, part 292 is proposed to be added to Chapter I of Title 25 of the Code of Federal Regulations as follows:

PART 292—GAMING ON TRUST LANDS ACQUIRED AFTER OCTOBER 17, 1988

Sec.

292.1 What is the purpose of this part?
292.2 How are key terms defined in this part?
292.3 When can a tribe conduct gaming activities on trust lands acquired after October 17, 1988?
292.4 What criteria must trust land meet for gaming to be allowed?
292.5 Can a tribe conduct gaming activities on lands acquired in trust after October 17, 1988 if the land does not qualify under one of the exceptions?
292.6 Where must a tribe file an application for a Secretarial determination?
292.7 May a tribe request a Secretarial determination for lands not yet held in trust?
292.8 What must an application for a Secretarial determination contain?
292.9 What information must an application contain on the benefits of a proposed gaming activity?
292.10 What information must an application contain on the effects of a proposed gaming activity?
292.11 What additional documents must an application contain?
292.12 What must the Regional Director do upon receiving the application?
292.13 How will the Regional Director conduct the consultation process?
292.14 What criteria must the consultation letter meet?
292.15 What must the Regional Director do at the expiration of the comment period?
292.16 What must the ADO do upon receiving the Regional Director's recommendation?
292.17 If the ADO finds deficiencies, what must the Regional Director and the applicant tribe do?
292.18 What must the ADO do after receiving an adequate recommendation?
292.19 How does the ADO request the Governor's concurrence?
292.20 Do information collections under this part have Office of Management and Budget approval?

Authority: 5 U.S.C. 301, 25 U.S.C. 2, 9, and 2719.

§ 292.1 What is the purpose of this part?

This part contains procedures that the Department of the Interior will use to determine whether class II or class III gaming can occur on land acquired in trust for a tribe after October 17, 1988.

§ 292.2 How are key terms defined in this part?

All terms have the same meaning as set forth in the definitional section of the Indian Gaming Regulatory Act (IGRA), 25 U.S.C. 2703(1)–(10). In addition, the following terms have the meanings given in this section.

Appropriate Departmental Official (ADO) means the Department of Interior official with delegated authority to make a two-part Secretarial determination that a gaming establishment would be in the best interest of the Indian tribe and its members, and would not be detrimental to the surrounding community.

Appropriate State and Local Officials means the Governor of the State, and appropriate officials of units of local government within 10 miles of the site of the proposed gaming establishment.

BIA means Bureau of Indian Affairs.

Contiguous means land(s) sharing a common boundary, touching, next to or adjoining with nothing intervening. However, parcels of land are contiguous even if separated by roads, railroads, or other rights of way, or streams.

Day means calendar day.

Former reservation means lands that are within the jurisdictional area of an Oklahoma Indian tribe, and that are within the boundaries of the last reservation for that tribe established by treaty, Executive Orders, or Secretarial Orders.

IGRA means the Indian Gaming Regulatory Act of 1988, 25 U.S.C. 2701–2721.

Nearby Indian tribe means an Indian tribe with Indian lands, as defined in 25 U.S.C. 2703(4) of IGRA, located within a 50 mile radius of the location of the proposed gaming establishment.

Regional Director means the official in charge of the BIA Regional Office responsible for all BIA activities within the geographical area where the proposed gaming establishment is to be located.

Reservation means that area of land which has been set aside or which has been acknowledged as having been set aside by the United States for the use of the tribe, the exterior boundaries of which are more particularly defined in the final treaty, agreement, Executive order, Federal statute, Secretarial Order, or judicial determination.

Secretarial determination means a two-part determination that a gaming establishment on newly acquired lands:

(1) Would be in the best interest of the Indian tribe and its members; and

(2) Would not be detrimental to the surrounding community.

§ 292.3 When can a tribe conduct gaming activities on trust lands acquired after October 17, 1988?

In accordance with section 20 of the Indian Gaming Regulatory Act (25 U.S.C. 2719), a tribe can conduct class II or class III gaming activities on trust land acquired by the Secretary of the Interior in trust for the benefit of an Indian tribe after October 17, 1988, only if:

(a) The land meets the conditions in § 292.4; or

(b) The Secretary makes a determination under § 292.5 and the Governor of the State concurs in that determination.

§ 292.4 What criteria must trust land meet for gaming to be allowed?

(a) For class II or class III gaming to be allowed on trust land, the land must meet one of the criteria shown in the following table:

The land must * * *	as required by * * *
(1) Be located within or contiguous to the boundaries of the tribe's reservation as it existed on October 17, 1988	25 U.S.C. 2719(a)(1).
(2) Be taken into trust as part of the settlement of a land claim	25 U.S.C. 2719(b)(1)(B)(i).
(3) Be taken into trust as part of the tribe's initial reservation that the Secretary acknowledged under the Federal acknowledgment process.	25 U.S.C. 2719(b)(1)(B)(ii).

The land must * * *	as required by * * *
(4) Be taken into trust as part of the restoration of lands for a tribe that is restored to Federal recognition	25 U.S.C. 2719(b)(1)(B)(iii).
(5) Be excepted from the requirements of this section because the Secretary makes a determination under § 292.5	25 U.S.C. 2719(b)(1)(A).
(6) Meet one of the criteria in paragraph (b) of this section, if the tribe had no reservation on October 17, 1988	25 U.S.C. 2719(a)(2).

(b) If a tribe had no reservation on October 17, 1988, the land must meet one of the criteria in the following table:

If the land is located in * * *	it must be * * *	or * * *	as required by * * *
(1) Oklahoma	within the boundaries of the tribe's former reservation.	contiguous to other land held in trust or restricted status by the United States for the tribe in Oklahoma.	25 U.S.C. 2719(a)(2)(A)(i)(ii).
(2) A State other than Oklahoma	within the boundaries of the Tribe's last recognized reservation within the State where the tribe is presently located.		25 U.S.C. 2719(a)(2)(B).

§ 292.5 Can a tribe conduct gaming activities on lands acquired in trust after October 17, 1988 if the land does not qualify under one of the exceptions?

A tribe can conduct gaming on lands acquired in trust after October 17, 1988, that do not meet the criteria in § 292.4 only after all of the following occur:

(a) The tribe asks the Secretary in writing to make a Secretarial determination on the acceptability of gaming activities at a particular site;

(b) The Secretary consults with the tribe and appropriate State and local officials, including officials of other nearby tribes;

(c) The Secretary makes a determination that a gaming establishment on newly acquired lands would be in the best interest of the Indian tribe and its members and would not be detrimental to the surrounding community; and

(d) The Governor of the State in which the gaming activity is to be conducted concurs in the Secretary's determination (25 U.S.C. 2719(b)(1)(A)).

§ 292.6 Where must a tribe file an application for a Secretarial determination?

A tribe must file its application for a Secretarial determination with the Regional Director of the BIA Regional Office having jurisdiction over the land where the gaming establishment is to be located.

§ 292.7 May a tribe request a Secretarial determination for lands not yet held in trust?

Yes. A tribe can apply for a two-part Secretarial determination under § 292.5 for land not yet held in trust. The tribe must file this application at the same time that it applies under 25 CFR part 151 to have the land taken into trust.

§ 292.8 What must an application for a Secretarial determination contain?

An application requesting a Secretarial determination under § 292.5 must include the following information:

(a) The full name, address, and telephone number of the Indian tribe submitting the application;

(b) A physical description of the location of the land, including a legal description supported by a survey or other document;

(c) Proof of present ownership and title status of the land;

(d) Distance of the land from the Indian tribe's reservation or trust lands, if any;

(e) Information required by § 292.9 to assist the Secretary in determining whether the proposed gaming establishment will be in the best interest of the tribe and its members;

(f) Information required by § 292.10 to assist the Secretary in determining whether the proposed gaming establishment will not be detrimental to the surrounding community; and

(g) Copies of the documents required by § 292.11.

§ 292.9 What information must an application contain on the benefits of a proposed gaming activity?

To satisfy the requirements of § 292.8(e), an application must contain:

(a) Projections of class II and/or class III income statements, balance sheets, fixed assets accounting, and cash flow statements for the gaming entity and the Indian tribe;

(b) Projected tribal employment, job training, and career development;

(c) Projected benefits to the Indian tribe from tourism;

(d) Projected benefits to the Indian tribe and its members from the proposed uses of the increased tribal income;

(e) Projected benefits to the relationship between the Indian tribe and the surrounding community.

(f) Possible adverse impacts on the Indian tribe and plans for dealing with those impacts;

(g) Any other information that may provide a basis for a Secretarial determination that the gaming establishment would be in the best interest of the Indian tribe and its members, including copies of any:

(1) Consulting agreements;

(2) Financial agreements; and

(3) Other agreements relative to the purchase, acquisition, construction, or financing of the proposed gaming facility, or the acquisition of the land where the facility will be located.

§ 292.10 What information must an application contain on the effects of a proposed gaming activity?

To satisfy the requirements of § 292.8(f), an application must contain:

(a) Evidence of environmental impacts and plans for mitigating adverse impacts, including information that allows the Secretary to comply with the requirements of the National Environmental Policy Act (NEPA) (for example, an Environmental Assessment (EA) or an Environmental Impact Statement (EIS));

(b) Reasonably anticipated impacts on the social structure, infrastructure, services, housing, community character, and land use patterns of the surrounding community;

(c) Impacts on the economic development, income, and employment of the surrounding community;

(d) Costs of impacts to the surrounding community and sources of revenue to accommodate them;

(e) Proposed programs, if any, for compulsive gamblers and the sources of funding; and

(f) Any other information that may provide a basis for a Secretarial determination that the gaming would not be detrimental to the surrounding community.

§ 292.11 What additional documents must an application contain?

To satisfy the requirements of § 292.8(g), an application must contain a copy of each of the following:

(a) The authorizing resolution from the tribe submitting the application;

(b) The tribe's gaming ordinance or resolution approved by the National Indian Gaming Commission in accordance with 25 U.S.C. 2710, if any;

(c) The tribe's organic documents, if any;

(d) The tribe's class III gaming compact with the State where the gaming establishment is to be located, if any; and

(e) Any existing or proposed management contract required to be approved by the National Indian Gaming Commission under 25 U.S.C. 2711 and 25 CFR Part 533.

§ 292.12 What must the Regional Director do upon receiving an application?

Upon receiving an application for a Secretarial determination under § 292.5, the Regional Director must:

(a) Notify the tribe within 30 days that the application has been received, and whether any information required under § 292.8 is missing;

(b) Provide a copy of the application to the Office of Indian Gaming Management; and

(c) Consult with appropriate State and local officials, including officials of other nearby tribes.

§ 292.13 How will the Regional Director conduct the consultation process?

The Regional Director must complete the consultation process at the Region Office level.

(a) The Regional Director will send a letter that meets the requirements in § 292.14 and that solicits comments within a 60-day period to each of the following:

(1) Appropriate State and local officials; and

(2) Officials of nearby tribes.

(b) On written request, the Regional Director may extend the 60-day comment period for an additional 30 days.

(c) After the close of the consultation period, the Regional Director must:

(1) Submit a copy of the consultation comments to the applicant tribe;

(2) Allow the tribe to address or resolve any issues raised in the responses to the consultation letters;

(3) The applicant tribe must submit written comments, if any, to the Regional Director within 60 days of receipt of the consultation comments; and

(4) On written request, the Regional Director may extend the 60-day comment period in paragraph (c)(3) of this section for an additional 30 days.

§ 292.14 What criteria must the consultation letter meet?

The consultation letter required by § 292.13 (a) must meet the requirements in this section.

(a) The consultation letter must:

(1) Describe or show the location of the proposed gaming facility;

(2) Provide information on the proposed scope of gaming; and

(3) Include other information that may be relevant to a specific proposal, such as the size of the proposed facility, if known.

(b) The consultation letter must request recipients to submit comments on the following areas within 60 days of receiving the letter:

(1) Evidence of environmental impacts and plans for mitigating adverse impacts;

(2) Reasonably anticipated impact on the social structure, infrastructure, services, housing, community character, and land use patterns of the surrounding community;

(3) Impact on the economic development, income, and employment of the surrounding community;

(4) Costs of impacts to the surrounding community and sources of revenue to accommodate them;

(5) Proposed programs, if any, for compulsive gamblers and the sources of funding; and

(6) Any other information that may provide a basis for a Secretarial determination that the gaming is not detrimental to the surrounding community.

§ 292.15 What must the Regional Director do at the expiration of the comment period?

Upon completion of the comment period under § 292.13(c), the Regional Director must either:

(a) Notify the applicant tribe in writing that the application package does not support a positive recommendation for a Secretarial determination under § 292.5 and advise the applicant tribe of the reasons for the decision; or

(b) Prepare a positive recommendation and proposed Findings of Fact addressing the Secretarial determination and forward them to the Appropriate Department Official (ADO), along with the complete application record that includes the following documents:

(1) Application received from the Indian tribe and any supporting documentation;

(2) Consultation comments, including unsolicited comments from third parties not required to be consulted under § 292.13;

(3) Documentation that indicates compliance with the requirements of the National Environmental Policy Act (NEPA), including a proposed Finding of No Significant Impact (FONSI), if appropriate; and

(4) Any other documentation relied upon by the Regional Director in preparing the recommendation.

§ 292.16 What must the ADO do upon receiving the Regional Director's recommendation?

(a) Upon receiving the Regional Director's positive recommendation and the complete application record, the ADO will conduct a preliminary technical review to determine whether the record supports the Regional Director's positive recommendation and proposed Findings of Fact. The preliminary technical review:

(1) Must include consideration of all documentation provided in the application package; and

(2) May not consider comments, whether oral or written, submitted by any party after the close of the comment period in § 292.13.

(b) After completing the preliminary technical review, the ADO will:

(1) Notify the Regional Director and the applicant tribe of any deficiencies in the recommendation, proposed Findings of Fact, or application record; and

(2) Request the Regional Director to cure the identified deficiencies and to allow the tribe to withdraw the application or to submit additional information and clarification, if necessary.

§ 292.17 If the ADO finds deficiencies, what must the Regional Director and the applicant tribe do?

If the ADO notifies the tribe and Regional Director of deficiencies under § 292.16(b), the tribe and Regional Director must follow the procedures in this section.

(a) The Regional Director must respond to the preliminary technical review notification by curing the identified deficiencies, and, if appropriate, allowing the tribe to submit additional information and clarification, if necessary.

(b) The applicant tribe may do any of the following:

(1) Withdraw the application;

(2) Respond to the preliminary technical review notification by submitting to the Regional Director additional documentation to cure the identified deficiencies; or

(3) Request, in writing, that the Regional Director inform the ADO to proceed with the consideration of the application record using the documentation already submitted.

(c) After the Regional Director has modified the recommendation to cure the identified deficiencies, and obtained any additional documentation from the applicant tribe, the Regional Director must resubmit an amended recommendation with a complete application package to the ADO, unless the tribe has withdrawn its application, or requested that consideration of the application proceed on the existing record.

§ 292.18 What must the ADO do after receiving an adequate recommendation?

(a) Upon receiving an adequate recommendation and application package from the Regional Director, the ADO must:

(1) Notify the applicant tribe, officials of nearby tribes, and appropriate state and local officials, of the status of the application and inform them that they may, within 30 days of receipt of this notification, request that the ADO hold a hearing for the purpose of discussing the merits of the application. The proceedings of this hearing will be on such terms as the ADO determines are appropriate. The hearing record will be available to any participating party and become part of the record considered by the ADO in reaching a final determination in writing that the record does not support a determination under § 292.5.

(2) The ADO will transmit the hearing record to the applicant tribe and notify the applicant tribe that it will have 60 days from date of receipt to address any information submitted by third parties at the hearing.

(b) Following the expiration of the 60-day response period, the ADO must prepare final Findings of Fact on the Secretarial determination and must either:

(1) Notify the applicant tribe in writing that the record does not support a determination under § 292.5; or

(2) Notify the applicant tribe in writing that the ADO has made a favorable Secretarial determination under § 292.5 and has requested the Governor of the State to concur in that determination.

(c) In preparing the final Findings of Fact, the ADO will not consider comments on the application, whether oral or written, submitted by any party after the conclusion of the formal hearing, except comments from the applicant tribe pursuant to paragraph (a)(2) of this section.

§ 292.19 How does the ADO request the Governor's concurrence?

(a) If the ADO makes a favorable Secretarial determination under § 292.18(b), the ADO will send to the Governor of the State:

(1) A written notification of the Secretarial determination and Findings of Fact;

(2) A copy of the entire application record; and

(3) A request for the Governor's concurrence in the Secretarial determination.

(b) If the Governor does not affirmatively concur with the ADO's Secretarial determination:

(1) The land may not be used for gaming;

(2) If the land is already held in trust, the applicant tribe may use it for other purposes; and

(3) If the land is proposed for trust status, it may be taken into trust for other uses, but may not be used for gaming.

(c) If the Governor does not respond to the ADO's request for concurrence in the Secretarial determination within one year of the date of the request, the ADO may, at the request of the applicant tribe or the Governor, grant an extension of up to 180 days.

(d) If the Governor does not respond during the extension period, the Findings of Fact will be deemed stale, and the applicant tribe will be notified in writing that the Secretarial determination is no longer valid.

§ 292.20 Do information collections under this part have Office of Management and Budget approval?

We have submitted a request for approval of the information collection requirements in §§ 292.8, 292.9, 292.10, 292.11, 292.13, 292.14, 292.17 and 292.18 to the Office of Management and Budget (OMB). We may not collect or sponsor, and a person is not required to respond to, a collection of information until we have:

(a) Obtained OMB approval; and

(b) Revised this section (§ 292.20) to reflect that approval by publishing a final rule in the **Federal Register**.

Dated: August 25, 2000.

Kevin Gover,

Assistant Secretary—Indian Affairs.

[FR Doc. 00–23456 Filed 9–13–00; 8:45 am]

BILLING CODE 4310–02–P

DEPARTMENT OF THE INTERIOR

Minerals Management Service

30 CFR Parts 218, 256, and 260

RIN 1010–AC69

Outer Continental Shelf Oil and Gas Leasing

AGENCY: Minerals Management Service (MMS), Interior.

ACTION: Proposed rule.

SUMMARY: This proposed rule outlines why and how we may issue Outer Continental Shelf (OCS) leases after November 2000 with royalty suspensions. It also presents a plain-language revision of the existing rules for bidding systems and joint bidding restrictions. It does not change the current policies on royalty suspensions for leases issued before December 2000, though it does add one minor reporting requirement for leases issued with royalty suspension.

DATES: We will consider all comments we receive by October 16, 2000. We will begin reviewing comments then and may not fully consider comments we receive after October 16, 2000.

ADDRESSES: If you wish to comment, you may mail or hand-carry comments to the Department of the Interior; Minerals Management Service; Mail Stop 4024; 381 Elden Street; Herndon, Virginia 20170–4817; Attention: Rules Processing Team (RPT). The RPT's e-mail address is: *rules.comment@MMS.gov*.

Mail or hand-carry comments with respect to the information collection burden of the proposed rule to the Office of Information and Regulatory Affairs; Office of Management and Budget; Attention: Desk Officer for the Department of the Interior (OMB control number 1010–NEW); 725 17th Street, NW., Washington, DC 20503.

FOR FURTHER INFORMATION CONTACT: Marshall Rose, Economics Division, at (703) 787–1536.

SUPPLEMENTARY INFORMATION: The OCS Lands Act (OCSLA) (43 U.S.C. 1331 *et seq.*) is the authority for our regulations governing leasing of oil and gas resources on the OCS. Section 8(a)(1) of the OCSLA (43 U.S.C. 1337(a)(1)) provides authority for the Secretary of the Interior (Secretary) to offer leases

under a variety of bidding systems. This proposed rule describes the bidding systems, our joint bidding requirements, a modified rental policy, and royalty suspension for certain leases.

Overview

The regulations at 30 CFR part 260 implement the Secretary's authority to encourage leasing competition through the use of appropriate bidding-system alternatives and a joint bidding ban among certain large companies. Also, these regulations implement the Secretary's authority to promote leasing interest in certain areas of the OCS through suspension of royalties. They describe:

(1) The characteristics of various bidding systems that we can use at OCS lease sales;

(2) The criteria for listing a company as a restricted joint bidder; and

(3) Our approach to offering royalty suspension for deep water leases.

Regulations at 30 CFR part 218 cover the rental and minimum royalty fees associated with leases.

Section 303 of the Outer Continental Shelf Deep Water Royalty Relief Act (Pub.L. 104–58) 43 U.S.C. 1337(3) (the Act), established authority for the Secretary to offer tracts with royalty suspensions for a period of time, volume of production, or value of production. Section 304 made all deep water (200 meters or greater) leases issued between 1996 and 2000 in the western and central Gulf of Mexico (GOM) and westernmost part of the eastern GOM eligible for royalty suspension for certain volumes of production. In addition to modifying our royalty suspension policy and extending it to certain deep water leases issued in sales held after November 2000, this proposed rule adds a minor reporting requirement at 30 CFR 260.114 for deep water leases issued before 2001. It also clarifies and rewrites in plain language current rental regulations at 30 CFR 218.151 to provide for lessees to pay rental fees during the period of royalty suspension.

Future Royalty Suspensions

For leases issued after November 2000, we offer incentives in lease terms to encourage more exploration and development than would otherwise occur in certain domestic areas. Suspension of royalty does this, in part, by raising the prospective rate of return relative to other domestic and foreign opportunities competing for investment by multi-national oil companies. Royalty suspension also may convert marginal prospects to profitable ones. Leasing incentives can encourage more examination of an important domestic oil and gas province. This examination not only improves understanding of the potential in the area but also stimulates development of technology necessary to exploit resources found there. Also, temporary incentives can promote development sooner rather than later by compounding the advantage of infrastructure that will be installed on many of the fields recently leased in the area.

Recent leasing experience supports the notion that royalty suspensions provide a powerful incentive. MMS issued the large majority of GOM deep water leases during the period of leasing with royalty suspension volumes mandated by the Act. Of the total of 1,906 central GOM leases now active in 800 meters or deeper water, we issued 79 percent (1,497) during the first 4 years of leasing under the Act. Of the total of 1,342 western GOM leases in 800 meters or deeper water, we issued 92 percent (1,231) since the Act. However, with so much acreage in their inventory, current operators may not be able to assess the hydrocarbon producibility of all of the leases they have acquired. Only about 40 vessels are currently available to drill in deep water, and they each can drill only about four wells per year on average. Many of the currently leased deep water tracts may simply be returned unexplored. Also, leasing statistics indicate less leasing interest as water depth increases, despite the royalty suspension incentives of the Act. In water deeper than 2,400 meters, only 15 percent of available tracts have been leased in the central GOM planning area. This compares with 60 percent of available tracts in water between 200 meters and 2,400 meters deep in the central GOM. For these reasons, we see value in continuing some form of leasing incentive, especially in the deepest part of the GOM. But, because of our experience under the Act, we also see a need to adjust the deep water leasing incentive to new circumstances.

We expect that generally smaller royalty suspensions than were mandated by the Act should suffice for several reasons.

(a) Oil and gas prices are higher than they have been in at least a decade, and many now expect them to remain high for some time.

(b) The current leasing density in much of the deep water portion of the central and western GOM will improve the economics of future leases in at least two ways. One, it will build a knowledge base on the unfamiliar geology in the GOM deep water. Discoveries on already-leased tracts will provide geologic analogs that reduce play risk and the uncertainty associated with estimating reserve volumes and production characteristics faced by future deep water lessees. Two, it will eventually support the installation of critical infrastructure such as pipelines and accessible processing capacity. Existing infrastructure improves the economics of nearby resources.

(c) Experience developing already-leased deep-water tracts will identify and demonstrate the most effective technologies for operating in this challenging environment. Thus, later deep-water projects should be more efficient and face less development risk than the pioneering projects.

(d) As explained in the next section, we propose to increase the value of a given royalty suspension volume by reducing uncertainty about how much royalty relief a lease would ultimately realize. Under volumes set in the Act, bidders contend not only with whether a lease has producible reserves but also whether production from neighboring leases will preempt some or all their royalty relief. We propose to eliminate the latter form of uncertainty.

(e) Finally, we may enlarge the scope of our discretionary royalty relief program under 30 CFR part 203, which can supplement the incentive provided by royalty suspensions in leasing terms.

Perhaps the biggest change we propose in this renewal of our leasing incentive program is to have flexibility in our pre-production royalty suspension lease terms. We plan to do this by reserving to the annual lease sale notices the size and scope of the royalty suspensions we will offer. The rapid change in the economics of deep water development makes rigid leasing incentives inappropriate. Royalty suspensions attuned to one set of price and cost expectations become unrealistic when price or cost conditions change significantly. If costs fall, for instance, not only may old incentive levels provide more relief than needed for newer leases but also may undermine general support for a program of leasing incentives. On the other hand, if market prices for oil and gas show a significant or sustained decline, royalty suspensions can be adjusted upward to ensure the appropriate level of incentives necessary to sustain deep water activities. Thus, we plan to review periodically and, when appropriate, adjust future leasing incentives. However, once established, we expect the royalty suspension volumes to be in place for at least 3 years to provide industry with the certainty needed to

plan their lease acquisition and bidding strategies.

To help us design appropriate incentives, we would like comments on how best to answer the following questions:

• What factors should we consider, and how should we evaluate these factors, when we choose water depths beyond which bidders still need leasing incentives in the GOM?

• What elements besides water depth should we consider, and how should we consider them, when deciding how much royalty suspension to offer on new leases?

• Which of the following leasing policies would encourage more domestic investment, given equal expected rates of return, and why would it do so? One offering a:

(a) Substantial royalty suspension volume coupled with higher than normal royalty rates (*e.g.*, 20 percent) for additional production between specified cumulative production volumes; or

(b) Modest royalty suspension volume but with only normal lease royalty rates for production above the royalty suspension volume?

• Does the likely increase in bid levels and shift of uncertainty from government to industry that are associated with royalty suspension adversely affect small companies relative to large companies?

Lease-Based Royalty Suspension

Aside from adjusting the size and scope of royalty suspensions with which we might issue new leases in deep water, we propose to simplify the way we apply royalty suspensions to leases. The following discusses the differences between how we apply royalty suspension to leases issued between 1996 and 2000 and how we propose to apply royalty suspension to leases issued in sales held after November 2000. Under current regulations, specific leases are eligible for the royalty suspension volumes assigned to a field. With this rule, we propose to assign a royalty suspension (RS) volume to individual RS leases. Among other things, that would mean the field to which we eventually assign the RS lease would not affect how much royalty suspension the lease realizes.

Assigning royalty suspension volumes to a field rather than to a lease leaves individual lessees eligible, but uncertain about how much royalty suspension they could eventually realize. Fields typically consist of multiple leases, so we established allocation rules that generally applied the royalty suspension volume to the earliest production in the field (first come, first served). If some leases in the field produce first, little if any royalty suspension volume may be left for other leases. Because the infrastructure should then be available for late-producing leases on the field, this result was appropriate. But, if different producers on the field develop independently, existing infrastructure may not benefit later leases. Thus, reserving some royalty suspension for later leases may be vital to encouraging full development of some fields. Generally, the prospect of having to share an unknown portion of a royalty suspension for a field with other leases lessens a bidder's certainty about the value of royalty relief on a particular tract. With so many tracts now leased in deep water, new leases may face a significant risk that the royalty suspension volume on their field will have already been depleted by others by the time they reach production stage. The existing rule assigned royalty suspension volumes to fields for a variety of reasons (see the interim rule in the **Federal Register** on March 25, 1996, 61 FR 12023–12026), in part because the size of the mandatory suspension volumes was based on the incentive amount needed to encourage field development. The Act did not mandate field-sized royalty suspension volumes for sales held after November 2000, so we now propose to grant royalty suspension volumes to individual leases, without regard to field allocation rules.

Lease-based royalty suspension also eliminates the unavoidable complexity associated with a field-based incentive approach. Fields may combine leases issued under different lease terms. Some fields may have leases issued with the Act's royalty suspension volume (eligible leases) and others issued before the Act (pre-Act leases) with no royalty suspension. The combination of leases issued under different terms obligated us to establish procedures that allocate field-based, royalty suspension volumes clearly. Existing regulations at 30 CFR 260.110(d) use 14 subparagraphs to describe the rules necessary to allocate field-based relief among multiple leases and the current categories of leases. A field-based incentive approach for new leases we issue in sales after November 2000 would require additional allocation procedures.

A lease-based royalty suspension does not eliminate the need for allocation rules for fields that combine different categories of leases, but it substantially reduces the number and complexity of those rules. It achieves this by phasing out the role a field designation plays. Leases issued in sales before November 2000 must follow the current field allocation rules. Leases issued in lease sales after November 2000 will not need field allocation rules. Their RS volume stays the same no matter to what field MMS assigns them. Where they occur in a field with leases issued in lease sales before November 2000, we propose special field allocation rules to account for how new RS leases affect field suspension volumes. Production from new leases that are issued with a lease-based RS volume and that are on fields with eligible leases counts against the field-size volume on a first come, first served basis. However, unlike the eligible leases, the field's RS leases may receive their full RS volume even after the field has produced the suspension volumes allowed for eligible leases. This is the simplest way to transition into a lease-based RS volume program, while remaining consistent with the field royalty suspension program.

Lease-based royalty suspensions avoid progressive complications associated with a field-based approach. A convenient simplification used in the existing leasing regulations is that all eligible leases in the same field share, on a first come, first served basis, the maximum royalty suspension volume available to any lease in the field. This simplification avoided windfalls to individual leases and complications in allocating the field's volume suspension among individual leases. Trying to continue volume suspension incentives on a field basis would further complicate our accounting for changes in the economics of exploration and development. When we offer leases after November 2000 with volume suspensions, we intend to issue the leases with sufficient RS volumes to fit the economic circumstances prevalent at the time without providing an outdated or excessive incentive. This also helps MMS to achieve the fair market value mandates of the OCSLA. Flexibility to revise RS volumes from time to time means we can identify changes—in technology, infrastructure availability, price expectations, etc.—that support a change in the size of royalty suspension. To try to account for this flexibility in a field-based, royalty suspension volume system would not help MMS achieve its fair market value mandate and would compound the allocation complexity mentioned above.

We designate a deep water lease issued in a sale after November 2000 with a royalty suspension volume as an RS lease. Where adopted, royalty suspension will continue to take the form of zero royalty for an explicit volume of production. However, instead of a field-sized, royalty suspension volume fixed in regulation within a

designated water depth interval, we will offer RS leases with a lease-specific royalty suspension volume published in the **Federal Register** notices that announce each sale. We intend to do an analysis of how different royalty suspension volumes affect the economics of various development scenarios. That analysis will factor in changes in technology and infrastructure availability, as well as the sizes of the un-leased fields we foresee in the relevant water depths. To assign the appropriate volume to each RS lease, we intend to divide the amount of royalty suspension we consider necessary for a development by the typical number of participating leases. These RS volumes may vary by different water depth demarcations, and leases in some water depths may be issued with no volume suspension. We will propose specific suspension volumes in the Proposed Notices of Sale published in the **Federal Register** for public comment several months before each sale. After weighing any comments, we will establish the appropriate royalty suspension volumes for leases sold in that sale. We expect the volumes to be in place for sales held over the next 3 years.

We are currently in the process of determining the appropriate royalty suspension volumes for sales in the central and western GOM over the next 3 years. Part of this determination involves assessing the nature and extent of deep water oil and gas resources that could be leased in these sales. This assessment requires speculation about resource potential using the most current geologic and geophysical information, insight from recent discoveries, and estimates of how much remains undiscovered and un-leased. To insure we have the best available information on resource potential, we have been working collaboratively with industry representatives to identify the potential range and size of fields in the deep water GOM. We expect to complete our resource interpretations while these draft regulations are under public review.

At this point, we can say we presume that bidders have identified and acquired most profitable prospects, at least an ample supply of the ones on which they can assess the hydrocarbon potential over the next 5 to 10 years. Many of the remaining opportunities should be of a fill-in nature, especially in all but the deepest water. For this reason, we will be considering the merits of focusing incentives for upcoming sales on royalty suspension volumes appropriate to subsea developments that tie back to host platforms. The industry trade associations, in their August 3, 2000, letter to the Director of MMS, noted that many future discoveries that are close to existing infrastructure will be developed as tie-backs rather than stand-alone facilities because of the lower capital investments required. But they also pointed out that many companies may choose to develop some close-by fields with stand-alone facilities. The hosting potential of these close-by facilities can supplement the ability of royalty suspensions to improve lease profitability. Viewed another way, large stand-alone incentives appear unnecessarily costly at a time when remaining prospects will have access to already installed infrastructure on recently leased deep water tracts.

To help us evaluate these changes to the leasing program, we would like comments and answers to the following questions.

- Do you agree with our observation that a lease-based royalty relief program, providing a guaranteed royalty suspension volume to each lease regardless of which field it overlies, is preferable to a field-based royalty relief program, providing a royalty suspension volume to be claimed by the earliest producers on a field?
- Do you share our expectation that royalty suspension volumes tailored to a typical tie-back development will promote bidding and exploration in the deep water areas that will be available in the next several years?
- Is it reasonable to assume between 2 and 3 leases per field will be developed as a tie-back?
- What benefits would occur for bidders and lessees if we modified the volume suspensions offered on new leases every 3 years as opposed to more frequently?

Rental Payments

Under current rental regulations at 30 CFR 218.151 for OCS leases, the obligation to pay rental at the beginning of the lease year ends when a discovery is made on the lease. During the time between discovery and the start of production, MMS imposes a charge called a ''minimum royalty,'' which we typically set equal to the rental fee. Lessees pay minimum royalties at the end of the lease year. Once production begins, the minimum royalty applies if ordinary royalties fall below the annual amount associated with the minimum royalty. Thus, lessees pay a fee in one form or another for each year they hold a tract under lease.

The term ''minimum royalties'' during production of royalty suspension volumes seemed inconsistent with the royalty relief policies of the Act. Suspending minimum royalties meant collection of not even a holding fee during periods in which no royalty payments were due on production. The absence of a holding fee during the royalty suspension period on deep water leases has raised some concerns with the Department of the Interior's Office of the Inspector General. (See Evaluation Report—Opportunity to Increase Offshore Oil and Gas Rental Revenues,'' Minerals Management Service, Report No. 99–I–387, March 1999.)

In response to those concerns and to reduce confusion, we propose to clarify and rewrite in plain language the definition of rentals for new leases issued after the effective date of this rule so that the same fee applies up to the commencement of royalty payments. After this point, minimum royalty obligations apply. In fact, this treatment is similar to the way we currently define rentals for net profit share leases. Collection of rental or holding fees during royalty suspension periods is analogous to their collection during the capital recovery period when net profit share leases pay no royalty.

Relief Suspension During High Prices

Our deep water leasing program has also applied the high oil or gas price threshold provision, specified in the Act explicitly for pre-Act leases to which we grant royalty suspension under 30 CFR part 203, to eligible leases issued under 30 CFR part 260. This provision requires payment of full royalties, notwithstanding any remaining royalty suspension volume, when market prices rise above prescribed levels or thresholds. We anticipate continuing this concept, but in a more flexible manner. Again, we intend to follow the general structure established by the Act of setting a clear price threshold above which royalties must be paid, yet production continues to count against any remaining royalty suspension volume. Also, as in the Act, we intend to escalate these price thresholds for inflation. But, rather than adopt the initial oil and gas price thresholds specified in the Act, we reserve the right to adjust these to be consistent with changing cost structures in deep water. We may specify in the **Federal Register** ''Notice of OCS Lease Sale'' new price thresholds above which full royalties are due on the leases sold in that particular sale. We may adjust these thresholds sale-by-sale. However, any adjustments would apply only to new leases issued at the upcoming sale, not leases issued previously. We also may change the price or the period of

applicable production from a calendar year to a current year, rolling average year, monthly or quarterly, either retrospectively or prospectively. The Act retroactively applies royalties when prices in the previous calendar year exceed the threshold.

To select initial price thresholds for future lease sales, we will focus on recent price history, price forecasts, and a variation of our bid adequacy evaluations. Specifically, we will identify price increases from expected levels that make royalty suspension a benefit unnecessary to potential development sizes. We will do this by combining price history and forecasts with current estimates of minimum resource sizes necessary to be economic with a typical tie-back development.

To help us evaluate these proposed changes in lease terms, we would like comments on and answers to the following questions.

- What effect, if any, would rental obligations during periods of royalty-free production have on the way firms plan and manage a project?
- Do you agree with our observation that, given current costs, technology and development options in deep water and the dynamic nature of these factors, the program would benefit from periodic adjustments at the time of lease sales in price thresholds for new leases?
- Do you believe that adjustments in royalty obligations, other than retroactively for the previous calendar year are desirable? If so, why and what is the nature of the preferred adjustments?
- Do you agree with our preliminary findings that the applicable price thresholds should be 10 to 15 percent below the levels currently applicable under the Act, *e.g.*, $28 rather than $31 per barrel for oil, and $3.45 rather than $3.90 per million British thermal units?

Change to Royalty Suspension Policy for Eligible Leases

One final item of note is a proposed requirement that a lessee with eligible leases issued with a royalty suspension volume notify the MMS Regional Supervisor for Production and Development before starting production. We would add this new provision to otherwise unchanged regulations covering eligible leases. Such notification would ensure that we can timely identify how much suspension volume is used by individual leases. The new provisions increase the variety of volume suspensions that fields may have as well as the amounts attributable to individual leases in the same field. In this situation, it is prudent to validate royalty suspensions at the time of initial lease production.

To help us evaluate this proposed change, we would like comments and answers to the following question:

- Does this additional notification step impose any meaningful burden on lessees?

Citation Correction in Part 256

In addition, we are correcting a citation error in § 256.40 that we discovered in developing the proposed part 260 regulations which reference this section.

Simplification of Valuation Basis

Finally, we take this opportunity to drop a reference in the new § 260.111, to the discontinued ceiling price provisions in other parts of the CFR.

Summary of Proposed Changes

To summarize, this proposed rule would adopt plain-language phrasing and would implement the system described above by changing the existing rules in five places.

- In § 218.151, we would add language to specify the rental policy for leases issued in sales after November 2000.
- In § 260.102, we would add definitions for RS leases and enhance the existing definition for eligible leases to be clear that it refers to leases issued between 1996 and 2000. Also, we would move the definition of a pre-Act lease from the existing § 260.110(d)(9) to § 260.102.
- We would renumber the old §§ 260.110(a)–(d) and § 260.111 as §§ 260.112–260.117 and § 260.130.
- We would add a new § 260.114(c) requiring notification of start of production by eligible leases.
- Finally, we would add new §§ 260.120–260.124 to explain the basic principles we will follow in future lease sale notices when describing how royalty suspension applies to RS leases. Sections 260.112–117 and 260.120–124 are similar but separate to facilitate referencing in leasing documents for RS leases as opposed to those for eligible leases, and to facilitate future changes we may make in the regulations for future leases. Also, the separation serves to highlight the shift from a rigid field-based, to a flexible lease-based, royalty suspension policy that we propose. The proposed rules assume RS leases receive the royalty suspension volume with which we issue them (except if prices rise enough to trigger payment of royalties). Eligible leases do not have that assurance, only the eligibility to share in a field's royalty suspension volume.

Procedural Matters

Public Comment Procedure

Our practice is to make comments, including names and home addresses of respondents, available for public review during regular business hours. Individual respondents may request that we withhold their home address from the record, which we will honor to the extent allowable by law. There may be circumstances in which we would withhold from the record a respondent's identity, as allowable by law. If you wish us to withhold your name and/or address, you must state this prominently at the beginning of your comment. We will not consider any anonymous comments. We will make all submissions from organizations or businesses, and from individuals identifying themselves as representatives or officials of organizations or businesses, available for public inspection in their entirety.

Regulatory Planning and Review (Executive Order 12866)

According to the criteria in Executive Order 12866, this rule is a significant regulatory action. The Office of Management and Budget (OMB) makes the final determination under Executive Order 12866.

a. This rule will not have an annual economic effect of $100 million or adversely affect an economic sector, jobs, the environment or other units of government. This action is a plain-language rewrite of current rules and clarification of policies that may be employed for issuing leases with royalty suspensions in lease sales held after November 2000. There is no assurance that the leasing system option provided in this rule will be used in all future offshore sales. For instance, sustained high prices or a shortage of unleased tracts may cause us to discontinue leasing incentives. Even when used, the leasing system option in this rule will not change substantially the net economic value of production from leases eligible for royalty suspension volumes. Royalty suspension should lead to higher bonuses because future production will be more profitable. Also, more tracts should receive bids because royalty relief makes smaller, more remote fields potentially profitable. But, because the government collects the fair market value of a tract in the up-front bid, the risk that the tract will not prove productive is shifted entirely to the bidder. We do not expect bonus bids to fully offset the anticipated royalty savings on a specific tract. Since these offsetting effects on revenue will play out over an extended period and

involve uncertainties that will be assessed differently by the different bidders, we cannot predict the ultimate effect on government receipts. Most of the more prospective tracts have been leased already and the incentives we envision for the next several years are smaller than those mandated by the Act. Thus, we don't expect to see the level of bidding activity experienced in the last 5 years, nor the same level of future royalty reduction. At this point we can say that deep water royalty relief will serve primarily to accelerate the timing of production and redistribute realization of fair market value from royalty to bonus collection. As royalty suspension volumes are an incentive to production, they likely encourage timely exploration in hope of finding reserves, since royalty relief has no value unless and until production occurs. This acceleration will have a beneficial effect on offshore oil industry production and jobs in the near term.

b. This rule will not create inconsistencies with other agencies' actions because there are no changes in requirements from the existing rule.

c. This rule is an administrative change that will not affect entitlements, grants, user fees, loan programs, or their recipients. This rule has no effect on these programs or rights of the programs' recipients.

d. This rule will raise novel legal or policy issues. Although this action is basically the rewrite of an existing rule in plain language and sets up a more flexible framework to continue current royalty suspension policies for future sales, it comes at a time when oil and gas prices are unusually high. Some may question the need to continue leasing incentives. We believe royalty suspension remains necessary in a scaled-down and more flexible format because prices can fall as well as rise. Also, a continued program reduces disruptions associated with an abrupt termination of incentives and resultant pressure to continue the rigid, outdated and expiring terms of the Act.

Regulatory Flexibility (RF) Act

The Department certifies that this proposed rule would not have a significant economic effect on a substantial number of small entities under the RF Act (5 U.S.C. 601 *et seq.*). The provisions of this rule will not have a significant economic effect on offshore lessees and operators, including those that are classified as small businesses. The rule will authorize royalty relief to certain OCS leases awarded in sales held after November 2000. New regulatory provisions will offer firms, large and small, economic incentives to acquire and develop deep water leases in the GOM.

Companies that extract oil, gas, or natural gas liquids or are otherwise in oil and gas exploration and development activities acquire the vast majority of leases offered at OCS lease sales and will be most affected by this rule. The Small Business Administration (SBA) defines a small business as having:

- Annual revenues of $5 million or less for exploration service and field service companies.
- Fewer than 500 employees for drilling companies and for companies that extract oil, gas, or natural gas liquids.

Under the Standard Industrial Classification code, 1381, Drilling Oil and Gas Wells, MMS estimates that a total of 1,380 firms drill oil and gas wells onshore and offshore. The group most affected by this rule is the approximately 130 companies that are offshore lessees/operators. According to SBA criteria, 39 companies qualify as large firms, leaving up to 91 companies that may qualify as small firms with fewer than 500 employees. However, because of the extremely high cost and technical complexity involved in exploration and development in deep water, the vast majority of lessees/operators that will be affected by this rule will be large companies. Nineteen of the 26 lessee/operators that have registered a total of 211 discoveries by mid-year 2000 in deep water (200 meters and greater) are not small and these 19 large firms account for over 91 percent of the total discoveries. The proposed rule envisions limiting incentives to deeper water (800 meters and greater) than the Act, where the presence of large firms is even more prevalent. Virtually all of the prospective tracts in the part of deep water where small firms traditionally operate are already under lease.

This rule would add costs in two areas where there are no costs under the existing rules and the deep water royalty relief terms associated with eligible leases. First, lease terms for eligible leases suspended all payments, including rents and minimum royalties, after start of production on the lease and until the mandated royalty suspension volumes were fully produced. This rule would require that lessees of leases issued in sales after the effective date of this rule must continue to make annual rental payments after a discovery until established suspension volumes have been produced and lessees begin to make royalty payments on production at the lease-stipulated royalty rate. Rentals would replace minimum royalties between discovery and start of production for those leases. Experience to date (mid-2000) shows that only three leases issued with the royalty suspension terms set by the Act have gone into production. One of these three operators is a small business, and the other two might be. If that experience continues for leases issued after this rule, we might expect that perhaps one such lease may produce by 2004, and two more might produce by 2005. Thus, these new leases, irrespective of the size of the lessee, may owe extra rentals ($43,200/lease/year) of $172,800, or an average over the next 5 years of just below $35,000/year. This estimate presumes that these leases will pay rentals instead of ''minimum royalties'' between discovery and start of production.

Second, the rule would add the requirement that owners of eligible leases notify MMS prior to initiating production on the leases. We estimate it will take an operator one-half hour to draft, finalize, and send such a notification letter. We envision that this letter will be very brief and give only pertinent data such as lease number, area/block, date production is scheduled to commence, and language requesting confirmation of the amount of royalty relief applicable. We currently have six eligible leases with approved Development Operations Coordination Documents (DOCD) and 264 eligible leases with approved Plans of Exploration (POE). For this analysis, we assume that:

(1) All six leases with approved DOCDs will commence production within the first 5 years;

(2) Thirty percent (79) of the 264 leases with approved POEs will drill a discovery well; and

(3) Twenty-five percent (20) of those leases with a discovery well will obtain a DOCD and commence production. Based on these assumptions, we estimate that a total of 26 eligible leases will commence production within the next 5 years.

At an estimated paperwork cost of $50 per hour or $25 per notification, the total estimated cost of the notification requirement for the first 5 years in which the rule is in effect is $650 or $130 per year.

Thus, total estimated incremental costs associated with this proposed rule are slightly below $35,000 per year on average through 2005. The annual cost will be spread among lessees whose eligible leases commence production and eventually among leases issued after this rule becomes effective and that produce with a royalty suspension. Based on the ratios found above, small

business may incur one-tenth to one-third of this incremental cost. The annual cost for a small business with a producing royalty suspension lease paying rental and several eligible leases commencing production could be approximately $44,000 per year. It is clear, however, that the magnitude of the costs do not impose a significant economic effect on a substantial number of small business entities engaged in multi-million dollar drilling and development activities.

Further, any costs associated with the rule must be viewed in light of the substantial economic benefits to be gained from the suspension of royalty payments on the established volume of production. While estimated averaged annual costs are just under $35,000 per year through 2005, lessees that produce stand to gain tens of millions of dollars in royalty relief from the rule. For example, the standard royalty portion (⅛) of say an eight MMBOE royalty suspension volume is worth between $20 and $30 million at current oil and gas prices. Again, small business may claim one-tenth to one-third of this benefit. The potential benefit of royalty relief to a small business can be as high as $5 million/year, far outweighing the $44,000 maximum cost/year for a small business operating in deep water.

Your comments are important. The Small Business and Agriculture Regulatory Enforcement Ombudsman and 10 Regional Fairness Boards were established to receive comments from small businesses about Federal agency enforcement actions. The Ombudsman will annually evaluate the enforcement activities and rate each agency's responsiveness to small business. If you wish to comment on the enforcement actions of MMS, call toll-free (888) 734–3247.

Small Business Regulatory Enforcement Fairness Act (SBREFA)

This proposed rule is not a major rule under the SBREFA, 5 U.S.C. 804(2). This rule:

a. Does not have an annual effect on the economy of $100 million or more. This rule rewrites the existing rule and clarifies royalty suspension policies for future sales. This rule does not specify exact royalty suspension parameters, but describes concepts that we will follow in determining sale-specific royalty suspensions for designated tracts. While royalty suspension volumes for future sales are not likely to be as high as the current levels specified in the Act, they will still provide meaningful benefits to large and small business lessees.

In general, royalty suspension redistributes revenues—royalty payments decline during the royalty suspension period, while bonus payments before exploration and tax payments due on extra income to the lessee during the royalty suspension period increase. To benefit from the royalty suspension, the lease must produce. Because only a fraction of tracts leased ultimately produce oil and gas, a relatively small number of tracts actually receive a royalty suspension. To determine the annual effect of the royalty relief system on the economy, both the effects on bonus bids and future royalties need to be considered. For purposes of illustration, consider the experience from sales where leases have had time to run the course of the original lease term. Data for leases issued during the period 1983 to 1988 (when no royalty suspension volumes were offered but also when many of the best prospects were leased) show that, on average, only about 15 percent go into production. Also, estimates for sales between 1996 and 2000 suggest that bidders bid about a $500,000 premium per royalty suspension lease. Using a ratio of seven leases issued for every one (15 percent) that produces, the Government can expect to collect perhaps $3.5 million in extra bonus revenues for each lease that uses a royalty suspension. If royalty suspension causes some leases to be bid on that otherwise would not be, the Government would collect even more extra bonus. Unfortunately we have no good estimates of this second kind of extra bonus. Nonetheless, the extra bonus from the seven-plus leases will be offset by collection of about $20 million less in royalties from the one that produces (*e.g.,* ⅛ of eight MMBOE times $20/BOE over the production period (*e.g.,* 2010 to 2020). If extra taxes reclaim about ¼ of the royalty cost savings, those are comparable sums on a present value basis (*e.g.,* $7 \times \$0.5$ approximately = $\$20\ (1 - \$0.25) \times 0.26$ where 0.26 is a discount factor for payments received 10 to 20 years in the future). Thus, even when scaled up to cover sales of hundreds of leases in any one year, this rule will not have an annual effect on the economy of $100 million or more.

b. Will not cause a major increase in costs or prices for consumers, individual industries, Federal, State, or local government agencies, or geographic regions. Oil prices are not based on the production from any one region, but are based on worldwide production and demand at any point in time. While gas prices are more localized, they correlate to oil prices. The rule does not change any existing leasing policies, so it should not cause prices to increase.

c. Does not have significant adverse effects on competition, employment, investment, innovation, or the ability of United States-based enterprises to compete with foreign-based enterprises. Leasing on the United States OCS is limited to residents of the United States or companies incorporated in the United States. This rule does not change that requirement, so it does not change the ability of United States firms to compete in any way.

Unfunded Mandates Reform Act (UMRA)

This rule does not impose an unfunded mandate on State, local, or tribal governments or the private sector of more than $100 million per year. The rule does not have a significant or unique effect on State, local, or tribal governments. The rule describes the existing regulation in ''plain language'' and clarifies royalty suspension policies for OCS lease sales held after November 2000. A statement containing additional UMRA (2 U.S.C. 1531 *et seq.*) information is not required.

Takings Implications Assessment (Executive Order 12630)

According to Executive Order 12630, the rule does not have significant Takings Implications. A Takings Implication Assessment is not required because the rule would not take away or restrict a bidders right to acquire OCS leases.

Federalism (Executive Order 13132)

According to Executive Order 13132, this rule does not have Federalism implications. This rule does not substantially and directly affect the relationship between the Federal and State Governments. This rule affects the collection of royalty revenues and rentals from lessees in the deep water GOM, all of which are outside State jurisdiction. States have no role in this activity with or without this rule. This rule does not impose costs on States or localities. States and local governments play no part in the administration of the deep water royalty relief or rental programs.

Civil Justice Reform (Executive Order 12988)

According to Executive Order 12988, the Office of the Solicitor has determined that this rule does not unduly burden the judicial system and meets the requirements of sections 3(a) and 3(b)(2) of the Order.

Paperwork Reduction Act (PRA)

The proposed revisions to 30 CFR parts 218 and 256 do not contain any information collection subject to the PRA and do not require that a form OMB 83–I be submitted to OMB for review and approval under § 3507(d) of the PRA.

The proposed revisions to 30 CFR part 260 contain information collection subject to the PRA, and a form OMB 83–I has been submitted to OMB for review and approval under § 3507(d) of the PRA. The proposed revisions also contain references to approved information collection requirements in 30 CFR parts 203 and 256. OMB control numbers for the information collections in parts 203 and 256 are 1010–0071 and 1010–0006.

The title of the collection of information for the revised part 260 is ''30 CFR 260—Outer Continental Shelf Oil and Gas Leasing'' (OMB control number 1010–NEW). Respondents include approximately 130 Federal OCS oil and gas lessees. The frequency of response is on occasion. Responses to this collection of information are required to obtain or retain a benefit. MMS will protect proprietary information according to the Freedom of Information Act and 30 CFR 250.196, ''Data and information to be made available to the public.''

This rulemaking imposes only one new information collection burden. Under § 260.114(c), respondents must notify MMS of their intention to begin production, and they must request confirmation of the size of the royalty suspension volume that applies to their eligible lease. We estimate the burden to be one-half hour per notification, and that we would receive five-to-six notices annually. MMS will use the information collected to avoid errors about the shares of the royalty suspension volume for a field available to individual leases on the field.

The current part 260 regulations contain a provision for a lessee or other affected lessees to request reconsideration of MMS's assignment of a lease that has a qualifying well to an existing field or designate a new field (current § 260.110(d)(2)). At the time the current regulations were drafted, appeals and reconsiderations were considered exempt under the PRA. In the proposed part 260, §§ 260.114 and 260.124 contain this same provision. However, appeals and reconsiderations are no longer considered exempt, and our submission to OMB for information collection approval also includes the estimated burden for these sections. We estimate the burden can range between 80 and 1,000 hours per request for reconsideration. That wide range reflects the fact that fields can underlie from 1 to more than 10 leases, can include from one to several dozen reservoirs, or can require simple to complex geological and geophysical interpretations. Because a favorable field assignment can save a lessee tens of millions of dollars in royalties, we may get as many simple as complex appeals. For purposes of estimating burden, we assume that we receive three or four annually, uniformly spread over the simple to complex range with an average burden of 400 hours. MMS uses the information collected to reconsider and adjust, if necessary, the initial field assignment for a lease.

We estimate the total annual reporting ''hour'' burden for the proposed 30 CFR part 260 regulations to be about 1,600 hours. There are no recordkeeping requirements.

As part of our continuing effort to reduce paperwork and respondent burdens, MMS invites the public and other Federal agencies to comment on any aspect of the reporting burden in part 260. You may submit your comments directly to the Office of Information and Regulatory Affairs, OMB. Send a copy of your comments to MMS. Refer to the ''Addresses'' section for mailing instructions. MMS will summarize written responses to this notice and address them in the final rule preamble. All comments will become a matter of public record.

The PRA provides that an agency may not conduct or sponsor and a person is not required to respond to a collection of information unless it displays a currently valid OMB control number. In order for MMS to have final regulations in effect before the final notice of the next lease sale, the comment period on this NPR is limited to 30 days. OMB may make a decision concerning the collection of information contained in these proposed regulations after. Therefore, a comment to OMB is best assured of having its full effect if OMB receives it by October 16, 2000.

1. MMS specifically solicits comments on the following questions:

(a) Is the proposed collection of information necessary for MMS to properly perform its functions, and will it be useful?

(b) Are the estimates of the burden hours of the proposed collection reasonable?

(c) Do you have any suggestions that would enhance the quality, clarity, or usefulness of the information to be collected?

(d) Is there a way to minimize the information collection burden on those who are to respond, including the use of appropriate automated electronic, mechanical, or other forms of information technology?

2. In addition, the PRA requires agencies to estimate the total annual reporting and recordkeeping ''non-hour cost'' burden resulting from the collection of information. We have not identified any such burdens.

National Environmental Policy Act (NEPA) of 1969

This rule does not constitute a major Federal action significantly affecting the quality of the human environment. A detailed statement under the NEPA is not required.

Government-to-Government Relationship With Tribes

According to the President's memorandum of April 29, 1994, ''Government-to-Government Relations with Native American Tribal Governments'' (59 FR 22951) and 512 DM 2, we have determined that there are no effects from this action on federally recognized Indian tribes.

Clarity of this Regulation

Executive Order 12866 requires each agency to write regulations that are easy to understand. We invite your comments about how to make this rule easier to understand, including answers to questions like the following:

(1) Are the characteristics of the alternative bidding systems clearly stated?

(2) Is the approach for granting royalty suspension to post-2000 leases clearly described?

(3) Are the requirements to be listed as a restricted joint bidder clearly stated?

(4) Does the rule contain technical language or jargon that interferes with its clarity?

(5) Does the format of the rule (grouping and ordering of sections, use of headings, etc.) increase or reduce its clarity?

(6) Would the rule be easier to understand if it were divided into more, but shorter sections?

(7) Is there anything else we can do to make the rule easier to understand?

Send a copy of any comments that concern how we could make this rule easier to understand to Office of Regulatory Affairs, Department of the Interior, Room 7229, 1849 C Street, N.W., Washington, D.C. 20240. You may also e-mail your comments to Exsec@ios.doi.gov.

List of Subjects

30 CFR Part 218

Continental shelf, Mineral royalties, Public lands—Mineral resources.

30 CFR Part 256

Administrative practice and procedure, Continental shelf, Environmental protection, Government contracts, Mineral royalties, Oil and gas exploration, Pipelines, Public lands—mineral resources, Public lands—rights-of-way, Reporting and recordkeeping requirements, Surety bonds.

30 CFR Part 260

Continental shelf, Mineral royalties, Oil and gas leasing, Reporting requirements.

Dated: August 31, 2000.

Sylvia V. Baca,

Assistant Secretary, Land and Minerals Management.

For the reasons stated in the preamble, the Minerals Management Service (MMS) proposes to amend 30 CFR parts 218, 256, and 260 as follows:

PART 218—COLLECTION OF ROYALTIES, RENTALS, BONUSES AND OTHER MONIES DUE THE FEDERAL GOVERNMENT

1. The authority citation for part 218 continues to read as follows:

Authority: 25 U.S.C. 396 *et seq.*, 396a *et seq.*, 2101 *et seq.*; 30 U.S.C. 181 *et seq.*, 351 *et seq.*, 1001 *et seq.*, 1701 *et seq.*; 31 U.S.C.A. 3335; 43 U.S.C. 1301 *et seq.*, 1331 *et seq.*, 1801 *et seq.*

2. In § 218.151, the section heading is revised; an introductory paragraph is added; paragraphs (a) and (b) are revised to read as set forth below; paragraphs (c) and (d) are removed; and paragraph (e) is redesignated as paragraph (c).

§ 218.151 Rental fees.

The annual rental paid in any year is in addition to, and is not credited against, any royalties due from production. The lessee must pay an annual rental as shown in paragraphs (a), (b), and (c) of this section.

(a) This paragraph applies to any lease not covered by paragraph (b) or paragraph (c) of this section.

For	issued as a result of a sale held	the lessee must pay rental
(1) An oil and gas lease	before the effective date of this part, [insert effective date of this rule].	on the first day of each lease year before the discovery of oil or gas on the lease.
(2) An oil and gas lease	after the effective date of this part, [insert effective date of this rule].	on the first day of each lease year before the date the first royalty payment is due on the lease.
(3) A mineral lease for other than oil or gas.	before the effective date of this part, [insert effective date of this rule].	on the first day of each lease year before the discovery in paying quantities.
(4) A mineral lease for other than oil or gas.	after the effective date of this part, [insert effective date of this rule].	on the first day of each lease year before the date the first royalty payment becomes due.

(b) This paragraph applies to any lease created by segregating a portion of a producing lease when there is no actual or allocated production on the segregated portion. The lessee must pay an annual rental for the segregated portion at the rate specified in the lease. The lessee must pay the rental as shown in the following table.

If the lease results from a segregation	the lessee must pay rental
(1) Before the effective date of this part, [insert effective date of this rule].	on the first day of each lease year before the discovery of oil or gas on the segregated portion.
(2) After the effective date of this part, [insert effective date of this rule]	on the first day of each lease year before the date the first royalty payment is due on the segregated portion.

(c) * * *

PART 256—LEASING OF SULPHUR OR OIL AND GAS IN THE OUTER CONTINENTAL SHELF

3. The authority citation for part 256 continues to read as follows:

Authority: 42 U.S.C. 6213 and 43 U.S.C. 1331, *et seq.*

4. In § 256.40, the introductory paragraph is revised to read as follows:

§ 256.40 Definitions

The following definitions apply to §§ 256.38 through 256.44 of this part.

* * * * *

5. Part 260 is revised to read as follows:

PART 260—OUTER CONTINENTAL SHELF OIL AND GAS LEASING

Subpart A—General Provisions

Sec.

260.1 What is the purpose of this part?
260.2 What definitions apply to this part?
260.3 What is MMS's authority to collect this information?

Subpart B—Bidding Systems

260.101 What is the purpose of this subpart?
260.102 What definitions apply to this subpart?
260.110 What bidding systems may MMS use?
260.111 What conditions apply to the bidding systems that MMS uses?
260.112 How do royalty suspension volumes apply to eligible leases?
260.113 When does an eligible lease qualify for a royalty suspension volume?
260.114 How does MMS assign and monitor royalty suspension volumes for eligible leases?
260.115 How long will a royalty suspension volume for an eligible lease be effective?
260.116 How do I measure natural gas production on my eligible lease?
260.117 What other provisions apply to royalty suspension volumes for eligible leases?
260.120 How do royalty suspension volumes apply to leases issued in a sale held after November 2000?
260.121 When does a lease issued in a sale held after November 2000 get a royalty suspension volume?
260.122 How long will a royalty suspension volume be effective for a lease issued in a sale held after November 2000?
260.123 How do I measure natural gas production for a lease issued in a sale held after November 2000?
260.124 How will royalty suspension apply if MMS assigns a lease issued in a sale held after November 2000 to a field that has an eligible or pre-Act lease?
260.130 What criteria does MMS use for selecting bidding systems and bidding system components?

Subpart C [Reserved]

Subpart D—Joint Bidding

260.301 What is the purpose of this subpart?
260.302 What definitions apply to this subpart?
260.303 What are the joint bidding requirements?

Authority: 43 U.S.C. 1331 *et seq.*

Subpart A—General Provisions

§ 260.1 What is the purpose of this part?

Part 260 implements the Outer Continental Shelf Lands Act (OCSLA), 43 U.S.C. 1331 *et seq.*, as amended, by providing regulations to foster competition including, but not limited to:

(a) Implementing alternative bidding systems;

(b) Prohibiting joint bidding for development rights by certain types of joint ventures; and

(c) Establishing diligence requirements for Federal OCS leases.

§ 260.2 What definitions apply to this part?

OCSLA means the Outer Continental Shelf Lands Act, (43 U.S.C. 1331 *et seq.*), as amended.

OCS lease means a Federal lease for oil and gas issued under the OCSLA.

Person includes, in addition to a natural person, an association, a State, or a private, public, or municipal corporation.

We means the Minerals Management Service (MMS).

You means the lessee.

§ 260.3 What is MMS's authority to collect this information?

The Paperwork Reduction Act of 1995 (PRA) requires us to inform you that we may not conduct or sponsor and you are not required to respond to a collection of information unless it displays a currently valid OMB control number. OMB approved the information collection requirements in part 260 under 44 U.S.C. 3501 *et seq.* and assigned OMB control number 1010-XXXX. The PRA also requires us to inform you of the following:

(a) We use the information collected:

(1) To make decisions on requests for reconsideration of our assignment of a lease that has a qualifying well to an existing field or designate a new field.

(2) To ensure that the royalty suspension volume is properly allocated among constituent leases on a field.

(b) Respondents are Federal OCS oil and gas lessees. Responses are required to obtain or retain a benefit. We will protect proprietary information under applicable law and part 250 of this chapter.

(c) You may send comments regarding any aspect of the collection of information under this part, including suggestions for reducing the burden, to the Information Collection Clearance Officer, Minerals Management Service, Mail Stop 4230, 1849 C Street, N.W., Washington, D.C. 20240.

Subpart B—Bidding Systems

General Provisions

§ 260.101 What is the purpose of this subpart?

This subpart establishes the bidding systems that we may use to offer and sell Federal leases for the exploration, development, and production of oil and gas resources located on the OCS. We may only use bidding systems established by this subpart in OCS lease sales.

§ 260.102 What definitions apply to this subpart?

Act means the Outer Continental Shelf Deep Water Royalty Relief Act, Pub.L. 104–58, 43 U.S.C. 1337(3).

Eligible lease means a lease that:

(1) Results from a sale held after November 28, 1995, and before November 28, 2000;

(2) Is located in the Gulf of Mexico in water depths of 200 meters or deeper;

(3) Lies wholly west of 87 degrees, 30 minutes West longitude; and

(4) Is offered subject to a royalty suspension volume.

Field means an area consisting of a single reservoir or multiple reservoirs all grouped on, or related to, the same general geological structural feature and/or stratigraphic trapping condition. Two or more reservoirs may be in a field, separated vertically by intervening impervious strata, or laterally by local geologic barriers, or by both.

Highest responsible qualified bidder means a person who has met the appropriate requirements of 30 CFR part 256, subpart G, and has submitted a bid higher than any other bids by qualified bidders on the same tract.

Highest royalty rate means the highest percent rate payable to the United States, as specified in the leases, in the amount or value of the production saved, removed, or sold.

Lease period means the time from lease issuance until relinquishment, expiration, or termination.

Lowest royalty rate means the lowest percent rate payable to the United States, as specified in the leases, in the amount or value of the production saved, removed, or sold.

OCS lease sale means the Department of the Interior (DOI) proceeding by which leases for certain OCS tracts are offered for sale by competitive bidding and during which bids are received, announced, and recorded.

Pre-Act lease means a lease that:

(1) Results from a sale held before November 28, 1995;

(2) Is located in the Gulf of Mexico in water depths of 200 meters or deeper; and

(3) Lies wholly west of 87 degrees, 30 minutes West longitude. (See 30 CFR part 203.)

Period of production means the period during which the amount of oil and gas produced from a tract (or, if the tract is unitized, the amount of oil and gas as allocated under a unitization formula) will be measured for purposes of determining the amount of royalty payable to the United States.

Qualified bidder means a person who has met the appropriate requirements of 30 CFR part 256, subpart G.

Royalty rate means the percentage of the amount or value of the production saved, removed, or sold that is due and payable to the United States Government.

Royalty suspension (RS) lease means a lease that:

(1) Results from a sale held after November 28, 2000;

(2) Is in locations or planning areas specified in a particular Notice of OCS Lease Sale; and

(3) Is offered subject to a royalty suspension volume specified in a Notice of OCS Lease Sale published in the **Federal Register**.

Tract means a designation assigned solely for administrative purposes to a block or combination of blocks that are identified by a leasing map or an official protraction diagram prepared by the DOI.

Value of production means the value of all oil and gas production saved, removed, or sold from a tract (or, if the tract is unitized, the value of all oil and gas production saved, removed, or sold and credited to the tract under a unitization formula) during a period of production. The value is determined according to § 260.111(e).

§ 260.110 What bidding systems may MMS use?

We will apply a single bidding system selected from those listed in this section to each tract included in an OCS lease sale. The following table lists bidding systems, the bid variables, and characteristics.

For the bidding system	The bid variable is the	And the characteristics are
(a) Cash bonus bid with a fixed royalty rate of not less than 12.5 percent.	Cash bonus	The highest responsible qualified bidder will pay a royalty rate of not less than 12.5 percent at the beginning of the lease period. We will specify the royalty rate for each tract offered in the Notice of OSC Lease Sale published in the **Federal Register**.
(b) Royalty rate bid with fixes cash bonus	Royalty rate	We will specify the fixed amount of cash bonus the highest responsible qualified bidder must pay in the Notice of OCS Lease Sale published in the **Federal Register**.
(c) Cash bonus bid with a sliding royalty rate of not less than 12.5 percent at the beginning of the lease period.	Cash bonus	(1) We will calculate the royalty rate the highest responsible qualified bidder must pay using either: (i) A sliding-scale formula, which relates the royalty rate to the adjusted value of production, or (ii) A schedule that establishes the royalty rate that we will apply to specified ranges of the adjusted value of production. (2) We will determine the adjusted value of production by applying an inflation factor to the actual value of production. (3) If you are the successful high bidder, your lease will include the sliding-scale formula or schedule and will specify the lowest and highest royalty rates that we can charge. (4) You will pay a royalty rate of not less than 12.5 percent at the beginning of the lease period. (5) We will include the sliding-scale royalty formula or schedule, inflation factor and procedures for making the inflation adjustment and determining the value or amount of production in the Notice of OCS Lease Sale published in the **Federal Register**.
(d) Cash bonus bid with fixed share of the net profits or no less than 30 percent.	Cash bonus	(1) If we award you a lease as the highest responsible qualified bidder, you will determine the amount of the net profit share payment to the United States for each month by multiplying the net profit share base times the net profit share rate, according to § 220.022. You will calculate the net profit share base according to § 220.021. (2) You will pay a net profit share of not less than 30 percent. (3) We will specify the capital recovery factor, as described in § 220.020, and the net profit share rate, both of which may vary from tract to tract, in the Notice of OCS Lease Sale published in the **Federal Register**.
(e) Cash bonus with variable royalty rate(s) during one or more periods of production.	Cash bonus	(1) We may suspend or defer royalty for a period, volume, or value of production. Notwithstanding suspensions or deferrals, we may impose a minimum royalty. The suspensions or deferrals may vary based on prices or price changes of oil and/or gas. (2) You may pay a royalty rate less than 12.5 percent on production but not less than zero percent. (3) We will specify the applicable royalty rate(s) and suspension or deferral magnitudes, formulas, or relationships in the Notice of OCS Lease Sale published in the **Federal Register**.
(f) Cash bonus with royalty rate(s) based on formula(s) or schedule(s) during one or more periods of production.	Cash bonus	We will base the royalty rate on formula(s) or schedule(s) specified in the Notice of LCS Lease Sale published in the **Federal Register**.
(g) Cash bonus with a fixed royalty rate of not less than 12.5 percent, at the beginning of the lease period, suspension of royalties for a period, volume, or value of production, or depending upon selected characteristics of extraction, and with suspensions that may vary based on the price of production.	Cash bonus	Except for periods of royalty suspension, you will pay a fixed royalty rate of not less than 12.5 percent. If we award to you a lease under this system, you must calculate the royalty due during the designated period using the rate, formula, or schedule specified in the lease. We will specify the royalty rate, formula, or schedule in the Notice of OCS Lease Sale published in the **Federal Register**.

§ 260.111 What conditions apply to the bidding systems that MMS uses?

(a) For each of the bidding systems in § 260.110, we will include an annual rental fee. Other fees and provisions may apply as well. The Notice of OCS Lease Sale published in the **Federal Register** will specify the annual rental and any other fees the highest responsible qualified bidder must pay and any other provisions.

(b) If we use any deferment or schedule of payments for the cash bonus bid, we will specify and include it in the Notice of OCS Lease Sale published in the **Federal Register**.

(c) For the bidding systems listed in this subpart, if the bid variable is a cash bonus bid, the highest bid by a qualified bidder determines the amount of cash bonus to be paid. We will include the minimum bid level(s) in the Notice of OCS Lease Sale published in the **Federal Register**.

(d) For the bidding systems listed in this subpart, if the bid variable is royalty rate, the highest bid by a qualified bidder determines the royalty rate to be paid. We will include the minimum

royalty rate(s) in the Notice of OCS Lease Sale published in the **Federal Register**.

(e) The value basis for determining the actual value of production for purposes of computing royalty according to the bidding systems established in this section is determined under 30 CFR part 206.

(f) We may, by rule, add to or modify the bidding systems listed in § 260.110, according to the procedural requirements of the OCSLA, 43 U.S.C. 1331 *et seq.*, as amended by Public Law 95–372, 92 Stat. 629.

Eligible Leases

§ 260.112 How do royalty suspension volumes apply to eligible leases?

Royalty suspension volumes, as specified in section 304 of the Act, apply to eligible leases that meet the criteria in § 260.113. For purposes of this section and §§ 260.113 through 260.117:

(a) Any volumes of production that are not normally royalty-bearing under the lease or the regulations (*e.g.*, fuel gas) do not count against royalty suspension volumes; and

(b) Production includes volumes allocated to a lease under an approved unit agreement.

§ 260.113 When does an eligible lease qualify for a royalty suspension volume?

(a) Your eligible lease may receive a royalty suspension volume only if it is in a field where no current lease produced oil or gas (other than test production) before November 28, 1995. For eligible leases, the bidding system in § 260.110(g) applies only to leases in fields that meet this condition.

(b) You may receive a royalty suspension volume only if your entire lease is west of 87 degrees, 30 minutes West longitude. A field that lies on both sides of that meridian will receive a royalty suspension volume only for those eligible leases lying entirely west of the meridian.

§ 260.114 How does MMS assign and monitor royalty suspension volumes for eligible leases?

(a) We will assign your lease that has a qualifying well (under 30 CFR part 250, subpart A) to an existing field or designate a new field and will notify you and other affected lessees in the field of that assignment.

(1) Within 30 days of that notification, you or any of the other affected lessees may file a written request with the Director of MMS (Director) for reconsideration accompanied by a ''Statement of Reasons.''

(2) The Director will respond in writing either affirming or reversing the assignment decision. The Director's decision is final for the Department of the Interior (DOI) and is not subject to appeal to the Interior Board of Land Appeals under 30 CFR part 290 and 43 CFR part 4.

(b) We will specify the water depth for each eligible lease in the ''Final Notice of OCS Lease Sale.'' Our determination of water depth for each lease is final once we issue the lease. We will specify in the Notice the royalty suspension volume applicable to each water depth. We show the minimum royalty suspension volumes for fields in million barrels of oil equivalent (MMBOE) in the following table:

Water depth	Minimum royalty suspension volume
(1) 200-to-400 meters	17.5 MMBOE.
(2) 400-to-800 meters	52.5 MMBOE.
(3) 800 meters or more.	87.5 MMBOE.

(c) Before commencing production, you must:

(1) Notify the MMS Regional Supervisor for Production and Development of your intention to start production; and

(2) Request confirmation of the size of the royalty suspension volume that applies to your eligible lease.

(d) When production (other than test production) first occurs from any of the eligible leases in a field consisting only of eligible leases, we will determine what royalty suspension volume applies to the leases(s) in that field. We base the determination for eligible lease(s) on the royalty suspension volumes specified in paragraph (b) of this section and § 260.117(a).

(e) Your eligible lease may obtain more than one royalty suspension volume. If a new field is discovered on your eligible lease that already benefits from the royalty suspension volume from another field, production from that new field receives a separate royalty suspension.

§ 260.115 How long will a royalty suspension volume for an eligible lease be effective?

A royalty suspension volume for an eligible lease will continue through the end of the month in which cumulative production, from the leases in a field entitled to share the royalty suspension volume, reaches that volume or the lease period ends.

§ 260.116 How do I measure natural gas production on my eligible lease?

You must measure natural gas production on your eligible lease subject to the royalty suspension volume as follows: 5.62 thousand cubic feet of natural gas, measured according to 30 CFR part 250, subpart L, equals one barrel of oil equivalent.

§ 260.117 What other provisions apply to royalty suspension volumes for eligible leases?

In addition to the provisions in §§ 260.111 through 260.116, the provisions in this section apply to royalty suspension volumes on eligible leases.

(a) If a new field consists of eligible leases in different water-depth categories, the royalty suspension volume associated with the deepest eligible lease applies.

(b) If your eligible lease is the only eligible lease in a field, you do not owe royalty on the production from your lease up to the applicable royalty suspension volume.

(c) If a field consists of more than one eligible lease:

(1) Payment of royalties on the eligible leases' initial production is suspended until cumulative production equals the field's established royalty suspension volume;

(2) Only production from leases entitled to share in the field's royalty suspension volume counts as part of this cumulative production; and

(3) The royalty suspension volume for each eligible lease is equal to each lease's actual production (or production allocated under an approved unit agreement) until the field's royalty suspension volume is reached.

(d) This paragraph applies if we add an eligible lease to a field that has an established royalty suspension volume that we approved under 30 CFR part 203. This paragraph also applies to a field that has an established royalty suspension volume as a result of production starting from one or more eligible leases in the field. In situations covered by this paragraph:

(1) The field's royalty suspension volume will not change, even if the added lease is in deeper water;

(2) If we granted a royalty suspension volume under 30 CFR part 203 that is larger than the minimum specified for that water depth, the added eligible lease may share in the larger suspension volume;

(3) The eligible lease may receive a royalty suspension volume only to the extent of its production before the cumulative production equals to the field's previously established royalty suspension volume; and

(4) Only production from leases entitled to share in the field's previously established royalty suspension volume counts as part of this cumulative production.

(e) A pre-Act lease(s) may receive a royalty suspension volume under 30 CFR part 203 for a field that already has a royalty suspension volume due to eligible leases. If this happens, then:

(1) The eligible and pre-Act leases share a single royalty suspension volume;

(2) The field's royalty suspension volume is the larger of the volume for the eligible leases or the volume MMS grants in response to the pre-Act leases' application; and

(3) The suspension volume for each eligible lease is its actual production from the field until cumulative production from all leases in the field entitled to share in the field-based suspension volume equals the suspension volume.

(f) If we reassign a well on an eligible lease to another field, the past production from that well:

(1) Will count toward the royalty suspension volume, if any, specified for the field to which it is reassigned; and

(2) Will not count toward the royalty suspension volume, if any, for the field from which it was reassigned.

Royalty Suspension (RS) Leases

§ 260.120 How do royalty suspension volumes apply to leases issued in a sale held after November 2000?

We may issue leases with royalty suspension volumes, as authorized in section 303 of the Act. For purposes of this section and §§ 260.121 through 260.124:

(a) Any volumes of production that are not normally royalty-bearing under the lease or the regulations (*e.g.*, fuel gas) do not count against royalty suspension volumes; and

(b) Production includes volumes allocated to a lease under an approved unit agreement.

§ 260.121 When does a lease issued in a sale held after November 2000 get a royalty suspension volume?

(a) We will specify any royalty suspension volume for your RS lease in the Notice of OCS Lease Sale published in the **Federal Register** for the sale in which you acquire the RS lease and will repeat it in the lease document. In addition:

(1) Your RS lease may produce royalty-free the royalty suspension volume we specify for your lease, even if the field to which we assign it is producing.

(2) No other leases in the field to which we assign your RS lease will share the royalty suspension volume we specify for your lease.

(b) You may apply for a supplemental royalty suspension volume for a project under 30 CFR part 203, if your lease lies:

(1) In the Gulf of Mexico,

(2) In water 200 meters or deeper, and

(3) Wholly west of 87 degrees, 30 minutes West longitude.

(c) Your RS lease retains the royalty suspension volume with which we issued it even if we deny your application for more relief.

§ 260.122 How long will a royalty suspension volume be effective for a lease issued in a sale held after November 2000?

The royalty suspension volume for your RS lease will continue through the end of the month in which cumulative production from your lease or project reaches the applicable royalty suspension volume or the lease period ends. Any production during a period when § 260.124(d) applies counts as part of your royalty suspension volume.

§ 260.123 How do I measure natural gas production for a lease issued in a sale held after November 2000?

You must measure natural gas production subject to the royalty suspension volume for your lease as follows: 5.62 thousand cubic feet of natural gas, measured according to 30 CFR part 250, subpart L, equals one barrel of oil equivalent.

§ 260.124 How will royalty suspension apply if MMS assigns a lease issued in a sale held after November 2000 to a field that has an eligible or pre-Act lease?

(a) We will assign your lease that has a qualifying well (under 30 CFR 250, subpart A) to an existing field or designate a new field and will notify you and other affected lessees in the field of that assignment.

(1) Within 30 days of the final notification, you or any of the other affected lessees may file a written request with the Director for reconsideration, accompanied by a Statement of Reasons.

(2) The Director will respond in writing either affirming or reversing the assignment decision. The Director's decision is final for DOI and is not subject to appeal to the Interior Board of Land Appeals under 30 CFR part 290 and 43 CFR part 4.

(b) If we establish a royalty suspension volume for a field, either as a result of an approved application for royalty relief submitted for a pre-Act lease under 30 CFR part 203 or as the result of production starting from one or more eligible leases in the field, then:

(1) Royalty-free production from your RS lease counts as part of any royalty suspension volume remaining for the field to which we assign your lease; and

(2) Your RS lease may continue to produce royalty-free up to the royalty suspension volume we specified for your lease, even if the field to which we assign your RS lease has produced all of its royalty suspension volume.

(c) Your lease may share in a suspension volume larger than the royalty suspension volume with which we issued it and to the extent we grant a larger volume in response to an application by a pre-Act lease submitted under 30 CFR part 203. To share in any larger royalty suspension volume, you must file an application described in § 203.83. In no case will royalty-free production for your RS lease be less than the royalty suspension volume specified for your lease.

(d) You must pay royalty on applicable production from your RS lease at the lease-stipulated royalty rate if average daily closing prices on the NYMEX rise above a base price for light sweet crude oil or natural gas that we have specified.

(1) We will specify the base price and applicable production for your lease in the Notice of OCS Lease Sale published in the **Federal Register** and will repeat it in the lease document.

(2) Applicable production:

(i) Is the production upon which royalties would otherwise be suspended; and

(ii) Counts as part of any remaining royalty suspension volume.

Bidding System Selection Criteria

§ 260.130 What criteria does MMS use for selecting bidding systems and bidding system components?

In analyzing the application of one of the bidding systems listed in § 260.110 to tracts selected for any OCS lease sale, we may, at our discretion, consider the following purposes and policies. We recognize that each of the purposes and policies may not be specifically applicable to the selection process for a particular bidding system or tract, or may present a conflict that we will have to resolve in the process of bidding system selection. The order of listing does not denote a ranking.

(a) Providing fair return to the Federal Government;

(b) Increasing competition;

(c) Ensuring competent and safe operations;

(d) Avoiding undue speculation;

(e) Avoiding unnecessary delays in exploration, development, and production;

(f) Discovering and recovering oil and gas;

(g) Developing new oil and gas resources in an efficient and timely manner;

(h) Limiting the administrative burdens on Government and industry; and

(i) Providing an opportunity to experiment with various bidding systems to enable us to identify those most appropriate for the satisfaction of the objectives of the United States in OCS lease sales.

Subpart C—[Reserved]

Subpart D—Joint Bidding

§ 260.301 What is the purpose of this subpart?

The purpose of this subpart is to encourage participation in OCS oil and gas lease sales by limiting the requirement for filing ''Statements of Production'' to certain joint bidders.

§ 260.302 What definitions apply to this subpart?

For the purposes of this subpart, all terms used are defined as in 30 CFR 256.40.

§ 260.303 What are the joint bidding requirements?

(a) You must file a Statement of Production with the Director, according to the requirements of 30 CFR 256.38 through 256.44 if:

(1) You submit a joint bid for any OCS oil and gas lease during a 6-month bidding period; and

(2) You were chargeable for the prior production period with an average daily production from all sources in excess of 1.6 million barrels of crude oil, natural gas equivalents, and liquefied petroleum products.

(b) The Statement of Production that you file under paragraph (a) of this section must state that you are chargeable for the prior production period with an average daily production in excess of the quantities listed in paragraph (a) of this section.

(c) If your average daily production in the prior production period met or exceeded the quantities specified in paragraph (a) of this section, you may not submit a joint bid for any OCS oil and gas lease during the applicable 6-month bidding period with any other person similarly chargeable. We will disqualify and reject these bids.

(d) If your average daily production in the prior production period met or exceeded the quantities specified in paragraph (a) of this section, you may not enter into an agreement that would result in two or more persons, similarly chargeable, acquiring or holding any interest in the tract for which the bid is submitted. We will disqualify and reject these bids.

[FR Doc. 00–23552 Filed 9–13–00; 8:45 am]

BILLING CODE 4310–MR–P

ENVIRONMENTAL PROTECTION AGENCY

40 CFR Part 63

[AD–FRL–6869–2]

RIN 2060–AJ09

National Emission Standards for Hazardous Air Pollutants: Aluminum Foundry and Aluminum Die Casting Operations; Source Category List

AGENCY: Environmental Protection Agency (EPA).

ACTION: Advance notice of proposed rule (ANPR).

SUMMARY: The Clean Air Act (CAA) requires EPA to list (for regulation under section 112 of the CAA) all categories of major sources of hazardous air pollutants (HAP) and categories of area sources if they present a threat of adverse effects to human health or the environment. We have recently promulgated national emission standards for hazardous air pollutants (NESHAP) for Secondary Aluminum Production, (65 FR 15690, March 23, 2000). This ANPR announces our intention to propose amendments to subpart RRR to remove aluminum foundries and aluminum die casting facilities from the Secondary Aluminum Production source category. As part of the same rulemaking, we intend to make a new determination concerning maximum achievable control technology (MACT) requirements for both major sources and area sources in these industries.

The EPA previously listed aluminum foundries and aluminum die casting facilities as part of the Secondary Aluminum Production source category and also listed area sources in these industries for regulation pursuant to CAA section 112(c)(6). Area sources are included in the NESHAP due to dioxin and furan emissions. We intend to make a new determination concerning MACT requirements deemed necessary and appropriate for all of these sources in the context of a new source category. Upon promulgation of a final rule removing these sources from subpart RRR and establishing separate MACT requirements for these sources. EPA will make conforming changes in the source category list. This ANPR solicits comments and information to be used in making a new determination concerning separate MACT requirements applicable to aluminum foundries and aluminum die casting facilities.

EFFECTIVE DATE: *Comments.* Comments must be received on or before October 16, 2000.

ADDRESSES: *Comments.* Comments should be submitted (in duplicate) to: Air and Radiation Docket and Information Center (6102), Attention: Docket No. A–2000–31, U.S. EPA, 1200 Pennsylvania Ave., NW, Washington, DC 20460.

Docket. Docket No. A–2000–31 is available for public inspection and copying from 8:00 a.m. to 5:30 p.m., Monday through Friday, at the EPA's Air and Radiation Docket and Information Center, Waterside Mall, Room M–1500, Ground Floor, 401 M Street SW, Washington, DC 20460. A reasonable fee may be charged for copying.

FOR FURTHER INFORMATION CONTACT: For information concerning this ANPR, contact Mr. Juan Santiago, Minerals and Inorganic Chemicals Group, Emission Standards Division (MD–13), U.S. EPA, Research Triangle Park, North Carolina 27711, (919) 541–1084, Santiago.Juan@EPA.gov.

SUPPLEMENTARY INFORMATION:

Electronic Submission of Comments

Comments may be submitted electronically by sending electronic mail (e-mail) to: a-and-r-docket@epamail.epa.gov. Electronic comments must be submitted as an ASCII file, avoiding the use of special characters and any form of encryption. Comments will also be accepted or diskette in Word Perfect 8.0 or ASCII file format. All comments in electronic form must be identified by the docket Number A–2000–31. No Confidential Business Information (CBI) should be submitted through e-mail. Electronic comments may be filed online at many Federal Depository Libraries.

Background

The CAA requires that EPA evaluate and control emissions of HAP. The control of HAP is achieved through promulgation of emission standards under section 112 of the CAA for sources that emit HAP. The CAA requires us to publish a list of all categories and subcategories of sources of HAP. We published an initial list of source categories on July 16, 1992 (57 FR 31576). This list was last revised on November 8, 1999 (63 FR 7155).

Secondary aluminum production facilities were listed as a source category emitting HAP in the initial list. Secondary aluminum production was

defined in the EPA Report, ''Documentation for Developing the Initial Source Category List'' to include any facility engaged in the cleaning, melting, refining, alloying, and pouring of aluminum recovered from scrap, foundry returns, and dross. We subsequently listed all area sources in the Secondary Aluminum Production source category pursuant to our obligation to regulate facilities that account for at least ninety percent of the nationwide emissions of certain dioxins and furans as required by section 112(c)(6) of the CAA (63 FR 17838, 17849, April 20, 1998).

The EPA promulgated NESHAP for the Secondary Aluminum Production source category on March 23, 2000 (65 FR 15690). As promulgated, the NESHAP apply to major and area source aluminum foundries and aluminum die casting facilities, except for those facilities that melt no materials other than clean charge and materials generated within the facility and that also do not operate a thermal chip dryer, sweat furnace or scrap dryer/delacquering kiln/decoating kiln.

The EPA based the NESHAP for aluminum foundries and aluminum die casting facilities, as well as its assessment of the economic impacts on small businesses in these industry segments, on information pertaining to representative facility practices in these industry segments. We believed that the information in the record supporting our NESHAP for secondary aluminum production facilities was representative of the operations and range of emissions at aluminum die casting facilities and aluminum foundries and sufficient to support the MACT requirements we adopted in those standards for them, although we did not have emissions data on dioxin and furan emissions specifically measured at aluminum foundries and die casting facilities.

However, affected aluminum foundry operators and die casters have expressed the view that the information and assumptions upon which we relied when we promulgated the Secondary Aluminum Production NESHAP may be incomplete or may not adequately represent the processes and emissions at such facilities. Accordingly, EPA made a commitment as part of the NESHAP for the Secondary Aluminum Production source category to initiate a formal process to collect further information from the facilities in these industries on the activities in which they engage and the potential of these activities to contribute to HAP emissions. EPA also published that, after evaluating this information, it would make a new determination concerning MACT requirements for both major sources and area sources in these industries. EPA has since entered into a settlement agreement in *American Foundrymen's Society, et al.* v. *EPA*, Civ. No. 00–1208 (D.C. Cir.) that effectuates this commitment in the preamble to the NEWHAP for the Secondary Aluminum Production source category.

This ANPR announces that EPA intends to undertake a new rulemaking to remove aluminum foundries and aluminum die casting facilities from subpart RRR and to develop alternate MACT requirements for these sources in the context of a separate source category. We intend to collect further information from these facilities using our authority under CAA section 114 and to make new determination concerning the MACT floor and any MACT requirements deemed necessary and appropriate for these facilities based on this information. Our intention to proceed with this new rulemaking is expressly contingent on our ability to collect information concerning the processes employed at these facilities and the associated emissions, sufficient both to fully support establishment of a separate MACT floor for such facilities and to resolve any remaining questions regarding the practicality, cost, and efficacy of potential emission controls.

In a separate action published elsewhere in this **Federal Register**, EPA is proposing a rule to stay the applicability of 40 CFR part 63, subpart RRR (the Secondary Aluminum Production NESHAP) to existing aluminum foundries and existing aluminum die casting facilities during the pendency of the rulemaking to make a new determination concerning alternate MACT requirements for these facilities. We intend to take final action concerning this proposed stay at the same time as we propose to remove aluminum foundries and aluminum die casting facilities from subpart RRR and to adopt alternate MACT requirements deemed necessary and appropriate for these facilities.

We anticipate that any MACT requirements deemed necessary and appropriate for major and area source aluminum foundries and aluminum die casting facilities which are currently regulated by subpart RRR will be proposed and adopted in the context of a proposed new source category. Whereas the EPA must establish MACT standards for major sources, aluminum foundries and aluminum die casting facilities that are area sources may not require such standards if existing and new data support such a conclusion. The EPA will take final action on its proposal to remove such facilities from subpart RRR at the same time as it promulgates any new MACT requirements for such facilities. The EPA will then make any necessary conforming changes in the source category list.

Any proposed rule to adopt an alternative NESHAP for aluminum foundries and die casters will provide affected facilities with a reasonable amount of time after the effective date of the promulgated standards, and in no event less than one year, to come into compliance with the final standards. Aluminum foundries and die casters will also have a reasonable amount of time to come into compliance with the existing NESHAP for secondary aluminum production should EPA elect not to issue a proposed rule to remove aluminum foundries and die casters from 40 CFR part 63, subpart RRR.

This ANPR solicits comments and information pertaining to our intention to develop alternate MACT requirements for major sources and area sources in the aluminum foundry and aluminum die casting industries. We are seeking comment concerning our intent to remove these facilities from the Secondary Aluminum Production NESHAP and the advantages and disadvantages of regulating aluminum foundries and aluminum die casting facilities as a separate category.

The EPA is also seeking specific information pertaining to aluminum foundry and aluminum die casting processes and emissions which may be pertinent to evaluating the practicality, cost, and efficacy of alternate MACT requirements for such facilities. Such information includes descriptions of aluminum foundry and aluminum die casting processes; the types and quantities of contaminated (i.e., containing oils and coatings) scrap that is processed at these facilities; the number of facilities that process only clean materials (*e.g.,* ingots) and use reactive fluxes in lower quantities than the major source threshold (10 tons per year (tpy) of any single HAP or 25 tpy of all HAP combined); the number of major sources of HAP emissions; the number of area sources; and the extent of emissions of dioxins and furans at major and area sources. We also seek information on the magnitude of HAP emissions and methods of HAP emission estimation, emission controls and their costs, and any existing State or local regulations for HAP that may apply to aluminum foundries and aluminum die casting facilities. We invite trade groups associated with aluminum foundries and aluminum die casting facilities to provide information

and participate in the regulatory development process. As part of the information gathering process, EPA intends to issue an information collection request to the individual companies and plants which will seek site-specific information in these and other areas.

Administrative Requirements

Because this ANPR is not a rule or a proposed rule, the EPA has not prepared an economic impact analysis pursuant to section 317 of the CAA, a regulatory flexibility analysis pursuant to the Regulatory Flexibility Act, or a written statement under section 202 of the unfunded Mandates Act of 1995. Also, this ANPR does not contain any information collection requirements and, therefore, is not subject to the Paperwork Reduction Act.

Under Executive Order 12866 (58 FR 5173, October 4, 1993), the EPA must determine whether a regulatory action is ''significant'' and, therefore, subject to Office of Management and Budget (OMB) review and the requirements of the Executive Order. The Executive Order defines ''significant regulatory action'' as one that is likely to result in standards that may:

(1) Have an annual effect on the economy of $100 milliion or more or adversely affect, in a material way, the economy, a sector of the economy, productivity, competition, jobs, the environment, public health or safety, or State, local, or tribal governments or communities;

(2) Create a serious inconsistency or otherwise interfere with an action taken or planned by another agency;

(3) Materially alter the budgetary impact of entitlement, grants, user fees, or loan programs or the rights and obligations of recipients thereof; or

(4) Raise novel legal or policy issues arising out of legal mandates, the President's priorities, or the principles set forth in the Executive order.

OMB has determined that this proposed advance notice of proposed rulemaking is a ''significant regulatory action'' because of novel legal or policy reasons. As such, this action was submitted to OMB for review.

Dated: September 8, 2000.

Carol M. Browner,

Administrator.

[FR Doc. 00–23644 Filed 9–13–00; 8:45 am]

BILLING CODE 6560–50–M

ENVIRONMENTAL PROTECTION AGENCY

40 CFR Part 63

[AD–FRL–6869–3]

RIN 2060–AJ11

National Emission Standards for Hazardous Air Pollutants: Secondary Aluminum Production

AGENCY: Environmental Protection Agency (EPA).

ACTION: Proposed rule; applicability stay.

SUMMARY: In this action, EPA is proposing a rule to stay the applicability of the national emission standards for hazardous air pollutants (NESHAP) for Secondary Aluminum Production, as applied to aluminum foundries and aluminum die casting facilities during the pendency of a separate rulemaking to adopt alternate MACT requirements for these sources. The EPA intends to take final action concerning this proposed stay at the same time as it proposes to remove aluminum foundries and aluminum die casting facilities from the present secondary aluminum standard and to adopt alternate MACT requirements deemed necessary and appropriate for these sources.

In an advance notice of proposed rulemaking (ANPR) published elsewhere in this **Federal Register**, EPA is announcing its intention to propose amendments to the NESHAP for Secondary Aluminum Production to remove aluminum foundries and aluminum die casting facilities from those standards and to make a new determination concerning maximum achievable control technology (MACT) requirements for major sources and area sources in these industries.

DATES: *Comments.* Comments must be received on or before October 16, 2000.

ADDRESSES: *Comments.* Comments should be submitted (in duplicate, if possible) to: Air and Radiation Docket and Information Center (6102), Attention: Docket No. A–2000–35, U.S. EPA, 1200 Pennsylvania Ave., NW, Washington, DC 20460. We request that a separate copy of each public comment be sent to the contact person listed below (see **FOR FURTHER INFORMATION CONTACT**).

Docket. Docket No. A–2000–35 is available for public inspection and copying from 8:30 a.m. to 5:30 p.m., Monday through Friday (except for Federal holidays), at the EPA's Air and Radiation Docket and Information Center, Waterside Mall, Room M–1500, Ground Floor, 401 M Street SW, Washington, DC 20460. A reasonable fee may be charged for copying docket items.

FOR FURTHER INFORMATION CONTACT: For information concerning this proposed rule, contact Mr. Juan Santiago, Minerals and Inorganic Chemicals Group, Emission Standards Division (MD–13), U.S. EPA, Research Triangle Park, North Carolina 27711, (919) 541–1084, Santiago.Juan@EPA.gov.

SUPPLEMENTARY INFORMATION:

Comments

Comments and data may be submitted by electronic mail (e-mail) to: a-and-r-docket@epa.gov. Electronic comments must be submitted as an ASCII file to avoid the use of special characters and encryption problems and will also be accepted on disks in WordPerfect(TM) version 5.1, 6.1 or Corel 8 file format. All comments and data submitted in electronic form must note the docket number: A–2000–35. No confidential business information (CBI) should be submitted by e-mail. Electronic comments may be filed online at many Federal Depository Libraries.

Commenters wishing to submit proprietary information for consideration must clearly distinguish such information from other comments and clearly label it as CBI. Send submissions containing such proprietary information directly to the following address, and not to the public docket, to ensure that proprietary information is not inadvertently placed in the docket: Attention: Juan Santiago, U.S. EPA, c/o OAQPS Document Control Officer, 411 W. Chapel Hill Street, Room 740B, Durham, NC 27701. The EPA will disclose information identified as CBI only to the extent allowed by the procedures set forth in 40 CFR part 2. If no claim of confidentiality accompanies a submission when it is received by the EPA, the information may be made available to the public without further notice to the commenter.

Regulated Entities

The regulated category and entities affected by this action include:

Category	NAICS Code	SIC Code	Examples of regulated entities
Industry	331521 331524	3363 3365	Aluminum die casting facilities. Aluminum foundry facilities.

This table is not intended to be exhaustive, but rather provides a guide for readers regarding entities likely to be affected by this action. This table lists the types of entities that the Agency is now aware could potentially be affected by this action. If you have questions regarding the applicability of this proposed stay to a particular entity, consult the person listed in the preceding **FOR FURTHER INFORMATION CONTACT** section.

Outline

The information presented in this preamble is organized as follows:

I. What are we proposing?
II. Why are we taking this action?
III. Whom would this stay affect?
IV. What related actions is EPA undertaking?
V. What are the administrative requirements for this stay?
A. Execytuve Irder 12866, Regulatory Planning and Review
B. Executive Order 13132, Federalism
C. Executive Order 13084, Consultation and Coordination with Indian Tribal Governments
D. Executive Order 13045, Protection of Children from Environmental Health Risks and Safety Risks
E. Unfunded Mandates Reform Act of 1995
F. Regulatory Flexibility Act (RFA), as Amended by the Small Business Regulatory Enforcement Fairness Act of 1996 (SBREFA), 5 U.S.C 601 *et seq.*
G. Paperwork Reduction Act
H. National Technology Transfer and Advancement Act

I. What are we proposing?

Aluminum foundries and aluminum die casting facilities are subject to the current NESHAP for Secondary Aluminum Production, 40 CFR part 63, subpart RRR. We are proposing to stay the applicability of subpart RRR to sources in the aluminum foundry and aluminum die casting industries during the pendency of a new rulemaking to remove these sources from subpart RRR and to adopt alternate MACT requirements deemed necessary and appropriate for such sources.

II. Why are we taking this action?

The EPA promulgated the NESHAP for the Secondary Aluminum Production source category on March 23, 2000 (65 FR 15690). As promulgated, these standards apply to major and area source aluminum foundries and aluminum die casting facilities, except for those facilities that melt no materials other than clean charge and materials generated within the facility and that also do not operate a thermal chip dryer, sweat furnace or scrap dryer/delacquering kiln/decoating kiln.

The EPA based the NESHAP for aluminum foundries and aluminum die casting facilities, as well as its assessment of the economic impacts on small businesses in these industry segments, on information pertaining to representative facility practices in these industry segments. We believed that the information in the record supporting our NESHAP for secondary aluminum production facilities was representative of the operations and range of emissions at aluminum die casting facilities and aluminum foundries and sufficient to support the MACT requirements we adopted in those standards for them, although we did not have emissions data on dioxin and furan emissions specifically measured at aluminum foundries and die casting facilities.

However, affected aluminum foundry operators and die casters have expressed the view that the information and assumptions upon which we relied when we promulgated the Secondary Aluminum Production NESHAP may be incomplete or may not adequately represent the processes and emissions at such facilities. Accordingly, EPA made a commitment as part of the NESHAP for the Secondary Aluminum Production source category to initiate a formal process to collect further information from the facilities in these industries on the activities in which they engage and the potential of these activities to contribute to HAP emissions. EPA also published that, after evaluating this information, it would make a new determination concerning MACT requirements for both major sources and area sources in these industries. EPA has since entered into a settlement agreement in *American Foundrymen's Society, et al.* v *EPA,* Civ. No. 00–1208 (D.C. Cir.) that effectuates this commitment in the preamble to the NESHAP for the Secondary Aluminum Production source category.

The EPA intends to undertake a new rulemaking to remove aluminum foundries and aluminum die casting facilities from subpart RRR and to make a new determination concerning alternate MACT requirements deemed necessary and appropriate for these sources in the context of a separate source category. We intend to collect further information from these facilities using our authority under CAA section 114 and to make a new determination concerning the MACT floor and any MACT requirements deemed necessary and appropriate for these facilities based on this information. Our intention to proceed with this new MACT rulemaking is expressly contingent on our ability to collect information concerning the processes employed at these facilities and the associated emissions, sufficient both to fully support establishment of a separate MACT floor for such facilities and to resolve any remaining questions regarding the practicality, cost, and efficacy of potential emission controls.

In this action, EPA is proposing a rule to stay the applicability of subpart RRR to aluminum foundries and aluminum die casting facilities during the pendency of the rulemaking to make a new determination concerning alternative MACT requirements for these facilities. We intend to take final action concerning this proposed stay at the same time as we propose to remove aluminum foundries and aluminum die casting facilities from subpart RRR and to adopt alternative MACT requirements deemed necessary and appropriate for these facilities.

The EPA is proposing this applicability stay because it would make no sense to require major and area sources at aluminum foundries and aluminum die casting facilities to continue to plan for compliance with the existing provisions of subpart RRR once EPA has made a new determination of MACT requirements for these facilities and has proposed to remove these facilities from subpart RRR. Assuming that the information collection process can proceed expeditiously, we believe that a new MACT floor for these facilities can be determined and alternate MACT requirements deemed necessary and appropriate for affected sources can be proposed before any facility would be legally obligated to comply with the substantive controls required by subpart RRR.

Any proposed rule to adopt an alternative NESHAP for aluminum foundries and die casters will provide affected facilities with a reasonable amount of time after the effective date of the promulgated standards, and in no event less than one year, to come into compliance with the final standards.

Aluminum foundries and die casters will also have a reasonable amount of time to come into compliance with the existing NESHAP for secondary aluminum production should EPA elect not to issue a proposed rule to remove aluminum foundries and die casters from 40 CFR part 63, subpart RRR.

III. Whom would this stay affect?

When finalized, this proposed stay would affect those aluminum die casting facilities and aluminum foundry facilities to which 40 CFR part 63, subpart RRR, presently applies. Specifically, this proposed stay would affect existing aluminum die casting facilities and aluminum foundry facilities that meet either, or both, of the following descriptions:

- Facilities that melt materials other than clean charge and other than materials generated within the facility;
- Facilities that operate a thermal chip dryer, sweat furnace, or scrap dryer/delacquering kiln/decoating kiln.

For the purposes of this proposed stay, aluminum die casting facility means a facility that receives molten aluminum or melts solid aluminum, such as aluminum ingots, billets, and/or scrap, and pours or injects the molten metal into a permanent die to produce a casting. Aluminum foundry facility means a facility that receives molten aluminum or melts solid aluminum, such as aluminum ingots, billets, and/or scrap, and pours molten metal into a mold to produce a casting.

IV. What related actions is EPA undertaking?

In an ANPR published elsewhere in this **Federal Register**, EPA is announcing its intention to propose amendments to the Secondary Aluminum Production NESHAP, 40 CFR part 63, subpart RRR, to remove aluminum foundries and aluminum die casting facilities from that NESHAP and to make a new determination concerning MACT requirements for major sources and area sources in these industries.

In order to gather information supporting the new determination concerning alternate MACT requirements for aluminum foundries and aluminum die casting facilities, we intend to collect additional information from individual companies and facilities on site-specific operating practices, emissions, emission control devices, emission control costs and applicable regulations, utilizing our authority under CAA section 114. The EPA will seek approval for this information collection effort from the Office of Management and Budget (OMB) pursuant to the provisions of the Paperwork Reduction Act.

V. What Are the Administrative Requirements for This Stay?

A. Executive Order 12866, Regulatory Planning and Review

Under Executive Order 12866 (58 FR 51735, October 4, 1993), EPA must determine whether the regulatory action is ''significant'' and therefore subject to OMB review and the requirements of the Executive Order. The Executive Order defines ''significant regulatory action'' as one that is likely to result in a rule that may:

(1) Have an annual effect on the economy of $100 million or more or adversely affect in a material way the economy, a sector of the economy, productivity, competition, jobs, the environment, public health or safety, or State, local, or tribal governments or communities;

(2) Create a serious inconsistency or otherwise interfere with an action taken or planned by another agency;

(3) Materially alter the budgetary impact of entitlements, grants, user fees, or loan programs, or the rights and obligations of recipients thereof; or

(4) Raise novel legal or policy issues arising out of legal mandates, the President's priorities, or the principles set forth in the Executive Order.

OMB has determined that this proposed rule is a ''significant regulatory action'' because of novel legal or policy reasons. As such, this action was submitted to OMB for review.

B. Executive Order 13132, Federalism

Executive Order 13132 (64 FR 43255, August 10, 1999) requires EPA to develop an accountable process to ensure ''meaningful and timely input by State and local officials in the development of regulatory policies that have federalism implications.'' ''Policies that have federalism implications'' is defined in the Executive Order to include regulations that have ''substantial direct effects on the States, on the relationship between the national government and the States, or on the distribution of power and responsibilities among the various levels of government.'' Under Executive Order 13132, EPA may not issue a regulation that has federalism implications, that imposes substantial direct compliance costs, and that is not required by statute, unless the Federal government provides the funds necessary to pay the direct compliance costs incurred by State and local governments, or EPA consults with State and local officials early in the process of developing the proposed regulation. The EPA also may not issue a regulation that has federalism implications and that preempts State law unless the Agency consults with State and local officials early in the process of developing the proposed regulation.

If EPA complies by consulting, Executive Order 13132 requires EPA to provide to OMB, in a separately identified section of the preamble to the rule, a federalism summary impact statement (FSIS). The FSIS must include a description of the extent of EPA's prior consultation with State and local officials, a summary of the nature of their concerns and EPA's position supporting the need to issue the regulation, and a statement of the extent to which the concerns of State and local officials have been met. Also, when EPA transmits a draft final rule with federalism implications to OMB for review pursuant to Executive Order 12866, EPA must include a certification from the Agency's Federalism Official stating that EPA has met the requirements of Executive Order 13132 in a meaningful and timely manner.

Today's proposed stay will not have substantial direct effects on the States, on the relationship between the national government and the States, or on the distribution of power and responsibilities among the various levels of government, as specified in Executive Order 13132, because State and local governments do not own or operate any sources that would be subject to his proposed stay. Thus, the requirements of section 6 of the Executive Order do not apply to today's action.

C. Executive Order 13084, Consultation and Coordination With Indian Tribal Governments

Under Executive Order 13084, EPA may not issue a regulation that is not required by statute, that significantly or uniquely affects the communities of Indian tribal governments, and that imposes substantial direct compliance costs on those communities, unless the Federal government provides the funds necessary to pay the direct compliance costs incurred by the tribal governments, or EPA consults with those governments. If EPA complies by consulting, Executive Order 13084 requires EPA to provide to OMB, in a separately identified section of the preamble to the rule, a description of the extent of EPA's prior consultation with representatives of affected tribal governments, a summary of the nature of their concerns, and a statement supporting the need to issue the

regulation. In addition, Executive Order 13084 requires EPA to develop an effective process permitting elected and other representatives of Indian tribal governments ''to provide meaningful and timely input in the development of regulatory policies on matters that significantly or uniquely affect their communities.''

Today's proposed stay does not significantly or uniquely affect the communities of Indian tribal governments. No tribal governments own or operate sources subject to this proposed stay. Accordingly, the requirements of section 3(b) of Executive Order 13084 do not apply to today's action.

D. Executive Order 13045, Protection of Children From Environmental Health Risks and Safety Risks

Executive Order 13045 (62 FR 19885, April 23, 1997) applies to any rule that: (1) Is determined to be ''economically significant'' as defined under Executive Order 12866, and (2) concerns an environmental health or safety risk that EPA has reason to believe may have a disproportionate effect on children. If the regulatory action meets both criteria, EPA must evaluate the environmental health or safety effects of the planned rule on children, and explain why the planned regulation is preferable to other potentially effective and reasonably feasible alternatives considered by EPA.

The EPA interprets Executive Order 13045 as applying only to those regulatory actions that are based on health or safety risks, such that the analysis required under section 5–501 of the Executive Order has the potential to influence the regulation. Today's proposed stay is not subject to Executive Order 13045 because it is based on technology performance, not health or safety risks. Furthermore, this proposed rule has been determined not to be ''economically significant'' as defined under Executive Order 12866.

E. Unfunded Mandates Reform Act of 1995

Title II of the Unfunded Mandates Reform Act of 1995 (UMRA), Pub. L. 104–4, establishes requirements for Federal agencies to assess the effects of their regulatory actions on State, local, and tribal governments and the private sector. Under section 202 of the UMRA, EPA generally must prepare a written statement, including a cost-benefit analysis, for proposed and final rules with Federal mandates that may result in expenditures by State, local, and tribal governments, in aggregate, or by the private sector, of $100 million or more in any 1 year. Before promulgating an EPA rule for which a written statement is needed, section 205 of the UMRA generally requires EPA to identify and consider a reasonable number of regulatory alternatives and adopt the least-costly, most cost-effective, or least burdensome alternative that achieves the objectives of the rule. The provisions of section 205 do not apply when they are inconsistent with applicable law. Moreover, section 205 allows EPA to adopt an alternative other than the least-costly, most cost effective, or least-burdensome alternative if the Administrator publishes with the final rule an explanation why that alternative was not adopted. Before EPA establishes any regulatory requirements that may significantly or uniquely affect small governments, including tribal governments, it must have developed under section 203 of the UMRA a small government agency plan. The plan must provide for notifying potentially affected small governments to have meaningful and timely input in the development of EPA regulatory proposals with significant Federal intergovernmental mandates, and informing, educating, and advising small governments on compliance with the regulatory requirements.

The EPA has determined that the proposed stay does not contain a Federal mandate that may result in expenditures of $100 million or more for State, local, or tribal governments, in the aggregate, or the private sector in any 1 year. The maximum total annual cost of the Secondary Aluminum Production NESHAP for any year has been estimated to be approximately $76.7 million (65 FR 15690, March 23, 2000), and today's proposed stay does not add new requirements that would increase this cost. Thus, today's proposed stay is not subject to the requirements of sections 202 and 205 of the UMRA. In addition, EPA has determined that this proposed stay contains no regulatory requirements that might significantly or uniquely affect small governments because it contains no requirements that apply to such governments or impose obligations upon them. Therefore, today's proposed stay is not subject to the requirements of section 203 of the UMRA.

F. Regulatory Flexibility Act (RFA), as Amended by the Small Business Regulatory Enforcement Fairness Act of 1996 (SBREFA), 5 U.S.C. 601 et seq.

The RFA generally requires an agency to prepare a regulatory flexibility analysis of any rule subject to notice and comment rulemaking requirements under the Administrative Procedure Act or any other statute unless the agency certifies that the rule will not have a significant economic impact on a substantial number of small entities. Small entities include small businesses, small organizations, and small governmental jurisdictions.

For purposes of assessing the impacts of today's proposed stay on small entities, a small entity is defined as: (1) A small business in SIC code 3363 or 3365 that has as many as 500 employees; (2) a small governmental jurisdiction that is a government of a city, county, town, school district or special district with a population of less than 50,000; and (3) a small organization that is any not-for-profit enterprise which is independently owned and operated and is not dominant in its field.

After considering the economic impacts of today's proposed stay on small entities, I certify that this action will not have a significant economic impact on a substantial number of small entities. The EPA has determined that none of the small entities will experience a significant impact because the proposed stay imposes no additional regulatory requirements on owners or operators of affected sources.

G. Paperwork Reduction Act

The OMB has approved the information collection requirements contained in the Secondary Aluminum Production NESHAP under the provisions of the Paperwork Reduction Act, 44 U.S.C. 3501 *et seq.* and has assigned OMB control No. 2060–0433. An Information Collection Request (ICR) document has been prepared by EPA (ICR No. 1894.01), and a copy may be obtained from Sandy Farmer by mail at U.S. EPA, Office of Environmental Information, Collection Strategies Division (2822), 1200 Pennsylvania Avenue, NW, Washington DC 20460, by email at farmer.sandy@epa.gov, or by calling (202) 260–2740. Today's proposed stay of the NESHAP will not increase the information collection burden estimates made previously.

H. National Technology Transfer and Advancement Act

Section 12(d) of the National Technology Transfer and Advancement Act (NTTAA), Public Law 104–113 (March 7, 1996), directs all Federal agencies to use voluntary consensus standards instead of government-unique standards in their regulatory activities unless to do so would be inconsistent with applicable law or otherwise impractical. Voluntary consensus standards are technical standards (e.g., material specifications, test methods,

sampling and analytical procedures, and business practices) that are developed or adopted by one or more voluntary consensus bodies. Examples of organizations generally regarded as voluntary consensus standards bodies include the American Society for Testing and Materials (ASTM), the National Fire Protection Association (NFPA), and the Society of Automotive Engineers (SAE). The NTTAA requires Federal agencies like EPA to provide Congress, through OMB, with explanations when an agency does not use available and applicable voluntary consensus standards.

The proposed stay does not involve the proposal of any new technical standards or incorporate by reference existing technical standards.

Dated: September 8, 2000.

Carol M. Browner,

Administrator.

[FR Doc. 00–23643 Filed 9–13–00; 8:45 am]

BILLING CODE 6560–50–P

DEPARTMENT OF COMMERCE

National Oceanic and Atmospheric Administration

50 CFR Part 660

[Docket 000301054-0227-02; I.D. 053000D]

RIN 0648-AN27

Fisheries off West Coast States and in the Western Pacific; Pacific Coast Groundfish Fishery; Groundfish Observer Program

AGENCY: National Marine Fisheries Service (NMFS), National Oceanic and Atmospheric Administration (NOAA), Commerce.

ACTION: Proposed rule: request for comments.

SUMMARY: NMFS proposes to amend the regulations implementing the Pacific Coast Groundfish Fishery Management Plan (FMP) to provide for an at-sea observation program on all limited entry and open access catcher vessels. This proposed rule would require vessels in the groundfish fishery to carry observers when notified by NMFS or its designated agent; establish notification requirements for vessels that may be required to carry observers, and establish responsibilities and define prohibited actions for vessels that are required to carry observers. The at-sea observation program is intended to improve estimates of total catch and fishing mortality.

DATES: Comments on this proposed rule must be received by October 16, 2000.

ADDRESSES: Send comments to William Stelle, Jr., Administrator, Northwest Region, NMFS, 7600 Sand Point Way N.E., BIN C15700, Bldg. 1, Seattle, WA 98115-0070. Comments also may be sent via facsimile (fax) to 206-526-6736. Comments will not be accepted if submitted via e-mail or Internet. Copies of the Environmental Assessment/Regulatory Impact Review/Initial Regulatory Flexibility Analysis (IRFA) may be obtained from the Pacific Fishery Management Council (Council) by writing to the Council at 2130 SW Fifth Avenue, Suite 224, Portland OR 97201, or by contacting Don McIsaac at 503-326-6352, or may be obtained from William L. Robinson, Northwest Region, NMFS, 7600 Sand Point Way N.E., BIN C15700, Bldg. 1, Seattle, WA 98115-0070. Send comments regarding the reporting burden estimate or any other aspect of the collection-of-information requirements in this proposed rule to the NMFS address and to the Office of Information and Regulatory Affairs, Office of Management and Budget (OMB), Washington, D.C. 00503 (Attn: NOAA Desk Officer). Send comments regarding any ambiguity or unnecessary complexity arising from the language used in this rule to William Stelle, Jr.

FOR FURTHER INFORMATION CONTACT: William L. Robinson, Northwest Region, NMFS, 206-526-6140; fax: 206-526-6736 and e-mail: bill.robinson@noaa.gov or Svein Fougner, Southwest Region, NMFS, 562-980-4000; fax: 562-980-4047 and e-mail: svein.fougner@noaa.gov.

Electonic Access: This proposed rule also is accessible via the Internet at the Office of the Federal Register's website at http://www.access.gpo.gov/su—docs/aces/aces140.html.

SUPPLEMENTARY INFORMATION: The U.S. groundfish fisheries off the Washington, Oregon, and California coasts are managed pursuant to the Magnuson Stevens Fishery Conservation and Management Act (Magnuson-Stevens Act)(16 U.S.C. 1801-1883) and the Pacific Coast Groundfish FMP. Regulations implementing the FMP appear at 50 CFR part 660, subpart G. The Magnuson-Stevens Act at 16 U.S.C. 1853(b)(8) provides that an FMP may require that one or more observers (50 CFR 600.10) be carried onboard a vessel of the United States engaged in fishing for species that are subject to the FMP, for the purpose of collecting data necessary for the conservation and management of the fishery. The Pacific Coast Groundfish FMP provides that all fishing vessels operating in the groundfish fishery may be required to accommodate on board observers for purposes of collecting scientific data. Under the Magnuson-Stevens Act at 16 U.S.C. 1855(d), the Secretary of Commerce, acting through NMFS, has general responsibility to carry out any fishery management plan, and may promulgate such regulations as may be necessary to discharge this responsibility.

With the exception of the mid-water trawl fishery for Pacific whiting, most groundfish vessels sort their catch at sea and discard species that are in excess of cumulative trip limits, unmarketable, in excess of annual allocations, or incidentally caught non-groundfish species. Landed or retained catch is monitored by individual state fish ticket programs in Washington, Oregon, and California. However, because a portion of the catch is discarded at sea, there is no opportunity for NMFS or the states to monitor total catch (retained plus discarded catch) at onshore processing facilities. This lack of information on at-sea discards has resulted in imprecise estimates of total catch and fishing mortality.

Discard information is needed to assess and account for total fishing mortality and to evaluate management measures, including rebuilding plans for overfished stocks. Discard estimates based on limited studies conducted in the mid-1980's, and information on species compositions in landings, are available for some groundfish species. For other species there is little or no discard information. During the past decade, there have been significant reductions in cumulative trip limits, and trip limits have been applied to increasing numbers of species. In light of these changes in the regulatory regime, doubt has been raised about the old discard estimates, which were based on data collected in the 1980's. Accurate estimates of discards are essential to computing total catch, and thus are an important component of any fishery conservation and management program. If the discard estimates are too high, harvest allocations may be set too low; if discard estimates are too low, then harvest allocations may be set too high, and the long-term health of the stock may be jeopardized.

The Pacific Coast Groundfish FMP was developed by the Council and approved by NMFS in 1982. Since the early 1990's, the Council has regarded at-sea observers as a viable means to collect much-needed data. The Council's Groundfish Management Team has continually stressed the need for an on-board observer program to accurately assess total catch. Observers have been placed on a voluntary basis aboard offshore processing vessels (catcher/processors and motherships) in

the Pacific whiting fishery since 1991. From 1995 to 1998, a small number of groundfish trawl vessels participating in the Oregon Enhanced Data Collection research project voluntarily carried observers to monitor trip limit-induced discards and the bycatch of prohibited species. At its April 1999 meeting, the Council proposed development of an on-board observer program for all limited entry and open access vessels, with the goal of having a program ready for implementation in 2000, if funding became available. At this same meeting, the Council agreed to consider the development of a regulatory program to support a mandatory observer program in the recreational charter boat fleet. Such a program would be addressed in a separate rulemaking. Regulations to support an observer program in the at-sea processing sector of the Pacific whiting fishery also will be submitted separately.

Observers are a uniformly trained group of qualified technicians. They are stationed aboard vessels to gather conservation and management data that are too burdensome for vessel personnel to collect, and which would otherwise not be available for managing the fisheries or assessing interactions with non-groundfish species. The purposes of this rulemaking are to establish the obligations of vessels that will be required to carry observers; to safeguard the observers' well-being; and to provide for sampling conditions necessary for an observer to follow scientific sampling protocols and thereby maintain the integrity of observer data collections. Nationwide regulations addressing vessels with conditions that are unsafe or inadequate for purposes of carrying an observer are found at 50 CFR 600.746. Nationwide regulations applicable to observers are also found under ''General Prohibitions'' at 50 CFR 600.725 (o), (r), (s), (t), and (u).

Biological Impacts

The regulations proposed would have no direct biological or physical impacts on the environment. However, they would provide, in the long term, a positive biological effect. Data collected by observers would improve the quantity and quality of data available for stock assessments. The collected data also would provide fisheries managers with information needed to minimize the risks of overfishing groundfish and non-groundfish species, and to develop effective rebuilding plans for depleted stocks.

Socio-economic Impacts

If the observer program receives $2 million of funding annually, 15-20 observers could be deployed each year. With this level of funding, NMFS's would provide observer training and pay the direct costs of deploying observers including salaries, payroll taxes, employment insurance, medical insurance, pension, and travel costs. Observers would be employed directly by NMFS or through a NMFS procurement contract. The observers' employer would be required to provide protection and indemnity insurance to cover bodily injury or property damage claims that may result from actions of the observer.

Each vessel within the sector(s) of the groundfish fleet designated for coverage would be required to carry an observer when notified by NMFS or its designated agent, and to keep NMFS or its designated agent informed of its fishing schedule, including anticipated departure dates and times. Additional time would be required in port for selected vessels to arrange for the required observer coverage. Vessels that are selected to carry an observer would be responsible for providing living quarters and food equivalent to that which is provided to the crew. Some of the smallest groundfish vessels may find that crew members are displaced because limited bunk space must be allocated to the observer.

Observers may be expected to perform multiple duties including estimating total catch, sampling for catch and discard species composition, collecting biological data and specimens, and collecting data on interactions with non-groundfish species, the operation and characteristics of the vessel, and fishing effort. To allow the observer to follow sampling protocols, vessels will need to provide adequate sampling facilities and unobstructed access to catch. This may result in minimal increased handling time if sorting of the catch needs to be slowed or centralized to allow an observer to collect samples. Space requirements for analyzing and storing samples may reduce the available work and storage space for vessel activities. It is likely that the smallest groundfish vessels would be most affected by space requirements. However, without minimal sample space, data quality cannot be assured. If it is determined that a class of vessel is too small to accommodate an observer, alternative sampling, observation or monitoring methods may need to be considered by NMFS.

The safety, health, and well-being of observers while stationed aboard fishing vessels is of the utmost importance. Accordingly, observer health and safety provisions at 50 CFR 600.725 and 600.746 will apply. Should a vessel fail to meet the requirements at 50 CFR 600.746, the vessel would not be permitted to fish until NMFS determined that the safety requirements were met and the required observer was aboard. The trip-limit management regime, currently used in most Pacific Coast groundfish fisheries, generally applies over one or 2-month periods. Therefore, lost catch opportunity is unlikely if the vessel is delayed. However, in derby-style fisheries, such as the three-tiered sablefish fishery, lost catch opportunity may result if the vessel is delayed. Advance planning would allow vessels to correct minor problems without delaying the fishing trip.

Classification

NMFS prepared an IRFA that describes the impact this proposed rule, if adopted, would have on small entities. The IRFA is intended to aid the agency in considering all reasonable regulatory alternatives that would minimize the economic impact on affected small entities. A copy of this analysis is available from the NMFS or the Council (see **ADDRESSES**).

Impacts of this proposed rulemaking on the individual vessel depend on the nature and size of the program and the coverage approach that is chosen—all vessels in the groundfish fleet or a small portion of the vessels. If 20 observers are deployed annually, the number of vessels that could potentially carry an observer is estimated to range between 60 (3 percent of all small entities) and 967 (46 percent of all small entities). A smaller number of vessels could be affected if the coverage strategy is for each observer to sample only one limited entry vessel over an entire cumulative trip limit period, then when the coverage strategy is for observers to sample all open access and limited entry vessel trips at random, assuming a vessel carries an observer for no more than one trip. The costs to the individual vessel are expected to range between $157 and $3334, depending on the coverage strategy and the number of days fished per year. An upper value of $11,044 per vessel is an extreme that would only occur if a vessel fished every day of the year and carried an observer at all times. It is most likely that the open access and limited entry groundfish fleets would be divided into sectors based on criteria such as gear type, fishing period, geographical location, or fishing strategy. Each sector may be required to have a different level

of observer coverage. Sectors with the greatest annual catch of groundfish or those that most frequently interact with priority species, for which there is a serious need for information, could be required to have a substantially higher proportion of observer coverage than the other sectors.

The analysis assumes that only vessels that carry an observer would bear the burden. Among the 2,116 vessels in the open access and limited entry groundfish fisheries that could be selected to bear the cost to carry an observer, there are substantial differences in terms of the annual ex-vessel value of their catch, and therefore in the burden imposed.

This proposed rule contains collection-of-information requirements subject to review and approval by the Office of Management and Budget (OMB) under the Paperwork Reduction Act (PRA). These requirements has been submitted to OMB for approval. Public reporting burden for these collections of information is estimated to average 5 minutes to make a toll-free call to provide either notification of departure on a fishing trip or notification of intent to cease participating in the fishery. This estimate includes the time for reviewing instructions, searching existing data sources, gathering and maintaining the data needed, and completing and reviewing the collection of information.

Public comment is sought regarding: whether this proposed collections of information are necessary for the proper performance of the functions of the agency, including whether the information shall have practical utility, the accuracy of the burden estimate, ways to enhance the quality, utility, and clarity of the information to be collected, and ways to minimize the burden of the collection of information, including through the use of automated collection techniques or other forms of information technology. Send comments on these or any other aspects of the collection of information to NMFS (see **ADDRESSES**) and to OMB (Attn: NOAA Desk Officer).

Notwithstanding any other provision of the law, no person is required to respond to, nor shall a person be subject to a penalty for failure to comply with, a collection of information subject to the requirements of the PRA, unless that collection of information displays a currently valid OMB Control Number. NMFS issued Biological Opinions (BOs) under the Endangered Species Act on August 10, 1990, November 26, 1991, August 28, 1992, September 27, 1993, May 14, 1996, and December 15, 1999 pertaining to the impacts of the groundfish fishery on Sacramento River winter chinook, Snake River fall chinook, Snake River spring/summer chinook, Central Valley spring chinook, California coastal chinook, Puget Sound chinook, lower Columbia River chinook, upper Willamette River chinook, upper Columbia River spring chinook, Hood Canal summer run chum, Columbia River chum, Central California coastal coho, Oregon coastal coho, Snake River sockeye, Ozette Lake sockeye, southern California steelhead, south-central California steelhead, central California coast steelhead, upper Columbia River steelhead, Snake River Basin steelhead, lower Columbia River steelhead, California Central Valley steelhead, upper Willamette River steelhead, middle Columbia River steelhead, Umpqua River cutthroat trout, and the southwest Washington/Columbia cutthroat trout. The biological opinions concluded that implementation of the FMP for the Pacific Coast Groundfish Fishery is not expected to jeopardize the continued existence of any endangered or threatened species under the jurisdiction of NMFS, or result in the destruction or adverse modification of critical habitat. If implemented, this proposed rule would be within the scope of these consultations. Because the impacts of this action fall within the scope of the impacts considered in these BOs, additional consultations on these species are not required for this action.

This action implements a data collection program and is not expected to result in any adverse effects on marine mammals. This proposed rule has been determined to be significant for purposes of Executive Order 12866. The President has directed Federal agencies to use plain language in their communications with the public, including regulations. To comply with this directive, we seek public comment on any ambiguity or unnecessary complexity arising from the language used in this rule. Send comments to William Stelle, Jr. (see **ADDRESSES**).

List of Subjects in 50 CFR Part 660

Administrative practice and procedure, American Samoa, Fisheries, Fishing, Guam, Hawaiian Natives, Indians, Northern Mariana Islands, Reporting and recordkeeping requirements.

Dated: September 7, 2000.

William T. Hogarth,

Deputy Assistant Administrator for Fisheries, National Marine Fisheries Service.

For the reasons set out in the preamble, NMFS proposes to amend 50 CFR part 660 as follows:

PART 660—FISHERIES OFF WEST COAST STATES AND IN THE WESTERN PACIFIC

1. The authority citation for part 660 continues to read as follows:

Authority: 16 U.S.C. 1801 *et seq.*

2. In § 660.302, add the definitions for ''Active sampling unit,'' and ''Vessel manager,'' in alphabetical order, to read as follows:

§ 660.302 Definition.

Active sampling unit means a portion of the groundfish fleet in which an observer coverage plan is being applied.

* * * * *

Vessel manager means a person or group of persons whom the vessel owner has given authority to oversee all or a portion of groundfish fishing activities aboard the vessel.

3. In § 660.306, paragraph (y) is added to read as follows:

§ 660.306 Prohibitions.

* * * * *

(y) *Groundfish observer program.* (1) Forcibly assault, resist, oppose, impede, intimidate, harass, sexually harass, bribe, or interfere with an observer.

(2) Interfere with or bias the sampling procedure employed by an observer, including either mechanically or physically sorting or discarding catch before sampling.

(3) Tamper with, destroy, or discard an observer's collected samples, equipment, records, photographic film, papers, or personal effects without the express consent of the observer.

(4) Harass an observer by conduct that:

(i) Has sexual connotations,

(ii) Has the purpose or effect of interfering with the observer's work performance, and/or

(iii) Otherwise creates an intimidating, hostile, or offensive environment. In determining whether conduct constitutes harassment, the totality of the circumstances, including the nature of the conduct and the context in which it occurred, will be considered. The determination of the legality of a particular action will be made from the facts on a case-by-case basis.

(5) Fish for, land, or process fish without observer coverage when a vessel is required to carry an observer under § 660.360(c).

(6) Require, pressure, coerce, or threaten an observer to perform duties normally performed by crew members, including, but not limited to, cooking, washing dishes, standing watch, vessel maintenance, assisting with the setting or retrieval of gear, or any duties

associated with the processing of fish, from sorting the catch to the storage of the finished product.

(7) Fail to provide departure or cease fishing reports specified at § 660.360(c)(2).

(8) Fail to meet the vessel responsibilities specified at § 660.360(d).

4. Section 660.360 is added to subpart G to read as follows:

§ 660.360 Groundfish observer program.

(a) *General.* The owner of a vessel subject to this part must ensure that the vessel operator and vessel manager comply with this section. The vessel owner, operator, and vessel manager are jointly and severally responsible for such compliance.

(b) *Purpose.* The purpose of the Groundfish Observer Program is to allow observers to collect fisheries data deemed by the Northwest Regional Administrator, NMFS to be necessary and appropriate for management, compliance monitoring, and research in the groundfish fisheries and for the conservation of living marine resources and their habitat.

(c) *Observer coverage requirements*— (1) *At-sea processors.* [Reserved]

(2) *Catcher vessels.* For the purposes of this section catcher vessels include all vessels using open access or limited entry gear that take and retain, possess or land groundfish at a processor(s) as defined at § 660.302. When NMFS notifies the vessel owner, operator, permit holder, or the vessel manager of any requirement to carry an observer, the vessel may not take and retain, possess or land any groundfish without carrying an observer.

(i) *Departure report.* Not less than 24 hours before departing on a fishing trip, the owner, operator, or vessel manager of each vessel that is required to carry an observer, or that is operating in a segment of the fleet that NMFS has identified as an active sampling unit, must provide NMFS or its designated agent with notification as specified by NMFS.

(ii) *Cease fishing report.* Not more than 24 hours after ceasing the taking and retaining of groundfish with limited entry or open access gear in order to leave the fishery management area or to fish for species not managed under the Pacific Coast Groundfish Fishery Management Plan, the owner, operator, or vessel manager of each vessel that is required to carry an observer or that is operating in a segment of the fleet that NMFS has identified as an active sampling unit must provide NMFS or its designated agent with notification as specified by NMFS.

(3) *Vessels engaged in recreational fishing.* [Reserved]

(4) *Waiver.* The Northwest Regional Administrator may provide written notification to the vessel owner stating that a determination has been made to temporarily waive coverage requirements because of circumstances that are deemed to be beyond the vessel's control.

(d) *Vessel responsibilities.* An operator of a vessel required to carry one or more observer(s) must:

(1) *Accommodations and food.* Provide accommodations and food that are:

(i) *At-sea processors.* [Reserved]

(ii) *Catcher vessels.* equivalent to those provided to the crew.

(2) *Safe conditions.* Maintain safe conditions on the vessel for the protection of observer(s) including adherence to all U.S. Coast Guard and other applicable rules, regulations, or statutes pertaining to safe operation of the vessel, and provisions at §§ 600.725 and 600.746.

(3) *Observer communications.* Facilitate observer communications by:

(i) *Observer use of equipment.* Allowing observer(s) to use the vessel's communication equipment and personnel, on request, for the entry, transmission, and receipt of work-related messages, at no cost to the observer(s) or the United States or designated agent.

(ii) *Communication equipment requirements for at-sea processing vessels.* [Reserved]

(4) *Vessel position.* Allow observer(s) access to, and the use of, the vessel's navigation equipment and personnel, on request, to determine the vessel's position.

(5) *Access.* Allow observer(s) free and unobstructed access to the vessel's bridge, trawl or working decks, holding bins, processing areas, freezer spaces, weight scales, cargo holds, and any other space that may be used to hold, process, weigh, or store fish or fish products at any time.

(6) *Prior notification.* Notify observer(s) at least 15 minutes before fish are brought on board, or fish and fish products are transferred from the vessel, to allow sampling the catch or observing the transfer, unless the observer specifically requests not to be notified.

(7) *Records.* Allow observer(s) to inspect and copy any state or Federal logbook maintained voluntarily or as required by regulation.

(8) *Assistance.* Provide all other reasonable assistance to enable observer(s) to carry out their duties, including, but not limited to:

(i) Measuring decks, codends, and holding bins.

(ii) Providing the observer(s) with a safe work area.

(iii) Collecting bycatch when requested by the observer(s).

(iv) Collecting and carrying baskets of fish when requested by the observer(s).

(v) Allowing the observer(s) to collect biological data and samples when the procedure will not decrease the value of a significant portion of the catch.

(vi) Providing adequate space for storage of biological samples.

(9) *At-sea transfers to or from processing vessels.* [Reserved]

(e) *Procurement of observers services by at-sea processing vessels.*[Reserved]

(f) *Certification of observers in the at-sea processing vessels.*[Reserved]

(g) *Certification of observer contractors for at-sea processing vessels.* [Reserved]

(h) *Suspension and decertification process for observers and observer contractors in the at-sea processing vessels.* [Reserved]

(i) *Release of observer data in the at-sea processing vessels.* [Reserved]

(j) *Sample station and operational requirements*— (1) *Observer sampling station.* This paragraph contains the requirements for observer sampling stations. The vessel owner must provide an observer sampling station that complies with this section so that the observer can carry out required duties.

(i) *Accessibility.* The observer sampling station must be available to the observer at all times.

(ii) *Location.* The observer sampling station must be located within 4 m of the location from which the observer samples unsorted catch. Unobstructed passage must be provided between the observer sampling station and the location where the observer collects sample catch.

(iii) *Minimum work space aboard at-sea processing vessels.* [Reserved]

(iv) *Table aboard at-sea processing vessels.* [Reserved]

(v) *Scale hanger aboard at-sea processing vessels.* [Reserved]

(vi) *Diverter board aboard at-sea processing vessels.* [Reserved]

(vii) *Other requirements for at-sea processing vessels.* [Reserved]

(2) *Requirements for bins used to make volumetric estimates on at-sea processing vessels.* [Reserved]

(3) *Operational requirements for at-sea processing vessels.* [Reserved]

[FR Doc. 00–23629 Filed 9–13–00; 8:45 am]

BILLING CODE: 3510–22 –S

Notices

Federal Register

Vol. 65, No. 179

Thursday, September 14, 2000

This section of the FEDERAL REGISTER contains documents other than rules or proposed rules that are applicable to the public. Notices of hearings and investigations, committee meetings, agency decisions and rulings, delegations of authority, filing of petitions and applications and agency statements of organization and functions are examples of documents appearing in this section.

DEPARTMENT OF AGRICULTURE

Agricultural Research Service

Notice of Intent To Grant Exclusive License

AGENCY: Agricultural Research Service, USDA.

ACTION: Notice of intent.

SUMMARY: Notice is hereby given that the U.S. Department of Agriculture, Agricultural Research Service, intends to grant to the American Lyme Disease Foundation, Inc. of Somers, New York, an exclusive license to the invention disclosed in U.S. Patent No. 5,367,983 (S.N. 08/105,225) issued on November 29, 1994, entitled ''Device and Method for Its Use as an Aid in Control of Ticks and Other Ectoparasites on Wildlife.'' Notice of Availability was published in the **Federal Register** on April 19, 1995.

DATES: Comments must be received on or before November 13, 2000.

ADDRESSES: Send comments to: USDA, ARS, Office of Technology Transfer, 5601 Sunnyside Avenue, Rm. 4–1158, Beltsville, Maryland 20705–5131.

FOR FURTHER INFORMATION CONTACT: June Blalock of the Office of Technology Transfer at the Beltsville address given above; telephone: 301–504–5257.

SUPPLEMENTARY INFORMATION: The Federal Government's patent rights in this invention are assigned to the United States of America, as represented by the Secretary of Agriculture. It is in the public interest to so license this invention as the American Lyme Disease Foundation, Inc. has submitted a complete and sufficient application for a license. The prospective exclusive license will be royalty-bearing and will comply with the terms and conditions of 35 U.S.C. 209 and 37 CFR 404.7. The prospective exclusive license may be granted unless, within sixty (60) days from the date of this published Notice, the Agricultural Research Service receives written evidence and argument which establishes that the grant of the license would not be consistent with the requirements of 35 U.S.C. 209 and 37 CFR 404.7.

Richard M. Parry, Jr.,

Assistant Administrator.

[FR Doc. 00–23555 Filed 9–13–00; 8:45 am]

BILLING CODE 3410–03–P

DEPARTMENT OF AGRICULTURE

Agricultural Research Service

Notice of Federal Invention Available for Licensing and Intent To Grant Exclusive License

AGENCY: Agricultural Research Service, USDA.

ACTION: Notice of availability and intent.

SUMMARY: Notice is hereby given that a Federally owned invention, U.S. Patent No. 5,698,606 entitled ''Oxidative Delignification of Wood Pulp or Fibers Using Transition Metal-Substituted Polyoxometalates'' is available for licensing and that the U.S. Department of Agriculture, Forest Service, intends to grant to Emory University of Atlanta, Georgia, an exclusive license for U.S. Patent No. 5,698,606.

DATES: Comments must be received on or before December 13, 2000.

ADDRESSES: Send comments to: Janet I. Stockhausen, USDA Forest Service, One Gifford Pinchot Drive, Madison, Wisconsin 53705–2398.

FOR FURTHER INFORMATION CONTACT: Janet I. Stockhausen of the USDA Forest Service at the Madison address given above; telephone: 608–231–9502; fax: 608–231–9508; or email: jistockh@facstaff.wisc.edu

SUPPLEMENTARY INFORMATION: The Federal Government's patent rights to this invention are assigned to the United States of America, as represented by the Secretary of Agriculture. It is in the public interest to so license this invention as Emory University has submitted a complete and sufficient application for a license. The prospective license will be royalty-bearing and will comply with the terms and conditions of 35 U.S.C. 209 and 37 CFR 404.7. The prospective exclusive license may be granted unless, within ninety days from the date of this published Notice, the Forest Service receives written evidence and argument which establishes that the grant of the license would not be consistent with the requirements of 35 U.S.C. 209 and 37 CFR 404.7.

Richard M. Parry, Jr.,

Assistant Administrator.

[FR Doc. 00–23556 Filed 9–13–00; 8:45 am]

BILLING CODE 3410–03–P

DEPARTMENT OF AGRICULTURE

Agricultural Research Service

Notice of Intent To Grant Exclusive Patent License

AGENCY: Agricultural Research Service, USDA.

ACTION: Notice of intent.

SUMMARY: Notice is hereby given that the U.S. Department of Agriculture, Forest Service, intends to grant Hydrofarm, Inc. of Petaluma, California, an exclusive license for U.S. Patent No. 5,095,414, entitled ''Greenhouse Illumination System''. Notice of Availability was published in the **Federal Register** on December 17, 1991.

DATES: Comments must be received on or before November 13, 2000.

ADDRESSES: Send comments to: Janet I. Stockhausen, USDA Forest Service, One Gifford Pinchot Drive, Madison, Wisconsin 53705–2398.

FOR FURTHER INFORMATION CONTACT: Janet I. Stockhausen of the USDA Forest Service at the Madison address given above; telephone: 608–231–9502; fax: 608–231–9508; or email: jistockh@facstaff.wisc.edu

SUPPLEMENTARY INFORMATION: The Federal Government's patent rights to this invention are assigned to the United States of America, as represented by the Secretary of Agriculture. It is in the public interest to so license this invention as Hydrofarm, Inc. has submitted a complete and sufficient application for a license. The prospective license will be royalty bearing and will comply with the terms and conditions of 35 U.S.C. 209 and 37 CFR 404.7. The prospective license may be granted unless, within sixty days from the date of this published Notice, the Forest Service receives written evidence and argument which establishes that the grant of the license would not be consistent with the

requirements of 35 U.S.C. 209 and 37 CFR § 404.7.

Richard M. Parry, Jr.,

Assistant Administrator.

[FR Doc. 00–23553 Filed 9–13–00; 8:45 am]

BILLING CODE 3410–03–P

DEPARTMENT OF AGRICULTURE

Agricultural Research Service

Notice of Intent To Grant Exclusive License

AGENCY: Agricultural Research Service, USDA.

ACTION: Notice of intent.

SUMMARY: Notice is hereby given that the U.S. Department of Agriculture, Agricultural Research Service, intends to grant to R. J. Van Drunen & Sons, Inc. of Momence, Illinois, an exclusive license to the invention disclosed in U.S. Patent No. 6,060,519 (S.N. 09/130,788) issued on May 9, 2000, entitled ''Soluble Hydrocolloid Food Additives and Method of Making.'' Notice of Availability was published in the **Federal Register** on November 3, 1999.

DATES: Comments must be received on or before November 13, 2000.

ADDRESSES: Send comments to: USDA, ARS, Office of Technology Transfer, 5601 Sunnyside Avenue, Rm. 4–1158, Beltsville, Maryland 20705–5131.

FOR FURTHER INFORMATION CONTACT: June Blalock of the Office of Technology Transfer at the Beltsville address given above; telephone: 301–504–5257.

SUPPLEMENTARY INFORMATION: The Federal Government's patent rights in this invention are assigned to the United States of America, as represented by the Secretary of Agriculture. It is in the public interest to so license this invention as R. J. Van Drunen & Sons, Inc. has submitted a complete and sufficient application for a license. The prospective exclusive license will be royalty-bearing and will comply with the terms and conditions of 35 U.S.C. 209 and 37 CFR 404.7. The prospective exclusive license may be granted unless, within sixty (60) days from the date of this published Notice, the Agricultural Research Service receives written evidence and argument which establishes that the grant of the license would not be consistent with the requirements of 35 U.S.C. 209 and 37 CFR 404.7.

Richard M. Parry, Jr.,

Assistant Administrator.

[FR Doc. 00–23554 Filed 9–13–00; 8:45 am]

BILLING CODE 3410–03–P

DEPARTMENT OF AGRICULTURE

Grain Inspection, Packers and Stockyards Administration

Solicitation of Nominations for Members of the Grain Inspection Advisory Committee

AGENCY: Grain Inspection, Packers and Stockyards Administration, USDA.

ACTION: Notice to solicit nominees.

SUMMARY: The Grain Inspection, Packers and Stockyards Administration (GIPSA) is announcing that nominations are being sought for persons to serve on GIPSA's Grain Inspection Advisory Committee.

SUPPLEMENTARY INFORMATION: Under authority of section 20 of the United States Grain Standards Act (Act) Pub. L. 97–35, the Secretary of Agriculture established the Grain Inspection Advisory Committee (Advisory Committee) on September 29, 1981, to provide advice to the Administrator on implementation of the Act. Section 14 of the United States Grain Standards Act Amendments of 1993, Pub. L. 103–156, extended the authority for the Advisory Committee through September 30, 2000.

The Advisory Committee presently consists of 15 members, appointed by the Secretary, who represent the interests of grain producers, processors, handlers, merchandisers, consumers, and exporters, including scientists with expertise in research related to the policies in section 2 of the Act. Members of the Committee serve without compensation. They are reimbursed for travel expenses, including per diem in lieu of subsistence, for travel away from their homes or regular places of business in performance of Committee service, as authorized under section 5703 of title 5, United States Code. Alternatively, travel expenses may be paid by Committee members.

Nominations are being sought for persons to serve on the Advisory Committee to replace the five members and the five alternate members whose terms expire in March 2001.

Persons interested in serving on the Advisory Committee, or in nominating individuals to serve, should contact: GIPSA, by telephone (202–720–0219), fax (202–205–9237), or electronic mail (mplaus@gipsadc.usda.gov) and request Form AD–755. Form AD–755 may also be obtained via the Internet through GIPSA's homepage at: *http://www.usda.gov/gipsa/thisis/ac/ad755.pdf*. Completed forms must be submitted to GIPSA by fax or at the following address: GIPSA, 1400 Independence Ave., SW, Stop 3601, Washington, DC 20250–3601. Form AD–755 must be received not later than October 16, 2000.

Nominations are open to all individuals without regard to race, color, religion, sex, national origin, age, mental or physical handicap, marital status, or sexual orientation. To ensure that recommendations of the Committee take into account the needs of the diverse groups served by the Department, membership shall include, to the extent practicable, individuals with demonstrated ability to represent minorities, women, and persons with disabilities.

The final selection of Advisory Committee members and alternates will be made by the Secretary.

Dated: September 7, 2000.

James R. Baker,

Administrator, Grain Inspection, Packers and Stockyards Administration.

[FR Doc. 00–23503 Filed 9–13–00; 8:45 am]

BILLING CODE 3410–EN–P

DEPARTMENT OF AGRICULTURE

Natural Resources Conservation Service

Availability of Proposed Changes to Conservation Standards in Section IV of the Field Office Technical Guide, South Dakota

AGENCY: USDA Natural Resources Conservation Service, USDA.

ACTION: Notice of availability of proposed changes to conservation practice standards in Section IV of the Field Office Technical Guide (FOTG) of NRCS in South Dakota for review and comment.

SUMMARY: It is the intention of NRCS in South Dakota to issue a revised conservation practice standard in Section IV of the FOTG for the following practice: Constructed Wetland (656).

DATES: Comments on this notice must be received on or before October 16, 2000.

ADDRESSES: All comments concerning the proposed conservation practice standard changes should be addressed to: Dean Fisher, State Conservationist, NRCS, 200 Fourth Street SW, Huron, South Dakota 57350. Copies of these standards will be made available upon written request.

Dated: August 30, 2000.

Dean Fisher,

State Conservationist, Natural Resources Conservation Service, Huron, South Dakota 57350.

[FR Doc. 00–23577 Filed 9–13–00; 8:45 am]

BILLING CODE 3410–16–P

DEPARTMENT OF AGRICULTURE

Rural Utilities Service

Title Evidence Requirements for Real Property—Electric Program

AGENCY: Rural Utilities Service, USDA.

ACTION: Policy statement.

SUMMARY: Rural Electrification Administration (REA) Bulletin 20–3, July 1956, ''Obtaining Adequate Right-of-way and Submission of Title Evidence by REA Electric Borrowers'' (Bulletin 20–3), is rescinded because it has not been updated to reflect subsequently published Rural Utilities Service (RUS) regulations and is obsolete.

DATES: Effective September 14, 2000.

FOR FURTHER INFORMATION CONTACT: Gail P. Salgado, Management Analyst, Office of the Assistant Administrator, Electric Program, Rural Utilities Service, U.S. Department of Agriculture, Room 4024–S, Stop 1560, 1400 Independence Avenue, SW, Washington, DC 20250–1560. Telephone: 202–205–3660. FAX: 202–690–0717. E-mail: GSalgado@rus.usda.gov.

SUPPLEMENTARY INFORMATION: In 1995, RUS as the successor to REA developed and published new model forms of the electric distribution loan contract, set forth at 7 CFR Part 1718, Appendix A to Subpart C, and mortgage, set forth at 7 CFR part 1718, Appendix A to Subpart B. These contemporary documents are designed to provide the government with the assurance of reasonably adequate security for loans to electric distribution borrowers. Among other matters, the documents require that the borrower have good and marketable title to all mortgaged property including any real property owned or acquired for use in the construction and operation of the borrower's utility system (See 7 CFR part 1718, Appendix A to Subpart C, Model Form of Loan Contract, Section 2.1, Representations and Warranties). In the case of power supply borrowers, the requirements for loan security are generally set forth in 7 CFR 1710.113. Title requirements for mortgaged property are typically already set forth with greater specificity in the individual loan documents used by each power supply borrower. See also, § 1710.401(a)(7), setting out mortgage information required to be submitted as part of the loan application process.

RUS has determined that it will no longer routinely require the submission of detailed title evidence in connection with the construction of distribution, transmission, and headquarters facilities. However, RUS is retaining the right to require additional evidence of title in unusual individual cases. In such cases, RUS will request the borrower to submit any such additional necessary title evidence as part of its application for assistance. RUS will continue to require title evidence for generation projects.

It is expected that as a prudent utility, each borrower will comply with the provisions of its loan documents and continue obtaining sufficient and adequate right-of-way authorizations and title to any real estate it requires for the construction and operation of its facilities.

Effective September 14, 2000, REA Bulletin 20–3, July 1956, ''Obtaining Adequate Right-of-way and Submission of Title Evidence by REA Electric Borrowers'' (Bulletin 20–3), is rescinded and borrowers are no longer required to submit title documents to RUS as required by its provisions. However, RUS does retain the right to require additional evidence in unusual individual cases.

Dated: September 6, 2000.

Christopher A. McLean,

Administrator, Rural Utilities Service.

[FR Doc. 00–23619 Filed 9–13–00; 8:45 am]

BILLING CODE 3410–15–P

BROADCASTING BOARD OF GOVERNORS

Performance Review Board Members

AGENCY: Broadcasting Board of Governors.

ACTION: Notice of membership.

SUMMARY: This Notice is issued to announce the membership of the Broadcasting Board of Governors (BBG) Performance Review Board.

DATES: September 14, 2000.

FOR FURTHER INFORMATION CONTACT: Ms. Linda C. Beard (Executive Secretary), Office of Personnel, Broadcasting Board of Governors, 330 Independence Avenue S.W., Washington, D.C. 20237, Telephone: (202) 619–1523.

SUPPLEMENTARY INFORMATION: In accordance with sections 4314(c) (1) through (5) of the Civil Service Reform Act of 1978 (Pub. L. 95454), the following is a list of members of the 1999 Performance Review Board for the Broadcasting Board of Governors.

Chairperson: Director for International Broadcasting Bureau, Brian Conniff (Acting). Panel 1—International Broadcasting Bureau SES Members

Chairperson: Chief of Staff for the Broadcasting Board of Governors Josiah H. Beeman. Panel 2: Broadcasting Board of Governors SES Members Career SES Members

Patricia Popovich, Deputy Chief, Information Officer For Management, Information Resources Management Bureau, Department of State.

Mike Blank, Executive Officer for the Immediate Office of the Secretary for Health and Human Services

Stephen S. Smith, Associate Director for Management, International Broadcasting Bureau, Broadcasting Board of Governors

Alternate Career SES Members

William E. Todd, Executive Director, Bureau of Finance and Management Policies, Department of State

Delores Parron, Deputy Assistant Secretary for Program Systems, ASPE, Health and Human Services

Dated: September 8, 2000.

John S. Welch,

Director, Office of Personnel.

[FR Doc. 00–23588 Filed 9–13–00; 8:45 am]

BILLING CODE 8610–01–P

DEPARTMENT OF COMMERCE

International Trade Administration

[A–421–701]

Brass Sheet and Strip From the Netherlands: Final Results of Antidumping Duty Administrative Review

AGENCY: Import Administration, International Trade Administration, Department of Commerce.

ACTION: Notice of final results of antidumping duty administrative review.

SUMMARY: We determine that sales of the subject merchandise have not been made below normal value (NV). We will instruct the U.S. Customs Service (Customs Service) not to assess antidumping duties on the subject merchandise exported by this company.

EFFECTIVE DATE: September 14, 2000.

FOR FURTHER INFORMATION CONTACT: James Terpstra or Geoffrey Craig, AD/CVD Enforcement, Office VI, Group II, Import Administration, International Trade Administration, U.S. Department of Commerce, 14th Street and

Constitution Avenue, N.W., Washington, D.C. 20230; telephone: (202) 482–3965 or (202) 482–4161, respectively.

SUPPLEMENTARY INFORMATION:

Applicable Statute and Regulations

Unless otherwise indicated, all citations to the statute are references to the provisions of the Tariff Act of 1930, as amended by the Uruguay Round Agreements Act (URAA) effective January 1, 1995 (the Act). In addition, unless otherwise indicated, all citations to the Department's regulations refer to the regulations codified at 19 CFR part 351 (April 1999).

Case History

On May 10, 2000, the Department of Commerce (the Department) published the preliminary results of its administrative review of the antidumping duty order on brass sheet and strip from the Netherlands. See Notice of Preliminary Results of Antidumping Duty Administrative Review: Brass Sheet and Strip from the Netherlands, 65 FR 30058 (Preliminary Results). This review covers shipments by one respondent, Outokumpu Copper Strip B.V. (OBV), during the period of review (POR) August 1, 1998 through July 31, 1999. Interested parties did not submit case briefs nor did they request a hearing. There have been no changes since the preliminary results.

Scope of Review

Imports covered by this review are brass sheet and strip, other than leaded and tin brass sheet and strip, from the Netherlands. The chemical composition of the products under review is currently defined in the Copper Development Association (CDA) 200 Series or the Unified Numbering System (UNS) C2000 series. This review does not cover products the chemical compositions of which are defined by other CDA or UNS series. The physical dimensions of the products covered by this review are brass sheet and strip of solid rectangular cross section over 0.006 inch (0.15 millimeter) through 0.188 inch (4.8 millimeters) in gauge, regardless of width. Included in the scope are coiled, wound-on-reels (traverse wound), and cut-to-length products. The merchandise under review is currently classifiable under items 7409.21.00 and 7409.29.20 of the Harmonized Tariff Schedule of the United States (HTSUS). Although the HTSUS subheadings are provided for convenience and customs purposes, the written description of the merchandise under review is dispositive.

Price Comparisons

We calculated export price and NV based on the same methodology described in the *Preliminary Results*.

Cost of Production

As discussed in the *Preliminary Results,* we conducted an investigation to determine whether the respondent participating in the review made home market sales of the foreign like product during the POR at prices below their cost of production (COP) within the meaning of section 773(b)(1) of the Act. We calculated the COP for these final results following the same methodology as in the *Preliminary Results.*

We found 20 percent or more of OBV's sales of a given product during the 12 month period were at prices less than the weighted-average COP for the POR and thus determined that these below cost sales were made in ''substantial quantities'' within an extended period of time, and that such sales were not made at prices which would permit recovery of all costs within a reasonable period of time, in accordance with section 773(b)(2)(B), (C), and (D) of the Act. Therefore, for purposes of these final results, we disregarded the below-cost sales and used the remaining sales as the basis for determining NV, pursuant to section 773(b)(1) of the Act. While we disregarded some below-cost sales, sufficient sales remained that passed the cost test in the current review. Therefore, it was unnecessary to calculate constructed value in this case.

Analysis of Comments Received

We gave interested parties an opportunity to comment on the *Preliminary Results*. As noted above, we received no comments from the petitioners or OBV.

Final Results of Review

As a result of our review, we determine that OBV had a zero weighted-average margin for the period August 1, 1998 through July 31, 1999. Therefore, we will instruct the Customs Service not to assess antidumping duties on the subject merchandise exported by this company (*see* 19 CFR 351.106(c)(2)). We have calculated an importer-specific assessment rate equal to zero.

Cash Deposit Requirements

As a result of a Sunset Review of brass sheet and strip from the Netherlands, the Department has revoked the antidumping duty order for this case, effective January 1, 2000. *See* Revocation of Antidumping Duty Orders: Brass Sheet and Strip From the Republic of Korea, the Netherlands, and Sweden, 65 FR 25305 (May 1, 2000). Therefore, we have instructed the Customs Service to terminate suspension of liquidation for all entries of subject merchandise made on or after January 1, 2000. We have also issued additional instructions directing the Customs Service to liquidate all entries of brass sheet and strip made on or after January 1, 2000, without regard to antidumping duties.

Entries of subject merchandise made prior to January 1, 2000, will continue to be subject to suspension of liquidation and antidumping duty deposit requirements. The Department will complete any pending reviews of this order and will conduct administrative reviews of subject merchandise entered prior to the effective date of revocation in response to appropriately filed requests for review.

Notification to Importers

This notice serves as a reminder to importers of their responsibility under 19 CFR 351.402 to file a certificate regarding the reimbursement of antidumping duties prior to liquidation of the relevant entries during this review period.

Failure to comply with this requirement could result in the Secretary's presumption that reimbursement of antidumping duties occurred and the subsequent assessment of double antidumping duties.

This determination is issued and published in accordance with sections 751(a)(1) and 777(i)(1) of the Act (19 USC 1675(a)(1) and 19 USC 1677f(i)(1)).

Dated: September 5, 2000.

Troy H. Cribb,

Acting Assistant Secretary for Import Administration.

[FR Doc. 00–23686 Filed 9–13–00; 8:45 am]

BILLING CODE 3510–DS–P

DEPARTMENT OF COMMERCE

International Trade Administration

[A–122–814]

Pure Magnesium From Canada; Final Results of Antidumping Duty Administrative Review and Determination Not To Revoke the Antidumping Duty Order in Part

AGENCY: Import Administration, International Trade Administration, Department of Commerce.

ACTION: Notice of final results of 1998–1999 administrative review and intent not to revoke.

SUMMARY: The Department of Commerce is conducting an administrative review of the antidumping duty order on pure magnesium from Canada. The period of review is August 1, 1998 through July 31, 1999. This review covers imports of pure magnesium from one producer/exporter.

For our final results, we have found that sales of the subject merchandise have not been made below normal value. We will instruct the Customs Service not to assess antidumping duties on the subject merchandise exported by this company. Furthermore, we are not revoking the antidumping duty order given that shipments of subject merchandise to the United States by Norsk Hydro Canada Inc. have not been made in commercial quantities for each of the three consecutive review periods that formed the basis of the revocation request. *See Determination Not To Revoke Order* section of this notice.

EFFECTIVE DATE: September 14, 2000.

FOR FURTHER INFORMATION CONTACT: Jarrod Goldfeder or Meg Weems, Import Administration, AD/CVD Enforcement Group I, Office 1, U.S. Department of Commerce, 14th Street and Constitution Avenue, NW, Washington, D.C. 20230; telephone (202) 482–0189 or 482–2613, respectively.

SUPPLEMENTARY INFORMATION:

Applicable Statute and Regulations

Unless otherwise indicated, all citations to the Tariff Act of 1930, as amended (''the Act''), are references to the provisions effective January 1, 1995, the effective date of the amendments made to the Act by the Uruguay Round Agreements Act (''URAA''). In addition, all references to the Department of Commerce's (''the Department's'') regulations are to 19 CFR Part 351 (1999).

Background

This review covers one manufacturer/exporter of pure magnesium, Norsk Hydro Canada Inc. (''NHCI''). This period of review (''POR'') is August 1, 1998, through July 31, 1999.

On May 10, 2000, the Department published the preliminary results of the administrative review of the antidumping duty order on pure magnesium from Canada and its notice of intent not to revoke the order with respect to pure magnesium produced by NHCI (65 FR 30070) (''*Preliminary Results*''). We invited parties to comment on our *Preliminary Results* of review. NHCI filed a case brief on June 16, 2000. The petitioner, Magnesium Corporation of America (''the petitioner''), filed a rebuttal brief on June 28, 2000. A public hearing was not held.

Scope of the Review

The product covered by this review is pure magnesium. Pure unwrought magnesium contains at least 99.8 percent magnesium by weight and is sold in various slab and ingot forms and sizes. Granular and secondary magnesium are excluded from the scope of this review. Pure magnesium is currently classified under subheading 8104.11.0000 of the Harmonized Tariff Schedule of the United States (''HTSUS''). The HTSUS item number is provided for convenience and for U.S. Customs Service (''Customs'') purposes. The written description remains dispositive.

Determination Not to Revoke Order in Part

The Department ''may revoke, in whole or in part'' an antidumping duty order upon completion of a review under section 751 of the Act. While Congress has not specified the procedures that the Department must follow in revoking an order, the Department has developed a procedure for revocation that is described in 19 CFR 351.222. This regulation requires, *inter alia,* that a company requesting revocation must submit the following: (1) A certification that the company has sold the subject merchandise at not less than normal value (''NV'') in the current review period and that the company will not sell at less than NV in the future; (2) a certification that the company sold the subject merchandise in each of the three years forming the basis of the request in commercial quantities; and (3) an agreement to reinstatement of the order if the Department concludes that the company, subsequent to the revocation, sold subject merchandise at less than NV. *See* 19 CFR 351.222(e)(1). Upon receipt of such a request, the Department may revoke an order, in part, if it concludes that (1) the company in question has sold subject merchandise at not less than NV for a period of at least three consecutive years; (2) it is not likely that the company will in the future sell the subject merchandise at less than NV; and (3) the company has agreed to its immediate reinstatement in the order if the Department concludes that the company, subsequent to the revocation, sold subject merchandise at less than NV. *See* 19 CFR 351.222(b)(2).

We must determine, as a threshold matter, in accordance with 19 CFR 351.222(e)(1)(ii), whether the company requesting revocation sold the subject merchandise in commercial quantities in each of the three years forming the basis of the request. In our *Preliminary Results,* we determined that ''NHCI does not qualify for revocation of the order on pure magnesium because it does not have three consecutive years of sales in commercial quantities at not less than normal value.'' *See Preliminary Results,* 65 FR at 30071; *see also* Memorandum from Team to Susan Kuhbach, ''Commercial Quantities,'' dated April 20, 2000, for a discussion of NHCI's selling activity.

After consideration of the various comments that were submitted in response to the *Preliminary Results,* we determine that NHCI did not sell the subject merchandise in the United States in commercial quantities in each of the three years cited by NHCI to support its request for revocation. *See ''Analysis of Comments Received,''* below. Therefore, we find that NHCI does not qualify for revocation of the order on pure magnesium under 19 CFR 351.222(e)(1)(ii).

Our determination is consistent with the two immediately preceding administrative reviews of this order. See Pure Magnesium From Canada; Final Results of Antidumping Duty Administrative Review and Determination Not to Revoke Order in Part, 64 FR 12977, 12978 (March 16, 1999) (''Fifth Review'') and Pure Magnesium From Canada; Final Results of Antidumping Duty Administrative Review and Determination Not to Revoke Order in Part, 64 FR 50489, 50490 (September 17, 1999) (''Sixth *Review*''). In the Fifth Review, we determined that NHCI did not sell the subject merchandise in the United States in commercial quantities in any of the three years cited by NHCI to support its request for revocation (the administrative review years 1994–1995, 1995–1996, and 1996–1997). See Fifth Review, 64 FR at 12978. In the Sixth Review, we determined that NHCI did not sell the subject merchandise in the United States in commercial quantities in two of the three years cited by NHCI to support its request for revocation (the administrative review years 1995–1996 and 1996–1997). Thus, consistent with our findings in the Fifth Review and Sixth Review, we determine that NHCI does not qualify for revocation of the order on pure magnesium because it did not make sales at not less than NV in at least one of the three years cited by NHCI to support its request for revocation (the administrative review years 1996–1997), as provided for in 19 CFR 351.222(b) and (e)(1)(ii). Furthermore, we note that because

NHCI did not make sales in commercial quantities during the POR of the Fifth Review, it is not necessary to examine whether NHCI made sales in commercial quantities during the sixth and seventh review periods (*i.e.,* 1997–98 and 1998–99).

Analysis of Comments Received

All issues raised in the case and rebuttal briefs in this administrative review are addressed in the ''Issues and Decision Memorandum for the Seventh Antidumping Duty Administrative Review and Determination Not to Revoke'' from Richard W. Moreland, Deputy Assistant Secretary for AD/CVD Enforcement Group I, Import Administration, to Troy H. Cribb, Acting Assistant for Import Administration, dated September 7, 2000 (''Decision Memorandum''), which is hereby adopted by this notice. A list of the issues which parties have raised and to which we have responded, all of which are in the Decision Memorandum, is attached to this notice as an Appendix. Parties can find a complete discussion of all issues raised in this review and the corresponding recommendations in this Decision Memorandum, which is on file in the Central Records Unit, room B–099 of the main Department of Commerce building. In addition, a complete version of the Decision Memorandum can be accessed directly on the World Wide Web at http://ia.ita.doc.gov/frn/. The paper copy and electronic version of the Decision Memorandum are identical in content.

Changes From the Preliminary Results

We calculated export price and NV based on the same methodology described in the *Preliminary Results.*

Final Results of the Review

As a result of this review, we determine that the following percentage weighted-average margin exists for the period August 1, 1998, through July 31, 1999:

Manufacturer/exporter	Margin
Norsk Hydro Canada Inc.	zero.

Because the weighted-average dumping margin is zero, we will instruct the Customs Service to liquidate all entries made during this review period without regard to antidumping duties for the subject merchandise that NHCI exported.

Cash Deposit Requirements

The following deposit requirements will be effective for all shipments of the subject merchandise entered, or withdrawn from warehouse, for consumption on or after the publication date of these final results of this administrative review, as provided by section 751(a)(1) of the Act: (1) The cash deposit rate for NHCI will be the rate indicated above; (2) for companies not covered in this review, but covered in previous reviews or the original less-than-fair-value investigation, the cash deposit rate will continue to be the company-specific rate published for the most recent period; (3) if the exporter is not a firm covered in this review, a prior review, or the original investigation, but the manufacturer is, the cash deposit rate will be the most recent rate established for the manufacturer of the merchandise; and (4) if neither the exporter nor the manufacturer is a firm covered in this or any previous review or the original investigation, the cash deposit rate will be the ''all others'' rate of 21 percent established in the amended final determination of sales at less than fair value (58 FR 62643 (November 29, 1993)).

These deposit requirements will remain in effect until publication of the final results of the next administrative review.

This notice also serves as a final reminder to importers of their responsibility under 19 CFR 351.402(f) to file a certificate regarding the reimbursement of antidumping duties prior to liquidation of the relevant entries during this review period. Failure to comply with this requirement could result in the Secretary's presumption that reimbursement of antidumping duties occurred and the subsequent assessment of double antidumping duties.

This notice also serves as a reminder to parties subject to administrative protective orders (''APOs'') of their responsibility concerning the disposition of proprietary information disclosed under APO in accordance with 19 CFR 351.305(a)(3). Timely written notification of the return/destruction of APO materials or conversion to judicial protective order is hereby requested. Failure to comply with the regulations and the terms of an APO is a violation which is subject to sanction.

This determination is issued and published in accordance with sections 751(a)(1) and 777(i)(1) of the Act.

Dated: September 7, 2000.

Troy H. Cribb,

Acting Assistant Secretary for Import Administration.

Appendix—Issues in Decision Memo—

Comments and Responses

A. Revocation/Commercial Quantities

1. Compliance with the WTO Antidumping Agreement
2. Definition of Commercial Quantities
3. Retroactive Application
4. Procedural Requirements for Revocation
5. The Department's Revocation Practice
6. Benchmarks Used to Determine Commercial Quantities
7. Significant Drop-offs in Sales After Imposition of an Order
8. Changes to a Respondent's Commercial Practice
9. Whether the Evidence Demonstrates Commercial Quantities

[FR Doc. 00–23687 Filed 9–13–00; 8:45 am]

BILLING CODE 3510–DS–P

DEPARTMENT OF COMMERCE

International Trade Administration

[A–588–856, A–580–846, A–469–810]

Initiation of Antidumping Duty Investigations: Stainless Steel Angle From Japan, Korea, and Spain

AGENCY: Import Administration, International Trade Administration, Department of Commerce.

EFFECTIVE DATE: September 14, 2000.

FOR FURTHER INFORMATION CONTACT: Davina Hashmi (Spain) at (202) 482–5760, Brian Smith (Korea) at (202) 482–1766, or Jarrod Goldfeder (Japan) at (202) 482–0189, Import Administration, International Trade Administration, U.S. Department of Commerce, 14th Street and Constitution Avenue, NW, Washington, DC 20230.

Initiation of Investigations

The Applicable Statute and Regulations

Unless otherwise indicated, all citations to the Tariff Act of 1930, as amended (the Act), are references to the provisions effective January 1, 1995, the effective date of the amendments made to the Act by the Uruguay Round Agreements Act (URAA). In addition, unless otherwise indicated, all citations to the Department of Commerce's (the Department's) regulations are to 19 CFR part 351 (April 1999).

The Petitions

On August 18, 2000, the Department received petitions filed in proper form by Slater Steels Corporation (Speciality Alloys Division) and the United Steelworkers of America, AFL–CIO/CLC

(collectively the petitioners). The Department received supplemental information to the petitions on August 23, 28 and September 5, 6, 2000.

In accordance with section 732(b) of the Act, the petitioners allege that imports of stainless steel angle (SSA) from Japan, Korea, and Spain are being, or are likely to be, sold in the United States at less than fair value within the meaning of section 731 of the Act and that such imports are materially injuring an industry in the United States.

The Department finds that the petitioners filed these petitions on behalf of the domestic industry because they are interested parties as defined in sections 771(9)(C) and (D) of the Act and they have demonstrated sufficient industry support with respect to each of the antidumping investigations that they are requesting the Department to initiate. (See Determination of Industry Support for the Petitions below.)

Scope of Investigations

For purposes of these investigations, the term ''stainless steel angle'' includes hot-rolled, whether or not annealed or descaled, stainless steel products of equal leg length angled at 90 degrees that are not otherwise advanced. The stainless steel angle subject to these investigations is currently classifiable under subheadings 7222.40.30.20 and 7222.40.30.60 of the Harmonized Tariff Schedules of the United States (HTSUS). Specifically excluded from the scope of these investigations is stainless steel angle of unequal leg length. Although the HTSUS subheadings are provided for convenience and Customs purposes, our written description of the scope of these investigations is dispositive.

Determination of Industry Support for the Petitions

Section 732(b)(1) of the Act requires that a petition be filed on behalf of the domestic industry. Section 732(c)(4)(A) of the Act provides that a petition meets this requirement if the domestic producers or workers who support the petition account for: (1) At least 25 percent of the total production of the domestic like product; and (2) more than 50 percent of the production of the domestic like product produced by that portion of the industry expressing support for, or opposition to, the petition.

Section 771(4)(A) of the Act defines the ''industry'' as the producers of a domestic like product. Thus, to determine whether a petition has the requisite industry support, the statute directs the Department to look to producers and workers who produce the domestic like product. The International Trade Commission (ITC), which is responsible for determining whether ''the domestic industry'' has been injured, must also determine what constitutes a domestic like product in order to define the industry. While both the Department and the ITC must apply the same statutory definition regarding the domestic like product (section 771(10) of the Act), they do so for different purposes and pursuant to separate and distinct authority. In addition, the Department's determination is subject to limitations of time and information. Although this may result in different definitions of the like product, such differences do not render the decision of either agency contrary to the law.[1]

Section 771(10) of the Act defines the domestic like product as ''a product which is like, or in the absence of like, most similar in characteristics and uses with, the article subject to an investigation under this title.'' Thus, the reference point from which the domestic-like-product analysis begins is ''the article subject to an investigation,'' *i.e.*, the class or kind of merchandise to be investigated, which normally will be the scope as defined in the petition. Moreover, the petitioners do not offer a definition of domestic like product distinct from the scope of the investigations. In this case, ''the article subject to an investigation'' includes certain products which have not previously been included within the scope of investigations involving stainless steel angle with the exception of Japan.[2] To this end, the Department has reviewed reasonably available information to determine whether the products within the scope of the investigations constitute one or more than one domestic like product.

We reviewed this description with product experts at the Department, the U.S. Customs Service, and the ITC. Based on our analysis of the information the petitioners presented in the petition and the information independently obtained and reviewed by the Department, we have determined that there is a single domestic like product which is defined in the ''Scope of Investigations'' section above. Moreover, the Department has determined that the petitions contain adequate evidence of industry support and, therefore, polling is unnecessary. (See Import Administration Antidumping Investigation Initiation Checklists, Re: Industry Support, September 7, 2000, hereinafter the IA Initiation Checklists, on file in the Central Records Unit (CRU), Room B–099 of the main Department of Commerce building). The Department received no opposition to the petitions. For all countries, the petitioners established industry support representing over 50 percent of total production of the domestic like product. Accordingly, the Department determines that these petitions are filed on behalf of the domestic industry within the meaning of section 732(b)(1) of the Act.

Initiation Standard for Cost Investigations

Pursuant to section 773(b) of the Act, the petitioners provided information demonstrating reasonable grounds to believe or suspect that sales in the home markets of Japan, Korea, and Spain were made at prices below the cost of production (COP) and, accordingly, requested that the Department conduct country-wide sales-below-COP investigations in connection with the requested antidumping investigations in Japan, Korea, and Spain. The Statement of Administrative Action (SAA), submitted to the Congress in connection with the interpretation and application of the URAA, states that an allegation of sales below COP need not be specific to individual exporters or producers. SAA, H.R. Doc. No. 316 at 833 (1994). The SAA, at 833, states that ''Commerce will consider allegations of below-cost sales in the aggregate for a foreign country, just as Commerce currently considers allegations of sales at less than fair value on a country-wide basis for purposes of initiating an antidumping investigation.''

Further, the SAA provides that new section 773(b)(2)(A) of the Act retains the requirement that the Department have ''reasonable grounds to believe or suspect'' that below-cost sales have occurred before initiating such an investigation. Reasonable grounds exist when an interested party provides specific factual information on costs and prices, observed or constructed, indicating that sales in the foreign market in question are at below-cost prices. *Id.* We have analyzed the

[1] *See Algoma Steel Corp. Ltd.,* v. *United States*, 688 F. Supp. 639, 642–44 (CIT 1988); High Information Content Flat Panel Displays and Display Glass Therefore from Japan: Final Determination; Rescission of Investigation and Partial Dismissal of Petition, 56 FR 32376, 32280–81 (July 16, 1991).

[2] The Department determined that SSA from Japan was being sold in the United States at less than fair value in a previous investigation (*see* Final Determination of Sales at Less Than Fair Value: Antidumping Duty Investigation of Stainless Steel Angle from Japan, 60 FR 16608 (March 31, 1995)). However, the ITC concluded that the domestic industry was materially injured, or threatened with material injury, by imports from Japan at that time (*see* Stainless Steel Angle from Japan, Inv. No. 731–TA–699 (Final), USITC Pub. 2887 (May 17, 1995)).

country-specific allegations as described below.

Export Price and Normal Value

The following are descriptions of the allegations of sales at less than fair value upon which we have based our decisions to initiate these investigations. A more detailed description of these allegations is provided in the respective IA Initiation Checklists. Should the need arise to use any of this information in our preliminary or final determinations for purposes of facts available under section 776 of the Act, we may re-examine the information and revise the margin calculations, if appropriate.

A. Japan

The petitioners identified Aichi Steel Works, Ltd. (Aichi), Daido Steel Co., Ltd., and Sumitomo Metal Industries, Ltd., as producers and exporters of SSA from Japan. According to the petitioners, these three companies account for the vast majority of subject merchandise exported from Japan to the United States. The petitioners based export price (EP) on C&F and F.O.B. U.S. prices from Aichi directly to an unaffiliated distributor and through a U.S. distributor to an unaffiliated purchaser for two grades of SSA. The petitioners obtained these prices from U.S. industry sources. The petitioners made deductions from EP for ocean freight and insurance (calculated from official U.S. import statistics), duties (from the HTSUS), harbor-maintenance and merchandise-processing fees, and U.S. and foreign inland freight. In addition, with respect to sales made through the distributor, the petitioners adjusted the U.S. prices downward for a distributor mark-up based on pricing data submitted in the petition.

With respect to normal value (NV), the petitioners provided Aichi's home-market prices for two grades of SSA sold to unaffiliated home-market customers which were obtained from foreign market research. These products are comparable to the products exported to the United States which served as the basis for EP. The prices the petitioners used in the calculation of NV were delivered prices, exclusive of taxes. The petitioners made a deduction from NV for foreign inland freight which was also obtained from foreign market research. Pursuant to section 773(a)(6)(C)(iii) of the Act and 19 CFR 351.410(c), the petitioners made a circumstance-of-sale adjustment for differences in credit expenses between home-market and U.S. sales. The petitioners did not adjust the prices for differences in packing costs because they assumed that packing costs were the same for both markets.

Having analyzed the petition, we made revisions to the Japan-specific data contained in the petition. Consistent with the EP calculation, we revised the distributor mark-up such that the mark-up rate is applied to starting prices on a grade-specific basis. For purposes of calculating NV, we recalculated home-market inland freight by relying upon all freight amounts included in the foreign market research. (See IA Initiation Checklist for further discussion of these changes.)

In addition, the petitioners provided information demonstrating reasonable grounds to believe or suspect that sales of SSA in the home market were made at prices below the COP within the meaning of section 773(b) of the Act, and requested that the Department conduct a country-wide sales-below-cost investigation.

Pursuant to section 773(b)(3) of the Act, COP consists of the cost of manufacturing (COM), selling, general, and administrative (SG&A) expenses (which include financial expenses) and packing costs. To calculate Aichi's COM, the petitioners relied upon their own production experience, adjusted for known differences between costs incurred to produce SSA in the United States and in Japan using information obtained through market research and publicly available data. To calculate SG&A expenses, the petitioners relied upon Aichi's 1999 financial statements.

Based upon the comparison of the adjusted prices of the foreign like product in the home market to the COP of the product, we find reasonable grounds to believe or suspect that sales of the foreign like product were made below the COP within the meaning of section 773(b)(2)(A)(i) of the Act. Accordingly, the Department is initiating a country-wide cost investigation.

Pursuant to sections 773(a)(4), 773(b), and 773(e) of the Act, the petitioners also based NV for sales in Japan on constructed value (CV). The petitioners calculated CV using the same figures for COM, SG&A expenses, and packing costs they used to compute Japanese home-market costs. Consistent with section 773(e)(2) of the Act, the petitioners also added to CV an amount for profit, which was based upon Aichi's 1999 financial statements.

The petitioners provided estimated dumping margins in two ways: (1) Home market price (HMP) compared to EP (with margins ranging from 29.62 to 107.39 percent); (2) CV compared to EP (with margins ranging from 69.00 to 107.70 percent). As a result of our adjustments to the petitioners' calculations noted above, the revised HMP-to-EP and CV-to-EP comparisons result in margins that range from 29.80 to 105.97 percent and from 73.01 to 114.51 percent, respectively.

B. Korea

The petitioners identified Bae Myung Metal Co., Ltd. (Bae Myung), as a producer and an exporter of SSA from Korea. According to the petitioners, Bae Myung accounts for all the subject merchandise exported from Korea to the United States. The petitioners based EP on U.S. prices from Bae Myung to unaffiliated U.S. purchasers through distributors for two grades of SSA. The petitioners obtained these prices from U.S. industry sources. The petitioners made deductions from EP for C.I.F. charges, including ocean freight and insurance (from official U.S. import statistics), duties (from the HTSUS), harbor-maintenance and merchandise-processing fees, and U.S. and foreign inland freight. In addition, with respect to sales made through distributors, the petitioners adjusted the U.S. prices downward for a distributor mark-up based on pricing data they submitted in the petition.

With respect to NV, the petitioners provided Bae Myung's home-market prices for two grades of SSA sold to unaffiliated home-market customers which they obtained from foreign market research. These products are comparable to the products exported to the United States which served as the basis for EP. The prices the petitioners used in the calculation of NV were delivered prices, exclusive of taxes. The petitioners made a deduction from NV for foreign inland freight which they also obtained from foreign market research. Pursuant to section 773(a)(6)(C)(iii) of the Act and 19 CFR 351.410(c), the petitioners made a circumstance-of-sale adjustment for differences in credit expenses between home-market and U.S. sales. The petitioners did not adjust the prices for differences in packing costs because they assumed that packing costs were the same for both markets.

In addition, the petitioners provided information demonstrating reasonable grounds to believe or suspect that sales of SSA in the home market were made at prices below the COP within the meaning of section 773(b) of the Act, and they requested that the Department conduct a country-wide sales-below-cost investigation.

Pursuant to section 773(b)(3) of the Act, COP consists of the COM, SG&A expenses (which include financial expenses), and packing costs. To

calculate Bae Myung's COM, the petitioners relied upon their own production experience, adjusted for known differences between costs incurred to produce SSA in the United States and in Korea using information they obtained through market research and publicly available data. To calculate SG&A expenses, the petitioners relied upon the 1999 financial statements of Pohang Iron and Steel Co. (POSCO), a Korean integrated steel manufacturer.

Based upon the comparison of the adjusted prices of the foreign like product in the home market to the COP of the product, we find reasonable grounds to believe or suspect that sales of the foreign like product were made below the COP within the meaning of section 773(b)(2)(A)(i) of the Act. Accordingly, the Department is initiating a country-wide cost investigation.

Pursuant to sections 773(a)(4), 773(b), and 773(e) of the Act, the petitioners also based NV for sales in Korea on CV. The petitioners calculated CV using the same figures for COM, SG&A expenses, and packing costs they used to compute Korean home-market costs. Consistent with section 773(e)(2) of the Act, the petitioners also added to CV an amount for profit, which was based on POSCO's 1999 financial statements. Because the petitioners' calculation of the profit percentage applied to COP excluded net interest expense from the denominator incorrectly, we recalculated the profit percentage to include this amount accordingly. (See IA Initiation Checklist for further discussion.)

The petitioners provided estimated dumping margins in two ways: (1) HMP compared to EP (with margins ranging from 2.89 to 53.49 percent); (2) CV compared to EP (with margins ranging from 60.45 to 101.15 percent). As a result of our adjustments to the petitioners' calculations noted above, the revised CV-to-EP comparisons result in margins that range from 59.19 to 99.56 percent.

C. Spain

The petitioners identified Roldan, S.A. (Roldan), as a producer and an exporter of SSA from Spain. According to the petitioners, Roldan accounts for the vast majority of the subject merchandise exported from Spain to the United States. The petitioners based EP on C.I.F. U.S. prices from Roldan to a U.S. distributor and through a U.S. distributor to an unaffiliated U.S. purchaser for two grades of SSA. The petitioners obtained these prices from market research. The petitioners made deductions from EP for C.I.F. charges, including ocean freight and insurance (from official U.S. import statistics), duties (from the HTSUS), harbor-maintenance and merchandise-processing fees, and U.S. and foreign inland freight. In addition, with respect to sales made through the distributor, the petitioners adjusted the U.S. prices downward for a distributor mark-up based on pricing data submitted in the petition.

With respect to NV, the petitioners provided Roldan's home-market prices for two grades of SSA sold to unaffiliated home-market customers which they obtained from foreign market research. These products are comparable to the products exported to the United States which served as the basis for EP. The prices used in the calculation of NV were delivered prices, exclusive of taxes. The petitioners made a deduction from NV for foreign inland freight which they also obtained from foreign market research. Pursuant to section 773 (a)(6)(C)(iii) of the Act and 19 CFR 351.410(c), the petitioners made a circumstance-of-sale adjustment for differences in credit expenses between home-market and U.S. sales. The petitioners did not adjust the prices for differences in packing costs because they assumed that packing costs were the same for both markets.

In addition, the petitioners provided information demonstrating reasonable grounds to believe or suspect that sales of SSA in the home market were made at prices below the COP within the meaning of section 773(b) of the Act, and they requested that the Department conduct a country-wide sales-below-cost investigation.

Pursuant to section 773(b)(3) of the Act, COP consists of the COM, SG&A expenses (which include financial expenses), and packing costs. To calculate Roldan's COM, the petitioners relied upon their own production experience, adjusted for known differences between costs incurred to produce SSA in the United States and in Spain using information obtained through market research and publicly available data. To calculate SG&A expenses, the petitioners relied upon Roldan's 1999 financial statements and the financial statements of its parent company, Acerinox.

Based upon the comparison of the adjusted prices of the foreign like product in the home market to the revised COP of the product, we find reasonable grounds to believe or suspect that sales of the foreign like product were made below the COP within the meaning of section 773(b)(2)(A)(i) of the Act. Accordingly, the Department is initiating a country-wide cost investigation.

Pursuant to sections 773(a)(4), 773(b), and 773(e) of the Act, the petitioners also based NV for sales in Spain on constructed value (CV). The petitioners calculated CV using the same figures for COM, SG&A expenses and packing costs used to compute Spanish home-market costs. Consistent with section 773(e)(2) of the Act, the petitioners also added to CV an amount for profit, which was based upon Roldan's 1999 financial statements.

The petitioners provided estimated dumping margins in two ways: (1) HMP compared to EP (with margins ranging from 6.89 to 36.92 percent); (2) CV compared to EP. The petitioners based their CV-to-EP comparisons on two sales which resulted in the same margin of 61.45 percent.

Fair Value Comparisons

Based on the data provided by the petitioners, there is reason to believe that imports of SSA from Japan, Korea, and Spain are being, or are likely to be, sold at less than fair value.

Allegations and Evidence of Material Injury and Causation

The petitioners allege that the U.S. industry producing the domestic like product is being materially injured, and is threatened with material injury, by reason of the individual and cumulated imports of the subject merchandise sold at less than NV. The petitioners explain that the industry's injured condition is evident in the declining trends in net operating profits, net sales volumes, profit-to-sales ratios, and capacity utilization. The allegations of injury and causation are supported by relevant evidence including U.S. Customs import data, lost sales, and pricing information. The Department assessed the allegations and supporting evidence regarding material injury and causation and determined that these allegations are supported by accurate and adequate evidence and meet the statutory requirements for initiation. (See IA Initiation Checklists.)

Initiation of Antidumping Investigations

Based upon our examination of the petitions on SSA and the petitioners' responses to our supplemental questionnaires clarifying the petitions, as well as our discussion with the authors of the market-research reports supporting the petitions on Japan, Korea, and Spain and other measures undertaken to confirm the information contained in these reports (see IA Initiation Checklists), we have found that the petitions meet the requirements of section 732 of the Act. Therefore, we

are initiating antidumping duty investigations to determine whether imports of SSA from Japan, Korea, and Spain are being, or are likely to be, sold in the United States at less than fair value. Unless this deadline is extended, we will make our preliminary determinations no later than 140 days after the date of initiation.

Distribution of Copies of the Petitions

In accordance with section 732(b)(3)(A) of the Act, a copy of the public version of each petition has been provided to the representatives of Japan, Korea, and Spain. We will attempt to provide a copy of the public version of the appropriate petition to each exporter named in the petition.

International Trade Commission Notification

We have notified the ITC of our initiations as required by section 732(d) of the Act.

Preliminary Determinations by the ITC

The ITC will determine, by October 2, 2000, whether there is a reasonable indication that imports of SSA from Japan, Korea and Spain are causing material injury, or threatening to cause material injury, to a U.S. industry. A negative ITC determination for any country will result in the investigation being terminated with respect to that country; otherwise, these investigations will proceed according to statutory and regulatory time limits.

This notice is published pursuant to section 777(i) of the Act.

Dated: September 7, 2000.

Troy H. Cribb,

Acting Assistant Secretary for Import Administration.

[FR Doc. 00–23685 Filed 9–13–00; 8:45 am]

BILLING CODE 3510–DS–P

DEPARTMENT OF COMMERCE

International Trade Administration

[A–570–815]

Sulfanilic Acid From the People's Republic of China; Preliminary Results of Antidumping Duty Administrative Review

AGENCY: Import Administration, International Trade Administration, Department of Commerce.

ACTION: Notice of preliminary results of antidumping duty administrative review.

SUMMARY: The Department of Commerce (the Department) is conducting an administrative review of the antidumping duty order on sulfanilic acid from the People's Republic of China. The review covers exports of this merchandise to the United States for the period August 1, 1998, through July 31, 1999, and two firms: Zhenxing Chemical Industry Company (Zhenxing) and Yude Chemical Industry Company (Yude). The preliminary results of this review indicate that the two responding parties, Zhenxing and Yude, failed to cooperate by not acting to the best of their ability in responding to our requests for information. Consequently, we have preliminarily decided to use the single margin ''PRC rate'' as adverse facts available with respect to Zhenxing and Yude, which is listed below in the ''Preliminary Results of the Review'' section of this notice.

EFFECTIVE DATE: September 14, 2000.

FOR FURTHER INFORMATION CONTACT: Sean Carey or Dana Mermelstein, Import Administration, International Trade Administration, U.S. Department of Commerce, 14th Street and Constitution Avenue N.W., Washington, DC 20230 at (202) 482–3964 or (202) 482–1391, respectively.

SUPPLEMENTARY INFORMATION:

Applicable Statute and Regulations

Unless otherwise indicated, all citations to the statute are references to the provisions effective January 1, 1995, the effective date of the amendments made to the Tariff Act of 1930 (the Tariff Act) by the Uruguay Round Agreements Act (URAA). In addition, unless otherwise indicated, all citations to the Department's regulations are to the regulations codified at 19 CFR Part 351 (1999).

Background

On August 11, 1999, the Department published in the **Federal Register** (64 FR 43649) a notice of ''Opportunity to Request Administrative Review'' for the August 1, 1998, through July 31, 1999, period of review (POR) of the antidumping duty order on Sulfanilic Acid from the People's Republic of China, 57 FR 37524 (August 19, 1992). In accordance with 19 CFR 351.213, respondents Zhenxing, Yude, PHT International, Inc. (PHT), and the petitioner, Nation Ford Chemical Company, requested a review for the aforementioned period. On October 1, 1999, we published a notice of ''Initiation of Antidumping Review.'' *See* 64 FR 53318. The Department is now conducting this administrative review pursuant to section 751(a) of the Tariff Act.

On November 12, 1999, Zhenxing and Yude, two companies which are described as joint ventures between Chinese companies and a U.S.-based company named PHT, reported in their responses to Section A (Organization, Accounting Practices, Markets and Merchandise) of the Department's questionnaire that they each had made sales of subject merchandise to the United States during the POR. Zhenxing and Yude submitted responses to Sections C and D (Sales to the United States and Factors of Production, respectively) on December 21, 1999. Responses to three supplemental questionnaires by Zhenxing and Yude were received on April 24, 2000 (first and second supplemental questionnaires), and June 7, 2000. Information pertaining to surrogate values was submitted by petitioner and respondents on May 15, 2000, and August 10, 2000, respectively. Zhenxing submitted corrections to Section D regarding the factors of production for labor on June 29, 2000.

Scope of Review

Imports covered by this review are all grades of sulfanilic acid, which include technical (or crude) sulfanilic acid, refined (or purified) sulfanilic acid and sodium salt of sulfanilic acid.

Sulfanilic acid is a synthetic organic chemical produced from the direct sulfonation of aniline with sulfuric acid. Sulfanilic acid is used as a raw material in the production of optical brighteners, food colors, specialty dyes, and concrete additives. The principal differences between the grades are the undesirable quantities of residual aniline and alkali insoluble materials present in the sulfanilic acid. All grades are available as dry, free flowing powders.

Technical sulfanilic acid, classifiable under the subheading 2921.42.24 of the Harmonized Tariff Schedule (HTS), contains 96 percent minimum sulfanilic acid, 1.0 percent maximum aniline, and 1.0 percent maximum alkali insoluble materials. Refined sulfanilic acid, also classifiable under the subheading 2921.42.24 of the HTS, contains 98 percent minimum sulfanilic acid, 0.5 percent maximum aniline and 0.25 percent maximum alkali insoluble materials.

Sodium salt (sodium sulfanilate), classifiable under the HTS subheading 2921.42.79, is a powder, granular or crystalline material which contains 75 percent minimum equivalent sulfanilic acid, 0.5 percent maximum aniline based on the equivalent sulfanilic acid content, and 0.25 percent maximum alkali insoluble materials based on the equivalent sulfanilic acid content.

Although the HTS subheadings are provided for convenience and customs

purposes, our written description of the scope of this proceeding is dispositive.

Period of Review

The review period is August 1, 1998 through July 31, 1999.

Verification

As provided in section 782(i) of the Tariff Act, we verified information provided by the respondents using standard verification procedures, including on-site inspection of the manufacturer's facilities and the examination of relevant sales and financial records. Our verification results will be outlined in a verification report to be issued presently. A public version of this, and all memoranda generated by the Department, will be on file in the Department's Central Records Unit (CRU) located in room B–099 of the Department's main building.

Request for Revocation

In conjunction with respondents' request for a review submitted on August 31, 1999, Zhenxing and Yude also requested revocation of the antidumping duty order on sulfanilic acid from China with respect to their sales of this merchandise. Respondents' request for partial revocation was not in accordance with 19 CFR 351.222(e) because it was not accompanied by a certification that Zhenxing and Yude had not sold the subject merchandise at less than normal value for a three-year period, and would not do so in the future. Furthermore, in the 1997–1998 administrative review of sulfanilic acid from the PRC we determined that Zhenxing and Yude sold sulfanilic acid at less than normal value. See Final Results of Anitdumping Duty Administrative Review: Sulfanilic Acid from the People's Republic of China, 65 FR 13366 (March 13, 2000). Finally, as discussed below, we find in the current review that Zhenxing and Yude had sales at less than normal value. *See,* ''Use of Facts Otherwise Available'' below. Consequently, we preliminarily determine that because Zhenxing and Yude did not file a proper request for revocation, and do not have three consecutive years of zero or *de minimis* margins on sulfanilic acid, they are not eligible for partial revocation of the order on sulfanilic acid under 19 CFR 351.222(b)(1)(i).

Determination of Producers

In the 1997–1998 review the Department determined that Zhenxing and Yude were separate entities and that Zhenxing was affiliated with Mancheng Zhenxing Chemical Factory (Mancheng) while Yude was affiliated with Mancheng Xinyu Chemical Factory (Xinyu). We again reviewed this matter in the instant review and the Department preliminarily determines that Mancheng and Xinyu do not exist as separate entities. Rather, when Mancheng and Xinyu each entered into joint venture agreements with PHT, the resulting joint ventures took the names Zhenxing and Yude, respectively. *See* Zhenxing's and Yude's supplemental questionnaire response dated April 24, 2000. Record evidence indicates that Zhenxing and Yude did not produce or sell any products for domestic consumption or export under the names Mancheng or Xinyu during the POR. *See* Zhenxing's and Yude's response to the Department's first and second supplemental questionnaires, dated April 24, 2000.

Separate Rates

It is the Department's standard policy to assign all exporters of the merchandise subject to review in non-market economy countries a single rate, unless an exporter can affirmatively demonstrate an absence of government control, both in law (*de jure*) and in fact (*de facto*), with respect to exports. To establish whether a company is sufficiently independent to be entitled to a separate, company-specific rate, the Department analyzes each exporting entity in a non-market economy (NME) country under the test established in the Final Determination of Sales at Less Than Fair Value: Sparklers from the People's Republic of China, 56 FR 20588 (May 6, 1991) (Sparklers), as amplified by the Final Determination of Sales at Less Than Fair Value: Silicon Carbide from the People's Republic of China, 59 FR 22585 (May 2, 1994) (Silicon Carbide).

Accordingly, Zhenxing and Yude both submitted responses to the Department's Section A questionnaire in order to obtain separate, company-specific rates. As a result of our preliminary determination that the responses are not reliable, however (see below), the Department is not granting separate rates to those companies and is assigning the rate of 85.20 as the PRC-wide rate, which also will apply to Zhenxing and Yude.

Use of Facts Otherwise Available

Section 776(a)(2) of the Tariff Act provides that ''if an interested party or any other person (A) withholds information that has been requested by the administering authority; (B) fails to provide such information by the deadlines for the submission of the information or in the form and manner requested, subject to subsections (c)(1) and (e) of section 782; (C) significantly impedes a proceeding under this title; or (D) provides such information but the information cannot be verified as provided in section 782(i), the administering authority shall, subject to section 782(d), use the facts otherwise available in reaching the applicable determination under this title.'' The Department has determined that the use of facts otherwise available is appropriate because respondents failed to provide information by the deadlines established by the Department, and some of the information provided could not be verified. Therefore, pursuant to section 776(a)(2)(B) and (D) of the Tariff Act, the Department will use the facts otherwise available to determine the appropriate antidumping margins for these companies in this review. We note that, after disregarding the untimely and unverifiable information, the remaining information is too incomplete to serve as a reliable basis for determining dumping margins for Zhenxing and Yude in this review, within the meaning of section 782(e).

We preliminarily determine that the questionnaire response submitted by Yude is incomplete or contradictory to the point that serious concerns remain regarding the basic reliability of the data. The Department had requested on October 15, 1999, that Yude provide complete factors of production information. *See* Department's Antidumping Questionnaire. The deadline for such submission was December 21, 1999, on which day Yude submitted its factors of production information. *See* Yude's response to Sections C and D (Sales to the United States and Factors of Production) of the Department's questionnaire. The Department notified Yude on June 7, 2000, that it would conduct verification. *See* the Department's letters to Zhenxing and Yude with attached verification agendas. Although Yude had submitted on December 21, 1999 what it asserted were complete factors of production, Yude informed the Department on June 15, 2000, at the beginning of verification, that its previously submitted complete factors of production were incorrect and needed to be changed. This notification came eight months after the information was requested, six months after it was due and initially submitted, and not until verification had already commenced. The Department noted at verification that the changes to Yude's factors of production were of such significance that they constituted a new response, and declined to accept or verify these values. See Verification Report at 2.

Further, pursuant to section 782(e) of the Tariff Act, the Department declined to consider the new factors of production information proffered by Yude at verification because the information was not timely submitted by the deadline established by the Department. We preliminarily determine that Yude failed to act to the best of its ability in providing complete, verifiable responses to our requests for information and meeting our requirements because it made no effort to notify the Department promptly upon discovering that its factors of production information was incorrect.

The Department also discovered at verification a substantial number of unreported sales of sulfanilic acid produced by Zhenxing and sold to an unaffiliated U.S. importer. The discovery of these sales contradicted the information submitted in Zhenxing's response to Section A of the Department's questionnaire, in which Zhenxing reported that all of its U.S. sales during the POR were to PHT. On June 20, 2000, as part of our overall verification in this review, we reviewed the records of an import/export corporation (''Company B'')[1] involved with sales of sulfanilic acid produced by Zhenxing and sold to PHT. During this portion of the verification we discovered in Company B's records value-added tax rebates received on export sales of sulfanilic acid. We made several attempts to ascertain the quantity of subject merchandise sold, as well as the identity of the purchaser(s). However, Company B could not account for the revenue received from these sales in its accounting records, and failed to provide the customer's name and final foreign destination of these sales. *See* verification report at 10 and 11. On June 22, 2000, following our verification of Company B and during our verification of Zhenxing, Zhenxing provided us, unsolicited, a number of value-added (VAT) invoices related to these sales through Company B which identify an unaffiliated U.S. importer as the purchaser of sulfanilic acid produced by Zhenxing. The existence of these sales could not be verified in Zhenxing's records, as these only reflected sales by Zhenxing to PHT in the United States, and not the previously unreported sales through Company B to the unaffiliated U.S. importer. *See* verification report at 13 and 14. Accordingly, we determine that use of facts otherwise available pursuant to section 776(a)(2)(D) is appropriate for Zhenxing because Zhenxing has not acted to the best of its ability in reporting all of its POR sales to the United States, as the Department had requested.

Section 776(b) of the Tariff Act provides that if the Department finds that an interested party has failed to cooperate by not acting to the best of its ability to comply with a request for information, the Department may use an inference that is adverse to the interests of that party in selecting from among the facts otherwise available. The Department determines that Yude has not complied to the best of its ability because it failed to meet the deadlines for requested information, despite having ample opportunity to update and correct its submission on factors of production. Yude not only failed to notify the Department of the need for wholesale changes in its factors of production when it became apparent that its original submission was incorrect, but it waited until verification had commenced to provide entirely new information.

The Department finds that Zhenxing also did not act to the best of its ability because it failed to provide complete and verifiable sales information. It was not until the Department discovered the unidentified sales by Company B that it provided the unreported sales information. Zhenxing failed to cooperate by not acting to the best of its ability until confronted with this new information, thereby warranting the Department's use of adverse fact available in determining Zhenxing's rate. Even after the information regarding unreported sales came to light, Zhenxing was unable to provide any information from its records to assist in verifying the matter.

Section 776(b) also authorizes the Department to use, as adverse facts available, information derived from the petition, the final determination, a previous administrative review, or other information placed on the record. The Statement of Administrative Action (SAA) accompanying the URAA clarifies that information from the petition and prior segments of the proceeding is ''secondary information.'' *See* H.Doc. 3216, 103rd Cong. 2d Sess. 870 (1994). If the Department relies on secondary information as facts available, section 776(c) provides that the Department shall, to the extent practicable, corroborate such information using independent sources reasonably at its disposal. The SAA further provides that ''corroborate'' means simply that the Department will satisfy itself that the secondary information to be used has probative value. *See id.* The SAA also states that independent sources used for corroboration may include, for example, published price lists, official import statistics and customs data, and information obtained from interested parties during the particular investigation. *See id.* However, where corroboration is not practicable, that fact will not prevent the Department from applying an adverse inference and using the secondary information in question. *See* 19 CFR 351.308(d).

When making adverse inferences, the SAA authorizes the Department to consider the extent to which a party may benefit from its own lack of cooperation (SAA at 870). Because the PRC-wide rate that was applicable during the POR and that is applicable to current imports is 85.20 percent, a rate derived from the petition, the Department determines that assigning a 85.20 percent rate will prevent non-responding firms from benefitting from their failure to respond to the Department's requests for information. Anything less than the current cash deposit rate would effectively reward non-responding firms for not cooperating by not acting to the best of their ability.

In accordance with the law, the Department, to the extent practicable, will corroborate secondary information by examining the reliability and relevance of the information used. However, in an administrative review the Department will not engage in updating the petition to reflect the prices and costs that are found during the current review. Rather, corroboration consists of determining that the significant elements used to derive a margin in a petition are reliable for the conditions upon which the petition is based. With respect to the relevance aspect of corroboration, the Department will consider the information reasonably at its disposal as to whether there are circumstances that would render a margin not relevant.

To corroborate the LTFV rate of 85.20 percent, we examined the basis of the rates contained in the petition of October 8, 1991. The U.S. price in the petition was based on actual prices from customer purchase orders, invoices and price quotations for refined sulfanilic acid from the PRC. This U.S. price covers delivery to the customer's point of usage. We were able to corroborate the average unit values listed in the petition by comparing those values to publicly available information compiled by the U.S. Census Bureau and made available by the International Trade Commission (ITC). The ITC reports quantity and value by HTS numbers. Using the same HTS numbers as listed

[1] This firm's identity has been accorded treatment as business proprietary information.

in the petition (HTS 2921.42.24, 2921.42.79, and 2921.42.79), we divided the total quantity by the total value for the period referenced in the petition and noted the average unit values were very similar to those reported in the original petition.

The petition also states that due to the non-market economy status of the PRC, the foreign market value was calculated using a factors of production methodology. Based on the production experience of the petitioners, the petition identified actual factors of production for subject merchandise. Such factors include: labor, raw material, energy, overhead, and general selling and administrative expenses. To value these factors of production, the petition used published costs in India for the above-mentioned factors as surrogate values for those in the PRC. *See* Antidumping Petition on Sulfanilic Acid from the People's Republic of China dated October 2, 1991, and found in the CRU. Because petitioners used published, publicly available data for valuing the major inputs, we consider these data to have probative value.

The SAA at 870 specifically states that where ''corroboration may not be practicable in a given circumstance,'' the Department may nevertheless apply an adverse inference. The SAA at 869 emphasizes that the Department need not prove that the facts available are the best alternative information. Therefore, based on our efforts, described above, to corroborate information contained in the petition, and mindful of the legislative history discussing facts available and corroboration, we consider the petition margin we are assigning to non-responding firms in this review as adverse facts available to be corroborated to the extent practicable.

Finally, we note that where circumstances indicate that the selected margin is not appropriate as adverse facts available, the Department will disregard the margin and determine an appropriate margin. See Fresh Cut Flowers from Mexico; Preliminary Results of Antidumping Duty Administrative Review, 60 FR 49567 (September 26, 1995). We have determined that there is no evidence on the record that would indicate that the margin from the petition is not appropriate. Nothing on the record of this administrative review supports a determination that the highest margin rate from the petition in the underlying investigation does not represent reliable and relevant information for purposes of adverse facts available. This rate has been used as the PRC-wide rate since the Department's Final Determination of Sales at Less Than Fair Value: Sulfanilic Acid from the People's Republic of China, 57 FR 29705 (July 6, 1992).

Preliminary Results of the Review

We preliminarily determine to use the rate of 85.20 percent as the adverse facts available for the period August 1, 1998 through July 31, 1999 for all firms which have not demonstrated that they are entitled to separate rates, including Zhenxing and Yude.

Pursuant to 19 CFR 351.224(b), the Department will disclose to parties to the proceeding any calculations performed in connection with these preliminary results within five (5) days after the date of publication of this notice. Pursuant to 19 CFR 351.309, interested parties may submit written comments in response to these preliminary results. Case briefs are currently scheduled for submission within 30 days after the date of publication of this notice, and rebuttal briefs, limited to arguments raised in case briefs, must be submitted no later than five (5) days after the time limit for filing case briefs. Parties who submit argument in this proceeding are requested to submit with the argument: (1) A statement of the issue, and (2) a brief summary of the argument. Case and rebuttal briefs must be served on interested parties in accordance with 19 CFR 351.303(f). Also, pursuant to 19 CFR 351.310, within 30 days of the date of publication of this notice, interested parties may request a public hearing on arguments to be raised in the case and rebuttal briefs. Unless the Secretary specifies otherwise, the hearing, if requested, will be held two days after the deadline for submission of rebuttal briefs. The Department will issue the final results of this administrative review, including its analysis of issues raised in any case or rebuttal brief or at a hearing, not later than 120 days after the date of publication of this notice.

The Department shall determine, and the Customs Service shall assess, antidumping duties on all appropriate entries. Upon completion of this review, the Department will issue appraisement instructions directly to the Customs Service.

Furthermore, upon issuance of the final results of this review, the following deposit rates will be effective with respect to all shipments of sulfanilic acid from the PRC entered, or withdrawn from warehouse, for consumption on or after the publication date of the final results of this review, as provided for by section 751(a)(2)(c) of the Tariff Act: (1) The cash deposit rate for reviewed companies listed above will be the rates for those firms established in the final results of this review; (2) for companies previously found to be entitled to a separate rate and for which no review was requested, the cash deposit rate will be the rate established in the most recent review of that company; (3) for all other PRC exporters of subject merchandise, the cash deposit rate will be the China-wide rate of 85.20 percent; and (4) the cash deposit rate for non-PRC exporters of subject merchandise from the PRC will be the rate applicable to the PRC supplier of that exporter. These deposit requirements, when imposed, shall remain in effect until publication of the final results of the next administrative review.

Notification of Interested Parties

This notice serves as a preliminary reminder to importers of their responsibility under section 351.402 of the Department's regulations to file a certificate regarding the reimbursement of antidumping duties prior to liquidation of the relevant entries during this review period. Failure to comply with this requirement could result in the Secretary's presumption that reimbursement of antidumping duties occurred and the subsequent assessment of double antidumping duties.

This administrative review and notice are in accordance with sections 751(a)(1) and 771 (i)(1) of the Tariff Act.

Dated: August 30, 2000.

Troy H. Cribb,

Acting Assistant Secretary for Import Administration.

[FR Doc. 00–23689 Filed 9–13–00; 8:45 am]

BILLING CODE 3510–DS–P

DEPARTMENT OF COMMERCE

International Trade Administration

University of Texas at San Antonio; Notice of Decision on Application for Duty-Free Entry of Electron Microscope

This is a decision pursuant to Section 6(c) of the Educational, Scientific, and Cultural Materials Importation Act of 1966 (Pub. L. 89–651, 80 Stat. 897; 15 CFR part 301). Related records can be viewed between 8:30 A.M. and 5:00 P.M. in Room 4211, U.S. Department of Commerce, 14th and Constitution Avenue, N.W., Washington, D.C.

Docket Number: 00–026. *Applicant:* University of Texas at San Antonio, San Antonio, TX 78249–0662. *Instrument:* Electron Microscope, Model JEM–1230. *Manufacturer:* JEOL, Ltd., Japan. *Intended Use:* See notice at 65 FR

49966, August 16, 2000. *Order Date:* June 29, 2000.

Comments: None received. *Decision:* Approved. No instrument of equivalent scientific value to the foreign instrument, for such purposes as the instrument is intended to be used, was being manufactured in the United States at the time the instrument was ordered. *Reasons:* The foreign instrument is a conventional transmission electron microscope (CTEM) and is intended for research or scientific educational uses requiring a CTEM. We know of no CTEM, or any other instrument suited to these purposes, which was being manufactured in the United States at the time of order of the instrument.

Gerald A. Zerdy,

Program Manager, Statutory Import Programs Staff.

[FR Doc. 00–23688 Filed 9–13–00; 8:45 am]

BILLING CODE 3510–DS–P

DEPARTMENT OF DEFENSE

Department of the Air Force

Proposed Collection; Comment Request

AGENCY: Department of the Air Force, DoD.

ACTION: Notice.

In compliance with Section 3502(c)(2)(A) of the Paperwork Reduction Act of 1995, the Associate Director for Civil Aviation, Directorate of Operations and Training, Deputy Chief of Staff for Air and Space Operations, announces the proposed reinstatement of a public information collection and seeks public comment on the provisions thereof. Comments are invited on: (a) The accuracy of the agency's estimate of the burden of the proposed information collection; (b) ways to enhance the quality, utility, and clarity of the information to be collected; and (c) ways to minimize the burden of the information collection on respondents, including through the use of automated collection techniques or other forms of information technology.

DATES: Consideration will be given to all comments received by November 13, 2000.

ADDRESSES: Written comments and recommendations on the proposed information collection should be sent to HQ USAF/XOO–CA, 1480 Air Force Pentagon, Washington, DC 20330–1480.

FOR FURTHER INFORMATION CONTACT: To request more information on this proposed information collection or to obtain a copy of the proposal and associated collection instruments, please write to the address above or call (703) 697–1796.

Title, Associated Form, and OMB Number: Civil Aircraft Certificate of Insurance, DD Form 2400, OMB Number 0701–0050; Civil Aircraft Landing Permit, DD Form 2401, OMB Number 0701–0050; and DD Form 2402, Civil Aircraft Hold Harmless Agreement, OMB Number 0701–0050.

Needs and Uses: The collection of information is necessary to ensure that the security and operational integrity of military airfields are maintained; to identify the aircraft operator and the aircraft to be operated; to avoid competition with the private sector by establishing the purpose for use of military airfields; and to ensure the U.S. Government is not held liable if the civil aircraft becomes involved in an accident or incident while using military airfields, facilities, and services.

Affected Public: Civil aircraft owners/operators.

Annual Burden Hours: 1,800.

Number of Respondents: 3,600.

Responses per Respondent: 1.

Average Burden for Respondents: 30 Minutes.

Frequency: 1.

Annual Responses: 3,600.

SUPPLEMENTARY INFORMATION: None.

Janet A. Long,

Air Force Federal Register Liaison Officer.

[FR Doc. 00–23622 Filed 9–13–00; 8:45 am]

BILLING CODE 5001–05–P

DEPARTMENT OF DEFENSE

Department of the Air Force

Notice of Intent To Grant Exclusive Patent License

Pursuant to the provisions of Part 404 of Title 37, Code of Federal Regulations, which implements Public Law 96–517, the Department of the Air Force announces its intention to grant Intellisense Corporation, a company doing business in Wilmington, MA, exclusive licenses in any right, title and interest the Air Force has in U.S. Patent Numbers 6,028,689 entitled ''Multi-Motion Mirror,'' and 6,040,935 entitled ''Flexureless Multi-Stable Micromirrors for Optical Switching.'' The inventors of '689, M. Adrian Michalicek, Victor M. Bright and John H. Comtois; and the inventor of '935, M. Adrian Michalicek were government employees at the time of the respective inventions.

The licenses described above will be granted unless objection thereto, together with a request for an opportunity to be heard, if desired, are received in writing by the addressee set forth below within 60 days from the date of publication of this Notice. Information concerning the application may be obtained, on request, from the same addressee.

All communications concerning this Notice should be sent to Mr. Randy Heald, Associate General Counsel (Acquisition), SAF/GCQ, 1500 Wilson Blvd., Suite 304, Arlington, VA 22209–2310. Mr. Heald can be reached at 703–588–5091 or by fax at 703–588–8037.

Janet A. Long,

Air Force Federal Register Liaison Officer.

[FR Doc. 00–23623 Filed 9–13–00; 8:45 am]

BILLING CODE 5001–05–P

DEPARTMENT OF ENERGY

Federal Energy Regulatory Commission

[Docket No. CP97–168–005]

Alliance Pipeline L.P.; Notice of Amendment

September 8, 2000.

Take notice that on August 28, 2000, Alliance Pipeline L.P. (Alliance), 605–5th Avenue SW., Calgary, Alberta, Canada T2P 3H5, filed, pursuant to Section 7(c) of the Natural Gas Act (NGA) and Part 157 of the Federal Energy Regulatory Commission's (Commission) Regulations, in Docket No. CP97–168–005 for an amendment of the certificate of public convenience and necessity issued to Alliance on September 17, 1998, in Docket No. CP97–168–000, *et al.,*[1] to delete the authority to: (1) Construct and operate an interconnection with Natural Gas Pipline Company (NGPL); and (2) install a spare, backup compressor unit at the Tampico compressor station, all as more fully set forth in the application which is on file with the Commission and open to public inspection. This filing may be viewed on the web at http://www.ferc.fed.us/online/rims.htm (call 202–208–2222 for assistance).

Any questions regarding the application should be directed to Mr. William A. Williams, Attorney for Alliance, Fulbright & Jaworski L.L.P., 801 Pennsylvania Avenue NW., Washington, DC 20004–2615, or call (202) 662–4673.

Alliance states that the NGPL interconnect and the spare compressor unit at the Tampico compressor station that were authorized in the September 17, 1998 order are no longer needed. The NGPL interconnect is no longer

[1] *Alliance pipeline L.P.,* 84 FERC ¶ 61,239 (1998).

required because NGPL was granted authority, on June 7, 1999, in Docket No. CP99–546,[2] to construct and operate alternative interconnect facilities which, among other things, provide the capability for Alliance to deliver to NGPL up to 1.6 Bcfd, the same level authorized by the Alliance certificate order.

Additionally, Aux Sable Liquid Products L.P. (Aux Sable) has decided to construct a twin-train processing plant, as opposed to its originally contemplated one-train facility. Alliance explains that the redundancy built into the two-train design results in excess compression capability within the Aux Sable plant when both trains are operational. Alliance states that it may meet any need for spare or backup compression capability by utilizing the redundant compression capability within the Aux Sable plant.

Alliance states that, in its calculation of the initial rates filed in its August 4, 2000, application in Docket No. CP97–168–004, *et al.*, Alliance has reflected both the savings associated with the deletion of the spare unit at Tampico and the actual costs attributable to the alternative interconnect approved in the NGPL proceeding. Alliance argues that, while there may be costs associated with Alliance's use of the compression capability within the Aux Sable plant, it is far more cost effective and efficient for Alliance to rely upon that excess Aux Sable plant compression than to incur the $14 million capital cost of the spare unit at Tampico.

Alliance concludes that because this application involves the deletion of facilities previously certificated there will be no negative impact on the environment and no landowner will be affected. Additionally, Alliance avers that deletion of the subject facilities will have no effect upon Alliance's presently certificated services as the NGPL interconnect is replaced by an alternate interconnect with the same capability to deliver 1.6 Bcfd to NGPL, and, since no authorization had been granted to operate the spare compressor unit at Tampico, its elimination likewise has no effect on Alliance's ability to provide service to its customers.

Any person desiring to participate in the hearing process or to make any protest with reference to said application should on or before September 29, 2000, file with the Federal Energy Regulatory Commission, Washington, DC 20426, a motion to intervene or a protest in accordance with the requirements of the Commission's Rules of Practice and Procedure (18 CFR 385.214 or 385.211) and the Regulations under the NGA (18 CFR 157.10). All protests filed with the Commission will be considered by it in determining the appropriate action to be taken but will not serve to make the protestants parties to the proceeding. The Commission's rules require that protestors provide copies of their protests to the party or parties directly involved. Any person wishing to become a party to a proceeding or to participate as a party in any hearing therein must file a motion to intervene in accordance with the Commission's Rules.

Take further notice that, pursuant to the authority contained in and subject to the jurisdiction conferred upon the Federal Energy Regulatory Commission by Sections 7 and 15 of the NGA and the Commission's Rules of Practice and Procedure, a hearing will be held without further notice before the Commission or its designee on this application if no motion to intervene is filed within the time required herein, if the Commission on its own review of the matter finds that a grant of the certificate is required by the public convenience and necessity. If a motion for leave to intervene is timely filed, or if the Commission on its own motion believes that formal hearing is required, further notice of such hearing will be duly given.

Under the procedure provided for, unless otherwise advised, it will be unnecessary for Alliance to appear or be represented at the hearing.

David P. Boergers,

Secretary.

[FR Doc. 00–23599 Filed 9–13–00; 8:45 am]

BILLING CODE 6717–01–M

[2] *Natural Gas Pipeline Company,* 90 FERC ¶ 62,013 (2000).

DEPARTMENT OF ENERGY

Federal Energy Regulatory Commission

[Docket No. RP00–537–000]

Eastern Shore Natural Gas Company; Notice of Proposed Changes in FERC Gas Tariff

September 8, 2000.

Take notice that on September 1, 2000, Eastern Shore Natural Gas Company (Eastern Shore) tendered for filing as part of its FERC Gas Tariff, Second Revised Volume No. 1, the revised tariff sheets listed on Appendix A to the filing, proposed to be effective on March 27, 2000 and October 1, 2000, respectively.

Eastern Shore states that the purpose of this filing is to: (1) Remove the maximum price cap for capacity release transactions of less than one year; and (2) make certain modifications to its Right of First Refusal provisions, in order to comply with the requirements of FERC Order Nos. 637, 637–A and 637–B, respectively.

Eastern Shore states that a copy has been mailed to its customers and interested state commissions.

Any person desiring to be heard or to protest said filing should file a motion to intervene or a protest with the Federal Energy Regulatory Commission, 888 First Street, NE., Washington, DC 20426, in accordance with Sections 385.214 or 385.211 of the Commission's Rules and Regulations. All such motions or protests must be filed in accordance with Section 154.210 of the Commission's Regulations. Protests will be considered by the Commission in determining the appropriate action to be taken, but will not serve to make protestants parties to the proceedings. Any person wishing to become a party must file a motion to intervene. Copies of this filing are on file with the Commission and are available for public inspection in the Public Reference Room. This filing may be viewed on the web at http://www.ferc.fed.us/online/rims.htm (call 202–208–2222 for assistance).

David P. Boergers,

Secretary.

[FR Doc. 00–23600 Filed 9–13–00; 8:45 am]

BILLING CODE 6717–01–M

DEPARTMENT OF ENERGY

Federal Energy Regulatory Commission

[Docket No. CP00–453–000]

Michigan Gas Storage Company; Notice of Application

September 8, 2000.

Take notice that on September 1, 2000, Michigan Gas Storage Company (MGSCo), 212 West Michigan Avenue, Jackson, Michigan 49201, filed a request with the Commission in Docket No. CP00–453–000 pursuant to Section 7(c) of the Natural Gas Act (NGA) for authorization to construct and operate four wells and associated facilities in its Cranberry Lake Storage Field, Clare County, Michigan, all as more fully set forth in the application which is open to the public for inspection. This application may be viewed on the web at http://www.ferc.fed.us/online/

rims.htm (call 202–208–2222 for assistance).

MGSCo proposes to construct and operate four wells in the Cranberry Lake Storage Field to improve field deliverability. MGSCo states that it would drill the wells from a common surface pad location using horizontal drilling technology. The wells would have individual measurement facilities and be connected to the Cranberry Field Header by two 8-inch well laterals approximately 175 feet in length. All surface facilities, including the well laterals, would be located on a parcel of land owned by MGSCo. MGSCo also states that it needs the wells to shorten the withdrawal season so that more of the field working gas can be effectively cycled. MGSCo further states that it would drill the wells to more effectively drain the field in an area considered to be underutilized because of existing well spacing. MGSCo estimates that the proposed wells would cost an estimated $2,016,028 to install and that it would recover the cost in a future Section 4 rate proceeding.

Any person desiring to be heard or to make any protest with reference to said application should on or before September 29, 2000, file with the Federal Energy Regulatory Commission, 888 First Street, NE., Washington, DC 20426, a motion to intervene or a protest in accordance with the requirements of the Commission's Rules of Practice and Procedure (18 CFR 385.214 or 385.211) and the Regulations under the NGA (18 CFR 157.10). All protests filed with the Commission will be considered by it in determining the appropriate action to be taken but will not serve to make the protestants parties to the proceeding. Any person wishing to become a party to a proceeding or to participate as a party in any hearing therein must file a motion to intervene in accordance with the Commission's Rules. Any questions regarding the application should be directed to Francis X. Berkemeier, Attorney, Michigan Gas Storage Company, 212 West Michigan Avenue, Jackson, Michigan 49201, telephone (517) 788–2115.

A person obtaining intervenor status will be placed on the service list maintained by the Secretary of the Commission and will receive copies of all documents filed by the applicant and by everyone of the intervenors. An intervenor can file for rehearing of any Commission order and can petition for court review of any such order. However, an intervenor must submit copies of comments or any filing it makes with the Commission to every other intervenor in the proceeding, as well as 14 copies with the Commission.

A person does not have to intervene, however, in order to have comments considered. A person, instead, may submit two copies of comments to the Secretary of the Commission. Commenters will be placed on the Commission's environmental mailing list, will receive copies of environmental documents and will be able to participate in meetings associated with the Commission's environmental review process. Commenters will not be required to serve copies of filed documents on all other parties. However, commenters will not receive copies of all documents filed by other parties or issued by the Commission and will not have the right to seek rehearing or appeal the Commission's final order at a federal court.

The Commission will consider all comments and concerns equally, whether filed by commenters or those requesting intervenor status.

Take further notice that, pursuant to the authority contained in and subject to the jurisdiction conferred upon the Federal Energy Regulatory Commission by Sections 7 and 15 of the NGA and the Commission's Rules of Practice and Procedure, a hearing will be held without further notice before the Commission or its designee on this application if no motion to intervene is filed within the time required herein, if the Commission on its own review of the matter finds that the proposal is required by the public convenience and necessity. If a motion for leave to intervene is timely filed, or if the Commission on its own motion believes that a formal hearing is required, further notice of such hearing will be duly given.

Under the procedure herein provided for, unless otherwise advised, it will be unnecessary for MGSCo to appear or be represented at the hearing.

David P. Boergers,

Secretary.

[FR Doc. 00–23598 Filed 9–13–00; 8:45 am]

BILLING CODE 6717–01–M

DEPARTMENT OF ENERGY

Federal Energy Regulatory Commission

[Docket No. CP00–233–001]

Southern Natural Gas Company; Notice of Amendment

September 8, 2000.

Take notice that on August 31, 2000, Southern Natural Gas Company (Southern), Post Office Box 2563, Birmingham, Alabama 35202–2563, filed in Docket No. CP00–233–001 an amendment to its pending application filed in Docket No. CP00–233–000, to modify certain compression facilities from gas-fired to electric more driven and to reduce the length of one of the proposed loops, all as more fully set forth in the application to amend which is on file with the Commission and open to public inspection. This filing may be viewed on the web at http://www.ferc.fed.us/online/htm (call 202–208–2222 for assistance).

Southern proposes the following modifications to its initial application: (1) At the York Compressor Station (Phase I), delete the 4,700 horsepower Solar Centaur 40 turbine driven Centrifugal compressor and substitute a 15,000 horsepower, electric motor-driven Centrifugal compressor; (2) at the Auburn Compressor Station (Phase I), delete the 10,310 horsepower, Solar Taurus 70 turbine-driven Centrifugal compressor and substitute a 15,000 horsepower electric motor-driven Centrifugal compressor; (3) at the Selma Compressor Station (Phase II), delete the 10,310 horsepower, Solar Taurus 70 driven Centrifugal compressor and substitute a 15,000 horsepower motor driven Centrifugal compressor; and (4) reduce the length of the Phase II extension of Loop I by 5.69 miles so that Phase II, Loop would consist of approximately 4.70 miles of 30-inch South Main 3rd Loop Line extending from milepost 72.899 to milepost 77.6 in Clarke County, Mississippi.

Southern states that the change to electric motor-driven compression will require the installation of approximately 10.5 miles of non-jurisdictional power transmission lines to be installed and owned by Alabama Power Company (APC), an affiliate of Southern Company Services, Inc., one of the shippers for the South System Expansion project. It is indicated that the electricity will be supplied by APC under its Retail Rate Schedule LPTL, Light and Power-Time of Use-Large which is on file with the Alabama Public Service Commission.

Any questions regarding the amendment should be directed to Patrick B. Pope at (205) 325–7126.

Any person desiring to be heard or to make any protest with reference to said application should on or before September 29, 2000, file with the Federal Energy Regulatory Commission, 888 First Street, NE., Washington, DC 20426, a motion to intervene or a protest in accordance with the requirements of the Commission's Rules of Practice and Procedure (18 CFR 385.211 and 385.214) and the regulations under the Natural Gas Act (18 CFR 157.10). All

protests filed with the Commission will be considered by it in determining the appropriate action to be taken but will not serve to make the protestants parties to the proceeding. The Commission's rules require that protestors provide copies of their protests to the party or parties directly involved.

Any person wishing to become a party in any proceeding herein must file a motion to intervene in accordance with the Commission's rules.

A person obtaining intervenor status will be placed on the service list maintained by the Secretary of the Commission and will receive copies of all documents filed by the applicant and by every one of the intervenors. An intervenor can file for rehearing of any Commission order and can petition for court review of any such order. However, an intervenor must submit copies of comments or any filing it makes with the Commission to every other intervenor in the proceeding, as well as 14 copies with the Commission.

A person does not have to intervene, however, in order to have comments considered. A person, instead, may submit two copies of comments to the Secretary of the Commission. Commenters will be placed on the Commission's environmental mailing list, will receive copies of environmental documents and will be able to participate in meetings associated with the Commission's environmental review process. Commenters will not be required to serve copies of filed documents on all other parties. However, commenters will not receive copies of all documents filed by other parties or issued by the Commission and will not have the right to seek rehearing or appeal the Commission's final order to a federal court.

The Commission will consider all comments and concerns equally, whether filed by commenters or those requesting intervenor status.

Take further notice that, pursuant to the authority contained in and subject to the jurisdiction conferred upon the Commission by Sections 7 and 15 of the Natural Gas Act and the Commission's Rules of Practice and Procedure, a hearing will be held without further notice before the Commission or its designee on this application if no motion to intervene is filed within the time required herein, if the Commission on its own review of the matter finds that a grant of the certificate is required by the public convenience and necessity. If a motion for leave to intervene is timely filed, or if the Commission on its own motion believes that formal hearing is required, further notice of such hearing will be duly given.

Under the procedure herein provided for, unless otherwise advised, it will be unnecessary for Southern to appear or to be represented at the hearing.

David P. Boergers,

Secretary.

[FR Doc. 00–23597 Filed 9–13–00; 8:45 am]

BILLING CODE 6717–01–M

DEPARTMENT OF ENERGY

Federal Energy Regulatory Commission

[Docket No. GT00–36–000]

Texas Eastern Transmission Corporation; Notice of Compliance Report

September 8, 2000.

Take notice that on September 1, 2000, Texas Eastern Transmission Corporation (Texas Eastern) tendered for filing pursuant to Section 9.1 of the General Terms and Conditions of its FERC Gas Tariff, Sixth Revised Volume No. 1, its report of recalculated Operational Segment Capacity Entitlements to become effective November 1, 2000.

Texas Eastern states that the purpose of the filing is to make its report pursuant to Section 9.1 of the General Terms and Conditions of its FERC Gas Tariff, Sixth Revised Volume No. 1 of recalculated November 1, 2000 Operational Segment Capacity Entitlements, along with supporting documentation explaining the basis for changes.

Texas Eastern states that copies of the filing were served on all affected customers of Texas Eastern and interested state commissions.

Any person desiring to be heard or to protest said filing should file a motion to intervene or a protest with the Federal Energy Regulatory Commission, 888 First Street, NE., Washington, DC 20426, in accordance with Sections 385.214 or 385.211 of the Commission's Rules and Regulations. All such motions or protests must be filed on or before September 15, 2000. Protests will be considered by the Commission in determining the appropriate action to be taken, but will not serve to make protestants parties to the proceedings. Any person wishing to become a party must file a motion to intervene. Copies of this filing are on file with the Commission and are available for public inspection in the Public Reference Room. This filing may be viewed on the web at http://www.ferc.fed.us/online/rims.htm (call 202–208–2222 for assistance).

David P. Boegers,

Secretary.

[FR Doc. 00–23601 Filed 9–13–00; 8:45 am]

BILLING CODE 6717–01–M

DEPARTMENT OF ENERGY

Federal Energy Regulatory Commission

[Docket No. CP00–451–000]

Texas-Ohio Pipeline, Inc.; Notice of Application

September 8, 2000.

Take notice that on August 31, 2000, Texas-Ohio Pipeline, Inc. (Texas-Ohio), 1331 Seventeenth Street, Suite 601, Denver Colorado 80202, filed in Docket No. CP00–419–000 an application pursuant to Section 7(b) of the Natural Gas Act for permission and approval to abandon all of its remaining jurisdictional facilities and services, all as more fully set forth in the application on file with the Commission and open to public inspection. This filing may be viewed on the web at http://www.ferc.fed.us/online/htm (call 202–208–2222 for assistance).

Texas-Ohio proposes to abandon in place or by removal all of its remaining jurisdictional facilities in Garrard County, Kentucky including 600 feet of above-ground 10-inch pipeline, related values and piping and appurtenant facilities. It is stated that it received authorization in Docket No. CP00–419–000 to abandon a rental compressor unit. Texas-Ohio indicates that it has had no contracts for firm service since 1997 and that requests for interruptible service has been insignificant for more than three years. Texas-Ohio states that its facilities interconnected the facilities of Tennessee Gas Pipeline Company (Tennessee) and Texas Eastern Transmission Corporation (Texas Eastern) to eliminate bottlenecks on their respective systems. It is now indicated that that in 1998, Tennessee placed into operation an interconnecting facility with Texas Eastern which would further eliminate any further markets for Texas-Ohio's facilities. Accordingly, Texas-Ohio requests abandonment of its currently-effective Part 157 certificate and its Part 284 transportation certificate.

Any questions regarding the application should be directed to James D. Albright, Associate General Counsel of Xcel Energy Services, Inc., at (303) 294–2753.

Any person desiring to be heard or to make any protest with reference to said application should on or before September 29, 2000, file with the Federal Energy Regulatory Commission, 888 First Street, NE, Washington, DC 20426, a motion to intervene or a protest in accordance with the requirements of the Commission's Rules of Practice and Procedure (18 CFR 385.214 or 385.211) and the Regulations under the Natural Gas Act (18 CFR 157.10). All protests filed with the Commission will be considered by it in determining the appropriate action to be taken but will not serve to make the protestants parties to the proceeding. Any person wishing to become a party to a proceeding or to participate as a party in any hearing therein must file a motion to intervene in accordance with the Commission's Rules.

Take further notice that, pursuant to the authority contained in and subject to the jurisdiction conferred upon the Federal Energy Regulatory Commission by Sections 7 and 15 of the Natural Gas Act and the Commission's Rules of Practice and Procedure, a hearing will be held without further notice before the Commission or its designee on this application if not motion to intervene is filed within the time required herein, if the Commission on its own review of the matter finds that a grant of the certificate is required by the public convenience and necessity. If a motion for leave to intervene is timely filed, or if the Commission on its own motion believes that a formal hearing is required, further notice of such hearing will be duly given.

Under the procedure herein provided for, unless otherwise advised, it will be unnecessary for Texas-Ohio to appear or be represented at the hearing.

David P. Boergers,

Secretary.

[FR Doc. 00–23595 Filed 9–13–00; 8:45 am]

BILLING CODE 6717–01–M

DEPARTMENT OF ENERGY

Federal Energy Regulatory Commission

[Docket No. ER00–2775–001, et al.]

MidAmerican Energy Company, et al.; Electric Rate and Corporate Regulation Filings

September 7, 2000.

Take notice that the following filings have been made with the Commission:

1. MidAmerican Energy Company

[Docket No. ER00–2775–001]

Take notice that on September 1, 2000, MidAmerican Energy Company (MidAmerican), 666 Grand Avenue, Des Moines, Iowa 50309, tendered for filing with the Commission an Electric Interchange and Interconnection Agreement dated January 24, 1994, modified by way of a First Amendment to Electric Interchange and Interconnection Agreement dated April 26, 2000, entered into with Indianola Waterworks and Electric Light and Power Board of Trustees, pursuant to MidAmerican's Rate Schedule for Power Sales, FERC Electric Tariff, Original Volume No. 8.

MidAmerican requested and the Director, Division of Tariffs and Rates—Central, approved a June 9, 2000 effective date for the Electric Interchange and Interconnection Agreement, as amended, subject to MidAmerican making a compliance filing to conform MidAmerican's previous filing in this matter dated June 29, 2000 to be consistent with the necessary filing rate schedule designations as required by Order 614, FERC Stats. & Regs. ¶ 31,096 (2000) and *Southwest Power Pool Inc.*, 92 FERC ¶61,109 (2000). MidAmerican has served a copy of the compliance filing on the Indianola Waterworks and Electric Light and Power Board of Trustees, the Iowa Utilities Board, the Illinois Commerce Commission and the South Dakota Public Utilities Commission.

Comment date: September 22, 2000, in accordance with Standard Paragraph E at the end of this notice.

2. Calvert Cliffs Nuclear Power Plant, Inc.

[Docket No. ER00–2917–001]

Take notice that on September 1, 2000, Calvert Cliffs Nuclear Power Plant, Inc. tendered for filing a redesignated FERC Electric Tariff, designated in accordance with Order No. 614 and in compliance with the letter order issued in this docket on August 3, 2000.

Comment date: September 22, 2000, in accordance with Standard Paragraph E at the end of this notice.

3. Constellation Power Source Generation, Inc.

[Docket No. ER00–2918–001]

Take notice that on September 1, 2000, Constellation Power Source Generation, Inc. submitted for filing a redesignated FERC Electric Tariff, designated in accordance with Order No. 614 and in compliance with the letter order issued in this docket on July 24, 2000.

Comment date: September 22, 2000, in accordance with Standard Paragraph E at the end of this notice.

4. Constellation Power Source Generation, Inc.

[Docket Nos. ER00–3040–001; ER00–3041–001; ER00–3042–001; ER00–3043–001; ER00–3044–001; ER00–3045–001; ER00–3046–001; ER00–3047–001; ER00–3048–001; ER00–3049–001]

Take notice that on September 1, 2000, Constellation Power Source Generation, Inc., tendered for filing, in compliance with the letter orders issued by the Commission in these dockets on July 24, 2000 and August 3, 2000, redesignated and formatted rate schedules to comply with Order No. 614.

Comment date: September 22, 2000, in accordance with Standard Paragraph E at the end of this notice.

5. Duquesne Light Company

[Docket No. ER00–3580–000]

Take notice that on September 1, 2000, Duquesne Light Company (DLC), tendered for filing a Non-Firm Point-to-Point Transmission Service Agreement dated August 31, 2000 with Alliance Energy Services Partnership under DLC's Open Access Transmission Tariff (Tariff). The Service Agreement adds Alliance Energy Services Partnership as a customer under the Tariff.

DLC requests an effective date of August 31, 2000 for the Service Agreement.

Comment date: September 22, 2000, in accordance with Standard Paragraph E at the end of this notice.

6. Duquesne Light Company

[Docket No. ER00–3581–000]

Take notice that on September 1, 2000, Duquesne Light Company (DLC), tendered for filing a Firm Point-to-Point Transmission Service Agreement dated August 31, 2000 with Alliance Energy Services Partnership under DLC's Open Access Transmission Tariff (Tariff). The Service Agreement adds Alliance Energy Services Partnership as a customer under the Tariff.

DLC requests an effective date of August 31, 2000 for the Service Agreement.

Comment date: September 22, 2000, in accordance with Standard Paragraph E at the end of this notice.

7. Arizona Independent Scheduling Administrator Association

[Docket No. ER00–3583–000]

Take notice that on September 1, 2000, the Arizona Independent

Scheduling Administrator Association (Arizona ISA), tendered for filing pursuant to Section 205 of the Federal Power Act an electric tariff which describes the terms of service pursuant to which retail competition will be implemented throughout much of the State of Arizona. The tariff consists of: (1) The Protocols Manual; (2) a form agreement to be executed by the Arizona ISA and each Transmission Provider; (3) a form agreement to be executed by the Arizona ISA, each Transmission Provider and each Scheduling Coordinator active in that Transmission Provider's service territory; and (4) a rate schedule describing the way in which the Arizona ISA will recover its costs.

In addition the filing contains certificates of concurrence being submitted by Arizona Public Service Company and Tucson Electric Power Company, the two Transmission Providers in the State of Arizona that are FERC jurisdictional, and that have open access transmission tariffs on file with the Commission.

The Arizona ISA requests that the tariff become effective on November 1, 2000.

The Arizona ISA served copies of the entire filing upon the Arizona Corporation Commission, and via email sent electronic copies of the tariff and certain supporting documents upon those persons listed in the Certificate of Service submitted with the filing.

Comment date: September 22, 2000, in accordance with Standard Paragraph E at the end of this notice.

8. Tucson Electric Power Company

[Docket No. ER00–3584–000]

Take notice that on August 31, 2000, Tucson Electric Power Company tendered for filing one (1) umbrella service agreement (for short-term firm service) and one (1) service agreement (for non-firm service) pursuant to Part II of Tucson's Open Access Transmission Tariff, which was filed in Docket No. ER00–771–000.

The details of the service agreements are as follows:

(1) Umbrella Agreement for Short-Term Firm Point-to-Point Transmission Service dated as of August 16, 2000 by and between Tucson Electric Power Company and Entergy Power Marketing Corp.—FERC Electric Tariff Vol. No. 2, Service Agreement No. 126. No service has commenced at this time.

(2) Form of Service Agreement for Non-Firm Point-to Point Transmission Service dated as August 16, 2000 by and between Tucson Electric Power Company and Entergy Power Marketing Corp.—FERC Electric Tariff Vol. No. 2, Service Agreement No. 127. No service has commenced at this time.

Comment date: September 22, 2000, in accordance with Standard Paragraph E at the end of this notice.

9. Virginia Electric and Power Company

[Docket No. ER00–3585–000]

Take notice that on September 1, 2000, Virginia Electric and Power Company, doing business as Virginia Power (the Company), tendered for filing fifteen letter agreements with the Virginia Electric Municipal Association No. 1 (VMEA). The letter agreements, dated April 15, 1998, add facilities to the Agreement for the Purchase of Electricity for Resale, Rate Schedule FERC No. 109, with VMEA by establishing the terms and conditions for additional metering facilities at various delivery points of VMEA member municipalities, including the Towns of Blackstone, Culpeper, Elkton and Wakefield and the Cities of Franklin, Harrisonburg and Manassas.

Copies of the filing were served upon the VMEA, the VMEA member municipalities listed above and the Virginia State Corporation Commission.

Comment date: September 22, 2000, in accordance with Standard Paragraph E at the end of this notice.

10. NorthWestern Public Service, a division of NorthWestern Corporation

[Docket No. ER00–3587–000]

Take notice that on September 1, 2000, NorthWestern Public Service (NorthWestern), division of NorthWestern Corporation, tendered for filing revised tariff sheets, pursuant to The Commission's Order Accepting for Filing Tariff Amendments, dated August 1, 2000 (the Order) in this dockets. As directed by the Order, the revised tariff sheets state that NorthWestern's open access transmission tariff incorporates the Mid-Continent Area Power Pool's revised line loading relief procedures, as such procedures are described in the Order.

Comment date: September 22, 2000, in accordance with Standard Paragraph E at the end of this notice.

11. Allegheny Energy Service Corporation, on behalf of Monongahela Power Company, The Potomac Edison Company, and West Penn Power Company (Allegheny Power)

[Docket No. ER00–3588–000]

Take notice that on September 1, 2000, Allegheny Energy Service Corporation on behalf of Monongahela Power Company, The Potomac Edison Company, and West Penn Power Company (Allegheny Power), tendered for filing an Interconnection Agreement (Agreement) with Allegheny Energy Supply Company, LLC.

The proposed effective date under the Agreement is September 1, 2000 or a date ordered by the Commission.

Copies of the filing have been provided to the Public Utilities Commission of Ohio, the Pennsylvania Public Utility Commission, the Maryland Public Service Commission, the Virginia State Corporation Commission, and the West Virginia Public Service Commission.

Comment date: September 22, 2000, in accordance with Standard Paragraph E at the end of this notice.

12. Public Service Electric and Gas Company

[Docket No. ER00–3589–000]

Take notice that on September 1, 2000, Public Service Electric and Gas Company (PSE&G), tendered for filing a change in rate schedule to amend the Firm Capacity Agreement between PSE&G and Orange and Rockland Utilities Inc.

This amendment will become effective on November 1, 2000.

Comment date: September 22, 2000, in accordance with Standard Paragraph E at the end of this notice.

13. Alcoa Power Generating, Inc.

[Docket No. ER00–3590–000]

Take notice that on September 1, 2000, Alcoa Power Generating, Inc. (APGI), tendered for filing umbrella service agreements between: (1) APGI and Aquila Energy Marketing Corporation for Firm and Non-Firm Point-to-Point Transmission Service; and (2) APGI and The Cincinnati Gas & Electric Company, PSI Energy, Inc. (collectively Cinergy Operating Companies), and Cinergy Services, Inc., as an agent for and on behalf of the Cinergy Operating Companies (Cinergy) for Firm Point-to-Point Transmission Service, under APGI's FERC Electric Tariff Original Volume No. 3 — Open Access Transmission Tariff (OATT).

The service agreement provides for transmission service under APGI's OATT and is proposed to be effective September 1, 2000, the date of this filing.

Comment date: September 22, 2000, in accordance with Standard Paragraph E at the end of this notice.

14. New York Independent System Operator, Inc.

[Docket No. ER00–3591–000]

Take notice that on September 1, 2000, the New York Independent

System Operator, Inc., filed a combined compliance filing and report in the above-captioned proceeding. The filing includes certain proposed tariff revisions which the NYISO requests become effective on September 1, 2000.

A copy of this filing was served upon all parties in the above captioned proceedings.

Comment date: September 22, 2000, in accordance with Standard Paragraph E at the end of this notice.

15. MidAmerican Energy Company

[Dockets Nos. ER96–719–000 and ER00–2051–000]

Take notice that on August 28, 2000, MidAmerican Energy Company (MidAmerican) filed revisions to its Rate Schedule for Power Sales, FERC Electric Rate Schedule, Original Volume No. 5 (FERC Docket No. ER96–719–000; amended in FERC Docket No. ER00–2051–000).

Comment date: September 18, 2000, in accordance with Standard Paragraph E at the end of this notice.

16. Entergy Services, Inc.

[Docket Nos. ER99–231–001; ER99–232–001; and ER99–487–001]

Sam Rayburn G&T Electric Cooperative, Inc. v. Entergy Services, Inc.; Entergy Gulf States, Inc.

[Docket Nos. EL99–6–001]

Take notice that on August 31, 2000, Entergy Services, Inc. (Entergy Services), on behalf of Entergy Gulf States, Inc., tendered for filing its compliance filing in the above-captioned dockets as required by the Commission's August 21, 2000 letter order.

The compliance filing submits a clean version of the Network Integration Transmission Service Agreement and Attachment A (collectively, the NITSA) between Entergy and SRG&T that reflects the approved settlement.

Comment date: October 10, 2000, in accordance with Standard Paragraph E at the end of this notice.

Standard Paragraphs

E. Any person desiring to be heard or to protest such filing should file a motion to intervene or protest with the Federal Energy Regulatory Commission, 888 First Street, NE., Washington, DC 20426, in accordance with Rules 211 and 214 of the Commission's Rules of Practice and Procedure (18 CFR 385.211 and 385.214). All such motions or protests should be filed on or before the comment date. Protests will be considered by the Commission in determining the appropriate action to be taken, but will not serve to make protestants parties to the proceeding. Any person wishing to become a party must file a motion to intervene. Copies of these filings are on file with the Commission and are available for public inspection. This filing may also be viewed on the Internet at http://www.ferc.fed.us/ online/rims.htm (call 202–208–2222 for assistance).

Linwood A. Watson, Jr.,

Acting Secretary.

[FR Doc. 00–23591 Filed 9–13–00; 8:45 am]

BILLING CODE 6717–01–P

DEPARTMENT OF ENERGY

Federal Energy Regulatory Commission

[Docket No. EC00–63–000, et al.]

Sierra Pacific Power Company, et al.; Electric Rate and Corporate Regulation Filings

September 8, 2000.

Take notice that the following filings have been made with the Commission:

1. Sierra Pacific Power Company, Nevada Power Company and Portland General Electric Company

[Docket No. EC00-63–000]

Take notice that on August 25, 2000, Sierra Pacific Power Company (Sierra), Nevada Power Company (Nevada Power) and Portland General Electric Company (PGE) (collectively Applicants) filed additional information in support of their application for approval of their proposed merger as required by the July 26, 2000 Commission order in Sierra Pacific Power Co., Nevada Power Co., and Portland General Electric Co., Order Establishing Further Proceedings, 92 FERC ¶ 61,069 (2000).

Comment date: October 25, 2000, in accordance with Standard Paragraph E at the end of this notice.

2. American National Power, Inc.

[Docket No. EC00–133–000]

Take notice that on September 1, 2000, pursuant to Section 203 of the Federal Power Act, 16 U.S.C. § 824b (1998) and Part 33 of the Regulations of the Federal Energy Regulatory Commission (Commission), 18 CFR 33 *et seq.*, American National Power, Inc. (Applicant) filed an Application for Commission approval for the transfer of upstream ownership interests in certain subsidiaries.

Comment date: September 22, 2000, in accordance with Standard Paragraph E at the end of this notice.

3. Enron Sandhill Limited Partnership

[Docket No. EG00–253-000]

Take notice that on September 5, 2000, Enron Sandhill Limited Partnership (ESLP), a limited liability company with its principal place of business at 1400 Smith Street, Houston, Texas 77002, filed with the Federal Energy Regulatory Commission (Commission) an application for determination of exempt wholesale generator status pursuant to Part 365 of the Commission's regulations.

ESLP states that it will be engaged directly and exclusively in the business of owning a portion of a generation facility consisting of four 50 MW nameplate capacity gas turbines located in Austin, Texas. ESLP will sell its capacity exclusively at wholesale.

Comment date: September 29, 2000, in accordance with Standard Paragraph E at the end of this notice. The Commission will limit its consideration of comments to those that concern the adequacy or accuracy of the application.

4. Calcasieu Power, LLC

[Docket No. ER00–3292–001]

Take notice that on September 1, 2000, Calcasieu Power, LLC (Calcasieu) tendered for filing amendments to its proposed tariff for Emergency Redispatch Service filed with the Commission on July 28, 2000 in the above-referenced docket. The tariff sets forth the compensation for the dispatch of the Calcasieu generating facility by Entergy Services, Inc. during emergencies.

Calcasieu requests that the notice requirements set forth in Rule 35.3(a) be waived to the extent required to allow the tariff to become effective as of July 29, 2000.

Comment date: September 22, 2000, in accordance with Standard Paragraph E at the end of this notice.

5. Genesee Power Station Limited Partnership

[Docket No. QF93–19–001]

Take notice that on August 25, 2000, Genesee Power Station Limited Partnership, a Michigan limited partnership, filed with the Federal Energy Regulatory Commission an amendment to its application for certification of a facility as a qualifying small power production facility pursuant to § 292.207(b) of the Commission's regulations. No determination has been made that the submittal constitutes a complete filing.

The applicant's 38 MW facility located in Genesee Township, Michigan (Facility) was self-certified in Docket No. QF93–19–000. Certification by the

Commission is sought to confirm the QF status of the Facility in light of changes in certain upstream ownership interests. The Facility is interconnected with Consumers Energy Company, and Consumers Energy Company supplies all maintenance power to the Facility.

Comment date: September 25, 2000, in accordance with Standard Paragraph E at the end of this notice.

Standard Paragraphs

E. Any person desiring to be heard or to protest such filing should file a motion to intervene or protest with the Federal Energy Regulatory Commission, 888 First Street, N.E., Washington, D.C. 20426, in accordance with Rules 211 and 214 of the Commission's Rules of Practice and Procedure (18 CFR 385.211 and 385.214). All such motions or protests should be filed on or before the comment date. Protests will be considered by the Commission in determining the appropriate action to be taken, but will not serve to make protestants parties to the proceeding. Any person wishing to become a party must file a motion to intervene. Copies of these filings are on file with the Commission and are available for public inspection. This filing may also be viewed on the Internet at http://www.ferc.fed.us/online/rims.htm (call 202–208–2222 for assistance).

Linwood A. Watson, Jr.,

Acting Secretary.

[FR Doc. 00–23592 Filed 9–13–00; 8:45 am]

BILLING CODE 6717–01–P

DEPARTMENT OF ENERGY

Federal Energy Regulatory Commission

[Docket No. EF00–3031–000, et al.]

Southwestern Power Administration, et al.; Electric Rate and Corporate Regulation Filings

September 6, 2000.

Take notice that the following filings have been made with the Commission:

1. Southeastern Power Administration

[Docket No. EF00–3031–000]

Take notice that on August 15, 2000 Southeastern Power Administration (Southeastern) filed for information, Rate Order No. SEPA–39 by the Deputy Secretary of the Department of Energy, that confirmed and approved Rate Schedules JW–1–F and JW–2–C for power from Southeastern's Jim Woodruff System. The approval extends through September 19, 2005.

The Deputy Secretary states that the Commission, by order issued November 15, 1995, in Docket No. EF95–3031–000, confirmed and approved Rate Schedules JW–1–E and JW–2–B.

Southeastern proposes in the instant filing to replace these rate schedules.

Comment date: September 26, 2000, in accordance with Standard Paragraph E at the end of this notice.

2. Western Area Power Administration

[Docket No. EF00–5191-000]

Take notice that on August 16, 2000, Western Area Power Administration filed for information, a copy of Rate Order No. WAPA–91 which extends the existing Pacific Northwest-Pacific Southwest Intertie Project firm point-to-point transmission service rates for the 500 kV transmission system. The rates, originally set forth in Rate Order No. WAPA–71, were approved for the period beginning February 1, 1996 and ending September 30, 2000.

The Deputy Secretary of Energy, in Delegation Order No. 0204–172, which became effective November 24, 1999, extended the existing rates through December 31, 2003.

Comment date: September 26, 2000, in accordance with Standard Paragraph E at the end of this notice.

3. Downtown Cogeneration Associates Limited Partnership

[Docket No. EG00–252–000]

Take notice that on August 31, 2000, Downtown Cogeneration Associates Limited Partnership (DCALP), with its address c/o Northeast Energy Services, Inc., 111 Speen Street, Framingham, MA 01701, filed with the Federal Energy Regulatory Commission (FERC or the Commission) an application for determination of exempt wholesale generator status pursuant to part 365 of the Commission's regulations.

DCALP is a Connecticut limited partnership that is engaged directly and exclusively in the business of owning and operating an eligible facility located in Hartford, Connecticut. The eligible facility consists of an approximately 4 MW dual-fueled cogeneration facility and related interconnection facilities. The output of the eligible facility is sold at wholesale to consumers located in the United States.

Comment date: September 27, 2000, in accordance with Standard Paragraph E at the end of this notice. The Commission will limit its consideration of comments to those that concern the adequacy or accuracy of the application.

4. Western Resources, Inc.

[Docket No. ER00-3563–000]

Take notice that on August 31, 2000, Western Resources, Inc., tendered for filing notice that effective October 30, 2000, Service Agreement No. 2 under Western Resources' Inc., FERC Electric Tariff, Original Volume No. 1 is to be terminated.

Notice of the proposed cancellation has been served upon the City of Fredonia, Kansas and the Kansas Corporation Commission.

Comment date: September 21, 2000, in accordance with Standard Paragraph E at the end of this notice.

5. Potomac Electric and Power Company

[Docket No. ER00-3564–000]

Take notice that on August 31, 2000, Potomac Electric Power Company (PEPCO), tendered for filing an executed netting agreement between PEPCO and Allegheny Energy Supply Company, LLC. (the Counterparty).

A copy of the filing was served upon the Counterparty.

Comment date: September 21, 2000, in accordance with Standard Paragraph E at the end of this notice.

6. Tucson Electric Power Company

[Docket No. ER00-3565–000]

Take notice that on August 31, 2000, Tucson Electric Power Company tendered for filing one (1) umbrella service agreement (for short-term firm service) and one (1) service agreement (for non-firm service) pursuant to Part II of Tucson's Open Access Transmission Tariff, which was filed in Docket No. ER00–771–000.

The details of the service agreement is as follows:

(1) Umbrella Agreement for Short-Term Firm Point-to-Point Transmission Service dated as of August 17, 2000 by and between Tucson Electric Power Company and British Columbia Power Exchange Corporation—FERC Electric Tariff Vol. No. 2, Service Agreement No. 132. No service has commenced at this time.

(2) Form of Service Agreement for Non-Firm Point-to-Point Transmission Service dated as August 17, 2000 by and between Tucson Electric Power Company and British Columbia Power Exchange Corporation—FERC Electric Tariff Vol. No. 2, Service Agreement No. 133. No service has commenced at this time.

Comment date: September 21, 2000, in accordance with Standard Paragraph E at the end of this notice.

7. Tucson Electric Power Company

[Docket No. ER00–3566–000]

Take notice that on August 31, 2000, Tucson Electric Power Company tendered for filing one (1) umbrella service agreement (for short-term firm service) pursuant to Part II of Tucson's Open Access Transmission Tariff, which was filed in Docket No. ER00–771–000.

The details of the service agreement is as follows:

(1) Umbrella Agreement for Short-Term Firm Point-to-Point Transmission Service dated as of August 21, 2000 by and between Tucson Electric Power Company The Cincinnati Gas & Electric Company, an Ohio corporation, PSI Energy, Inc., an Indiana corporation, (collectively Cinergy Operating Companies) and Cinergy Services, Inc., a Delaware corporation, as agent for and on behalf of the Cinergy Operating Companies—FERC Electric Tariff Vol. No. 2, Service Agreement No. 136. No service has commenced at this time.

Comment date: September 21, 2000, in accordance with Standard Paragraph E at the end of this notice.

8. Pennsylvania Electric Company

[Docket No. ER00–3567–000]

Take notice that on August 31, 2000, Pennsylvania Electric Company (doing business as GPU Energy), tendered for filing a revised Attachment H–6A of the PJM Open Access Transmission Tariff, correcting a typographical error contained in Attachment H–6A as originally filed and accepted.

Comment date: September 21, 2000, in accordance with Standard Paragraph E at the end of this notice.

9. Allegheny Energy Service Corporation, on behalf of Allegheny Energy Supply Company, LLC (AE Supply)

[Docket No. ER00–3568–000]

Take notice that on August 31, 2000, Allegheny Energy Service Corporation on behalf of Allegheny Energy Supply Company, LLC (AE Supply), tendered for filing a Service Agreement with The Potomac Edison Company d/b/a Allegheny Power in order for Allegheny Power to supply service to its Potomac Edison West Virginia retail customers.

AE Supply has requested a waiver of notice to make the Service Agreement effective on August 1, 2000.

Copies of the filing have been provided to the customer and to the West Virginia Public Service Commission.

Comment date: September 21, 2000, in accordance with Standard Paragraph E at the end of this notice.

10. Tucson Electric Power Company

[Docket No. ER00–3569–000]

Take notice that on August 31, 2000, Tucson Electric Power Company (Tucson), tendered for filing four (4) umbrella service agreements (for short-term firm service) and four (4) service agreements (for non-firm service) pursuant to Part II of Tucson's Open Access Transmission Tariff, which was filed in Docket No. ER00–771–000.

The details of the service agreements are as follows:

(1) Umbrella Agreement for Short-Term Firm Point-to-Point Transmission Service dated as of August 16, 2000 by and between Tucson Electric Power Company and Constellation Power Source, Inc.—FERC Electric Tariff Vol. No. 2, Service Agreement No. 120. No service has commenced at this time.

(2) Form of Service Agreement for Non-Firm Point-to Point Transmission Service dated as of August 16, 2000 by and between Tucson Electric Power Company and Constellation Power Source, Inc.—FERC Electric Tariff Vol. No. 2, Service Agreement No. 121. No service has commenced at this time.

(3) Umbrella Agreement for Short-Term Firm Point-to-Point Transmission Service dated as of August 16, 2000 by and between Tucson Electric Power Company and PG&E Energy Trading—FERC Electric Tariff Vol. No. 2, Service Agreement No. 122. No service has commenced at this time.

(4) Form of Service Agreement for Non-Firm Point-to Point Transmission Service dated as of August 16, 2000 by and between Tucson Electric Power Company and PG&E Energy Trading—FERC Electric Tariff Vol. No. 2, Service Agreement No. 123. No service has commenced at this time.

(5) Umbrella Agreement for Short-Term Firm Point-to-Point Transmission Service dated as of August 16, 2000 by and between Tucson Electric Power Company and TransAlta Energy Marketing (U.S.) Inc.—FERC Electric Tariff Vol. No. 2, Service Agreement No. 128. No service has commenced at this time.

(6) Form of Service Agreement for Non-Firm Point-to Point Transmission Service dated as of August 16, 2000 by and between Tucson Electric Power Company and TransAlta Energy Marketing (U.S.) Inc.—FERC Electric Tariff Vol. No. 2, Service Agreement No. 129. No service has commenced at this time.

(7) Umbrella Agreement for Short-Term Firm Point-to-Point Transmission Service dated as of August 16, 2000 by and between Tucson Electric Power Company and PacifiCorp Power Marketing.—FERC Electric Tariff Vol. No. 2, Service Agreement No. 134. No service has commenced at this time.

(8) Form of Service Agreement for Non-Firm Point-to Point Transmission Service dated as of August 16, 2000 by and between Tucson Electric Power Company and PacifiCorp Power Marketing—FERC Electric Tariff Vol. No. 2, Service Agreement No. 135. No service has commenced at this time.

Comment date: September 21, 2000, in accordance with Standard Paragraph E at the end of this notice.

11. Southwest Power Pool, Inc.

[Docket No. ER00–3572–000]

Take notice that on August 31, 2000, Southwest Power Pool, Inc. (SPP), tendered for filing an executed service agreement for Firm Point-to-Point Transmission Service with the Southwestern Power Administration (Transmission Customer).

SPP seeks an effective date of September 1, 2000, for this service agreement.

Copies of this filing were served on the Transmission Customer.

Comment date: September 21, 2000, in accordance with Standard Paragraph E at the end of this notice.

12. MidAmerican Energy Company

[Docket No. ER00–3573–000]

Take notice that on August 31, 2000, MidAmerican Energy Company (MidAmerican), 666 Grand Avenue, 2900 Ruan Center, Des Moines, Iowa 50309 tendered for filing proposed changes to its Open Access Transmission Tariff (OATT). The changes are for the purpose of complying with Ordering Paragraph (B) of the Commission's August 1, 2000 Order Accepting for Filing Tariff Amendments in *Mid-Continent Area Power Pool*, 92 FERC ¶ 61,138 (2000).

MidAmerican proposes that the rate schedule changes become effective on May 1, 2000 as directed by the Commission in *Mid-Continent Area Power Pool*, 91 FERC ¶ 61,184 (2000).

The proposed rate schedule changes have been mailed to all Transmission Customers having service agreements under the OATT, the Iowa Utilities Board and the Illinois Commission, the South Dakota Public Service Commission.

Comment date: September 21, 2000, in accordance with Standard Paragraph E at the end of this notice.

13. PacifiCorp

[Docket No. ER00–3574–000]

Take notice that on August 31, 2000, PacifiCorp, tendered for filing in

accordance with 18 CFR 35 of the Commission's Rules and Regulations, a Network Integration Transmission Service Agreement with the Western Area Power Administration, Rocky Mountain Region (WAPA–RM) under PacifiCorp's FERC Electric Tariff, Second Revised Volume No. 11 (Tariff).

Copies of this filing were supplied to the Washington Utilities and Transportation Commission and the Public Utility Commission of Oregon.

Comment date: September 21, 2000, in accordance with Standard Paragraph E at the end of this notice.

14. MidAmerican Energy Company

[Docket No. ER00–3575–000]

Take notice that on August 31, 2000, MidAmerican Energy Company (MidAmerican), tendered for filing with the Commission notice of cancellation pursuant to Section 35.15 of the Commission's Regulations.

MidAmerican requests that the following rate schedule be canceled effective as of 11:59 p.m. on September 30, 2000:

1. Participation Power Interchange Service Peaking Capacity Sales Agreement dated June 6, 1991, between Iowa Public Service Company (a predecessor company of MidAmerican) and Corn Belt Power Cooperative. This Agreement has been designated as MidAmerican Rate Schedule No. 88.

MidAmerican requests a waiver of Section 35.15 to the extent that this Notice of Cancellation has not been filed within the time required by such section as no party shall be harmed or prejudiced by such delay in filing. MidAmerican inadvertently failed to submit the Notice of Cancellation 60 days prior to expiration of the agreement under its own terms.

MidAmerican has mailed a copy of this filing to Corn Belt, the Iowa Utilities Board, the Illinois Commerce Commission and the South Dakota Public Utilities commission.

Comment date: September 21, 2000, in accordance with Standard Paragraph E at the end of this notice.

15. PJM Interconnection, L.L.C.

[Docket No. ER00–3576–000]

Notice of Filing. Take notice that on August 31, 2000, PJM Interconnection, L.L.C. (PJM), tendered for filing ten executed interconnection service agreements between PJM and FPL Energy MH50, L.P., Green Knight Economic Development Corporation, PEI Power Corporation, Pennsylvania Electric Company d/b/a GPU Energy, Pennsylvania Windfarms, Inc., PPL Brunner Island, LLC, PPL Holtwood, LLC, PPL Martins Creek, LLC, PPL Montour, LLC, and Public Service Enterprise Group Incorporated.

PJM requests a waiver of the Commission's 60-day notice requirement to permit the effective dates agreed to by the parties.

Copies of this filing were served upon each of the parties to the agreements the state regulatory commissions within the PJM control area.

Comment date: September 21, 2000, in accordance with Standard Paragraph E at the end of this notice.

16. New England Power Pool

[Docket No. ER00–3577–000]

Take notice that on August 31, 2000, the New England Power Pool (NEPOOL), tendered for filing the Sixty-Fourth Agreement Amending New England Power Pool Agreement which proposes the elimination of In Service.

A November 1, 2000 effective date has been requested.

NEPOOL states that copies of these materials were sent to the New England state governors and regulatory commissions and the NEPOOL Participants.

Comment date: September 21, 2000, in accordance with Standard Paragraph E at the end of this notice.

17. Montana-Dakota Utilities Co., A Division of MDU Resources Group, Inc.

[Docket No. ER00–3578–000]

Take notice that on August 31, 2000, Montana-Dakota Utilities Co., a Division of MDU Resources Group, Inc. (Montana-Dakota), tendered for filing a letter notifying the Federal Energy Regulatory Commission that the Montana-Dakota open access transmission tariff has been modified, effective August 1, 2000, to include the revised Mid-Continent Area Power Pool (MAPP) Line Loading Relief (LLR) procedures that incorporate the North American Electric Reliability Councils transmission loading relief procedures for initial curtailments of non-firm transmission service approved in Docket No. ER99–2649–001, *et al.*

Comment date: September 21, 2000, in accordance with Standard Paragraph E at the end of this notice.

18. Ameren Services Company

[Docket No. ER00–3579–000]

Take notice that on August 31, 2000, Ameren Services Company (Ameren Services), tendered for filing a Retail Network Operating Agreement and a Service Agreement for Network Integration Transmission Service between Ameren Services and AmerenCIPS. Ameren Services asserts that the purpose of the Agreements is to permit Ameren Services to provide transmission service to AmerenCIPS pursuant to Ameren's Open Access Tariff.

Comment date: September 21, 2000, in accordance with Standard Paragraph E at the end of this notice.

19. Mid-Continent Area Power Pool

[Docket No. ER00–3598–000]

Take notice that on August 30, 2000, Northern States Power Company (Minnesota) and Northern States Power Company (Wisconsin) tendered for filing a status report in conjunction with the Commission's Order at 92 FERC ¶ 61,138 (2000).

Comment date: September 20, 2000, in accordance with Standard Paragraph E at the end of this notice.

Standard Paragraphs

E. Any person desiring to be heard or to protest such filing should file a motion to intervene or protest with the Federal Energy Regulatory Commission, 888 First Street, NE., Washington, DC 20426, in accordance with Rules 211 and 214 of the Commission's Rules of Practice and Procedure (18 CFR 385.211 and 385.214). All such motions or protests should be filed on or before the comment date. Protests will be considered by the Commission in determining the appropriate action to be taken, but will not serve to make protestants parties to the proceeding. Any person wishing to become a party must file a motion to intervene. Copies of these filings are on file with the Commission and are available for public inspection. This filing may also be viewed on the Internet at http://www.ferc.fed.us/online/rims.htm (call 202–208–2222 for assistance).

Linwood A. Watson, Jr.

Acting Secretary.

[FR Doc. 00–23593 Filed 9–13–00; 8:45 am]

BILLING CODE 6717–01–P

DEPARTMENT OF ENERGY

Federal Energy Regulatory Commission

[Project No. 10942–001]

Skykomish River Hydro Inc.; Notice of Extension of Time to File Comments on the Intent to Prepare Environmental Impact Statement

September 8, 2000.

On July 28, 2000, the Federal Energy Regulatory Commission (Commission) issued a notice of intent to prepare an environmental impact statement on the

proposed construction and operation of the Martin Creek Hydroelectric Project No. 10942–001, located on Martin and Kelley Creeks in King County, Washington. The project would be located on about 17 acres of the Mt. Baker-Snoqualmie National Forest.

Take notice that the due date for filing comments has been extended from September 26, 2000 to November 10, 2000. The extension was requested by the United States Department of Agriculture, Forest Service because area wild fires have stretched staff resources to a point that they can not effectively respond in the time period requested.

David P. Boergers,

Secretary.

[FR Doc. 00–23596 Filed 9–13–00; 8:45 am]

BILLING CODE 6717–01–M

DEPARTMENT OF ENERGY

Federal Energy Regulatory Commission

[Docket No. RM98–1–000]

Regulations Governing Off-the-Record Communications; Public Notice

September 8, 2000.

This constitutes notice, in accordance with 18 CFR 385.2201(h), of the receipt of exempt and prohibited off-the-record communications.

Order No. 607 (64 FR 51222, September 22, 1999) requires Commission decisional employees, who make or receive an exempt or a prohibited off-the-record communication relevant to the merits of a contested on-the-record proceeding, to deliver a copy of the communication, if written, or a summary of the substance of any oral communication, to the Secretary.

Prohibited communications will be included in a public, non-decisional file associated with, but not part of, the decisional record of the proceeding. Unless the Commission determines that the prohibited communication and any responses thereto should become part of the decisional record, the prohibited off-the-record communication will not be considered by the Commission in reaching its decision. Parties to a proceeding may seek the opportunity to respond to any facts or contentions made in a prohibited off-the-record communication, and may request that the Commission place the prohibited communication and responses thereto in the decisional record. The Commission will grant such requests only when it determines that fairness so requires.

Exempt off-the-record communications will be included in the decisional record of the proceeding, unless the communication was with a cooperating agency as described by 40 CFR 1501.6, made under 18 CFR 385.2201(e)(1)(v).

The following is a list of exempt and prohibited off-the-record communications received in the Office of the Secretary within the preceding 14 days. The documents may be viewed on the Internet at http://www.ferc.fed.us/online/rims.htm (call 202–208–2222 for assistance).

Exempt

1. CP00–114–000—9–5–00—Dorothy Watson
2. CP00–114–000—9–5–00—Charles and Debbie Hartwell
3. CP00–114–000—9–5–00—George Davis
4. CP00–114–000—8–25–00—Todd Mattson
5. Project No. 1962–000—8–23–00—Sally Yost
6. Project No. 1962–000—8–17–00—Lorena Gorbet
7. Project No. 1962–000—8–18–00—Keith McKinley
8. CP00–65–000—8–27–00—Richard Palmieri
9. CP98–150–000—8–24–00—Carol E. Murphy
10. CP98–150–000—8–30–00—Matthew J. Brower
11. CP00–6–00—9–7–00—Jeff Shenot, FERC
12. CP00–6–000—9–7–00—Jeff Shenot, FERC

David P. Boergers,

Secretary.

[FR Doc. 00–23594 Filed 9–13–00; 8:45 am]

BILLING CODE 6717–01–M

ENVIRONMENTAL PROTECTION AGENCY

[FRL–6868–4]

Agency Information Collection Activities: Proposed Collection; Comment Request; Aquatic Animal Production Industry Survey

AGENCY: Environmental Protection Agency (EPA).

ACTION: Notice.

SUMMARY: In compliance with the Paperwork Reduction Act (44 U.S.C. 3501 *et seq.*), this document announces that EPA is planning to submit the following proposed Information Collection Request (ICR) to the Office of Management and Budget (OMB): Aquatic Animal Production Industry Survey (EPA ICR No. 1988.01). Before submitting the ICR to OMB for review and approval, EPA is soliciting comments on specific aspects of the proposed information collection as described below.

DATES: Comments must be submitted on or before November 13, 2000.

ADDRESSES: Comments may be mailed to Ms. Marta Jordan, U.S. EPA (4303) 1200 Pennsylvania Ave., NW., Washington, DC 20460. Comments may also be submitted electronically to *jordan.marta@epa.gov.*

FOR FURTHER INFORMATION CONTACT: To request a copy of the ICR, including a draft of the survey, contact Ms. Marta Jordan at (202) 260–0817.

SUPPLEMENTARY INFORMATION: *Affected Entities:* Entities potentially affected by this action include operators of aquatic animal production facilities within or that discharge to waters of the United States. The survey is intended to identify and collect data from aquatic animal production facilities that generate and discharge process wastewater associated with industrial activities. Aquatic animal production facilities (*e.g.,* fish hatcheries or fish farms) are privately or publicly owned facilities that contain, grow or hold aquatic animals.

Title: Aquatic Animal Production Industry Survey (EPA ICR No. 1988.01).

Abstract: EPA is planning to survey aquatic animal production facilities to collect the technical and economic information EPA will need to develop effluent limitations guidelines and standards. Currently, no nationally applicable effluent limitations guidelines and standards exist to regulate discharges from facilities in this industry. EPA will develop effluent regulations for this industry due, in part, to the widespread concern about excess nutrients and other chemicals entering the Nation's waters from animal production and feeding operations (both aquatic and land based).

EPA is required by section 304(m) of the Clean Water Act, 33 U.S.C. 1314(m), to identify categories of sources that discharge pollutants and to establish a schedule for establishing effluent limitations guidelines for these categories. EPA is also required by the terms of a Consent Decree with the Natural Resources Defense Council, Inc. (NRDC) to develop effluent limitations guidelines and standards for the aquatic animal production industry. *NRDC* v *EPA,* (D.D.C. Civ. No. 89–2980, January 31, 1992, as modified). EPA is conducting the survey to collect the information EPA needs to respond to

these legislative and judicial requirements.

EPA would issue this survey instrument under authority of section 308 of the Clean Water Act, 33 U.S.C. 1318. Responses from survey recipients will be mandatory. EPA would mail the survey instrument to aquatic animal producers after OMB approves the ICR. The ICR submitted by EPA to OMB will include discussion of the comments received in response to today's notice. An agency may not conduct or sponsor, and a person is not required to respond to, a collection of information unless it displays a currently valid OMB control number. The OMB control numbers for EPA's regulations are listed in 40 CFR Part 9 and 48 CFR Chapter 15.

The proposed survey instrument is an important part of the effluent limitations guidelines development process. The proposed survey instrument will provide EPA with the technical and economic data necessary to evaluate effective pollution control technologies and the economic achievability of any final rule applicable to aquatic animal production facility discharges. Burden reduction suggestions should be mindful of EPA's need to collect information on the pollutants discharged by aquatic animal production facilities, the processes that generate pollutants, alternative controls, the economic achievability of proposed regulations, and the benefits derived from reducing pollution in our oceans, lakes, rivers, and streams. EPA will consider characteristics of the wastewater discharges, performance of the control technologies, including management practices and the affordability (economic achievability) by different segments (or subcategories) when making final decisions on requirements for controlling the discharges from the industry.

Regulations governing the confidentiality of business information are contained in the Code of Federal Regulations (CFR) at Title 40 Part 2, Subpart B. A survey respondent may submit a business confidentiality claim covering part or all of the response to this survey, other than effluent data, as described in 40 CFR 2.203 (b):

(b) Method and time of asserting business confidentiality claim. A business which is submitting information to EPA may assert a business confidentiality claim covering the information by placing on (or attaching to) the information, at the time it is submitted to EPA, a cover sheet, stamped or typed legend, or other suitable form or company confidential. Allegedly, confidential portions of otherwise nonconfidential documents should be clearly identified by the business, and may be submitted separately to facilitate identification and handling by EPA. If the business desires confidential treatment only until a certain date or until the occurrence of a certain event, the notice should so state.

If no business confidentiality claim accompanies the information when it is received by EPA, EPA may make the information available to the public without further notice.

EPA developed the proposed survey instrument in a manner designed to reduce burden and improve clarity. EPA believes that the facilities potentially affected by this regulation can be adequately characterized by sending the survey to only a portion of facilities in the industry. EPA estimates mailing surveys to less than 500 facilities and would include facilities varying in size and ownership characteristics, (although this number may change before the survey is mailed as EPA refines its methodology for determining the portion of facilities, by segment of industry, to receive the survey). EPA distributed the draft survey in advance of this notice to the Joint Subcommittee on Aquaculture, Aquaculture Effluents Task Force (JSA/AETF), which includes representatives from industry trade associations, academia, and other interested stakeholders. EPA also conducted two conference calls with one of the major technical subgroups (economic technical subgroup) of the JSA/AETF to discuss the economic questions in the survey. To the extent possible, EPA incorporated comments and suggestions from these initial reviews into the current draft of the survey instrument. Finally, once EPA mails the survey instrument, EPA intends to maintain a temporary, toll-free number that survey recipients may call to obtain assistance in completing the survey. EPA believes that the toll-free telephone number should greatly reduce burden by helping recipients to answer specific questions within the context of their individual operations.

The survey instrument will provide information to characterize current conditions in the aquatic animal production industry, which has grown and changed since 1977, when EPA proposed, but did not adopt, effluent limitations guidelines and standards for fish hatcheries and farms (which are included in the broader category of aquatic animal production facilities). EPA intends to supplement the survey responses with publicly available data, such as Dun and Bradstreet records and NPDES permitted facility data (Discharge Monitoring Reports). EPA also plans to use information from the 1998 USDA Aquaculture Census, to the extent possible.

The EPA would like to solicit comments to:

(i) Evaluate whether the proposed collection of information is necessary for the proper performance of the functions of the Agency, including whether the information will have practical utility;

(ii) Evaluate the accuracy of the Agency's estimate of the burden of the proposed collection of information, including the validity of the methodology and assumptions used;

(iii) Enhance the quality, utility, and clarity of the information to be collected; and

(iv) Minimize the burden of the collection of information on those who are to respond, including the use of appropriate automated electronic, mechanical, or other information collection techniques, *e.g.,* permitting electronic submission of responses.

Burden Statement: Burden means the total time, effort, or financial resources expended by persons to generate, maintain, retain, or disclose or provide information to or for a federal agency. Burden includes the time needed to review instructions; develop, acquire, install, and utilize technology and systems for the purposes of collecting, validating, and verifying information, processing and maintaining information, and disclosing and providing information; to adjust the existing ways to comply with any previously applicable instructions and requirements; to train personnel to be able to respond to a collection of information; to search data sources; to complete and review the collection of information; and to transmit or otherwise disclose the information.

The EPA burden estimate on facilities is based on an estimated 500 facilities completing the survey. EPA estimates that the total cost burden will be approximately $352,250 and the hour burden will be 15,500 hours, as described in more detail in the tables below.

RESPONDENT AVERAGE BURDEN PER SURVEY RESPONSE ACTIVITY

Respondent activity	Total burden per activity (hours)
Read Instructions	5
Gather Information/Data	11
Complete Survey Form	8
Review Survey Responses	7
All Activities	31

COLLECTION OF AQUATIC ANIMAL PRODUCTION FACILITIES DATA, TOTAL RESPONDENT BURDEN AND COSTS

Total number of responses	Average burden per burden respondent (in hours)	Totabl burden (in hours)	Average labor costs per respondent (in dollars)	Total labor costs (in dollars)	Average O&M costs per respondent (in dollars)	Total O&M costs (in dollars)	Total costs (in dollars)
500	31	15,500	$694	$347,000	$10.50	$5,250	$352,250

In addition, EPA solicits comments and suggestions regarding the substance and form of the draft survey instrument. For example, EPA solicts comment on whether the directions and questions are clear and concise; whether the definitions are consistent with the industry's use of terms; whether the right questions are contained in the survey (if not, please suggest more appropriate ones); whether the questions adequately cover all pertinent factors relevant to developing equitable guidelines (if not, what needs to be added?). EPA is also soliciting survey instrument. For example, EPA solicits comment on whether the directions and questions are clear and concise; whether the definitions are consistent with the industry's use of terms; whether the right questions are contained in the survey (if not, please suggest more appropriate ones); whether the questions adequately cover all pertinent factors relevant to developing equitable guidelines (if not, what needs to be added?) EPA is also soliciting comments on means of reducing the data collection burden.

Dated: August 31, 2000.

Geoffrey H. Grubbs,

Director, Office of Science and Technology.

[FR Doc. 00–23650 Filed 9–13–00; 8:45 am]

BILLING CODE 6560–50–P

ENVIRONMENTAL PROTECTION AGENCY

[FRL–6869–6]

Proposed Settlement Agreement

AGENCY: Environmental Protection Agency (EPA).

ACTION: Notice of proposed settlement agreement; request for public comment.

SUMMARY: In accordance with section 113(g) of the Clean Air Act, as amended, 42 U.S.C. 7413(g), notice is hereby given of a proposed settlement agreement in *American Foundrymen's Society, et al.* v. *EPA,* Civ. No. 00–1208 (D.C. Cir.), a case filed by the American Foundrymen's Society, the North American Die Casting Association, and the Non-Ferrous Founders' Society (''Petitioners''). This case concerns the National Emission Standard for Hazardous Air Pollutants for Secondary Aluminum Production (65 FR 15690, March 23, 2000). The proposed settlement agreement was lodged with the United States Court of Appeals for the District of Columbia Circuit on July 31, 2000.

DATES: Written comments on the proposed settlement agreement must be received by October 16, 2000.

ADDRESSES: Written comments should be sent to Timothy D. Backstrom, Air and Radiation Law Office (2344A), Office of General Counsel, U.S. Environmental Protection Agency, 1200 Pennsylvania Avenue, NW, Washington, DC 20460. Copies of the proposed settlement agreement are available from Phyllis J. Cochran, (202) 564–7606. A copy of the proposed settlement agreement was also lodged with the Clerk of the United States Court of Appeals for the District of Columbia Circuit on July 31, 2000.

FOR FURTHER INFORMATION CONTACT: On March 23, 2000, EPA published a final National Emission Standard for Hazardous Air Pollutants (''NESHAP'') for Secondary Aluminum Production establishing Maximum Achievable Control Technology (''MACT'') requirements for this source category. (40 part 63, subpart RRR, 65 FR 15690) As promulgated, this standard applies to certain major and area source aluminum foundries and aluminum die casting facilities. However, in the preamble to the final rule, we stated our intention to remove aluminum foundries and aluminum die casters from subpart RRR and to develop alternate MACT requirements for these sources. We intend to collect further information from all such facilities using our authority under CAA section 114, 42 U.S.C. 7414, and to make a new determination concerning the MACT floor and MACT requirements for these facilities based on this information. We are preparing an Advance Notice of Proposed Rulemaking (''ANPR'') announcing our intention to develop alternate MACT requirements for aluminum foundries and die casters, and a Proposed Rule to stay the effectiveness of Subpart RRR as applied to aluminum foundries and die casters during the pendency of the MACT rulemaking.

On May 16, 2000, the Petitioners filed a petition in the D.C. Circuit Court of Appeals for judicial review of the Secondary Aluminum NESHAP, which was docketed as *American Foundrymen's Society et al.* v. *EPA,* Civ. No. 00–1208. However, the parties in that action are in agreement that the issuance of a proposed rule to adopt alternate MACT requirements for aluminum foundries and die casters and a final rule to stay Subpart RRR as applied to these facilities should make the present petition for review moot and result in voluntary dismissal of the petition. Accordingly, the parties negotiated a settlement agreement describing the elements of this process,

and have jointly moved the Court to hold the case in abeyance while the agreement is finalized and implemented.

The proposed settlement agreement provides that EPA will issue an ANPR announcing our intention to remove aluminum foundries and die casters from subpart RRR and to propose alternative MACT requirements for aluminum foundries and die casters, and a Proposed Rule to stay subpart RRR with respect to such sources, within six weeks. The agreement also provides that we will issue a Proposed Rule to remove aluminum foundries and die casters from subpart RRR and to adopt alternate MACT requirements for aluminum foundries and die casters, and will take final action concerning the proposed stay of subpart RRR with respect to such sources, within two years.

The agreement also allows individual foundries or die casters who are subject to subpart RRR to satisfy their Initial Notification requirements under 40 CFR 63.9 by timely submission of a portion of a complete response to the Information Collection Request (''ICR'') that we will be issuing to all aluminum foundries and die casters pursuant to CAA section 114. In the agreement, the Petitioners agree to use their best efforts to facilitate issuance of the ICR and the timely submission of responses to it by the facilities that receive it. The Petitioners also agree to cooperate with us to identify appropriate facilities at which emission testing will be conducted.

For a period of thirty (30) days following the date of publication of this notice, EPA will receive written comments relating to the proposed settlement agreement from persons who were not named as parties or interveners to the litigation in question. EPA or the Department of Justice may withdraw or withhold consent to the proposed consent decree if the comments disclose facts or considerations that indicate that such consent is inappropriate, improper, inadequate, or inconsistent with the requirements of the Act. Unless EPA or the Department of Justice determine, following the comment period, that consent is inappropriate, the settlement agreement will then be executed by the parties.

Dated: August 31, 2000.

Anna L. Wolgast,

Acting for General Counsel.

[FR Doc. 00–23649 Filed 9–13–00; 8:45 am]

BILLING CODE 6560–50–M

ENVIRONMENTAL PROTECTION AGENCY

[FRL–6868–5]

Notice of Meeting of the EPA's Children's Health Protection Advisory Committee (CHPAC)

AGENCY: Environmental Protection Agency (EPA).

ACTION: Notice of meeting.

SUMMARY: Pursuant to the provisions of the Federal Advisory Committee Act, Public Law 92–463, notice is hereby given that the next meeting of the Children's Health Protection Advisory Committee (CHPAC) will be held September 26–28, 2000 at the Holiday Inn, Silver Spring, MD. The CHPAC was created to advise the Environmental Protection Agency in the development of regulations, guidance and policies to address children's environmental health.

DATES: Tuesday, September 26, 2000 Work Group meetings only; plenary sessions Wednesday, September 27, 2000 and Thursday, September 28, 2000.

ADDRESSES: Holiday Inn Silver Spring, 8777 Georgia Avenue, Silver Spring, MD 20910–3703.

Agenda Items: The meetings of the CHPAC are open to the public. The Science and Research Work Group will meet from 9:30 a.m. to 5:00 p.m. and the 21st Century Work Group as well as the Data Needs Work Group will meet from 1:00 p.m. to 5:00 p.m. on Tuesday, September 26, 2000. The plenary CHPAC will meet on Wednesday, September 27, 2000 from 9:00 a.m. to 5:00 p.m. with a public comment period at 4:45 p.m. and on Thursday, September 28, 2000 from 9:00 a.m. to 4:30 p.m.

The plenary session will open with introductions and a review of the agenda and objectives for the meeting. Agenda items include highlights of the Office of Children's Health Protection (OCHP) activities and reports from the Work Groups.

FOR FURTHER INFORMATION CONTACT: Contact Paula R. Goode, Office of Children's Health Protection, USEPA, MC 1107, 401 M Street, SW, Washington, DC 20460, (202) 260–7778, goode.paula@epa.gov.

Dated: September 6, 2000.

Paula R. Goode,

Designated Federal Officer, Children's Health Protection Advisory Committee.

[FR Doc. 00–23648 Filed 9–13–00; 8:45 am]

BILLING CODE 6560–50–M

ENVIRONMENTAL PROTECTION AGENCY

[FRL–6869–1]

Meeting of the Small Community Advisory Subcommittee

AGENCY: Environmental Protection Agency (EPA).

ACTION: Notice.

SUMMARY: The Small Community Advisory Subcommittee will meet on September 28–29, 2000, in Lincoln, NE.

The Small Community Advisory Subcommittee was established by the U.S. Environmental Protection Agency as a standing subcommittee of the Local Government Advisory Committee. The September meeting will focus on State—EPA relations as they are related to small communities and the federal regulatory process.

The Committee will hear comments from the public between 9:00 a.m. and 9:15 a.m. on September 28, 2000. Each individual or organization wishing to address the Committee will be allowed a minimum of three minutes. Please contact the Designated Federal Officer (DFO) at the number listed below to schedule agenda time. Time will be allotted on a first come, first serve basis.

This is an open meeting and all interested persons are invited to attend. Meeting minutes will be available after the meeting and can be obtained by written request from the DFO. Members of the public are requested to call the DFO at the number listed below if planning to attend so that arrangements can be made to comfortably accommodate attendees as much as possible. However, seating will be on a first come, first serve basis.

DATES: The meeting will begin at 9:00 a.m. on Thursday, September 28th and conclude at 5:00 p.m. on the 29th.

ADDRESSES: The meetings will be held at the Cornhusker Hotel located at 333 South 13th Street, Lincoln, NE.

Requests for Minutes and other information can be obtained by writing the DFO at 1200 Pennsylvania Ave., NW (1306A), Washington, DC 20460.

FOR FURTHER INFORMATION CONTACT: The DFO for this Subcommittee is Steven Wilson. He is the point of contact for information concerning any Subcommittee matters and can be reached by calling (202) 564–3646.

Steven Wilson,

Designated Federal Officer, Small Community Advisory Subcommittee.

[FR Doc. 00–23654 Filed 9–13–00; 8:45 am]

BILLING CODE 6560–50–P

ENVIRONMENTAL PROTECTION AGENCY

[FRL–6868–7]

Proposed Administrative Cost Recovery Settlement Under Section 122(i) of the Comprehensive Environmental Response, Compensation and Liability Act, as Amended (CERCLA), Hastings Ground Water Contamination Site, FAR–MAR–CO Subsite

AGENCY: Environmental Protection Agency.

ACTION: Notice; request for public comment.

SUMMARY: In accordance with Section 122(i) of the Comprehensive Environmental Response, Compensation, and Liability Act, as amended (''CERCLA''), 42 U.S.C. 9266(i), notice is hereby given of a proposed administrative settlement for recovery of past response costs concerning the Hastings Ground Water Contamination Site—FAR–MAR–CO Subsite in and around Hastings, Nebraska with the following settling party: Morrison Enterprises. The settlement requires the settling party to pay $603,292 to the Hazardous Substance Superfund. The settlement includes a covenant not to sue the settling party pursuant to Section 107(a) of CERCLA, 42 U.S.C. 9607(a). For thirty (30) days following the date of publication of this notice, the Agency will receive written comments relating to the settlement. The Agency will consider all comments and may modify or withdraw its consent to the settlement if comments received disclose facts or considerations which indicate that the settlement is inappropriate, improper, or inadequate. The Agency's response to any comments received will be available for public inspection at the Hastings Public Library, 517 W. Fourth Street, Hastings, Nebraska and 901 N. 5th Street, Kansas City, Kansas, Docket No. CERCLA–7–2000–0027.

DATES: Comments must be submitted on or before October 16, 2000.

ADDRESSES: The proposed settlement is available for public inspection at 901 N. 5th Street, Kansas City, Kansas. A copy of the proposed settlement may be obtained from the Regional Hearing Clerk, 901 N. 5th Street, Kansas City, Kansas, (913) 551–7567. Comments should reference the Hastings Ground Water Contamination Site, FAR–MAR–CO Subsite and EPA Docket No. CERCLA–7–2000–0027 and should be addressed to Audrey Asher, Senior Assistant Regional Counsel, 901 N. 5th Street, Kansas City, Kansas 66101.

FOR FURTHER INFORMATION CONTACT: Audrey Asher at (913) 551–7255.

Dated: August 25, 2000.

William Rice,

Acting Regional Administrator, United States Environmental Protection Agency, Region VII.

[FR Doc. 00–23647 Filed 9–13–00; 8:45 am]

BILLING CODE 6560–50–M

ENVIRONMENTAL PROTECTION AGENCY

[FRL–6866–9]

Proposed CERCLA Prospective Purchaser Agreement for the Pullman/Liquid Dynamics Site

AGENCY: Environmental Protection Agency (EPA).

ACTION: Proposal of CERCLA prospective purchaser agreement for the Pullman/Liquid Dynamics Site.

SUMMARY: In accordance with the Comprehensive Environmental Response, Compensation, and Liability Act of 1980 (''CERCLA''), 42 U.S.C. 9601 *et seq.*, as amended by the Superfund Amendments and Reauthorization Act of 1986 (''SARA''), Public Law 99–499, notice is hereby given that a proposed prospective purchaser agreement (''PPA'') for the Pullman/Liquid Dynamics Site (''Site'') located on the South Side of Chicago, has been executed by the Salem Baptist Church (''Church''). The proposed PPA has been submitted to the Attorney General for approval. The proposed PPA would resolve certain potential claims of the United States under sections 106 and 107 of CERCLA, 42 U.S.C. 9606 and 9607, against the Church. Under the terms of the PPA, the Church would agree to purchase, remediate and redevelop a substantial portion of the Site in return for a covenant not to sue for past response costs under CERCLA and a release from future liability for existing contamination. The Site is not on the NPL. No further response activities at the Site are anticipated at this time.

DATES: Comments on the proposed PPA must be received by U.S. EPA on or before October 16, 2000.

ADDRESSES: A copy of the proposed PPA is available for review at U.S. EPA, Region 5, 77 West Jackson Boulevard, Chicago, Illinois 60604. Please contact Reginald A. Pallesen at (312) 886–0555, prior to visiting the Region 5 office. Comments on the proposed PPA should be addressed to Reginald A. Pallesen, Office of Regional Counsel (C–14J), U.S. EPA, Region 5, 77 West Jackson Boulevard, Chicago, Illinois 60604.

FOR FURTHER INFORMATION CONTACT: Reginald A. Pallesen, Associate Regional Counsel, at (312) 886–0555. A 30-day period, commencing on the date of publication of this notice, is open for comments on the proposed PPA. Comments should be sent to the addressee identified in this notice.

William E. Muno,

Director, Superfund Division, U.S. Environmental Protection Agency, Region 5.

[FR Doc. 00–23652 Filed 9–13–00; 8:45 am]

BILLING CODE 6560–50–P

FEDERAL EMERGENCY MANAGEMENT AGENCY

Compendium of Flood Map Changes

AGENCY: Federal Emergency Management Agency (FEMA).

ACTION: Notice.

SUMMARY: This Notice provides listings of changes made to National Flood Insurance Program (NFIP) maps produced by FEMA effective during the first 6 months of 2000.

DATES: The listings include changes to NFIP maps that became effective January 1, 2000, through June 30, 2000.

FOR FURTHER INFORMATION CONTACT: Michael K. Buckley, P.E., Director, Technical Services Division, Mitigation Directorate, Federal Emergency Management Agency, Washington, DC 20472, (202)646-2756.

SUPPLEMENTARY INFORMATION: In accordance with Section 1360(i) of the National Flood Insurance Reform Act of 1994, this Notice is provided to inform interested parties of changes made by FEMA to NFIP maps. The two listings provided show communities affected by map changes made by letter and communities affected by physical map changes. For each Letter of Map Change, the first listing provides the map panel(s) affected, effective (determination) date of the change, case number, and determination type. For each physical map change, the Map Revision listing provides the map panel(s) affected and the effective date of the change. The listing also identifies: (1) those panels on which the Special Flood Hazard Areas have not been changed or have been changed only to incorporate the Letters of Map Change issued before the effective date; and (2) those panels for which a Flood Insurance Rate Map is produced for the first time, resulting only in changes to flood insurance and floodplain management requirements in the

affected community. Future notices of changes to NFIP maps will be published approximately every 6 months.

Dated: September 5, 2000.

Michael J. Armstrong,

Associate Director for Mitigation.

Two listings are provided below. The first listing includes all Letters of Map Change issued by FEMA from January 1 through June 30, 2000. The following types of letters are included in the listing:

Type	Description
01	Letter of Map Revision Based on Fill (218-65)
02	Letter of Map Amendment (218-70)
05	Letter of Map Revision With Base Flood Elevation Changes
06	Letter of Map Revision Without Base Flood Elevation Changes
08	Denial
12	Floodway Revision
17	Letter of Map Revision-inadvertent inclusion in floodway (218-65)
18	Letter of Map Revision-inadvertent inclusion in V zone (218-65)
19	Letter of Map Change Revalidation.

The second listing includes map panels that FEMA physically revised and republished from January 1 through June 30, 2000. For those map panels on which the Special Flood Hazard Areas have not been changed or have been changed only to incorporate Letters of Map Change issued before the effective date, two asterisks(**) are shown to the right of the map panel number. For those map panels for which a Flood Insurance Rate Map is produced for the first time, resulting only in changes to flood insurance and floodplain management requirements in the affected community, three asterisks(***) are shown to the right of the map panel number.

Region	State	Community	Map panel	Determination date	Case No.	Type
01	CT	BERLIN, TOWN OF	0900220010D	22-FEB-2000	00-01-0292A	02
01	CT	BETHEL, TOWN OF	0900010010B	31-MAR-2000	00-01-0602A	02
01	CT	CHESHIRE, TOWN OF	0900740005C	05-JAN-2000	99-01-1310A	02
01	CT	ELLINGTON, TOWN OF	0901580005C	08-FEB-2000	99-01-1266A	02
01	CT	FAIRFIELD, TOWN OF	0900070006C	10-MAR-2000	00-01-0496A	17
01	CT	FAIRFIELD, TOWN OF	0900070010C	28-JAN-2000	00-01-0060A	02
01	CT	GREENWICH, TOWN OF	0900080018C	14-JAN-2000	99-01-960A	02
01	CT	GROTON, TOWN OF	0900970006E	16-MAR-2000	00-01-0520A	02
01	CT	GROTON, TOWN OF	0900970006E	18-APR-2000	99-01-1248A	02
01	CT	GUILFORD, TOWN OF	0900770005B	02-MAY-2000	00-01-0312A	02
01	CT	GUILFORD, TOWN OF	0900770010B	25-APR-2000	00-01-0532A	02
01	CT	GUILFORD, TOWN OF	0900770015B	24-FEB-2000	00-01-0302A	02
01	CT	GUILFORD, TOWN OF	0900770017B	25-APR-2000	00-01-0558A	02
01	CT	LYME, TOWN OF	0901270002A	03-JAN-2000	99-01-1268A	02
01	CT	MANCHESTER, TOWN OF	0900310003E	29-MAR-2000	00-01-0582A	01
01	CT	MIDDLEFIELD, TOWN OF	0900670004B	11-APR-2000	00-01-0378A	02
01	CT	MIDDLETOWN, CITY OF	0900680009B	02-MAY-2000	00-01-0332A	01
01	CT	MILFORD, CITY OF	0900820005F	14-MAR-2000	00-01-0374A	02
01	CT	NEW FAIRFIELD, TOWN OF	0901880005A	15-MAR-2000	99-01-1316A	02
01	CT	NEW HAVEN, CITY OF	0900840004C	12-APR-2000	00-01-0188A	02
01	CT	NEWINGTON, TOWN OF	0900330005B	11-FEB-2000	00-01-0160A	01
01	CT	NEWINGTON, TOWN OF	0900330005B	28-JAN-2000	00-01-0222A	02
01	CT	NORTH HAVEN, TOWN OF	0900860005B	02-MAY-2000	00-01-0630A	02
01	CT	NORWALK, CITY OF	0900120007C	22-MAR-2000	00-01-0364A	01
01	CT	ORANGE, TOWN OF	0900870007B	07-JAN-2000	00-01-0166A	02
01	CT	OXFORD, TOWN OF	0901500016C	02-MAY-2000	00-01-0262A	02
01	CT	PLAINVILLE, TOWN OF	0900340005C	22-FEB-2000	99-01-1296A	02
01	CT	RIDGEFIELD, TOWN OF	0900130003C	17-FEB-2000	00-01-0142A	02
01	CT	SIMSBURY, TOWN OF	0900350005C	15-MAR-2000	99-01-1274A	02
01	CT	STAMFORD, CITY OF	0900150001C	25-FEB-2000	00-01-0346A	02
01	CT	STAMFORD, CITY OF	0900150005C	18-APR-2000	98-01-051P	05
01	CT	STRATFORD, TOWN OF	0900160003D	04-APR-2000	00-01-0550A	17
01	CT	WESTPORT, TOWN OF	0900190003C	19-JAN-2000	00-01-0240A	02
01	CT	WESTPORT, TOWN OF	0900190003C	28-JAN-2000	00-01-0290A	02
01	CT	WETHERSFIELD, TOWN OF	0900400002B	24-FEB-2000	00-01-0392A	02
01	MA	AGAWAM, TOWN OF	2501330002A	02-MAY-2000	00-01-0536A	02
01	MA	AGAWAM, TOWN OF	2501330002A	11-FEB-2000	00-01-0232A	02
01	MA	ASHBURNHAM, TOWN OF	2502900010B	03-MAR-2000	00-01-0506A	02
01	MA	BARNSTABLE, TOWN OF	2500010016D	28-MAR-2000	00-01-0306A	02
01	MA	BELLINGHAM, TOWN OF	2502320007B	09-FEB-2000	00-01-0426A	02
01	MA	BOURNE, TOWN OF	2552100005E	02-MAR-2000	00-01-0208A	02
01	MA	BOURNE, TOWN OF	2552100005E	28-JAN-2000	00-01-0252A	02
01	MA	BOURNE, TOWN OF	2552100010F	30-MAY-2000	00-01-0298A	02
01	MA	BOURNE, TOWN OF	2552100011F	16-MAY-2000	00-01-0336A	02
01	MA	BOXBOROUGH, TOWN OF	2501840002C	09-FEB-2000	00-01-0330A	02
01	MA	BOXBOROUGH, TOWN OF	2501840003C	11-MAY-2000	00-01-0280A	02
01	MA	BOXBOROUGH, TOWN OF	2501840003C	13-APR-2000	00-01-0464A	02
01	MA	BOXBOROUGH, TOWN OF	2501840004C	21-MAR-2000	00-01-0278A	02
01	MA	DEDHAM, TOWN OF	2502370005C	17-FEB-2000	00-01-0348A	02
01	MA	EASTON, TOWN OF	2500530010D	26-APR-2000	99-01-1086A	02
01	MA	FALMOUTH, TOWN OF	2552110001G	11-FEB-2000	00-01-0424A	02
01	MA	FRAMINGHAM, TOWN OF	2501930011B	21-MAR-2000	00-01-0398A	02

Region	State	Community	Map panel	Determination date	Case No.	Type
01	MA	HAMILTON, TOWN OF	2500840004A	28-MAR-2000	00-01-0130A	02
01	MA	LANCASTER, TOWN OF	2503120001B	11-FEB-2000	00-01-0226A	02
01	MA	LEXINGTON, TOWN OF	2501980005C	02-MAY-2000	00-01-0294A	02
01	MA	MATTAPOISETT, TOWN OF	2552140009E	02-MAR-2000	00-01-0422A	02
01	MA	MATTAPOISETT, TOWN OF	2552140009E	07-MAR-2000	00-01-0420A	02
01	MA	MATTAPOISETT, TOWN OF	2552140010G	10-FEB-2000	00-01-0260A	02
01	MA	MATTAPOISETT, TOWN OF	2552140015E	21-JAN-2000	99-01-1148A	02
01	MA	MELROSE , CITY OF	2502060001B	02-MAY-2000	00-01-0568A	02
01	MA	METHUEN, TOWN OF	2500930005C	17-MAR-2000	00-01-0194A	02
01	MA	MILLBURY, TOWN OF	2503180001C	25-APR-2000	00-01-0534A	02
01	MA	NAHANT, TOWN OF	2500950004B	02-MAY-2000	00-01-0604A	02
01	MA	NEWTON, CITY OF	2502080004D	02-MAY-2000	00-01-0372A	02
01	MA	NORTH ANDOVER, TOWN OF	2500980003C	19-JAN-2000	99-01-1224A	02
01	MA	NORTON, TOWN OF	2500600002C	14-JAN-2000	00-01-0154A	02
01	MA	PITTSFIELD, CITY OF	2500370015D	29-FEB-2000	00-01-0268A	02
01	MA	SOUTHWICK, TOWN OF	2501490015B	11-MAY-2000	00-01-0432A	02
01	MA	TAUNTON, CITY OF	2500660008C	04-MAY-2000	00-01-0696X	02
01	MA	TAUNTON, CITY OF	2500660008C	28-MAR-2000	00-01-0428A	02
01	MA	WAREHAM, TOWN OF	2552230008C	25-APR-2000	00-01-0144A	02
01	MA	WAREHAM, TOWN OF	2552230016C	29-FEB-2000	00-01-0408A	02
01	MA	WESTWOOD, TOWN OF	2552250005C	26-MAY-2000	00-01-0270A	02
01	MA	WESTWOOD, TOWN OF	2552250005C	30-MAY-2000	00-01-0254A	02
01	MA	WILMINGTON, TOWN OF	2502270002C	06-APR-2000	00-01-0248A	02
01	MA	WILMINGTON, TOWN OF	2502270003C	22-MAR-2000	00-01-0472A	02
01	MA	WILMINGTON, TOWN OF	2502270004C	07-MAR-2000	00-01-0442A	02
01	MA	WILMINGTON, TOWN OF	2502270004C	09-FEB-2000	00-01-0274A	02
01	MA	WINCHENDON, TOWN OF	2503480010B	14-JAN-2000	99-01-1260A	02
01	MA	WINCHENDON, TOWN OF	2503480010B	18-FEB-2000	00-01-0434X	02
01	MA	WINTHROP, TOWN OF	2502890001C	05-JAN-2000	99-01-1162A	02
01	MA	YARMOUTH, TOWN OF	2500150006D	23-MAY-2000	00-01-0444A	02
01	ME	APPLETON, TOWN OF	230073 B	23-MAR-2000	00-01-0390A	02
01	ME	BETHEL, TOWN OF	2300880005C	01-JUN-2000	99-01-1354A	02
01	ME	BLUE HILL, TOWN OF	2302740020A	13-APR-2000	00-01-0484A	02
01	ME	CARRABASSETT VALLEY, TOWN OF	2300560010B	25-MAY-2000	00-01-0512A	02
01	ME	CLINTON, TOWN OF	2302360003A	12-JAN-2000	00-01-0256A	02
01	ME	DENMARK, TOWN OF	2304760015A	23-MAY-2000	00-01-0736A	02
01	ME	ELIOT, TOWN OF	2301490010B	13-APR-2000	00-01-0244A	02
01	ME	ENFIELD, TOWN OF	2303840010A	30-MAY-2000	00-01-0754A	02
01	ME	FREEPORT, TOWN OF	2300460014B	04-MAY-2000	00-01-0490A	02
01	ME	FRIENDSHIP, TOWN OF	2302250015A	21-JAN-2000	00-01-0258A	01
01	ME	GOULDSBORO,TOWN OF	2302830010B	29-MAR-2000	00-01-0416A	02
01	ME	GOULDSBORO,TOWN OF	2302830020B	12-MAY-2000	00-01-0462A	02
01	ME	GRAY, TOWN OF	2300480015A	05-JAN-2000	00-01-0128A	02
01	ME	GRAY, TOWN OF	2300480015A	19-JAN-2000	00-01-0206A	02
01	ME	HARPSWELL, TOWN OF	2301690009B	02-MAY-2000	00-01-0544A	02
01	ME	HARPSWELL, TOWN OF	2301690010B	05-JAN-2000	99-01-1394A	01
01	ME	HARPSWELL, TOWN OF	2301690011B	23-MAY-2000	00-01-0564A	02
01	ME	HARTLAND, TOWN OF	230361 A	14-MAR-2000	00-01-0282A	02
01	ME	HARTLAND, TOWN OF	230361 A	21-JAN-2000	00-01-0234A	02
01	ME	HARTLAND, TOWN OF	230361 A	29-MAR-2000	00-01-0362A	02
01	ME	LAMOINE, TOWN OF	2302850010A	23-MAY-2000	00-01-0498A	02
01	ME	LAMOINE, TOWN OF	2302850010A	24-MAY-2000	99-01-1242A	02
01	ME	LEEDS, TOWN OF	2300030005B	03-MAR-2000	99-01-1340A	02
01	ME	LEWISTON, CITY OF	2300040005B	03-MAR-2000	00-01-0406A	02
01	ME	LIMERICK, TOWN OF	2301940007B	09-MAY-2000	00-01-0456A	02
01	ME	LINCOLNVILLE, TOWN OF	2301720015A	02-MAY-2000	00-01-0646A	02
01	ME	MADAWASKA, TOWN OF	230024 B	30-MAY-2000	00-01-0546A	02
01	ME	NAPLES, TOWN OF	2300500016B	23-FEB-2000	00-01-0352A	02
01	ME	NORWAY, TOWN OF	2300960005B	29-MAR-2000	00-01-0418A	02
01	ME	OLD TOWN, CITY OF	2301120003A	28-JAN-2000	00-01-0090A	02
01	ME	OWL'S HEAD, TOWN OF	2300750005B	03-JAN-2000	00-01-0054A	02
01	ME	PALMYRA, TOWN OF	230366 B	06-APR-2000	99-01-1188A	02
01	ME	PORTLAND, CITY OF	2300510007C	09-MAY-2000	00-01-0118A	02
01	ME	PORTLAND, CITY OF	2300510007C	11-FEB-2000	00-01-0120A	02
01	ME	RANGELEY, TOWN OF	2303520006B	12-APR-2000	00-01-0474A	02
01	ME	RANGELEY, TOWN OF	2303520009B	11-MAY-2000	00-01-0448A	02
01	ME	RAYMOND, TOWN OF	2302050020B	21-MAR-2000	00-01-0284A	02
01	ME	SACO, CITY OF	2301550029C	02-MAY-2000	00-01-0672A	02
01	ME	SACO, CITY OF	2301550029C	30-MAR-2000	00-01-0438A	02
01	ME	SEBAGO, TOWN OF	2302060005B	19-JAN-2000	99-01-1392A	02
01	ME	SOUTHPORT, TOWN OF	2302210001B	22-MAR-2000	00-01-0218A	02
01	ME	SOUTHPORT, TOWN OF	2302210001B	31-MAR-2000	00-01-005P	05
01	ME	ST. GEORGE, TOWN OF	2302290010C	12-JAN-2000	00-01-0088A	02

Region	State	Community	Map panel	Determination date	Case No.	Type
01	ME	STANDISH, TOWN OF	2302070040B	02-FEB-2000	00-01-0190A	02
01	ME	SWANS ISLAND,TOWN OF	230297 A	10-MAY-2000	00-01-0360A	02
01	ME	SWANVILLE,TOWN OF	230267 A	29-FEB-2000	00-01-0402A	02
01	ME	T17 R04 WELS, TOWNSHIP OF	230453 A	22-FEB-2000	00-01-0230A	02
01	ME	TRENTON, TOWN OF	2302990005A	14-JAN-2000	00-01-0276A	02
01	ME	WATERBORO, TOWN OF	2301990007C	02-FEB-2000	00-01-0210A	02
01	ME	WINDHAM, TOWN OF	2301890015B	13-APR-2000	00-01-0480A	02
01	ME	YARMOUTH, TOWN OF	2300550003B	11-MAY-2000	00-01-0514A	02
01	NH	BRENTWOOD, TOWN OF	3301250001C	28-JAN-2000	00-01-003P	06
01	NH	BRISTOL, TOWN OF	3300470005C	12-APR-2000	99-01-1176A	02
01	NH	COLEBROOK, TOWN OF	3300310010B	17-MAR-2000	00-01-0148A	02
01	NH	CONWAY, TOWN OF	3300110020B	24-JAN-2000	00-01-0124A	02
01	NH	CORNISH, TOWN OF	3301550010B	21-MAR-2000	99-01-1346A	02
01	NH	DANVILLE, TOWN OF	330199 A	02-MAY-2000	00-01-0058A	02
01	NH	EPPING, TOWN OF	3301290010B	07-MAR-2000	99-01-1028A	02
01	NH	FREMONT, TOWN OF	3301310005C	23-MAY-2000	00-01-0640A	02
01	NH	HAMPTON, TOWN OF	3301320008B	10-MAY-2000	00-01-0198A	02
01	NH	HAMPTON, TOWN OF	3301320008B	12-JAN-2000	99-01-1330A	02
01	NH	HILLSBOROUGH, TOWN OF	3300900020B	17-FEB-2000	99-01-1382A	01
01	NH	KEENE, CITY OF	3300230003C	21-APR-2000	00-01-001P	06
01	NH	KEENE, CITY OF	3300230008C	02-FEB-2000	00-01-0238A	02
01	NH	LACONIA, CITY OF	3300050002B	02-MAY-2000	00-01-0578A	02
01	NH	LEBANON, CITY OF	3300610007C	12-JAN-2000	00-01-0112A	01
01	NH	LISBON, TOWN OF	3300630005B	11-MAY-2000	00-01-0606A	02
01	NH	LOUDON, TOWN OF	3301170003B	17-FEB-2000	99-01-1402A	02
01	NH	MANCHESTER, CITY OF	3301690010B	01-MAR-2000	00-01-0296A	01
01	NH	MILFORD, TOWN OF	3300960004B	04-APR-2000	00-01-0146A	02
01	NH	MILTON, TOWN OF	3301490006B	26-MAY-2000	00-01-0404A	02
01	NH	NEWPORT, TOWN OF	3301610010D	15-FEB-2000	00-01-0320A	02
01	NH	PELHAM, TOWN OF	3301000003B	22-FEB-2000	00-01-0158A	02
01	NH	PETERBOROUGH, TOWN OF	3301010007A	14-APR-2000	00-01-0524A	02
01	NH	RAYMOND, TOWN OF	3301400010D	02-MAY-2000	00-01-0526A	02
01	NH	SALEM, TOWN OF	3301420005C	21-JAN-2000	00-01-0170A	02
01	NH	WAKEFIELD, TOWN OF	3300190005A	12-APR-2000	99-01-1142A	02
01	NH	WEARE, TOWN OF	3302350020B	02-FEB-2000	00-01-0382A	02
01	NH	WILMOT, TOWN OF	330124 B	03-MAR-2000	00-01-0224A	02
01	NH	WILMOT, TOWN OF	330124 B	24-FEB-2000	00-01-0192A	02
01	NH	WOLFEBORO, TOWN OF	3302390015A	05-JAN-2000	00-01-0136A	02
01	RI	CHARLESTOWN, TOWN OF	4453950005E	29-FEB-2000	00-01-0342A	02
01	RI	COVENTRY, TOWN OF	4400040015A	02-MAY-2000	00-01-0350A	02
01	RI	COVENTRY, TOWN OF	4400040015A	18-APR-2000	00-01-0314A	02
01	RI	COVENTRY, TOWN OF	4400040015A	18-APR-2000	00-01-0396A	02
01	RI	COVENTRY, TOWN OF	4400040015A	25-APR-2000	00-01-0388A	02
01	RI	COVENTRY, TOWN OF	4400040015A	28-MAR-2000	00-01-0326A	02
01	RI	EAST GREENWICH, TOWN OF	4453970002B	28-JAN-2000	00-01-0220A	02
01	RI	EAST PROVIDENCE, CITY OF	4453980003C	18-APR-2000	00-01-0196A	01
01	RI	NORTH PROVIDENCE, TOWN OF	4400200001C	07-JAN-2000	00-01-0034A	02
01	RI	NORTH SMITHFIELD, TOWN OF	4400210005C	25-MAY-2000	00-01-0580A	02
01	RI	WARWICK, CITY OF	4454090006E	04-APR-2000	00-01-0430A	02
01	VT	BRANDON, TOWN OF	5000900015C	06-APR-2000	00-01-0300A	02
01	VT	BRIDGEWATER, TOWN OF	5001440015B	11-MAY-2000	00-01-0502A	02
01	VT	CANAAN, TOWN OF	5000460010B	30-MAY-2000	00-01-0644A	02
01	VT	CRAFTSBURY, TOWN OF	500247 B	11-FEB-2000	00-01-0394A	02
01	VT	CRAFTSBURY, TOWN OF	500247 B	18-FEB-2000	00-01-0356A	02
01	VT	CRAFTSBURY, TOWN OF	500247 B	28-MAR-2000	00-01-0570A	02
01	VT	ESSEX, TOWN OF	5000340011B	04-APR-2000	00-01-0344A	02
01	VT	FAYSTON, TOWN OF	5003260011A	12-JAN-2000	00-01-0228A	17
01	VT	FAYSTON, TOWN OF	5003260011A	17-FEB-2000	00-01-0452X	17
01	VT	FERRISBURG, TOWN OF	5000020020B	14-JAN-2000	00-01-0132A	02
01	VT	GRANVILLE, TOWN OF	5000030012A	11-MAY-2000	00-01-0574A	02
01	VT	HARTFORD, TOWN OF	5001480007B	09-FEB-2000	00-01-0324X	01
01	VT	JEFFERSONVILLE, VILLAGE OF	5000620001A	24-FEB-2000	00-01-0072A	01
01	VT	MONTPELIER, CITY OF	5055180002A	11-MAY-2000	00-01-0338A	02
01	VT	MONTPELIER, CITY OF	5055180002A	28-JAN-2000	00-01-0264A	02
01	VT	NEWPORT, CITY OF	5000860001B	11-MAY-2000	00-01-0610A	02
01	VT	NORTH HERO, TOWN OF	5002250015A	11-MAY-2000	00-01-0572A	02
01	VT	PROCTOR, TOWN OF	5002650005B	02-MAY-2000	00-01-0478A	02
01	VT	TROY, TOWN OF	5000890005B	28-JAN-2000	00-01-0096A	02
01	VT	WALLINGFORD, TOWN OF	5001030005B	12-APR-2000	99-01-1302A	02
01	VT	WELLS, TOWNSHIP OF	5002710001B	17-FEB-2000	00-01-0086A	02
01	VT	WEST FAIRLEE, TOWN OF	5000790005B	11-MAY-2000	00-01-0600A	02
01	VT	WILLIAMSTOWN, TOWN OF	5000800005B	11-MAY-2000	00-01-0620A	02
02	NJ	ALLOWAY, TOWNSHIP OF	3404130001B	09-FEB-2000	00-02-0150A	02

Region	State	Community	Map panel	Determination date	Case No.	Type
02	NJ	BERKELEY HEIGHTS, TOWNSHIP OF	3404590001D	15-MAR-2000	00-02-0512A	02
02	NJ	BERKELEY HEIGHTS, TOWNSHIP OF	3404590002D	19-JAN-2000	99-02-1416A	02
02	NJ	COLTS NECK, TOWNSHIP OF	3402910002C	28-JAN-2000	00-02-0248A	02
02	NJ	EAST RUTHERFORD, BOROUGH OF	34003C0251F	04-MAY-2000	00-02-0632A	02
02	NJ	FAIR LAWN, BOROUGH OF	34003C0178F	28-JAN-2000	99-02-1194A	02
02	NJ	FRANKLIN LAKES, BOROUGH OF	34003C0064F	07-MAR-2000	99-02-1032A	02
02	NJ	FRANKLIN LAKES, BOROUGH OF	34003C0064F	13-APR-2000	00-02-0306A	02
02	NJ	HAMILTON, TOWNSHIP OF	3400090001A	12-JAN-2000	00-02-0314A	02
02	NJ	HAMILTON, TOWNSHIP OF	3402460015C	09-FEB-2000	99-02-1318A	02
02	NJ	LINCOLN PARK, BOROUGH OF	3453000001B	02-FEB-2000	99-02-1414A	02
02	NJ	MANALAPAN, TOWNSHIP OF	3403080001A	28-JAN-2000	00-02-0182A	02
02	NJ	MANASQUAN, BOROUGH OF	3453030001C	11-JAN-2000	00-02-0120A	02
02	NJ	MOUNT LAUREL, TOWNSHIP OF	3401070015E	03-MAR-2000	99-02-1022A	01
02	NJ	NEW PROVIDENCE, BOROUGH OF	3453060001C	14-MAR-2000	00-02-0054A	02
02	NJ	NEWARK, CITY OF	3401890003B	29-FEB-2000	00-02-0372A	02
02	NJ	OLD BRIDGE, TOWN OF	3402650004D	14-JAN-2000	99-02-1232A	02
02	NJ	PALMYRA, BOROUGH OF	3401100001C	23-FEB-2000	00-02-0354A	01
02	NJ	PALMYRA, BOROUGH OF	3401100001C	23-MAY-2000	00-02-0456A	01
02	NJ	PEQUANNOCK, TOWNSHIP OF	3453110001C	06-APR-2000	00-02-0322A	02
02	NJ	PEQUANNOCK, TOWNSHIP OF	3453110003C	11-FEB-2000	00-02-0418A	01
02	NJ	PEQUANNOCK, TOWNSHIP OF	3453110003C	30-MAR-2000	00-02-0332A	02
02	NJ	RAMSEY, BOROUGH OF	34003C0067F	02-FEB-2000	00-02-0312A	01
02	NJ	RINGWOOD, BOROUGH OF	3404070006B	25-MAY-2000	00-02-0562A	02
02	NJ	SAYREVILLE, BOROUGHS OF	3402760001C	05-JAN-2000	00-02-0280A	02
02	NJ	SOUTH BRUNSWICK, TOWNSHIP OF	3402780010B	14-JAN-2000	00-02-0114A	02
02	NJ	SUMMIT, CITY OF	3404760001A	24-FEB-2000	00-02-0210A	01
02	NJ	TRENTON, CITY OF	3453250002B	11-FEB-2000	00-02-0390A	02
02	NJ	VERNON, TOWNSHIP OF	3405610035A	15-MAR-2000	99-02-1102A	02
02	NJ	WAYNE, TOWNSHIP OF	3453270007B	02-FEB-2000	00-02-0346A	02
02	NJ	WAYNE, TOWNSHIP OF	3453270008B	25-APR-2000	99-02-1308A	01
02	NJ	WEST DEPTFORD, TOWNSHIP OF	3402140003B	28-MAR-2000	00-02-0138A	02
02	NJ	WEST WINDSOR, TOWNSHIP OF	3402560010C	11-FEB-2000	00-02-0400A	02
02	NJ	WESTFIELD, TOWN OF	3404780001B	16-MAY-2000	00-02-0238A	02
02	NJ	WESTWOOD, BOROUGH OF	34003C0181F	15-FEB-2000	00-02-0264A	01
02	NY	ALDEN, TOWN OF	3602250010C	28-JAN-2000	00-02-0154A	02
02	NY	AMHERST, TOWN OF	3602260004D	07-MAR-2000	00-02-0404A	02
02	NY	AMHERST, TOWN OF	3602260004D	29-FEB-2000	00-02-0382A	02
02	NY	AMHERST, TOWN OF	3602260007E	02-FEB-2000	00-02-0334A	02
02	NY	AMHERST, TOWN OF	3602260007E	11-MAY-2000	00-02-0296A	02
02	NY	BATAVIA, TOWN OF	3602780015B	16-FEB-2000	00-02-0128A	02
02	NY	BAYVILLE, VILLAGE OF	36059C0039F	19-JAN-2000	00-02-0050A	02
02	NY	BELLMONT, TOWN OF	361392 A	03-JAN-2000	00-02-0070A	02
02	NY	BOONVILLE, TOWN OF	3605190010B	16-MAY-2000	00-02-0384A	02
02	NY	BROOKHAVEN,TOWN OF	36103C0753G	13-APR-2000	00-02-0226A	02
02	NY	BUFFALO, CITY OF	3602300010C	04-FEB-2000	00-02-0192A	02
02	NY	BUFFALO, CITY OF	3602300010C	08-FEB-2000	00-02-0164A	02
02	NY	BUFFALO, CITY OF	3602300010C	09-FEB-2000	00-02-0246A	02
02	NY	BUFFALO, CITY OF	3602300010C	11-MAY-2000	00-02-0168A	02
02	NY	BUFFALO, CITY OF	3602300010C	19-JAN-2000	00-02-0194A	02
02	NY	BUFFALO, CITY OF	3602300010C	25-FEB-2000	00-02-0380A	02
02	NY	BUFFALO, CITY OF	3602300010C	28-MAR-2000	00-02-0278A	02
02	NY	CAMILLUS, TOWN OF	3605700006D	18-FEB-2000	00-02-0416A	02
02	NY	CANANDAIGUA, TOWN OF	3605980025C	28-JAN-2000	99-02-980A	02
02	NY	CASTILE, TOWN OF	361243 A	27-APR-2000	00-02-0276A	02
02	NY	CHESTER, TOWN OF	3608700010B	11-MAY-2000	00-02-0378A	02
02	NY	CICERO, TOWN OF	3605720003D	09-FEB-2000	00-02-0190A	02
02	NY	CICERO, TOWN OF	3605720005D	11-APR-2000	00-02-0444A	02
02	NY	CICERO, TOWN OF	3605720005D	22-FEB-2000	00-02-0300A	02
02	NY	CICERO, TOWN OF	3605720006D	11-FEB-2000	00-02-0388A	02
02	NY	CLARENCE, TOWN OF	3602320005C	05-JAN-2000	00-02-0046A	02
02	NY	CLARENCE, TOWN OF	3602320005C	11-MAY-2000	00-02-0552A	02
02	NY	CLARENCE, TOWN OF	3602320005C	14-APR-2000	00-02-0398X	02
02	NY	CLARENCE, TOWN OF	3602320005C	14-JAN-2000	00-02-0302A	02
02	NY	CLARENCE, TOWN OF	3602320005C	14-MAR-2000	00-02-0272A	02
02	NY	CLARENCE, TOWN OF	3602320005C	16-MAY-2000	00-02-0442A	02
02	NY	CLARENCE, TOWN OF	3602320005C	23-FEB-2000	00-02-0432A	02
02	NY	CLARENCE, TOWN OF	3602320010C	16-MAY-2000	00-02-0440A	02
02	NY	CLARENCE, TOWN OF	3602320011C	11-MAY-2000	00-02-0206A	01
02	NY	CLARENCE, TOWN OF	3602320013C	18-FEB-2000	00-02-0406X	02
02	NY	CLARKSTOWN, TOWN OF	3606790006E	23-MAY-2000	00-02-0056A	02
02	NY	CLARKSTOWN, TOWN OF	3606790006E	28-JAN-2000	00-02-0166A	02
02	NY	COPAKE, TOWN OF	360174 B	05-JAN-2000	00-02-0162A	02
02	NY	DRESDEN, TOWN OF	3614100015B	17-FEB-2000	00-02-0474X	02

Region	State	Community	Map panel	Determination date	Case No.	Type
02	NY	EAST FISHKILL, TOWN OF	3613360009B	07-JAN-2000	99-02-1364A	02
02	NY	EAST ROCKAWAY, VILLAGE OF	36059C0218F	25-FEB-2000	00-02-0148A	02
02	NY	EASTON, TOWN OF	3612240010B	06-JAN-2000	00-02-0316X	02
02	NY	ELMA,TOWN OF	3602390006B	25-FEB-2000	99-02-1270A	02
02	NY	ELMIRA HEIGHTS, VILLAGE OF	3601520001B	18-APR-2000	00-02-0368A	02
02	NY	FRANKFORT, TOWN OF	360303 C	02-MAY-2000	99-02-1358A	02
02	NY	FRANKLIN, TOWN OF	361397 A	11-MAY-2000	00-02-0366A	02
02	NY	GLENVILLE,TOWN OF	3607380041B	28-JAN-2000	00-02-0270A	02
02	NY	GLENVILLE,TOWN OF	3607380041B	29-FEB-2000	00-02-0434X	02
02	NY	GREECE, TOWN OF	3604170006E	24-JAN-2000	99-02-1316A	02
02	NY	HENRIETTA, TOWN OF	3604190005E	08-FEB-2000	00-02-0146A	02
02	NY	HENRIETTA, TOWN OF	3604190005E	28-MAR-2000	00-02-0510X	02
02	NY	HORSEHEADS, TOWN OF	3601530005C	18-FEB-2000	00-02-0106A	17
02	NY	ISLIP,TOWNSHIP OF	36103C0882G	21-JAN-2000	99-02-1030A	02
02	NY	KENDALL, TOWN OF	3606430005B	10-MAR-2000	00-02-0294A	02
02	NY	LANCASTER, VILLAGE OF	3602480001C	28-JAN-2000	00-02-0140A	02
02	NY	LEWISTON, TOWN OF	3605020010B	29-MAR-2000	00-02-0554X	02
02	NY	LINDENHURST, VILLAGE OF	36103C0861G	22-FEB-2000	00-02-0174A	02
02	NY	LITTLE VALLEY, TOWN OF	3610660001B	07-MAR-2000	99-02-998A	02
02	NY	LUMBERLAND, TOWN OF	360825 B	02-FEB-2000	99-02-1248A	02
02	NY	MANLIUS, TOWN OF	3605840005E	04-FEB-2000	00-02-0268A	02
02	NY	MANLIUS, TOWN OF	3605840005E	05-JAN-2000	00-02-0198A	02
02	NY	MANLIUS, TOWN OF	3605840005E	14-JAN-2000	00-02-0156A	02
02	NY	MOHAWK, VILLAGE OF	3603140001C	28-JAN-2000	00-02-0250A	02
02	NY	NASSAU, TOWN OF	3611550011A	15-FEB-2000	00-02-0408A	02
02	NY	NEW YORK, CITY OF	3604970002B	21-MAR-2000	00-02-0320A	02
02	NY	NEW YORK, CITY OF	3604970081C	21-MAR-2000	00-02-0216A	02
02	NY	NEW YORK, CITY OF	3604970082C	28-MAR-2000	00-02-0394A	02
02	NY	NEW YORK, CITY OF	3604970092C	07-JAN-2000	00-02-0218A	02
02	NY	NEW YORK, CITY OF	3604970092C	15-MAR-2000	00-02-0528A	02
02	NY	NEW YORK, CITY OF	3604970092C	21-JAN-2000	00-02-0212A	02
02	NY	NEW YORK, CITY OF	3604970105C	21-JAN-2000	00-02-0214A	02
02	NY	NEW YORK, CITY OF	3604970105C	28-MAR-2000	00-02-0392A	02
02	NY	NEW YORK, CITY OF	3604970115B	12-JAN-2000	00-02-0326A	02
02	NY	NEW YORK, CITY OF	3604970125D	05-JAN-2000	00-02-0202A	02
02	NY	NEW YORK, CITY OF	3604970125D	09-FEB-2000	00-02-0292A	02
02	NY	NEW YORK, CITY OF	3604970126B	12-JAN-2000	00-02-0240A	02
02	NY	NEW YORK, CITY OF	3604970128D	13-APR-2000	00-02-0396A	02
02	NY	NEW YORK, CITY OF	3604970129D	14-APR-2000	00-02-0610X	02
02	NY	NEW YORK, CITY OF	3604970129D	15-MAR-2000	00-02-0184A	02
02	NY	NEWCOMB, TOWN OF	361390 A	22-FEB-2000	00-02-0352A	02
02	NY	NORTH NORWICH, TOWN OF	3610890010B	04-APR-2000	00-02-0496A	02
02	NY	NORTHAMPTON, TOWN OF	361400 B	29-FEB-2000	00-02-0336A	02
02	NY	ONEONTA, CITY OF	3606670005B	09-MAY-2000	00-02-005P	06
02	NY	ONEONTA, TOWN OF	3612750026B	09-MAY-2000	00-02-007P	06
02	NY	ONONDAGA, TOWN OF	3605880015B	28-MAR-2000	00-02-0284A	02
02	NY	PENDLETON, TOWN OF	3605090005B	09-FEB-2000	00-02-0364A	02
02	NY	PIERMONT, VILLAGE OF	3606870001C	25-MAY-2000	99-02-1344A	01
02	NY	PLATTSBURGH, CITY OF	3601680001B	27-JAN-2000	00-02-0112A	02
02	NY	PULTENEY, TOWN OF	3607800002B	14-JAN-2000	99-02-1072A	02
02	NY	ROSEBOOM, TOWN OF	361421 A	09-FEB-2000	00-02-0358A	02
02	NY	ROTTERDAM, TOWN OF	3607400006B	01-JUN-2000	00-02-0410A	02
02	NY	SALINA, TOWN OF	3605910001A	25-FEB-2000	00-02-0230A	02
02	NY	SALINA, TOWN OF	3605910002A	18-FEB-2000	00-02-0188A	02
02	NY	SHANDAKEN, TOWN OF	3608640020C	23-MAY-2000	00-02-0340A	02
02	NY	SMITHFIELD, TOWN OF	361294 B	09-FEB-2000	00-02-0274X	02
02	NY	SMITHFIELD, TOWN OF	361294 B	19-JAN-2000	99-02-1070A	02
02	NY	TORREY, TOWN OF	3609660010B	23-MAR-2000	00-02-0256A	02
02	NY	VIENNA, TOWN OF	3605620025C	04-FEB-2000	00-02-0342A	02
02	NY	WEBB, TOWN OF	360321 A	14-MAR-2000	99-02-1398A	02
02	NY	WEBB, TOWN OF	360321 A	15-MAR-2000	00-02-0158A	02
02	NY	WEBB, TOWN OF	360321 A	18-MAY-2000	00-02-0356A	02
02	NY	WINFIELD, TOWN OF	3603230001B	20-APR-2000	99-02-051P	05
02	PR	PUERTO RICO,COMMONWEALTH OF	7200000053D	01-MAR-2000	00-02-0310A	02
02	PR	PUERTO RICO,COMMONWEALTH OF	7200000063G	06-JAN-2000	00-02-0002A	01
02	PR	PUERTO RICO,COMMONWEALTH OF	7200000185B	25-JAN-2000	99-02-061P	05
02	PR	PUERTO RICO,COMMONWEALTH OF	7200000188C	01-JUN-2000	00-02-0012A	01
02	PR	PUERTO RICO,COMMONWEALTH OF	7200000277D	06-JAN-2000	99-02-1046A	01
02	PR	PUERTO RICO,COMMONWEALTH OF	7200000286D	20-APR-2000	00-02-0010A	01
03	DE	DOVER, CITY OF	1000060005C	02-MAY-2000	00-03-0848A	17
03	DE	DOVER, CITY OF	1000060005C	20-APR-2000	00-03-0856A	02
03	DE	ELSMERE, TOWN OF	10003C0151F	02-MAY-2000	00-03-1216A	02
03	DE	GEORGETOWN, TOWN OF	10005C0300F	09-FEB-2000	00-03-0500A	02

Region	State	Community	Map panel	Determination date	Case No.	Type
03	DE	GREENWOOD, TOWN OF	10005C0104F	23-MAY-2000	00-03-1044A	02
03	DE	KENT COUNTY *	1000010075B	09-FEB-2000	00-03-0328A	02
03	DE	KENT COUNTY *	1000010075B	18-APR-2000	00-03-1132A	02
03	DE	KENT COUNTY *	1000010075B	20-APR-2000	00-03-0754A	02
03	DE	KENT COUNTY *	1000010080B	02-FEB-2000	00-03-0760A	02
03	DE	KENT COUNTY *	1000010080B	04-FEB-2000	00-03-0314A	02
03	DE	KENT COUNTY *	1000010080B	23-MAY-2000	00-03-1398A	02
03	DE	KENT COUNTY *	1000010080B	27-APR-2000	00-03-031P	05
03	DE	KENT COUNTY *	1000010175B	31-MAY-2000	00-03-0780A	01
03	DE	KENT COUNTY *	1000010200B	09-FEB-2000	00-03-0358A	02
03	DE	LEWES, CITY OF	10005C0195F	18-APR-2000	00-03-0930A	02
03	DE	LEWES, CITY OF	10005C0195F	27-APR-2000	00-03-073P	05
03	DE	NEW CASTLE COUNTY *	10003C0067F	27-APR-2000	00-03-1138A	02
03	DE	NEW CASTLE COUNTY *	10003C0145F	27-APR-2000	00-03-0922A	02
03	DE	NEW CASTLE COUNTY *	10003C0300F	21-MAR-2000	00-03-1048A	02
03	DE	NEW CASTLE COUNTY *	10003C0320F	27-MAY-2000	99-03-065P	05
03	DE	SUSSEX COUNTY*	10005C00195F	27-APR-2000	00-03-073P	05
03	DE	SUSSEX COUNTY*	10005C0039F	25-APR-2000	00-03-1162A	02
03	DE	SUSSEX COUNTY*	10005C0100F	30-MAY-2000	00-03-0868A	02
03	DE	SUSSEX COUNTY*	10005C0125F	27-APR-2000	00-03-1016A	02
03	DE	SUSSEX COUNTY*	10005C0355G	23-MAY-2000	00-03-1366A	02
03	DE	SUSSEX COUNTY*	10005C0510F	16-MAR-2000	00-03-0602A	02
03	MD	ALLEGANY COUNTY *	2400010054A	05-JAN-2000	00-03-0348A	02
03	MD	ANNE ARUNDEL COUNTY *	2400080001C	27-APR-2000	00-03-1074A	01
03	MD	ANNE ARUNDEL COUNTY *	2400080020C	30-MAY-2000	00-03-1034A	02
03	MD	ANNE ARUNDEL COUNTY *	2400080022C	02-MAY-2000	00-03-0318A	02
03	MD	ANNE ARUNDEL COUNTY *	2400080043C	28-JAN-2000	00-03-0496A	02
03	MD	ANNE ARUNDEL COUNTY *	2400080044D	03-MAR-2000	00-03-0580A	02
03	MD	ANNE ARUNDEL COUNTY *	2400080044D	12-APR-2000	00-03-0836A	02
03	MD	ANNE ARUNDEL COUNTY *	2400080044D	18-APR-2000	00-03-1226X	02
03	MD	ANNE ARUNDEL COUNTY *	2400080051C	01-MAR-2000	00-03-0488A	02
03	MD	BALTIMORE COUNTY*	2400100245E	11-FEB-2000	00-03-0360A	17
03	MD	BALTIMORE COUNTY*	2400100270B	18-APR-2000	00-03-1070A	02
03	MD	BALTIMORE COUNTY*	2400100360B	05-JAN-2000	00-03-0172A	02
03	MD	BALTIMORE COUNTY*	2400100390B	21-JAN-2000	00-03-0100A	02
03	MD	BALTIMORE COUNTY*	2400100410B	23-MAY-2000	00-03-0832A	02
03	MD	BALTIMORE COUNTY*	2400100440C	02-MAY-2000	00-03-0662A	02
03	MD	BALTIMORE COUNTY*	2400100440C	09-MAY-2000	00-03-0716A	02
03	MD	BALTIMORE COUNTY*	2400100455B	04-APR-2000	00-03-0986A	02
03	MD	BALTIMORE COUNTY*	2400100505B	18-FEB-2000	00-03-0180A	02
03	MD	BALTIMORE COUNTY*	2400100555B	29-MAR-2000	00-03-0708A	02
03	MD	BEL AIR, TOWN OF	24025C0161D	10-JAN-2000	00-03-0774V	19
03	MD	CAMBRIDGE, CITY OF	2400980001B	13-APR-2000	00-03-0320A	02
03	MD	CARROLL COUNTY *	2400150050B	06-APR-2000	00-03-0770A	02
03	MD	CECIL COUNTY*	2400190031B	27-APR-2000	00-03-1066A	02
03	MD	CECIL COUNTY*	2400190042A	18-MAY-2000	00-03-1024A	02
03	MD	CHARLES COUNTY *	2400890027B	17-MAR-2000	00-03-0346A	02
03	MD	CHARLES COUNTY *	2400890035B	13-APR-2000	00-03-1050A	02
03	MD	FREDERICK COUNTY *	2400270115B	13-APR-2000	00-03-0734A	02
03	MD	FREDERICK COUNTY *	2400270180A	06-APR-2000	99-03-1300A	02
03	MD	FREDERICK COUNTY *	2400270180A	12-JAN-2000	00-03-0352A	02
03	MD	FREDERICK COUNTY *	2400270180A	19-MAY-2000	00-03-0560A	02
03	MD	FREDERICK, CITY OF	2400270115B	13-MAR-2000	99-03-179P	05
03	MD	FREDERICK, CITY OF	2400300004C	12-JAN-2000	00-03-0168A	02
03	MD	HARFORD COUNTY *	24025C0004D	10-JAN-2000	00-03-0750V	19
03	MD	HARFORD COUNTY *	24025C0004D	12-JAN-2000	99-03-1242A	02
03	MD	HARFORD COUNTY *	24025C0004D	12-JAN-2000	99-03-1244A	02
03	MD	HARFORD COUNTY *	24025C0254D	03-MAY-2000	99-03-121P	05
03	MD	HAVRE DE GRACE, CITY OF	24025C0205D	07-MAR-2000	00-03-0300A	02
03	MD	HOWARD COUNTY*	2400440023B	21-JAN-2000	00-03-0506A	02
03	MD	MONTGOMERY COUNTY *	2400490050B	13-MAR-2000	99-03-1576P	05
03	MD	MONTGOMERY COUNTY *	2400490125C	13-MAR-2000	99-03-1576P	.....
03	MD	MONTGOMERY COUNTY *	2400490150B	11-FEB-2000	00-03-0124A	02
03	MD	MONTGOMERY COUNTY *	2400490150B	30-MAR-2000	00-03-1128X	02
03	MD	NORTH EAST, TOWN OF	2400230001A	01-FEB-2000	00-04	02
03	MD	PRINCE GEORGES COUNTY *	2452080060C	14-MAR-2000	00-03-0672A	02
03	MD	QUEEN ANNES COUNTY*	2400540006B	16-MAY-2000	00-03-0704A	02
03	MD	QUEEN ANNES COUNTY*	2400540045B	26-APR-2000	00-03-1372	02
03	MD	QUEEN ANNES COUNTY*	2400540047B	11-APR-2000	00-03-0898X	02
03	MD	ST. MARYS COUNTY*	2400640041D	25-MAY-2000	00-03-0712A	02
03	MD	TALBOT COUNTY *	2400660038A	13-APR-2000	00-03-0590A	02
03	MD	TALBOT COUNTY *	2400660038A	16-MAY-2000	00-03-0652X	02
03	MD	WASHINGTON COUNTY *	2400700170A	01-MAR-2000	00-03-0336A	02

Region	State	Community	Map panel	Determination date	Case No.	Type
03	MD	WORCESTER COUNTY *	2400830025A	16-MAY-2000	00-03-1006A	02
03	PA	BENSALEM TOWNSHIP OF	42017C0506F	18-APR-2000	00-03-0758A	02
03	PA	BRISTOL, TOWNSHIP OF	42017C0444F	18-APR-2000	00-03-0852A	02
03	PA	BRISTOL, TOWNSHIP OF	42017C0462F	03-FEB-2000	00-05	02
03	PA	BRISTOL, TOWNSHIP OF	42017C0462F	18-MAY-2000	00-03-1246A	02
03	PA	BRISTOL, TOWNSHIP OF	42017C0508F	12-JAN-2000	00-03-0370A	02
03	PA	BUCKINGHAM, TOWNSHIP OF	42017C0303F	20-APR-2000	00-03-0768A	02
03	PA	BUTLER, TOWNSHIP OF	421247 A	28-MAR-2000	00-03-0006A	02
03	PA	CLARKS SUMMIT, BOROUGH OF	4205270001B	06-APR-2000	00-03-059P	06
03	PA	CLARKSVILLE, BOROUGH OF	4204760001B	07-JAN-2000	00-03-0588A	02
03	PA	CONEMAUGH, TOWNSHIP OF	4220470005A	13-APR-2000	00-03-0664A	02
03	PA	CUMRU, TOWNSHIP OF	420110C0516E	11-APR-2000	98-03-047P	.....
03	PA	CUMRU, TOWNSHIP OF	42011C0512E	11-APR-2000	98-03-047P	05
03	PA	DOYLESTOWN, TOWNSHIP OF	42017C0311F	02-MAY-2000	00-03-1072A	02
03	PA	DOYLESTOWN, TOWNSHIP OF	42017C0311F	13-APR-2000	00-03-0188A	17
03	PA	DOYLESTOWN, TOWNSHIP OF	42017C0311F	25-APR-2000	00-03-0722A	02
03	PA	EAST GOSHEN, TOWNSHIP OF	42029C0218D	18-FEB-2000	99-03-187P	05
03	PA	EAST GOSHEN, TOWNSHIP OF	42029C0358D	23-MAR-2000	00-03-0740A	17
03	PA	EAST GOSHEN, TOWNSHIP OF	42029C0358D	28-MAR-2000	00-03-0830A	17
03	PA	EAST LAMPETER, TOWNSHIP OF	4217710005B	10-MAY-2000	00-03-0860A	02
03	PA	FALLS, TOWNSHIP OF	42017C0461F	18-APR-2000	00-03-1218A	02
03	PA	FALLS, TOWNSHIP OF	42017C0462F	09-FEB-2000	00-03-0670A	02
03	PA	HARBORCREEK, TOWNSHIP OF	4211440005B	19-JAN-2000	99-03-1838A	02
03	PA	HARMONY, BOROUGH OF	4202170001B	31-MAY-2000	99-03-097P	05
03	PA	HEREFORD, TOWNSHIP OF	42011C0441E	28-JAN-2000	00-03-0382A	02
03	PA	HOLLENBACK, TOWNSHIP OF	4218310005A	28-MAR-2000	00-03-0334A	02
03	PA	JACKSON, TOWNSHIP OF	4214200001A	31-MAY-2000	99-03-097P	05
03	PA	JOHNSTOWN, CITY OF	4202310010C	28-JAN-2000	99-03-1688A	02
03	PA	KENHORST, BOROUGH OF	412110C0512E	11-APR-2000	98-03-047P	.....
03	PA	KENHORST, BOROUGH OF	42011C0516E	11-APR-2000	98-03-047P	05
03	PA	LAPORTE, TOWNSHIP OF	422065 A	18-FEB-2000	00-03-0494A	02
03	PA	LOWER HEIDELBERG, TOWNSHIP OF	42011C0483E	04-APR-2000	99-03-133P	05
03	PA	LOWER MAKEFIELD, TOWNSHIP OF	42017C0344F	20-MAR-2000	00-11	02
03	PA	LOWER MERION, TOWNSHIP OF	42091C0432E	19-MAY-2000	00-03-0728A	02
03	PA	LOWER MOUNT BETHEL, TOWNSHIP OF	4207240010B	14-MAR-2000	00-03-0666A	02
03	PA	MANHEIM, TOWNSHIP OF	4205560010C	16-MAY-2000	00-03-1156A	02
03	PA	MATAMORAS, BOROUGH OF	4207580005A	04-APR-2000	00-03-0702A	02
03	PA	MATAMORAS, BOROUGH OF	4207580005A	12-JAN-2000	00-03-0094A	02
03	PA	MATAMORAS, BOROUGH OF	4207580005A	25-FEB-2000	00-03-0582A	02
03	PA	MATAMORAS, BOROUGH OF	4207580005A	25-FEB-2000	00-03-0584A	02
03	PA	MIDDLETOWN, TOWNSHIP OF	42017C0434F	08-MAR-2000	99-03-151P	05
03	PA	MIDDLETOWN, TOWNSHIP OF	42017C0442F	08-MAR-2000	99-03-151P	.....
03	PA	MIFFLINBURG, BOROUGHS OF	4208320001B	31-MAR-2000	99-03-1424A	01
03	PA	MONOGAHELA, CITY OF	4208560001B	07-FEB-2000	00-03	02
03	PA	MORTON, BOROUGH OF	42045C0034D	01-JUN-2000	00-03-1464A	02
03	PA	MOUNT UNION, BOROUGH OF	4204890001B	22-MAR-2000	99-03-113P	05
03	PA	MUHLENBERG, TOWNSHIP OF	42011C0366E	04-MAY-2000	00-03-1032A	02
03	PA	NEW BRITAIN, TOWNSHIP OF	42017C0286F	01-FEB-2000	99-03-1906A	02
03	PA	NEW BRITAIN, TOWNSHIP OF	42017C0288F	22-FEB-2000	00-03-0844A	02
03	PA	NEWLIN, TOWNSHIP OF	42029C0317D	09-MAY-2000	00-03-1002A	17
03	PA	NORTHAMPTON, TOWNSHIP OF	42017C0409F	02-FEB-2000	00-03-0324A	02
03	PA	NORTHAMPTON, TOWNSHIP OF	42017C0428F	01-JUN-2000	00-03-0882A	01
03	PA	PARADISE, TOWNSHIP OF	4218910005B	02-MAY-2000	00-03-0994A	02
03	PA	PAXTANG, BOROUGH OF	4203900001A	02-MAY-2000	00-03-0888A	02
03	PA	PENN HILLS, TOWNSHIP OF	42003C0383E	17-FEB-2000	00-03-0166A	02
03	PA	PENN, TOWNSHIP OF	42129C0382D	18-APR-2000	00-03-1136A	02
03	PA	PEQUEA, TOWNSHIP OF	4217790010A	28-MAR-2000	00-03-0658A	02
03	PA	PETERS, TOWNSHIP OF	4216540005C	13-APR-2000	00-03-0108A	02
03	PA	PHILADELPHIA, CITY OF	4207570186F	16-MAY-2000	00-03-1026A	02
03	PA	RADNOR, TOWNSHIP OF	42045C0009D	27-APR-2000	00-03-1060A	02
03	PA	RICHMOND, TOWNSHIP OF	42011C0360E	04-FEB-2000	00-03-0132A	02
03	PA	RICHMOND, TOWNSHIP OF	4208250020B	13-APR-2000	00-03-0710A	02
03	PA	RIDLEY, TOWNSHIP OF	42045C0046D	25-APR-2000	00-14	02
03	PA	SANDY LAKE, BOROUGH OF	4206770001B	18-APR-2000	00-03-0752A	02
03	PA	SANDY, TOWNSHIP OF	4211910015B	05-APR-2000	00-03-0732A	02
03	PA	SHREWSBURY, TOWNSHIP OF	4211480012B	18-FEB-2000	00-03-0126A	02
03	PA	SNYDERTOWN, CITY OF	4207420001B	09-FEB-2000	00-03-0008A	01
03	PA	SOUTH HEIDELBERG, TOWNSHIP OF	42011C0490E	10-FEB-2000	00-03-0872A	02
03	PA	SOUTH LEBANON, TOWNSHIP OF	4205810008C	13-JAN-2000	99-03-067P	05
03	PA	SPRINGFIELD, TOWNSHIP OF	42091C0377E	20-JAN-2000	00-03-0394A	02
03	PA	STATE COLLEGE, BOROUGH OF	4202600005D	14-MAR-2000	99-03-950A	02
03	PA	SWATARA, TOWNSHIP OF	4203980005B	24-MAY-2000	00-03-0692A	02
03	PA	UPPER FRANKFORD, TOWNSHIP OF	4215880010B	30-MAY-2000	00-03-0846A	02

Region	State	Community	Map panel	Determination date	Case No.	Type
03	PA	UPPER GWYNEDD, TOWNSHIP OF	42091C0257E	05-JAN-2000	00-03-0310A	02
03	PA	UPPER GWYNEDD, TOWNSHIP OF	42091C0257E	11-APR-2000	00-03-0894X	02
03	PA	UPPER UWCHLAN, TWP OF	42029C0181D	04-FEB-2000	00-03-0110A	02
03	PA	VALLEY, TOWNSHIP OF	42029C0301D	01-FEB-2000	99-03-195P	05
03	PA	VALLEY, TOWNSHIP OF	42029C0301D	18-APR-2000	00-03-1052A	02
03	PA	VENANGO, TOWNSHIP OF	4213710005A	25-APR-2000	00-03-0502A	02
03	PA	WARRINGTON, TOWNSHIP OF	42017C0382F	01-FEB-2000	00-03-035P	06
03	PA	WARWICK, TOWNSHIP OF	4217860003B	30-MAY-2000	00-03-1056A	02
03	PA	WAYNE, TOWNSHIP OF	4212400015A	22-MAR-2000	99-03-113P	05
03	PA	WILLISTOWN, TOWNSHIP OF	42029C0218D	18-FEB-2000	99-03-187P	05
03	PA	WRIGHT, TOWNSHIP OF	4206320003B	01-FEB-2000	00-03-017P	05
03	VA	ALBEMARLE COUNTY *	5100060075B	02-MAY-2000	00-03-0498A	02
03	VA	ALEXANDRIA, CITY OF	5155190005D	04-FEB-2000	00-03-0330A	02
03	VA	ARLINGTON COUNTY	5155200022B	02-MAY-2000	00-03-1232A	02
03	VA	BEDFORD COUNTY *	5100160025A	07-MAR-2000	00-03-0842A	02
03	VA	BEDFORD COUNTY *	5100160100A	05-MAY-2000	00-03-1182A	02
03	VA	BLAND COUNTY *	5100170055B	16-MAR-2000	00-03-0676A	02
03	VA	BRISTOL, CITY OF	5100220001B	01-JUN-2000	00-03-1312X	02
03	VA	BRISTOL, CITY OF	5100220001B	28-MAR-2000	99-03-1440A	17
03	VA	CHESAPEAKE, CITY OF	5100340004C	18-APR-2000	00-03-0720A	02
03	VA	CHESAPEAKE, CITY OF	5100340022C	03-MAR-2000	00-03-0678A	02
03	VA	CHESAPEAKE, CITY OF	5100340022C	04-APR-2000	00-03-1224X	02
03	VA	CHESAPEAKE, CITY OF	5100340022C	05-APR-2000	00-03-0028A	02
03	VA	CHESAPEAKE, CITY OF	5100340022C	05-APR-2000	00-03-0736A	02
03	VA	CHESAPEAKE, CITY OF	5100340022C	09-MAR-2000	00-03-0578A	02
03	VA	CHESAPEAKE, CITY OF	5100340022C	09-MAY-2000	00-03-1028A	02
03	VA	CHESAPEAKE, CITY OF	5100340022C	20-APR-2000	00-03-0866A	02
03	VA	CHESAPEAKE, CITY OF	5100340035C	16-MAY-2000	00-03-1270A	01
03	VA	CHESAPEAKE, CITY OF	5100340046C	10-FEB-2000	00-03-0338A	02
03	VA	CHESAPEAKE, CITY OF	5100340048C	14-JAN-2000	00-03-0592A	02
03	VA	CHESAPEAKE, CITY OF	5100340048C	18-MAY-2000	00-03-1296A	02
03	VA	CHESTERFIELD COUNTY *	5100350034B	22-MAY-2000	00-03-0762A	02
03	VA	COLONIAL HEIGHTS, CITY OF	5100390003C	20-APR-2000	00-03-1228A	02
03	VA	FAIRFAX COUNTY *	5155250025D	11-APR-2000	00-03-1274X	02
03	VA	FAIRFAX COUNTY *	5155250025D	12-JAN-2000	00-03-0654X	02
03	VA	FAIRFAX COUNTY *	5155250025D	14-MAR-2000	00-03-0998A	02
03	VA	FAIRFAX COUNTY *	5155250025D	21-MAR-2000	00-03-0674A	02
03	VA	FAIRFAX COUNTY *	5155250050D	23-MAY-2000	00-03-1392A	02
03	VA	FAIRFAX COUNTY *	5155250075D	04-APR-2000	00-03-1148A	02
03	VA	FAIRFAX COUNTY *	5155250075D	11-APR-2000	00-03-1272X	02
03	VA	FAIRFAX COUNTY *	5155250075D	13-APR-2000	00-03-1126A	02
03	VA	FAIRFAX COUNTY *	5155250075D	17-FEB-2000	00-03-0936X	02
03	VA	FAIRFAX COUNTY *	5155250075D	23-MAY-2000	00-03-1390A	02
03	VA	FAIRFAX COUNTY *	5155250075D	28-JAN-2000	00-03-0186A	02
03	VA	FAIRFAX COUNTY *	5155250087D	02-FEB-2000	00-03-0386A	02
03	VA	FAIRFAX COUNTY *	5155250100D	12-JAN-2000	00-03-0158A	02
03	VA	FAIRFAX COUNTY *	5155250100D	19-JAN-2000	00-03-0746X	02
03	VA	FAIRFAX COUNTY *	5155250100D	25-APR-2000	00-03-0510A	02
03	VA	FAIRFAX COUNTY *	5155250125D	18-MAY-2000	00-03-1030A	01
03	VA	FAIRFAX, CITY OF	5155240005B	11-APR-2000	00-03-0928A	02
03	VA	FAIRFAX, CITY OF	5155240005B	25-MAY-2000	00-03-1302A	02
03	VA	FALLS CHURCH, CITY OF	5100540001B	21-MAR-2000	00-03-0332A	02
03	VA	FRANKLIN COUNTY *	5100610100A	06-JAN-2000	99-03-1446A	02
03	VA	FRANKLIN COUNTY *	5100610100A	25-FEB-2000	00-09	02
03	VA	FRANKLIN COUNTY *	5100610205A	18-APR-2000	00-03-0778A	02
03	VA	FRANKLIN COUNTY *	5100610210A	25-MAY-2000	00-03-1146A	02
03	VA	FRANKLIN COUNTY *	5100610220A	04-MAY-2000	00-03-1252A	02
03	VA	FRANKLIN COUNTY *	5100610250A	30-MAY-2000	00-03-1186A	02
03	VA	FRONT ROYAL, TOWN OF	5101670002B	07-APR-2000	00-03-0864A	01
03	VA	FRONT ROYAL, TOWN OF	5101670002B	27-JAN-2000	99-03-007P	05
03	VA	HANOVER COUNTY *	5102370160A	18-FEB-2000	99-03-1162A	02
03	VA	HANOVER COUNTY *	5102370160A	22-FEB-2000	00-03-0586A	02
03	VA	HENRICO COUNTY *	5100770025B	02-MAY-2000	00-03-0384A	02
03	VA	HENRICO COUNTY *	5100770025B	05-JAN-2000	00-03-0374A	02
03	VA	HENRICO COUNTY *	5100770025B	05-JAN-2000	99-03-1772A	02
03	VA	HENRICO COUNTY *	5100770025B	18-MAY-2000	00-03-1192A	02
03	VA	HENRICO COUNTY *	5100770025B	23-MAR-2000	00-03-1160X	02
03	VA	HENRICO COUNTY *	5100770025B	24-MAY-2000	00-03-0862A	02
03	VA	HENRICO COUNTY *	5100770025B	25-FEB-2000	00-03-0376A	02
03	VA	HENRICO COUNTY *	5100770025B	30-MAR-2000	00-03-1134A	02
03	VA	HERNDON, TOWN OF	5100520001B	02-MAY-2000	00-03-1254A	02
03	VA	JAMES CITY COUNTY *	5102010045B	21-MAR-2000	00-03-0380A	02
03	VA	LEXINGTON, CITY OF	5100890001B	07-APR-2000	00-03-1122V	19

Region	State	Community	Map panel	Determination date	Case No.	Type
03	VA	LOUDOUN COUNTY *	5100900020C	20-APR-2000	00-03-0826A	02
03	VA	LOUDOUN COUNTY *	5100900110C	05-JAN-2000	00-03-0372A	02
03	VA	LOUDOUN COUNTY *	5100900110C	14-JAN-2000	00-03-009P	05
03	VA	LOUDOUN COUNTY *	5100900175C	06-APR-2000	00-03-0302A	02
03	VA	LOUISA COUNTY *	51109C0125B	07-FEB-2000	00-03-0608A	02
03	VA	LOUISA COUNTY *	51109C0125B	07-MAR-2000	00-10	02
03	VA	LOUISA COUNTY *	51109C0125B	28-JAN-2000	00-03-0026A	02
03	VA	LOUISA COUNTY *	51109C0375B	04-APR-2000	00-03-0718A	02
03	VA	LURAY, TOWN OF	5101100002C	16-MAR-2000	00-03-0594A	02
03	VA	MANASSAS, CITY OF	51153C0113D	21-MAR-2000	00-03-0392A	02
03	VA	MECKLENBURG COUNTY *	5101890200A	31-MAR-2000	99-03-1466A	02
03	VA	NEWPORT NEWS, CITY OF	5101030010C	06-APR-2000	00-03-1194A	02
03	VA	NORTHUMBERLAND COUNTY *	5101070010C	27-APR-2000	00-03-1064A	02
03	VA	ORANGE COUNTY *	5102030020B	18-MAY-2000	00-03-1284A	02
03	VA	PORTSMOUTH, CITY OF	5155290025B	19-JAN-2000	00-03-0308A	02
03	VA	PRINCE GEORGE COUNTY *	5102040025A	16-MAR-2000	99-03-1836A	02
03	VA	PRINCE WILLIAM COUNTY *	51153C0025D	07-MAR-2000	00-03-0634A	02
03	VA	PRINCE WILLIAM COUNTY *	51153C0060D	28-JAN-2000	00-03-0626A	02
03	VA	PRINCE WILLIAM COUNTY *	51153C0060D	28-JAN-2000	00-03-0628A	02
03	VA	PRINCE WILLIAM COUNTY *	51153C0060D	28-JAN-2000	00-03-0630A	02
03	VA	PRINCE WILLIAM COUNTY *	51153C0060D	30-MAR-2000	00-03-0632A	02
03	VA	PRINCE WILLIAM COUNTY *	51153C0066D	28-MAR-2000	00-03-0618A	02
03	VA	PRINCE WILLIAM COUNTY *	51153C0066D	28-MAR-2000	00-03-0620A	02
03	VA	PRINCE WILLIAM COUNTY *	51153C0080D	30-MAY-2000	00-03-0804A	02
03	VA	PRINCE WILLIAM COUNTY *	51153C0080D	30-MAY-2000	00-03-0806A	02
03	VA	PRINCE WILLIAM COUNTY *	51153C0088D	04-APR-2000	00-03-0980A	02
03	VA	PRINCE WILLIAM COUNTY *	51153C0088D	15-MAR-2000	00-03-0958A	02
03	VA	PRINCE WILLIAM COUNTY *	51153C0089D	11-APR-2000	00-03-0548A	02
03	VA	PRINCE WILLIAM COUNTY *	51153C0089D	16-MAR-2000	00-03-0954A	02
03	VA	PRINCE WILLIAM COUNTY *	51153C0089D	28-MAR-2000	00-03-0956A	02
03	VA	PRINCE WILLIAM COUNTY *	51153C0111D	02-MAR-2000	00-03-0938A	02
03	VA	PRINCE WILLIAM COUNTY *	51153C0111D	04-APR-2000	00-03-0968A	02
03	VA	PRINCE WILLIAM COUNTY *	51153C0111D	04-APR-2000	00-03-0970A	02
03	VA	PRINCE WILLIAM COUNTY *	51153C0111D	14-MAR-2000	00-03-0966A	02
03	VA	PRINCE WILLIAM COUNTY *	51153C0111D	16-MAR-2000	00-03-0976A	02
03	VA	PRINCE WILLIAM COUNTY *	51153C0111D	23-MAY-2000	00-03-0974A	02
03	VA	PRINCE WILLIAM COUNTY *	51153C0111D	28-MAR-2000	00-03-0978A	02
03	VA	PRINCE WILLIAM COUNTY *	51153C0111D	29-FEB-2000	00-03-0940A	02
03	VA	PRINCE WILLIAM COUNTY *	51153C0111D	29-FEB-2000	00-03-0964A	02
03	VA	PRINCE WILLIAM COUNTY *	51153C0111D	30-MAY-2000	00-03-0972A	02
03	VA	PRINCE WILLIAM COUNTY *	51153C0112D	03-JAN-2000	00-03-0198A	02
03	VA	PRINCE WILLIAM COUNTY *	51153C0112D	19-JAN-2000	00-03-0202A	02
03	VA	PRINCE WILLIAM COUNTY *	51153C0112D	29-FEB-2000	00-03-0948A	02
03	VA	PRINCE WILLIAM COUNTY *	51153C0112D	29-FEB-2000	00-03-0950A	02
03	VA	PRINCE WILLIAM COUNTY *	51153C0112D	29-FEB-2000	00-03-0952A	02
03	VA	PRINCE WILLIAM COUNTY *	51153C0113D	29-FEB-2000	00-03-0942A	02
03	VA	PRINCE WILLIAM COUNTY *	51153C0113D	29-FEB-2000	00-03-0944A	02
03	VA	PRINCE WILLIAM COUNTY *	51153C0113D	29-FEB-2000	00-03-0946A	02
03	VA	PRINCE WILLIAM COUNTY *	51153C0150D	24-FEB-2000	00-03-0638A	02
03	VA	PRINCE WILLIAM COUNTY *	51153C0154D	27-APR-2000	00-03-1096A	02
03	VA	PRINCE WILLIAM COUNTY *	51153C0155D	23-MAY-2000	00-03-0636A	02
03	VA	PRINCE WILLIAM COUNTY *	51153C0157D	25-APR-2000	00-03-0792A	02
03	VA	PRINCE WILLIAM COUNTY *	51153C0157D	25-APR-2000	00-03-0794A	02
03	VA	PRINCE WILLIAM COUNTY *	51153C0165D	24-FEB-2000	00-03-0640A	02
03	VA	PRINCE WILLIAM COUNTY *	51153C0165D	24-FEB-2000	00-03-0642A	02
03	VA	PRINCE WILLIAM COUNTY *	51153C0165D	24-FEB-2000	00-03-0644A	02
03	VA	PRINCE WILLIAM COUNTY *	51153C0170D	11-MAY-2000	00-03-0798A	02
03	VA	PRINCE WILLIAM COUNTY *	51153C0170D	11-MAY-2000	00-03-0802A	02
03	VA	PRINCE WILLIAM COUNTY *	51153C0170D	24-FEB-2000	00-03-0646A	02
03	VA	PRINCE WILLIAM COUNTY *	51153C0170D	24-FEB-2000	00-03-0648A	02
03	VA	PRINCE WILLIAM COUNTY *	51153C0170D	30-MAY-2000	00-03-0808A	02
03	VA	PRINCE WILLIAM COUNTY *	51153C0179D	04-APR-2000	00-03-1108A	02
03	VA	PRINCE WILLIAM COUNTY *	51153C0179D	04-APR-2000	00-03-1114A	02
03	VA	PRINCE WILLIAM COUNTY *	51153C0179D	18-MAY-2000	00-03-1112A	02
03	VA	PRINCE WILLIAM COUNTY *	51153C0187D	02-FEB-2000	00-03-0550A	02
03	VA	PRINCE WILLIAM COUNTY *	51153C0191D	11-APR-2000	00-03-0552A	02
03	VA	PRINCE WILLIAM COUNTY *	51153C0191D	11-APR-2000	00-03-0554A	02
03	VA	PRINCE WILLIAM COUNTY *	51153C0191D	11-APR-2000	00-03-0556A	02
03	VA	PRINCE WILLIAM COUNTY *	51153C0191D	18-APR-2000	00-03-0962A	02
03	VA	PRINCE WILLIAM COUNTY *	51153C0191D	25-APR-2000	00-03-0512A	02
03	VA	PRINCE WILLIAM COUNTY *	51153C0191D	25-APR-2000	00-03-0516A	02
03	VA	PRINCE WILLIAM COUNTY *	51153C0191D	25-APR-2000	00-03-0518A	02
03	VA	PRINCE WILLIAM COUNTY *	51153C0191D	25-APR-2000	00-03-0520A	02

Region	State	Community	Map panel	Determination date	Case No.	Type
03	VA	PRINCE WILLIAM COUNTY *	51153C0191D	25-APR-2000	00-03-0522A	02
03	VA	PRINCE WILLIAM COUNTY *	51153C0191D	25-APR-2000	00-03-0524A	02
03	VA	PRINCE WILLIAM COUNTY *	51153C0191D	25-APR-2000	00-03-0526A	02
03	VA	PRINCE WILLIAM COUNTY *	51153C0191D	25-APR-2000	00-03-0528A	02
03	VA	PRINCE WILLIAM COUNTY *	51153C0191D	25-APR-2000	00-03-0530A	02
03	VA	PRINCE WILLIAM COUNTY *	51153C0193D	18-APR-2000	00-03-0614A	02
03	VA	PRINCE WILLIAM COUNTY *	51153C0194D	05-JAN-2000	00-03-0210A	02
03	VA	PRINCE WILLIAM COUNTY *	51153C0194D	05-JAN-2000	00-03-0214A	02
03	VA	PRINCE WILLIAM COUNTY *	51153C0194D	11-APR-2000	00-03-0534A	02
03	VA	PRINCE WILLIAM COUNTY *	51153C0194D	13-APR-2000	00-03-0532A	02
03	VA	PRINCE WILLIAM COUNTY *	51153C0194D	28-JAN-2000	00-03-0478A	02
03	VA	PRINCE WILLIAM COUNTY *	51153C0194D	30-MAR-2000	00-03-0610A	02
03	VA	PRINCE WILLIAM COUNTY *	51153C0201D	29-FEB-2000	00-03-0960A	02
03	VA	PRINCE WILLIAM COUNTY *	51153C0204D	02-MAR-2000	00-03-0460A	02
03	VA	PRINCE WILLIAM COUNTY *	51153C0204D	16-FEB-2000	00-03-0448A	02
03	VA	PRINCE WILLIAM COUNTY *	51153C0204D	24-FEB-2000	00-03-0446A	02
03	VA	PRINCE WILLIAM COUNTY *	51153C0204D	24-FEB-2000	00-03-0454A	02
03	VA	PRINCE WILLIAM COUNTY *	51153C0204D	24-FEB-2000	00-03-0456A	02
03	VA	PRINCE WILLIAM COUNTY *	51153C0204D	29-FEB-2000	00-03-0438A	02
03	VA	PRINCE WILLIAM COUNTY *	51153C0204D	29-FEB-2000	00-03-0444A	02
03	VA	PRINCE WILLIAM COUNTY *	51153C0204D	29-FEB-2000	00-03-0450A	02
03	VA	PRINCE WILLIAM COUNTY *	51153C0204D	29-FEB-2000	00-03-0458A	02
03	VA	PRINCE WILLIAM COUNTY *	51153C0212D	03-JAN-2000	00-03-0194A	02
03	VA	PRINCE WILLIAM COUNTY *	51153C0212D	03-JAN-2000	00-03-0288A	02
03	VA	PRINCE WILLIAM COUNTY *	51153C0212D	03-JAN-2000	00-03-0656X	02
03	VA	PRINCE WILLIAM COUNTY *	51153C0212D	05-JAN-2000	00-03-0292A	02
03	VA	PRINCE WILLIAM COUNTY *	51153C0212D	12-JAN-2000	00-03-0230A	02
03	VA	PRINCE WILLIAM COUNTY *	51153C0212D	12-JAN-2000	00-03-0232A	02
03	VA	PRINCE WILLIAM COUNTY *	51153C0212D	12-JAN-2000	00-03-0234A	02
03	VA	PRINCE WILLIAM COUNTY *	51153C0212D	12-JAN-2000	00-03-0236A	02
03	VA	PRINCE WILLIAM COUNTY *	51153C0212D	15-MAR-2000	00-03-0788A	02
03	VA	PRINCE WILLIAM COUNTY *	51153C0212D	21-MAR-2000	00-03-0786A	02
03	VA	PRINCE WILLIAM COUNTY *	51153C0212D	23-MAR-2000	00-03-0790A	02
03	VA	PRINCE WILLIAM COUNTY *	51153C0214D	04-FEB-2000	00-03-0462A	02
03	VA	PRINCE WILLIAM COUNTY *	51153C0214D	04-FEB-2000	00-03-0464A	02
03	VA	PRINCE WILLIAM COUNTY *	51153C0214D	04-FEB-2000	00-03-0466A	02
03	VA	PRINCE WILLIAM COUNTY *	51153C0214D	04-FEB-2000	00-03-0468A	02
03	VA	PRINCE WILLIAM COUNTY *	51153C0214D	04-FEB-2000	00-03-0470A	02
03	VA	PRINCE WILLIAM COUNTY *	51153C0214D	04-FEB-2000	00-03-0472A	02
03	VA	PRINCE WILLIAM COUNTY *	51153C0214D	04-FEB-2000	00-03-0474A	02
03	VA	PRINCE WILLIAM COUNTY *	51153C0216D	05-JAN-2000	00-03-0294A	02
03	VA	PRINCE WILLIAM COUNTY *	51153C0216D	12-JAN-2000	00-03-0296A	02
03	VA	PRINCE WILLIAM COUNTY *	51153C0216D	12-JAN-2000	00-03-0298A	02
03	VA	PRINCE WILLIAM COUNTY *	51153C0216D	30-MAR-2000	00-03-0612A	02
03	VA	PRINCE WILLIAM COUNTY *	51153C0217D	04-APR-2000	00-03-1116A	02
03	VA	PRINCE WILLIAM COUNTY *	51153C0238D	13-APR-2000	00-03-1098A	02
03	VA	PRINCE WILLIAM COUNTY *	51153C0238D	25-APR-2000	00-03-1196A	02
03	VA	PULASKI COUNTY *	5101250100B	02-FEB-2000	00-03-0114A	02
03	VA	PULASKI COUNTY *	5101250100B	07-MAR-2000	00-03-1058X	02
03	VA	ROANOKE COUNTY *	51161C0029D	15-MAR-2000	00-03-0688A	01
03	VA	ROANOKE COUNTY *	51161C0039E	23-MAR-2000	00-03-0726A	02
03	VA	ROANOKE, CITY OF	51161C0023D	16-MAY-2000	00-03-0890A	02
03	VA	SALEM, CITY OF	51161C0037D	18-FEB-2000	99-03-1608A	01
03	VA	SALEM, CITY OF	51161C0037D	30-MAR-2000	99-03-1492A	01
03	VA	SMITHFIELD, TOWN OF	5100810005C	05-APR-2000	00-03-0992A	02
03	VA	SMITHFIELD, TOWN OF	5100810005C	05-JAN-2000	99-03-1568A	02
03	VA	SPOTSYLVANIA COUNTY*	5103080050C	21-MAR-2000	00-03-1054A	02
03	VA	SPOTSYLVANIA COUNTY*	5103080225C	02-MAR-2000	00-03-0340A	02
03	VA	SPOTSYLVANIA COUNTY*	5103080275C	21-MAR-2000	00-03-0858A	02
03	VA	STAFFORD COUNTY *	5101540130B	08-MAR-2000	99-03-117P	05
03	VA	STAFFORD COUNTY *	5101540135D	14-MAR-2000	00-03-0916A	02
03	VA	STAFFORD COUNTY *	5101540165B	08-FEB-2000	00-03-0304A	02
03	VA	STAFFORD COUNTY *	5101540250B	03-MAR-2000	00-03-0508A	02
03	VA	VIRGINIA BEACH, CITY OF	5155310021E	28-JAN-2000	00-03-0748X	02
03	VA	VIRGINIA BEACH, CITY OF	5155310029E	02-FEB-2000	99-03-1646A	02
03	VA	VIRGINIA BEACH, CITY OF	5155310048E	20-APR-2000	00-03-1286A	01
03	VA	VIRGINIA BEACH, CITY OF	5155310059E	24-FEB-2000	00-03-0482A	02
03	VA	WINCHESTER, CITY OF	5101730005B	02-FEB-2000	99-03-177P	06
03	VA	YORK COUNTY *	5101820043B	04-APR-2000	00-03-0010A	02
03	VA	YORK COUNTY *	5101820043B	04-APR-2000	00-03-0098A	02
03	WV	BERKELEY COUNTY *	5402820083C	09-MAY-2000	00-03-1298A	02
03	WV	CABELL COUNTY*	5400160025A	18-MAY-2000	00-03-1172A	02
03	WV	CHARLESTON, CITY OF	5400730004C	08-MAR-2000	99-03-1792A	02

Region	State	Community	Map panel	Determination date	Case No.	Type
03	WV	CHARLESTON, CITY OF	5400730004C	12-APR-2000	00-03-0738A	02
03	WV	ELEANOR, TOWN OF	540222 B	11-APR-2000	00-03-0896X	02
03	WV	ELEANOR, TOWN OF	540222 B	12-JAN-2000	00-03-0112A	02
03	WV	GARY, CITY OF	5401170001B	28-JAN-2000	00-03-0596A	02
03	WV	GILMER COUNTY *	54021C0080B	28-JAN-2000	00-03-0150A	02
03	WV	GLENVILLE, CITY OF	54021C0078B	16-MAY-2000	00-03-1244A	01
03	WV	HARRISON COUNTY*	5400530059B	02-MAY-2000	00-03-1130A	02
03	WV	HENDRICKS,TOWN OF	54093C0084D	07-FEB-2000	00-07	02
03	WV	HUNTINGTON, CITY OF	5400180006C	20-APR-2000	00-03-0668A	02
03	WV	JEFFERSON COUNTY *	5400650066B	07-MAR-2000	00-03-0910A	02
03	WV	LEWIS COUNTY*	5400850079C	11-MAY-2000	00-03-1326A	02
03	WV	MASON COUNTY *	5401120245A	29-MAR-2000	00-03-0378A	02
03	WV	MCDOWELL COUNTY *	5401140065B	28-MAR-2000	00-03-0484A	02
03	WV	MERCER COUNTY*	5401240114C	25-APR-2000	00-03-0562A	02
03	WV	MONONGALIA COUNTY *	5401390045B	11-MAY-2000	00-03-1354A	02
03	WV	MORGANTOWN, CITY OF	5401410001D	18-FEB-2000	00-03-0840X	02
03	WV	PENDELTON COUNTY*	5401530025C	07-APR-2000	00-03-1142A	02
03	WV	PRINCETON, CITY OF	5401280002C	04-APR-2000	00-03-0870A	01
03	WV	PUTNAM COUNTY*	5401640115A	25-APR-2000	00-03-0908A	02
03	WV	RALEIGH COUNTY *	5401690025B	23-MAR-2000	00-03-0558A	02
03	WV	WAYNE COUNTY*	5402000106B	05-JAN-2000	00-03-0600A	02
03	WV	WAYNE COUNTY*	5402000111B	21-MAR-2000	00-03-1036A	02
03	WV	WELCH, CITY OF	5401230001B	07-MAR-2000	00-03-0390A	02
03	WV	WETZEL COUNTY *	5402070035A	31-MAR-2000	00-03-0686A	02
03	WV	WETZEL COUNTY *	5402070070A	27-APR-2000	00-03-1154A	02
03	WV	WHEELING, CITY OF	5401520015D	02-MAY-2000	00-03-1248A	02
03	WV	WOOD COUNTY *	5402130046B	19-MAY-2000	00-03-0854A	02
04	AL	ANNISTON, CITY OF	0100200001C	11-JAN-2000	99-04-6210A	02
04	AL	ANNISTON, CITY OF	0100200001C	16-MAY-2000	00-04-2788A	17
04	AL	AUTAUGA COUNTY *	0103140040B	24-FEB-2000	00-04-1232A	02
04	AL	BIRMINGHAM, CITY OF	01073C0486E	06-JAN-2000	00-04-0610A	01
04	AL	COLBERT COUNTY	0103180025B	18-MAY-2000	99-04-273P	05
04	AL	COLBERT COUNTY	0103180125B	03-FEB-2000	00-04-0258A	02
04	AL	COLBERT COUNTY	0103180125B	15-FEB-2000	00-04-1528A	02
04	AL	DALE COUNTY *	0100600175B	07-MAR-2000	00-04-1592A	02
04	AL	DALE COUNTY *	0100600175B	13-APR-2000	00-04-1826A	02
04	AL	DECATUR, CITY OF	01103C0060D	01-JUN-2000	00-04-3318A	02
04	AL	DECATUR, CITY OF	01103C0060D	01-MAY-2000	99-04-165P	05
04	AL	DECATUR, CITY OF	01103C0060D	04-FEB-2000	99-04-5708A	02
04	AL	DECATUR, CITY OF	01103C0060D	08-FEB-2000	00-04-1006A	02
04	AL	DECATUR, CITY OF	01103C0060D	20-APR-2000	00-04-2284A	02
04	AL	DECATUR, CITY OF	01103C0070D	01-MAY-2000	99-04-165P	.....
04	AL	DECATUR, CITY OF	01103C0070D	09-MAR-2000	00-04-1864A	02
04	AL	DECATUR, CITY OF	01103C0080D	01-MAY-2000	99-04-165P	.....
04	AL	DECATUR, CITY OF	01103C0080D	09-MAY-2000	00-04-2556A	02
04	AL	DECATUR, CITY OF	01103C0080D	22-FEB-2000	00-04-1540A	02
04	AL	DECATUR, CITY OF	01103C0080D	24-FEB-2000	00-04-1746A	02
04	AL	DECATUR, CITY OF	01103C0090D	02-MAY-2000	00-04-1164A	02
04	AL	ELMORE COUNTY*	0104060025B	04-MAY-2000	00-04-2366A	02
04	AL	ELMORE COUNTY*	0104060100B	01-JUN-2000	00-04-3038A	02
04	AL	HUEYTOWN, CITY OF	01073C0461E	01-JUN-2000	00-04-3236A	02
04	AL	HUEYTOWN, CITY OF	01073C0461E	04-JAN-2000	00-04-0900A	02
04	AL	HUNTSVILLE, CITY OF	01089C0328D	17-FEB-2000	00-04-1454A	01
04	AL	HUNTSVILLE, CITY OF	01089C0331D	27-JAN-2000	00-04-0680A	02
04	AL	HUNTSVILLE, CITY OF	01089C0340D	18-MAY-2000	00-04-2884A	01
04	AL	HUNTSVILLE, CITY OF	01089C0341D	10-FEB-2000	99-04-4018A	01
04	AL	HUNTSVILLE, CITY OF	01089C0341D	22-FEB-2000	00-04-1396A	02
04	AL	HUNTSVILLE, CITY OF	01089C0362D	23-MAY-2000	00-04-2806A	01
04	AL	JEFFERSON COUNTY *	01073C0183F	14-JAN-2000	00-04-0768A	01
04	AL	JEFFERSON COUNTY *	01073C0194E	11-MAY-2000	00-04-2160A	02
04	AL	JEFFERSON COUNTY *	01073C0194E	12-JAN-2000	00-04-0770A	02
04	AL	JEFFERSON COUNTY *	01073C0484E	18-MAY-2000	00-04-1804A	02
04	AL	JEFFERSON COUNTY *	01073C0491E	09-MAY-2000	00-04-2660A	02
04	AL	JEFFERSON COUNTY *	01073C0492E	09-MAY-2000	00-04-2784A	17
04	AL	LANETT, CITY OF	0100290010B	01-FEB-2000	00-04-1300A	02
04	AL	LANETT, CITY OF	0100290010B	09-MAR-2000	00-04-1212A	02
04	AL	LANETT, CITY OF	0100290010B	16-MAR-2000	00-04-1216A	02
04	AL	LEEDS, CITY OF	01073C0366E	16-FEB-2000	00-04-1740X	01
04	AL	MADISON, CITY OF	01089C0284D	14-MAR-2000	99-04-4344A	01
04	AL	MOBILE COUNTY*	01097C0200J	20-APR-2000	00-04-2286A	02
04	AL	MOBILE COUNTY*	01097C0432J	14-MAR-2000	00-04-1888A	02
04	AL	MOBILE COUNTY*	01097C0778J	18-APR-2000	00-04-1516A	02
04	AL	MOBILE, CITY OF	01097C0541J	08-FEB-2000	00-04-1480A	17

Region	State	Community	Map panel	Determination date	Case No.	Type
04	AL	MONTGOMERY COUNTY *	01101C0070F	10-FEB-2000	00-04-1296A	02
04	AL	MONTGOMERY, CITY OF	01101C0070F	01-JUN-2000	00-04-2032A	01
04	AL	MONTGOMERY, CITY OF	01101C0070F	14-MAR-2000	00-04-1984A	02
04	AL	MONTGOMERY, CITY OF	01101C0135F	28-MAR-2000	00-04-1948A	02
04	AL	MOULTON, CITY OF	0101420002B	11-JAN-2000	00-04-0744A	02
04	AL	PELHAM, TOWN OF	0101930001B	14-MAR-2000	00-04-1290A	02
04	AL	PLEASANT GROVE, CITY OF	01073C0451E	19-JAN-2000	00-04-0282A	02
04	AL	SARALAND, CITY OF	01097C0429J	04-MAY-2000	00-04-2964A	02
04	AL	SHELBY COUNTY*	0101910025B	01-FEB-2000	00-04-0988A	02
04	AL	SHELBY COUNTY*	0101910045B	11-MAY-2000	00-04-1704A	01
04	AL	SHELBY COUNTY*	0101910050B	16-MAR-2000	00-04-2486A	01
04	AL	SHELBY COUNTY*	0101910065B	22-FEB-2000	00-04-1398A	02
04	AL	ST. CLAIR COUNTY *	0102900200B	13-JAN-2000	99-04-5170A	02
04	AL	TALLADEGA COUNTY *	0102970050B	01-FEB-2000	00-04-1018A	02
04	AL	TALLADEGA COUNTY *	0102970050B	01-JUN-2000	00-04-2324A	02
04	AL	TALLADEGA COUNTY *	0102970125B	18-MAY-2000	00-04-2094A	02
04	AL	TALLADEGA COUNTY *	0102970200B	06-APR-2000	00-04-1866A	02
04	AL	TALLADEGA COUNTY *	0102970200B	13-APR-2000	00-04-2144A	02
04	AL	TALLADEGA COUNTY *	0102970200B	17-FEB-2000	00-04-1538A	02
04	AL	TUSCALOOSA, CITY OF	0102030040A	25-APR-2000	00-04-1478A	02
04	AL	TUSCALOOSA, CITY OF	0102030065B	22-FEB-2000	00-04-1260A	02
04	AL	TUSCUMBIA, CITY OF	0100490002B	18-MAY-2000	99-04-273P	05
04	AL	WALKER COUNTY *	0103010055B	01-JUN-2000	00-04-1378A	02
04	AL	WALKER COUNTY *	0103010055B	29-FEB-2000	00-04-2068A	02
04	AL	WINSTON COUNTY *	0103040009B	01-FEB-2000	00-04-1698A	02
04	FL	ALACHUA COUNTY*	1200010269A	20-JAN-2000	99-04-5830A	02
04	FL	ALACHUA, CITY OF	1206640025A	09-FEB-2000	98-04-341P	05
04	FL	ALTAMONTE SPRINGS, CITY OF	12117C0120E	18-APR-2000	99-04-5952A	01
04	FL	BAY COUNTY*	1200040220D	24-FEB-2000	00-04-1812A	02
04	FL	BOCA RATON, CITY OF	1201950007C	11-JAN-2000	00-04-1124A	02
04	FL	BOCA RATON, CITY OF	1201950007C	20-APR-2000	99-04-6282A	02
04	FL	BRADFORD COUNTY *	12007C0245D	15-MAR-2000	00-04-1790X	02
04	FL	BREVARD COUNTY *	12009C0270E	01-JUN-2000	00-04-3692A	02
04	FL	BREVARD COUNTY *	12009C0270E	24-MAR-2000	00-04-1922A	02
04	FL	BREVARD COUNTY *	12009C0275E	01-FEB-2000	00-04-1442A	02
04	FL	BREVARD COUNTY *	12009C0275E	27-JAN-2000	99-04-5934A	01
04	FL	BREVARD COUNTY *	12009C0365E	06-JAN-2000	00-04-0808A	02
04	FL	BREVARD COUNTY *	12009C0365E	09-MAY-2000	00-04-2952A	02
04	FL	BREVARD COUNTY *	12009C0365E	16-MAY-2000	00-04-2268A	02
04	FL	BREVARD COUNTY *	12009C0430E	02-MAY-2000	00-04-1180A	01
04	FL	BREVARD COUNTY *	12009C0430E	20-JAN-2000	00-04-0936A	02
04	FL	BREVARD COUNTY *	12009C0435E	11-JAN-2000	00-04-0910A	02
04	FL	BREVARD COUNTY *	12009C0435E	20-JAN-2000	00-04-1230A	02
04	FL	BREVARD COUNTY *	12009C0435E	23-MAY-2000	00-04-2946A	02
04	FL	BREVARD COUNTY *	12009C0441F	01-JUN-2000	00-04-1198A	01
04	FL	BREVARD COUNTY *	12009C0441F	18-JAN-2000	00-04-0876A	01
04	FL	BREVARD COUNTY *	12009C0441F	18-MAY-2000	00-04-1194A	01
04	FL	BREVARD COUNTY *	12009C0441F	30-MAR-2000	00-04-0446A	01
04	FL	BREVARD COUNTY *	12009C0615E	04-APR-2000	00-04-2028A	02
04	FL	BREVARD COUNTY *	12009C0636E	12-APR-2000	99-04-6178A	02
04	FL	BROWARD COUNTY*	12011C0190F	22-FEB-2000	00-04-1386A	01
04	FL	BROWARD COUNTY*	12011C0190F	22-FEB-2000	00-04-1750A	01
04	FL	BROWARD COUNTY*	12011C0190F	23-MAY-2000	00-04-3018A	01
04	FL	BROWARD COUNTY*	12011C0190F	25-APR-2000	00-04-2504A	01
04	FL	BROWARD COUNTY*	12011C0190F	27-JAN-2000	00-04-1074A	01
04	FL	BROWARD COUNTY*	12011C0302F	18-MAY-2000	00-04-2758A	01
04	FL	BROWARD COUNTY*	12011C0302F	20-APR-2000	99-04-179P	05
04	FL	CAPE CORAL, CITY OF	1250950005C	04-JAN-2000	00-04-0714A	01
04	FL	CAPE CORAL, CITY OF	1250950020C	04-JAN-2000	00-04-0716A	01
04	FL	CAPE CORAL, CITY OF	1250950020C	18-JAN-2000	00-04-1112A	01
04	FL	CAPE CORAL, CITY OF	1250950020C	22-FEB-2000	00-04-1572A	01
04	FL	CAPE CORAL, CITY OF	1250950020C	22-FEB-2000	00-04-1700A	01
04	FL	CAPE CORAL, CITY OF	1250950020C	27-APR-2000	00-04-1942A	01
04	FL	CAPE CORAL, CITY OF	1250950020C	28-MAR-2000	00-04-2222A	01
04	FL	CAPE CORAL, CITY OF	1250950030C	01-FEB-2000	00-04-1274A	01
04	FL	CAPE CORAL, CITY OF	1250950030C	03-FEB-2000	00-04-1276A	01
04	FL	CAPE CORAL, CITY OF	1250950030C	04-JAN-2000	00-04-0514A	01
04	FL	CAPE CORAL, CITY OF	1250950030C	04-JAN-2000	00-04-0684A	01
04	FL	CAPE CORAL, CITY OF	1250950030C	07-MAR-2000	00-04-1768A	01
04	FL	CAPE CORAL, CITY OF	1250950030C	07-MAR-2000	00-04-1770A	01
04	FL	CAPE CORAL, CITY OF	1250950030C	07-MAR-2000	00-04-1772A	01
04	FL	CAPE CORAL, CITY OF	1250950030C	09-MAY-2000	00-04-2740A	01
04	FL	CAPE CORAL, CITY OF	1250950030C	11-APR-2000	00-04-2190A	01

Region	State	Community	Map panel	Determination date	Case No.	Type
04	FL	CAPE CORAL, CITY OF	1250950030C	13-JAN-2000	00-04-0964A	01
04	FL	CAPE CORAL, CITY OF	1250950030C	14-MAR-2000	00-04-1840A	01
04	FL	CAPE CORAL, CITY OF	1250950030C	14-MAR-2000	00-04-1940A	01
04	FL	CAPE CORAL, CITY OF	1250950030C	15-FEB-2000	00-04-1420A	01
04	FL	CAPE CORAL, CITY OF	1250950030C	15-FEB-2000	00-04-1570A	01
04	FL	CAPE CORAL, CITY OF	1250950030C	16-MAY-2000	00-04-2742A	01
04	FL	CAPE CORAL, CITY OF	1250950030C	18-APR-2000	00-04-2186A	01
04	FL	CAPE CORAL, CITY OF	1250950030C	18-JAN-2000	00-04-1048A	01
04	FL	CAPE CORAL, CITY OF	1250950030C	18-JAN-2000	00-04-1050A	01
04	FL	CAPE CORAL, CITY OF	1250950030C	18-JAN-2000	00-04-1052A	01
04	FL	CAPE CORAL, CITY OF	1250950030C	18-MAY-2000	00-04-2824A	01
04	FL	CAPE CORAL, CITY OF	1250950030C	18-MAY-2000	00-04-2834A	01
04	FL	CAPE CORAL, CITY OF	1250950030C	20-APR-2000	00-04-2340A	01
04	FL	CAPE CORAL, CITY OF	1250950030C	23-MAR-2000	00-04-1944A	01
04	FL	CAPE CORAL, CITY OF	1250950030C	23-MAR-2000	00-04-2044A	01
04	FL	CAPE CORAL, CITY OF	1250950030C	23-MAR-2000	00-04-2046A	01
04	FL	CAPE CORAL, CITY OF	1250950030C	27-JAN-2000	00-04-1126A	01
04	FL	CAPE CORAL, CITY OF	1250950030C	27-JAN-2000	00-04-1244A	01
04	FL	CAPE CORAL, CITY OF	1250950030C	27-JAN-2000	00-04-1272A	01
04	FL	CAPE CORAL, CITY OF	1250950030C	28-MAR-2000	00-04-2226A	01
04	FL	CAPE CORAL, CITY OF	1250950030C	30-MAR-2000	00-04-1838A	01
04	FL	CAPE CORAL, CITY OF	1250950035C	09-MAY-2000	00-04-2636A	01
04	FL	CAPE CORAL, CITY OF	1250950035C	11-APR-2000	00-04-2188A	01
04	FL	CAPE CORAL, CITY OF	1250950035C	13-JAN-2000	00-04-0966A	01
04	FL	CAPE CORAL, CITY OF	1250950035C	25-MAY-2000	00-04-3174A	01
04	FL	CAPE CORAL, CITY OF	1250950035C	28-MAR-2000	00-04-2194A	01
04	FL	CAPE CORAL, CITY OF	1250950035C	28-MAR-2000	00-04-2224A	01
04	FL	CAPE CORAL, CITY OF	1250950040C	01-FEB-2000	00-04-1146A	01
04	FL	CAPE CORAL, CITY OF	1250950040C	01-JUN-2000	00-04-3044A	01
04	FL	CAPE CORAL, CITY OF	1250950040C	03-FEB-2000	00-04-1312A	01
04	FL	CAPE CORAL, CITY OF	1250950040C	04-JAN-2000	00-04-0800A	01
04	FL	CAPE CORAL, CITY OF	1250950040C	13-JAN-2000	00-04-0860A	01
04	FL	CAPE CORAL, CITY OF	1250950040C	13-JAN-2000	00-04-0862A	01
04	FL	CAPE CORAL, CITY OF	1250950040C	16-MAY-2000	00-04-2744A	01
04	FL	CAPE CORAL, CITY OF	1250950040C	18-MAY-2000	00-04-2878A	01
04	FL	CAPE CORAL, CITY OF	1250950040C	25-APR-2000	00-04-2338A	01
04	FL	CAPE CORAL, CITY OF	1250950045C	27-JAN-2000	00-04-1144A	01
04	FL	CAPE CORAL, CITY OF	1250950045C	27-JAN-2000	00-04-1384A	01
04	FL	CASSELBERRY, CITY OF	12117C0140E	30-MAR-2000	00-04-0438A	01
04	FL	CHARLOTTE COUNTY *	1200610013E	08-MAY-2000	00-04-105P	05
04	FL	CHARLOTTE COUNTY *	1200610045E	16-FEB-2000	99-04-329P	05
04	FL	CITRUS COUNTY *	1200630120B	18-JAN-2000	00-04-0916A	02
04	FL	CITRUS COUNTY *	1200630175B	14-MAR-2000	00-04-2026A	02
04	FL	CITRUS COUNTY *	1200630175B	23-MAR-2000	00-04-1902A	02
04	FL	CITRUS COUNTY *	1200630220B	04-APR-2000	00-04-1534A	02
04	FL	CITRUS COUNTY *	1200630255B	11-APR-2000	00-04-2302A	02
04	FL	CITRUS COUNTY *	1200630260B	08-FEB-2000	00-04-1228A	02
04	FL	CITRUS COUNTY *	1200630300B	18-MAY-2000	00-04-2384A	02
04	FL	CLAY COUNTY *	1200640135D	01-FEB-2000	00-04-0030A	01
04	FL	CLAY COUNTY *	1200640135D	23-MAR-2000	00-04-1872A	02
04	FL	CLAY COUNTY *	1200640350D	01-JUN-2000	00-04-2430A	02
04	FL	CLERMONT, CITY OF	1201330001B	08-FEB-2000	00-04-0252A	02
04	FL	COCONUT CREEK, CITY OF	12011C0115F	11-APR-2000	00-04-1302A	01
04	FL	COCONUT CREEK, CITY OF	12011C0115F	14-MAR-2000	00-04-1318A	01
04	FL	COCONUT CREEK, CITY OF	12011C0115F	18-APR-2000	00-04-2826X	01
04	FL	COCONUT CREEK, CITY OF	12011C0115F	23-MAY-2000	00-04-1158A	02
04	FL	COLLIER COUNTY *	1200670582F	18-JAN-2000	00-04-0878A	01
04	FL	COLLIER COUNTY *	1200670605E	01-JUN-2000	00-04-3020A	01
04	FL	COLLIER COUNTY *	1200670605E	04-JAN-2000	00-04-0526A	01
04	FL	COLLIER COUNTY *	1200670605E	06-APR-2000	00-04-2516A	01
04	FL	COLLIER COUNTY *	1200670605E	18-JAN-2000	99-04-5980A	01
04	FL	COLLIER COUNTY *	1200670605E	23-MAY-2000	00-04-2580A	01
04	FL	COLLIER COUNTY *	1200670605E	27-JAN-2000	00-04-0562A	01
04	FL	COLLIER COUNTY *	1200670605E	27-JAN-2000	00-04-0564A	01
04	FL	COLLIER COUNTY *	1200670605E	28-MAR-2000	00-04-1566A	01
04	FL	COLLIER COUNTY *	1200670605E	30-MAY-2000	00-04-3190A	01
04	FL	COLUMBIA COUNTY*	1200700175B	20-APR-2000	00-04-2004A	02
04	FL	COLUMBIA COUNTY*	1200700175B	28-MAR-2000	00-04-1236A	01
04	FL	CORAL SPRINGS, CITY OF	12011C0095F	16-MAY-2000	00-04-2634A	02
04	FL	CORAL SPRINGS, CITY OF	12011C0095F	31-MAR-2000	99-04-5988A	01
04	FL	DADE COUNTY*	12025C0075J	06-JAN-2000	00-04-0640A	01
04	FL	DADE COUNTY*	12025C0075J	25-MAY-2000	00-04-3184A	01
04	FL	DADE COUNTY*	12025C0080J	01-FEB-2000	00-04-0952A	01

Region	State	Community	Map panel	Determination date	Case No.	Type
04	FL	DADE COUNTY*	12025C0080J	02-MAY-2000	00-04-2540A	01
04	FL	DADE COUNTY*	12025C0080J	04-APR-2000	00-04-2304A	01
04	FL	DADE COUNTY*	12025C0080J	06-APR-2000	00-04-0022A	02
04	FL	DADE COUNTY*	12025C0160J	04-MAY-2000	00-04-3252A	01
04	FL	DADE COUNTY*	12025C0160J	15-FEB-2000	00-04-2040X	01
04	FL	DADE COUNTY*	12025C0160J	25-MAY-2000	00-04-3328A	01
04	FL	DADE COUNTY*	12025C0160J	25-MAY-2000	00-04-3540A	01
04	FL	DADE COUNTY*	12025C0160J	28-JAN-2000	00-04-1836A	01
04	FL	DADE COUNTY*	12025C0165J	04-APR-2000	00-04-1954X	01
04	FL	DADE COUNTY*	12025C0190J	18-JAN-2000	00-04-1088A	02
04	FL	DADE COUNTY*	12025C0255J	25-APR-2000	00-04-1938A	01
04	FL	DADE COUNTY*	12025C0255J	29-FEB-2000	00-04-1730X	01
04	FL	DADE COUNTY*	12025C0260J	15-FEB-2000	00-04-1610A	01
04	FL	DADE COUNTY*	12025C0265J	04-JAN-2000	00-04-0536A	01
04	FL	DADE COUNTY*	12025C0265J	11-APR-2000	00-04-0692A	01
04	FL	DADE COUNTY*	12025C0356J	22-FEB-2000	00-04-0434A	01
04	FL	DADE COUNTY*	12025C0358K	17-FEB-2000	00-04-1766A	01
04	FL	DEERFIELD BEACH, CITY OF	12011C0108F	27-APR-2000	00-04-1360A	02
04	FL	DEERFIELD BEACH, CITY OF	12011C0109G	20-JAN-2000	00-04-1082A	02
04	FL	ESCAMBIA COUNTY*	12033C0025F	21-MAR-2000	00-04-2122A	02
04	FL	ESCAMBIA COUNTY*	12033C0025F	24-FEB-2000	00-04-2178V	19
04	FL	EUSTIS, CITY OF	1201340005B	06-APR-2000	00-04-2260A	02
04	FL	FERNANDINA BEACH, CITY OF	1201720004E	27-JAN-2000	00-04-1486A	02
04	FL	FORT LAUDERDALE, CITY OF	12011C0216F	20-JAN-2000	00-04-1068A	02
04	FL	FORT MYERS, CITY OF	1251060010B	16-MAY-2000	00-04-2578A	01
04	FL	FORT MYERS, CITY OF	1251060010B	27-JAN-2000	00-04-1576A	01
04	FL	FRANKLIN COUNTY *	1200880195B	16-MAY-2000	00-04-2140A	18
04	FL	FRANKLIN COUNTY *	1200880580D	14-JAN-2000	00-04-0372A	02
04	FL	FROSTPROOF, CITY OF	1202650001B	02-MAY-2000	00-04-2856A	02
04	FL	GAINESVILLE, CITY OF	1251070004B	16-JAN-2000	96-04-183P	05
04	FL	GULF BREEZE, CITY OF	1202750011F	27-JAN-2000	00-04-0816A	01
04	FL	GULF BREEZE, CITY OF	1202750011F	28-MAR-2000	00-04-2628X	01
04	FL	HALLANDALE, CITY OF	12011C0318F	09-MAY-2000	00-04-2914A	02
04	FL	HAMILTON COUNTY*	12047C0065B	13-JAN-2000	00-04-1094A	02
04	FL	HERNANDO COUNTY *	1201100150B	11-JAN-2000	00-04-1246A	02
04	FL	HERNANDO COUNTY *	1201100300B	02-MAR-2000	00-04-1472A	02
04	FL	HIALEAH, CITY OF	12025C0075J	02-MAR-2000	00-04-1406A	02
04	FL	HIALEAH, CITY OF	12025C0075J	13-APR-2000	00-04-0432A	01
04	FL	HIGHLANDS COUNTY *	1201110100B	27-JAN-2000	99-04-5854A	02
04	FL	HIGHLANDS COUNTY *	1201110250B	07-MAR-2000	00-04-1284A	02
04	FL	HILLSBOROUGH COUNTY*	1201120040D	01-FEB-2000	00-04-1340A	02
04	FL	HILLSBOROUGH COUNTY*	1201120040D	01-JUN-2000	00-04-2688A	02
04	FL	HILLSBOROUGH COUNTY*	1201120065D	11-JAN-2000	99-04-5698A	02
04	FL	HILLSBOROUGH COUNTY*	1201120090E	11-JAN-2000	99-04-5946A	01
04	FL	HILLSBOROUGH COUNTY*	1201120090E	11-MAY-2000	00-04-2158A	01
04	FL	HILLSBOROUGH COUNTY*	1201120090E	18-MAY-2000	00-04-2542A	01
04	FL	HILLSBOROUGH COUNTY*	1201120160C	06-APR-2000	00-04-2348A	01
04	FL	HILLSBOROUGH COUNTY*	1201120160C	13-JAN-2000	00-04-1168A	01
04	FL	HILLSBOROUGH COUNTY*	1201120167C	15-FEB-2000	00-04-1060A	01
04	FL	HILLSBOROUGH COUNTY*	1201120169C	16-MAY-2000	00-04-1176A	01
04	FL	HILLSBOROUGH COUNTY*	1201120180F	04-JAN-2000	00-04-1012A	02
04	FL	HILLSBOROUGH COUNTY*	1201120180F	11-APR-2000	00-04-2012A	01
04	FL	HILLSBOROUGH COUNTY*	1201120180F	23-MAR-2000	00-04-1178A	01
04	FL	HILLSBOROUGH COUNTY*	1201120185F	03-FEB-2000	00-04-1374A	02
04	FL	HILLSBOROUGH COUNTY*	1201120185F	09-MAY-2000	00-04-2210A	02
04	FL	HILLSBOROUGH COUNTY*	1201120185F	10-FEB-2000	99-04-6250A	01
04	FL	HILLSBOROUGH COUNTY*	1201120185F	14-MAR-2000	00-04-1918A	02
04	FL	HILLSBOROUGH COUNTY*	1201120185F	24-FEB-2000	00-04-1664A	01
04	FL	HILLSBOROUGH COUNTY*	1201120185F	27-JAN-2000	00-04-0542A	02
04	FL	HILLSBOROUGH COUNTY*	1201120185F	29-FEB-2000	00-04-1642A	01
04	FL	HILLSBOROUGH COUNTY*	1201120190D	04-APR-2000	00-04-2464X	01
04	FL	HILLSBOROUGH COUNTY*	1201120192D	14-JAN-2000	00-04-0024A	01
04	FL	HILLSBOROUGH COUNTY*	1201120205D	02-MAY-2000	00-04-2390A	02
04	FL	HILLSBOROUGH COUNTY*	1201120205D	11-JAN-2000	99-04-6208A	02
04	FL	HILLSBOROUGH COUNTY*	1201120205D	14-MAR-2000	00-04-0492A	01
04	FL	HILLSBOROUGH COUNTY*	1201120210E	07-MAR-2000	00-04-0440A	01
04	FL	HILLSBOROUGH COUNTY*	1201120210E	22-FEB-2000	99-04-6304A	01
04	FL	HILLSBOROUGH COUNTY*	1201120210E	23-MAR-2000	00-04-0444A	01
04	FL	HILLSBOROUGH COUNTY*	1201120210E	28-JAN-2000	99-04-4186A	01
04	FL	HILLSBOROUGH COUNTY*	1201120240C	15-FEB-2000	00-04-1226A	02
04	FL	HILLSBOROUGH COUNTY*	1201120380E	04-FEB-2000	99-04-6326A	01
04	FL	HILLSBOROUGH COUNTY*	1201120386E	11-MAY-2000	00-04-2798A	02
04	FL	HILLSBOROUGH COUNTY*	1201120387E	06-JAN-2000	00-04-0882A	01

Region	State	Community	Map panel	Determination date	Case No.	Type
04	FL	HILLSBOROUGH COUNTY*	1201120387E	11-APR-2000	00-04-2098A	02
04	FL	HILLSBOROUGH COUNTY*	1201120387E	23-MAY-2000	00-04-2642A	01
04	FL	HILLSBOROUGH COUNTY*	1201120387E	24-FEB-2000	00-04-2184A	01
04	FL	HILLSBOROUGH COUNTY*	1201120387E	27-APR-2000	00-04-1666A	01
04	FL	HILLSBOROUGH COUNTY*	1201120389D	03-FEB-2000	00-04-0754A	01
04	FL	HILLSBOROUGH COUNTY*	1201120389D	06-JAN-2000	00-04-0422A	01
04	FL	HILLSBOROUGH COUNTY*	1201120395E	25-APR-2000	00-04-1416A	01
04	FL	HILLSBOROUGH COUNTY*	1201120395E	27-JAN-2000	00-04-1092X	01
04	FL	HILLSBOROUGH COUNTY*	1201120415C	06-JAN-2000	00-04-0600A	01
04	FL	HILLSBOROUGH COUNTY*	1201120415C	18-APR-2000	00-04-2472A	01
04	FL	HILLSBOROUGH COUNTY*	1201120415C	30-MAR-2000	00-04-2206A	01
04	FL	HILLSBOROUGH COUNTY*	1201120425C	23-MAY-2000	00-04-2576A	02
04	FL	HILLSBOROUGH COUNTY*	1201120450B	18-JAN-2000	00-04-0244A	02
04	FL	HILLSBOROUGH COUNTY*	1201120494C	27-JAN-2000	00-04-1468A	01
04	FL	HILLSBOROUGH COUNTY*	1201120530C	30-MAR-2000	00-04-2166A	01
04	FL	HOLLYWOOD, CITY OF	12011C0302F	20-APR-2000	99-04-179P	05
04	FL	HOLLYWOOD, CITY OF	12011C0304F	03-FEB-2000	00-04-1004A	02
04	FL	HOMESTEAD, CITY OF	12025C0365J	11-MAY-2000	00-04-2474A	01
04	FL	HOMESTEAD, CITY OF	12025C0365J	13-APR-2000	00-04-2192A	01
04	FL	INDIAN RIVER COUNTY *	12061C0060E	06-JAN-2000	00-04-1214X	01
04	FL	INDIAN RIVER COUNTY *	12061C0070E	04-JAN-2000	00-04-1010A	01
04	FL	INDIAN RIVER COUNTY *	12061C0070E	15-FEB-2000	00-04-1640A	01
04	FL	ISLAMORADA, VILLAGE OF	12087C1131H	15-FEB-2000	00-04-1254A	02
04	FL	ISLAMORADA, VILLAGE OF	12087C1131H	22-FEB-2000	00-04-1692A	02
04	FL	ISLAMORADA, VILLAGE OF	12087C1131H	22-FEB-2000	00-04-1732A	02
04	FL	JACKSON COUNTY *	12063C0300C	16-MAY-2000	00-04-2682A	02
04	FL	JACKSONVILLE, CITY OF	1200770150E	04-JAN-2000	99-04-4512A	01
04	FL	JACKSONVILLE, CITY OF	1200770157E	16-MAY-2000	00-04-1992A	02
04	FL	JACKSONVILLE, CITY OF	1200770209E	09-MAY-2000	00-04-0708A	02
04	FL	JACKSONVILLE, CITY OF	1200770226E	11-MAY-2000	00-04-2274A	02
04	FL	JACKSONVILLE, CITY OF	1200770234E	18-MAY-2000	00-04-2022A	02
04	FL	JACKSONVILLE, CITY OF	1200770238E	06-JAN-2000	00-04-0478A	01
04	FL	JACKSONVILLE, CITY OF	1200770238E	25-APR-2000	00-04-2052A	01
04	FL	JACKSONVILLE, CITY OF	1200770241E	06-JAN-2000	00-04-0678A	02
04	FL	JACKSONVILLE, CITY OF	1200770241E	25-MAY-2000	00-04-0450A	01
04	FL	LAKE COUNTY *	1204210100B	11-JAN-2000	00-04-0344A	02
04	FL	LAKE COUNTY *	1204210100B	20-APR-2000	00-04-2008A	02
04	FL	LAKE COUNTY *	1204210125B	01-JUN-2000	00-04-3034A	02
04	FL	LAKE COUNTY *	1204210125B	04-MAY-2000	00-04-2808A	02
04	FL	LAKE COUNTY *	1204210200B	11-MAY-2000	00-04-2606A	02
04	FL	LAKE COUNTY *	1204210200B	23-MAY-2000	00-04-2668A	02
04	FL	LAKE COUNTY *	1204210200B	23-MAY-2000	00-04-2982A	02
04	FL	LAKE COUNTY *	1204210225B	03-FEB-2000	00-04-1372A	02
04	FL	LAKE COUNTY *	1204210225B	03-FEB-2000	00-04-1548A	02
04	FL	LAKE COUNTY *	1204210225B	20-JAN-2000	00-04-0166A	02
04	FL	LAKE COUNTY *	1204210225B	27-JAN-2000	00-04-0944A	02
04	FL	LAKE COUNTY *	1204210325B	05-APR-2000	00-04-0660A	02
04	FL	LAKE COUNTY *	1204210325B	22-FEB-2000	00-04-1720A	02
04	FL	LAKE COUNTY *	1204210350B	16-MAR-2000	00-04-1976A	02
04	FL	LAKE COUNTY *	1204210375B	15-FEB-2000	00-04-1380A	02
04	FL	LAKE MARY, CITY OF	12117C0040E	04-MAY-2000	00-04-1734A	02
04	FL	LAKE MARY, CITY OF	12117C0040E	13-APR-2000	00-04-2214A	01
04	FL	LAKE MARY, CITY OF	12117C0040E	15-MAR-2000	99-04-3654A	01
04	FL	LAKE MARY, CITY OF	12117C0040E	25-APR-2000	00-04-0456A	01
04	FL	LAUDERHILL, CITY OF	12011C0204F	11-MAY-2000	00-04-2488A	02
04	FL	LAUDERHILL, CITY OF	12011C0205F	22-FEB-2000	00-04-1418A	01
04	FL	LAUDERHILL, CITY OF	12011C0212F	13-JAN-2000	00-04-0824A	01
04	FL	LAUDERHILL, CITY OF	12011C0212F	28-JAN-2000	99-04-5730A	01
04	FL	LEE COUNTY*	1251240075D	28-APR-2000	99-04-5856A	02
04	FL	LEE COUNTY*	1251240200C	15-FEB-2000	00-04-0780A	01
04	FL	LEE COUNTY*	1251240250B	14-MAR-2000	00-04-1436A	02
04	FL	LEE COUNTY*	1251240465C	06-JAN-2000	00-04-0786A	01
04	FL	LEE COUNTY*	1251240510D	20-JAN-2000	99-04-5732A	01
04	FL	LEON COUNTY *	12073C0115D	14-MAR-2000	00-04-0304A	02
04	FL	LEON COUNTY *	12073C0115D	22-FEB-2000	00-04-1504X	01
04	FL	LEON COUNTY *	12073C0115D	22-FEB-2000	00-04-1506X	01
04	FL	LEON COUNTY *	12073C0115D	22-FEB-2000	00-04-1508X	01
04	FL	LEON COUNTY *	12073C0115D	22-FEB-2000	00-04-1510X	01
04	FL	LEON COUNTY *	12073C0115D	22-FEB-2000	00-04-1512X	01
04	FL	LEON COUNTY *	12073C0115D	22-FEB-2000	00-04-1514X	01
04	FL	LEVY COUNTY *	1201450025D	23-MAY-2000	00-04-2362A	02
04	FL	MANATEE COUNTY *	1201530045B	28-MAR-2000	00-04-2164A	02
04	FL	MANATEE COUNTY *	1201530327C	14-MAR-2000	00-04-2102A	01

Region	State	Community	Map panel	Determination date	Case No.	Type
04	FL	MANATEE COUNTY *	1201530341B	29-FEB-2000	00-04-1462A	02
04	FL	MANATEE COUNTY *	1201530360C	21-MAR-2000	00-04-0430A	17
04	FL	MANATEE COUNTY *	1201530365C	09-MAR-2000	00-04-1844A	01
04	FL	MANATEE COUNTY *	1201530365C	18-APR-2000	99-04-5600A	01
04	FL	MARGATE, CITY OF	12011C0115F	07-MAR-2000	00-04-1820A	02
04	FL	MARGATE, CITY OF	12011C0115F	18-APR-2000	00-04-2220A	02
04	FL	MARION COUNTY *	1201600100B	14-MAR-2000	00-04-1788A	02
04	FL	MARION COUNTY *	1201600540B	04-MAY-2000	00-04-2812A	02
04	FL	MARTIN COUNTY *	1201610160F	18-APR-2000	00-04-1876A	01
04	FL	MARTIN COUNTY *	1201610160F	18-MAY-2000	00-04-2842A	01
04	FL	MELBOURNE, CITY OF	12009C0441F	27-JAN-2000	00-04-0424A	01
04	FL	MIAMI, CITY OF	12025C0093J	07-MAR-2000	00-04-1596A	02
04	FL	MIAMI, CITY OF	12025C0187J	25-APR-2000	00-04-1964A	02
04	FL	MIRAMAR, CITY OF	12011C0295F	01-JUN-2000	00-04-3238A	01
04	FL	MIRAMAR, CITY OF	12011C0295F	04-APR-2000	00-04-1172A	01
04	FL	MIRAMAR, CITY OF	12011C0295F	09-MAR-2000	00-04-1822A	01
04	FL	MIRAMAR, CITY OF	12011C0295F	09-MAR-2000	00-04-1882A	01
04	FL	MIRAMAR, CITY OF	12011C0295F	11-JAN-2000	00-04-0598A	01
04	FL	MIRAMAR, CITY OF	12011C0295F	13-JAN-2000	00-04-1310A	01
04	FL	MIRAMAR, CITY OF	12011C0295F	14-JAN-2000	00-04-1084A	01
04	FL	MIRAMAR, CITY OF	12011C0295F	20-JAN-2000	99-04-5456A	01
04	FL	MIRAMAR, CITY OF	12011C0295F	22-FEB-2000	00-04-1708A	01
04	FL	MIRAMAR, CITY OF	12011C0295F	23-MAY-2000	99-04-4370A	01
04	FL	NASSAU COUNTY*	1201700075C	24-FEB-2000	00-04-2066A	02
04	FL	NASSAU COUNTY*	1201700325C	08-MAR-2000	99-04-5432A	01
04	FL	NEW PORT RICHEY, CITY OF	1202300189C	14-JAN-2000	99-04-5244A	01
04	FL	OCOEE, CITY OF	1201850005B	04-JAN-2000	00-04-0896A	02
04	FL	OKALOOSA COUNTY *	1201730235E	28-MAR-2000	00-04-1668A	01
04	FL	OLDSMAR, CITY OF	1202500001B	16-MAY-2000	00-04-2236A	02
04	FL	OLDSMAR, CITY OF	1202500003B	10-FEB-2000	00-04-1724A	01
04	FL	OLDSMAR, CITY OF	1202500003B	18-APR-2000	00-04-2346A	01
04	FL	OLDSMAR, CITY OF	1202500003B	27-JAN-2000	00-04-1166A	01
04	FL	OLDSMAR, CITY OF	1202500004B	18-JAN-2000	00-04-0566A	01
04	FL	OPA-LOCKA, CITY OF	12025C0090J	15-FEB-2000	00-04-1658A	02
04	FL	ORANGE COUNTY *	1201790125D	15-FEB-2000	00-04-0810A	02
04	FL	ORANGE COUNTY *	1201790125D	18-MAY-2000	00-04-2448A	02
04	FL	ORANGE COUNTY *	1201790200D	07-MAR-2000	00-04-1562A	02
04	FL	ORANGE COUNTY *	1201790200D	16-MAY-2000	00-04-3196X	02
04	FL	ORANGE COUNTY *	1201790200D	19-APR-2000	00-04-2034A	02
04	FL	ORANGE COUNTY *	1201790225C	16-MAY-2000	00-04-2530A	02
04	FL	ORANGE COUNTY *	1201790225C	29-FEB-2000	99-04-3048A	01
04	FL	ORANGE COUNTY *	1201790250D	07-MAR-2000	00-04-1870A	02
04	FL	ORANGE COUNTY *	1201790250D	18-MAY-2000	00-04-2644A	01
04	FL	ORANGE COUNTY *	1201790250D	20-APR-2000	00-04-1278A	01
04	FL	ORANGE COUNTY *	1201790250D	21-JAN-2000	00-04-1224A	01
04	FL	ORANGE COUNTY *	1201790250D	22-FEB-2000	00-04-0008A	01
04	FL	ORANGE COUNTY *	1201790250D	28-MAR-2000	00-04-1854A	02
04	FL	ORANGE COUNTY *	1201790325B	04-APR-2000	00-04-1996A	02
04	FL	ORANGE COUNTY *	1201790350C	23-MAR-2000	00-04-1860A	02
04	FL	ORANGE COUNTY *	1201790375D	01-FEB-2000	00-04-1438A	02
04	FL	ORANGE COUNTY *	1201790375D	06-APR-2000	00-04-0016A	01
04	FL	ORANGE COUNTY *	1201790375D	10-MAY-2000	99-04-291P	05
04	FL	ORANGE COUNTY *	1201790375D	29-FEB-2000	00-04-1394A	02
04	FL	ORANGE COUNTY *	1201790400C	11-APR-2000	00-04-1458A	02
04	FL	ORANGE COUNTY *	1201790400C	29-FEB-2000	99-04-5972A	01
04	FL	ORMOND BEACH, CITY OF	1251360003D	22-FEB-2000	00-04-2070A	01
04	FL	OSCEOLA COUNTY *	1201890025C	08-FEB-2000	99-04-4516A	01
04	FL	OSCEOLA COUNTY *	1201890040B	17-FEB-2000	00-04-1558A	01
04	FL	OSCEOLA COUNTY *	1201890120B	01-FEB-2000	00-04-0756A	02
04	FL	OSCEOLA COUNTY *	1201890120B	01-FEB-2000	00-04-0758A	02
04	FL	OSCEOLA COUNTY *	1201890120B	01-FEB-2000	00-04-0760A	02
04	FL	OSCEOLA COUNTY *	1201890120B	01-FEB-2000	00-04-0762A	02
04	FL	OSCEOLA COUNTY *	1201890120B	09-FEB-2000	00-04-1066A	02
04	FL	OSCEOLA COUNTY *	1201890120B	09-MAY-2000	00-04-3116A	02
04	FL	OSCEOLA COUNTY *	1201890120B	27-JAN-2000	00-04-0960A	02
04	FL	OSCEOLA COUNTY *	1201890135C	09-MAY-2000	00-04-1886A	01
04	FL	OSCEOLA COUNTY *	1201890140B	01-FEB-2000	00-04-0986A	02
04	FL	OSCEOLA COUNTY *	1201890140B	18-APR-2000	00-04-1880A	02
04	FL	OSCEOLA COUNTY *	1201890140B	24-FEB-2000	00-04-1774A	01
04	FL	OSCEOLA COUNTY *	1201890175C	01-JUN-2000	00-04-2672A	02
04	FL	OSCEOLA COUNTY *	1201890205B	23-MAY-2000	00-04-2916A	02
04	FL	PALM BEACH COUNTY *	1201920117B	09-MAY-2000	00-04-2154A	01
04	FL	PALM BEACH COUNTY *	1201920150A	18-JAN-2000	00-04-1110A	01

Region	State	Community	Map panel	Determination date	Case No.	Type
04	FL	PALM BEACH COUNTY *	1201920200A	02-MAY-2000	00-04-2290A	01
04	FL	PALMETTO, CITY OF	1201590003C	14-JAN-2000	00-04-0752A	01
04	FL	PALMETTO, CITY OF	1201590003C	27-APR-2000	00-04-3232A	01
04	FL	PASCO COUNTY *	1202300050C	03-FEB-2000	00-04-1044A	02
04	FL	PASCO COUNTY *	1202300100B	27-JAN-2000	00-04-0922A	02
04	FL	PASCO COUNTY *	1202300180C	04-JAN-2000	00-04-0740A	02
04	FL	PASCO COUNTY *	1202300185D	21-MAR-2000	00-04-2200A	02
04	FL	PASCO COUNTY *	1202300185D	23-MAY-2000	00-04-2920A	02
04	FL	PASCO COUNTY *	1202300189C	27-APR-2000	00-04-2546A	01
04	FL	PASCO COUNTY *	1202300195D	01-JUN-2000	00-04-3454A	01
04	FL	PASCO COUNTY *	1202300195D	02-MAY-2000	00-04-3284A	01
04	FL	PASCO COUNTY *	1202300195D	15-FEB-2000	00-04-1628A	02
04	FL	PASCO COUNTY *	1202300195D	18-MAY-2000	00-04-1786A	02
04	FL	PASCO COUNTY *	1202300215D	09-MAY-2000	00-04-2456A	02
04	FL	PASCO COUNTY *	1202300215D	11-APR-2000	00-04-1994A	02
04	FL	PASCO COUNTY *	1202300215D	14-MAR-2000	00-04-1712A	02
04	FL	PASCO COUNTY *	1202300215D	28-MAR-2000	00-04-1710A	02
04	FL	PASCO COUNTY *	1202300352C	11-MAY-2000	00-04-2342A	02
04	FL	PASCO COUNTY *	1202300352C	25-APR-2000	00-04-2890A	02
04	FL	PASCO COUNTY *	1202300354D	12-APR-2000	99-04-5916A	01
04	FL	PASCO COUNTY *	1202300354D	13-APR-2000	00-04-2648A	02
04	FL	PASCO COUNTY *	1202300360D	04-APR-2000	00-04-2218A	02
04	FL	PASCO COUNTY *	1202300360D	04-JAN-2000	00-04-0048A	01
04	FL	PASCO COUNTY *	1202300360D	13-JAN-2000	00-04-0014A	01
04	FL	PASCO COUNTY *	1202300360D	16-MAR-2000	00-04-1900A	02
04	FL	PASCO COUNTY *	1202300360D	19-JAN-2000	99-04-5802A	01
04	FL	PASCO COUNTY *	1202300360D	22-FEB-2000	00-04-0002A	01
04	FL	PASCO COUNTY *	1202300360D	22-FEB-2000	00-04-1314A	01
04	FL	PASCO COUNTY *	1202300360D	23-MAY-2000	00-04-1190A	01
04	FL	PASCO COUNTY *	1202300362D	01-JUN-2000	00-04-3058A	02
04	FL	PASCO COUNTY *	1202300370D	01-FEB-2000	99-04-5936A	01
04	FL	PASCO COUNTY *	1202300370D	13-APR-2000	00-04-1598A	01
04	FL	PASCO COUNTY *	1202300410E	04-JAN-2000	00-04-1014A	01
04	FL	PASCO COUNTY *	1202300410E	11-MAY-2000	00-04-2170A	01
04	FL	PASCO COUNTY *	1202300410E	11-MAY-2000	00-04-2910A	01
04	FL	PASCO COUNTY *	1202300410E	21-JAN-2000	00-04-1530X	01
04	FL	PASCO COUNTY *	1202300410E	27-JAN-2000	00-04-1706A	01
04	FL	PASCO COUNTY *	1202300410E	29-FEB-2000	00-04-1132A	02
04	FL	PASCO COUNTY *	1202300410E	30-MAR-2000	00-04-2506A	01
04	FL	PASCO COUNTY *	1202300425E	05-APR-2000	00-04-2056A	02
04	FL	PASCO COUNTY *	1202300425E	07-MAR-2000	99-04-5646A	02
04	FL	PASCO COUNTY *	1202300425E	14-JAN-2000	00-04-0874A	02
04	FL	PASCO COUNTY *	1202300425E	25-FEB-2000	00-04-1742X	02
04	FL	PASCO COUNTY *	1202300425E	27-JAN-2000	00-04-0990A	01
04	FL	PASCO COUNTY *	1202300425E	28-JAN-2000	00-04-0300A	01
04	FL	PASCO COUNTY *	1202300430E	01-FEB-2000	99-04-4696A	01
04	FL	PASCO COUNTY *	1202300430E	01-JUN-2000	00-04-2722A	01
04	FL	PASCO COUNTY *	1202300430E	18-JAN-2000	99-04-5326A	02
04	FL	PASCO COUNTY *	1202300450E	09-MAR-2000	00-04-1654A	02
04	FL	PASCO COUNTY *	1202300450E	13-JAN-2000	99-04-6324A	01
04	FL	PASCO COUNTY *	1202300450E	14-MAR-2000	00-04-0436A	01
04	FL	PASCO COUNTY *	1202300450E	14-MAR-2000	99-04-5448A	01
04	FL	PASCO COUNTY *	1202300455D	09-MAR-2000	00-04-1586A	01
04	FL	PEMBROKE PINES, CITY OF	12011C0290F	13-JAN-2000	00-04-0210A	01
04	FL	PEMBROKE PINES, CITY OF	12011C0295F	04-JAN-2000	00-04-1204X	01
04	FL	PINELLAS COUNTY *	1251390037C	11-APR-2000	00-04-1726A	01
04	FL	PINELLAS COUNTY *	1251390037C	20-APR-2000	00-04-2670A	02
04	FL	PINELLAS COUNTY *	1251390043C	18-JAN-2000	00-04-1086A	02
04	FL	PINELLAS COUNTY *	1251390059C	28-MAR-2000	00-04-2690A	02
04	FL	PINELLAS COUNTY *	1251390077C	18-JAN-2000	00-04-0004A	01
04	FL	PINELLAS COUNTY *	1251390077C	25-APR-2000	00-04-2134A	01
04	FL	PINELLAS COUNTY *	1251390081C	08-FEB-2000	00-04-1170A	01
04	FL	PINELLAS COUNTY *	1251390083C	23-MAY-2000	00-04-2120A	02
04	FL	PINELLAS COUNTY *	1251390086C	10-FEB-2000	00-04-1376A	02
04	FL	PINELLAS COUNTY *	1251390087C	01-JUN-2000	00-04-3162A	02
04	FL	PINELLAS COUNTY *	1251390119C	14-MAR-2000	00-04-1956A	02
04	FL	PINELLAS COUNTY *	1251390119C	16-MAY-2000	00-04-1814A	02
04	FL	POLK COUNTY*	1202610100B	23-MAY-2000	00-04-2462A	02
04	FL	POLK COUNTY*	1202610250B	20-APR-2000	00-04-2400A	02
04	FL	POLK COUNTY*	1202610295B	03-FEB-2000	00-04-1656A	02
04	FL	POLK COUNTY*	1202610295B	25-APR-2000	00-04-2042A	02
04	FL	POLK COUNTY*	1202610305B	04-MAY-2000	00-04-1218X	02
04	FL	POLK COUNTY*	1202610310B	03-FEB-2000	00-04-1560A	02

Region	State	Community	Map panel	Determination date	Case No.	Type
04	FL	POLK COUNTY*	1202610345B	09-MAY-2000	00-04-2272A	02
04	FL	POLK COUNTY*	1202610350B	18-APR-2000	00-04-2294A	02
04	FL	POLK COUNTY*	1202610350B	21-MAR-2000	00-04-1986A	02
04	FL	POLK COUNTY*	1202610350B	27-JAN-2000	00-04-0774A	02
04	FL	POLK COUNTY*	1202610375D	28-MAR-2000	00-04-1858A	02
04	FL	POLK COUNTY*	1202610425B	03-FEB-2000	00-04-1208A	02
04	FL	POLK COUNTY*	1202610475D	07-MAR-2000	00-04-1350A	01
04	FL	POLK COUNTY*	1202610475D	16-MAY-2000	00-04-1828A	02
04	FL	POLK COUNTY*	1202610480D	03-FEB-2000	00-04-1544A	02
04	FL	POLK COUNTY*	1202610525B	06-JAN-2000	00-04-0812A	02
04	FL	POLK COUNTY*	1202610575D	16-MAY-2000	00-04-1716A	02
04	FL	POLK COUNTY*	1202610725B	09-MAR-2000	00-04-1392A	02
04	FL	POMPANO BEACH, CITY OF	12011C0119G	24-FEB-2000	00-04-0942A	02
04	FL	PORT ORANGE, CITY OF	1203130005C	03-FEB-2000	00-04-0954A	02
04	FL	PORT ORANGE, CITY OF	1251550408E	13-APR-2000	00-04-1184A	01
04	FL	PORT ORANGE, CITY OF	1251550408E	25-FEB-2000	99-04-5844A	01
04	FL	PUTNAM COUNTY *	1202720125A	07-JAN-2000	99-04-351P	06
04	FL	PUTNAM COUNTY *	1202720125B	24-FEB-2000	00-04-1796A	02
04	FL	PUTNAM COUNTY *	1202720310B	08-FEB-2000	00-04-0560A	02
04	FL	RIVIERA BEACH, CITY OF	1251420003D	04-APR-2000	00-04-1898A	02
04	FL	RIVIERA BEACH, CITY OF	1251420003D	30-MAR-2000	00-04-2126A	02
04	FL	ROCKLEDGE, CITY OF	12009C0365E	18-MAY-2000	00-04-2908A	01
04	FL	SANTA ROSA COUNTY *	1202740025B	20-JAN-2000	00-04-1490V	19
04	FL	SARASOTA COUNTY *	1251440075D	11-MAY-2000	00-04-2030A	02
04	FL	SARASOTA COUNTY *	1251440075D	12-JAN-2000	00-04-0392A	02
04	FL	SARASOTA COUNTY *	1251440075D	13-APR-2000	00-04-1348A	02
04	FL	SARASOTA COUNTY *	1251440141D	16-FEB-2000	99-04-333P	05
04	FL	SARASOTA COUNTY *	1251440144E	02-FEB-2000	00-04-1090A	02
04	FL	SARASOTA COUNTY *	1251440153E	16-MAY-2000	00-04-2790A	01
04	FL	SARASOTA COUNTY *	1251440154E	08-FEB-2000	00-04-0072A	01
04	FL	SARASOTA COUNTY *	1251440239D	21-APR-2000	00-04-107P	05
04	FL	SEMINOLE COUNTY*	12117C0020E	09-MAR-2000	00-04-0120A	01
04	FL	SEMINOLE COUNTY*	12117C0040E	04-JAN-2000	00-04-0704A	01
04	FL	SEMINOLE COUNTY*	12117C0110E	11-APR-2000	00-04-2182A	17
04	FL	SEMINOLE COUNTY*	12117C0115E	04-JAN-2000	00-04-0286A	02
04	FL	SEMINOLE COUNTY*	12117C0120E	11-MAY-2000	00-04-2264A	02
04	FL	SEMINOLE COUNTY*	12117C0120E	30-MAR-2000	00-04-1242A	02
04	FL	SEMINOLE COUNTY*	12117C0140E	20-JAN-2000	00-04-1344A	02
04	FL	SEMINOLE COUNTY*	12117C0145E	01-JUN-2000	00-04-2396A	02
04	FL	SEMINOLE COUNTY*	12117C0145E	02-MAY-2000	00-04-2666A	02
04	FL	SEMINOLE COUNTY*	12117C0145E	16-MAR-2000	00-04-1714A	02
04	FL	SEMINOLE COUNTY*	12117C0145E	21-MAR-2000	00-04-1536A	02
04	FL	SEMINOLE COUNTY*	12117C0170E	14-MAR-2000	00-04-1606A	02
04	FL	ST. AUGUSTINE, CITY OF	1251450001D	08-FEB-2000	00-04-1330A	01
04	FL	ST. CLOUD, CITY OF	1201910005D	18-MAY-2000	00-04-1186A	01
04	FL	ST. JOHNS COUNTY *	1251470016D	10-MAR-2000	99-04-6028A	02
04	FL	ST. JOHNS COUNTY *	1251470090D	03-FEB-2000	00-04-1466A	01
04	FL	ST. JOHNS COUNTY *	1251470187D	27-JAN-2000	00-04-0648A	02
04	FL	ST. LUCIE COUNTY *	12111C0070F	10-JAN-2000	99-04-5644A	02
04	FL	STUART, CITY OF	1201650005D	02-MAY-2000	00-04-1324A	02
04	FL	STUART, CITY OF	1201650005D	06-JAN-2000	00-04-1098A	02
04	FL	TALLAHASSEE, CITY OF	12073C0284D	20-APR-2000	00-04-073P	05
04	FL	TALLAHASSEE, CITY OF	12073C0303	20-APR-2000	00-04-073P	.....
04	FL	TAMARAC, CITY OF	12011C0185F	11-MAY-2000	00-04-1188A	01
04	FL	TAMARAC, CITY OF	12011C0205F	09-MAR-2000	00-04-1874A	02
04	FL	TAMPA, CITY OF	1201140006C	20-APR-2000	00-04-2370A	02
04	FL	TAMPA, CITY OF	1201140022C	11-MAY-2000	00-04-2646A	02
04	FL	TARPON SPRINGS, CITY OF	1202590001B	17-MAR-2000	99-04-5800A	01
04	FL	TARPON SPRINGS, CITY OF	1202590005B	04-APR-2000	00-04-2198A	02
04	FL	TAVARES, CITY OF	1201380001B	20-JAN-2000	00-04-1022A	02
04	FL	TITUSVILLE, CITY OF	12009C0180E	24-FEB-2000	00-04-0506A	02
04	FL	VOLUSIA COUNTY*	1251550165E	01-JUN-2000	00-04-2706A	01
04	FL	VOLUSIA COUNTY*	1251550165E	17-FEB-2000	00-04-1502A	02
04	FL	VOLUSIA COUNTY*	1251550375E	19-JAN-2000	99-04-4818A	02
04	FL	VOLUSIA COUNTY*	1251550375E	28-MAR-2000	00-04-1680A	02
04	FL	VOLUSIA COUNTY*	1251550500E	16-MAY-2000	00-04-2380A	02
04	FL	WAKULLA COUNTY *	1203150225B	11-MAY-2000	00-04-2130A	02
04	FL	WAKULLA COUNTY *	1203150250B	06-APR-2000	00-04-2414A	02
04	FL	WAKULLA COUNTY *	1203150250B	11-MAY-2000	00-04-2360A	02
04	FL	WAKULLA COUNTY *	1203150250B	20-APR-2000	00-04-2108A	02
04	FL	WALTON COUNTY *	1203170025C	08-MAR-2000	00-04-2314V	19
04	FL	WINTER HAVEN, CITY OF	1202710015B	27-JAN-2000	00-04-1148A	02
04	FL	WINTER SPRINGS, CITY OF	12117C0135E	16-MAY-2000	00-04-1000A	02

Region	State	Community	Map panel	Determination date	Case No.	Type
04	FL	ZEPHYRHILLS, CITY OF	1202350005C	07-MAR-2000	00-04-1608A	02
04	GA	ALPHARETTA, CITY OF	13121C0058E	10-FEB-2000	99-04-5360A	02
04	GA	ALPHARETTA, CITY OF	13121C0058E	18-MAY-2000	00-04-2804A	02
04	GA	ATHENS-CLARKE COUNTY	1300400035C	30-MAR-2000	00-04-1556A	17
04	GA	ATLANTA, CITY OF	13121C0227E	13-APR-2000	00-04-2152A	01
04	GA	ATLANTA, CITY OF	13121C0233E	10-FEB-2000	00-04-1116A	02
04	GA	ATLANTA, CITY OF	13121C0233E	22-FEB-2000	00-04-0938A	02
04	GA	ATLANTA, CITY OF	13121C0334E	27-JAN-2000	00-04-0732A	02
04	GA	ATLANTA, CITY OF	13121C0353E	23-MAY-2000	00-04-1834A	02
04	GA	ATLANTA, CITY OF	13293C0065B	11-JAN-2000	00-04-1054X	02
04	GA	BALDWIN COUNTY*	1300050050B	28-MAR-2000	00-04-2036A	02
04	GA	BARROW COUNTY*	1304970050A	17-APR-2000	00-04-039P	05
04	GA	BARTOW COUNTY *	13015C0079F	11-MAY-2000	99-04-5962A	01
04	GA	BARTOW COUNTY *	13015C0079F	24-MAY-2000	99-04-195P	05
04	GA	BYRON, CITY OF	130374 A	01-FEB-2000	00-04-0828A	02
04	GA	CAMDEN COUNTY*	13039C0350C	01-JUN-2000	00-04-3230A	02
04	GA	CAMDEN COUNTY*	13039C0350C	03-FEB-2000	00-04-1030A	02
04	GA	CAMDEN COUNTY*	13039C0350C	11-JAN-2000	99-04-6328A	02
04	GA	CAMDEN COUNTY*	13039C0377C	16-MAY-2000	00-04-2678A	02
04	GA	CAMDEN COUNTY*	13039C0380D	16-MAY-2000	00-04-2680A	02
04	GA	CARTERSVILLE, CITY OF	13015C0079F	24-MAY-2000	99-04-195P	05
04	GA	CATOOSA COUNTY*	1300280025D	28-MAR-2000	00-04-1842A	01
04	GA	CATOOSA COUNTY*	1300280050D	28-FEB-2000	98-04-293P	05
04	GA	CHATHAM COUNTY*	1300300075C	05-APR-2000	00-04-1404A	02
04	GA	CHATHAM COUNTY*	1300300075C	11-APR-2000	00-04-1702A	01
04	GA	CHATHAM COUNTY*	1300300075C	24-FEB-2000	00-04-1794A	02
04	GA	CHEROKEE COUNTY*	13057C0330B	23-MAY-2000	00-04-2202A	01
04	GA	CLAYTON COUNTY*	1300410008A	18-MAY-2000	00-04-2246A	02
04	GA	COBB COUNTY*	13067C0010F	09-MAY-2000	00-04-2228A	02
04	GA	COBB COUNTY*	13067C0010F	10-FEB-2000	00-04-1220A	02
04	GA	COBB COUNTY*	13067C0010F	25-APR-2000	00-04-0646A	02
04	GA	COBB COUNTY*	13067C0015F	16-MAY-2000	00-04-2074A	02
04	GA	COBB COUNTY*	13067C0015F	25-APR-2000	00-04-2138A	02
04	GA	COBB COUNTY*	13067C0030F	11-APR-2000	00-04-1334A	02
04	GA	COBB COUNTY*	13067C0035F	25-APR-2000	00-04-2436A	02
04	GA	COBB COUNTY*	13067C0040F	11-JAN-2000	00-04-0188A	02
04	GA	COBB COUNTY*	13067C0040F	23-MAY-2000	00-04-2064A	02
04	GA	COBB COUNTY*	13067C0050F	09-MAR-2000	00-04-1564A	17
04	GA	COBB COUNTY*	13067C0050F	22-FEB-2000	00-04-1426A	02
04	GA	COBB COUNTY*	13067C0055F	11-MAY-2000	00-04-2608A	02
04	GA	COBB COUNTY*	13067C0055F	16-MAY-2000	00-04-2796A	02
04	GA	COBB COUNTY*	13067C0055F	20-APR-2000	00-04-1682A	02
04	GA	COBB COUNTY*	13067C0060F	18-MAY-2000	00-04-1618A	17
04	GA	COBB COUNTY*	13067C0070F	04-FEB-2000	99-04-4194A	02
04	GA	COBB COUNTY*	13067C0070F	22-FEB-2000	00-04-1304A	01
04	GA	COBB COUNTY*	13067C0075F	28-MAR-2000	00-04-1524A	02
04	GA	COBB COUNTY*	13067C0090F	15-FEB-2000	00-04-1428A	02
04	GA	COFFEE COUNTY*	1304650150B	09-MAY-2000	00-04-2886A	02
04	GA	COLUMBUS, CITY OF	1351580050D	08-FEB-2000	00-04-0650A	02
04	GA	COLUMBUS, CITY OF	1351580050D	28-MAR-2000	00-04-2142A	17
04	GA	COLUMBUS, CITY OF	1351580075D	06-JAN-2000	99-04-4030A	02
04	GA	DALTON, CITY OF	1301940005C	22-FEB-2000	00-04-1062A	02
04	GA	DE KALB COUNTY *	1300650002F	03-FEB-2000	00-04-0318A	02
04	GA	DE KALB COUNTY *	1300650004E	10-FEB-2000	99-04-6120A	02
04	GA	DE KALB COUNTY *	1300650004E	18-MAY-2000	00-04-2588A	02
04	GA	DE KALB COUNTY *	1300650007C	25-MAY-2000	00-04-2176A	02
04	GA	DE KALB COUNTY *	1300650009C	01-JUN-2000	00-04-3004A	17
04	GA	DE KALB COUNTY *	1300650010C	22-FEB-2000	00-04-1496A	02
04	GA	DE KALB COUNTY *	1300650013F	18-MAY-2000	99-04-5566A	01
04	GA	DECATUR, CITY OF	1351590001B	11-APR-2000	00-04-0316A	02
04	GA	DECATUR, CITY OF	1351590001B	14-MAR-2000	00-04-1818A	02
04	GA	DOUGLASVILLE, CITY OF	1303050005B	29-FEB-2000	00-04-019P	05
04	GA	DULUTH, CITY OF	1300980002C	30-MAY-2000	00-04-3170A	02
04	GA	DULUTH, CITY OF	1300980003C	09-MAY-2000	00-04-2450A	02
04	GA	FANNIN COUNTY	1302490050B	10-FEB-2000	00-04-1448A	02
04	GA	FAYETTE COUNTY *	13113C0125D	10-FEB-2000	00-04-1130A	02
04	GA	FLOYD COUNTY*	1300790160A	11-APR-2000	00-04-1252A	02
04	GA	FORSYTH COUNTY *	13117C0075C	13-APR-2000	00-04-2386A	02
04	GA	FORSYTH COUNTY *	13117C0075C	21-MAR-2000	00-04-2110A	02
04	GA	FORSYTH COUNTY *	13117C0115C	18-MAY-2000	00-04-1846A	02
04	GA	FORSYTH COUNTY *	13117C0125C	20-APR-2000	00-04-2288A	02
04	GA	FORSYTH COUNTY *	13117C0155C	02-MAY-2000	00-04-0466A	02
04	GA	FULTON COUNTY *	13121C0053E	01-FEB-2000	00-04-0866A	02

Region	State	Community	Map panel	Determination date	Case No.	Type
04	GA	FULTON COUNTY *	13121C0053E	07-MAR-2000	00-04-1584A	02
04	GA	FULTON COUNTY *	13121C0058E	01-FEB-2000	00-04-1032A	02
04	GA	FULTON COUNTY *	13121C0080E	03-FEB-2000	00-04-1016A	02
04	GA	FULTON COUNTY *	13121C0080E	27-JAN-2000	00-04-0782A	02
04	GA	FULTON COUNTY *	13121C0086E	15-FEB-2000	00-04-1026A	02
04	GA	FULTON COUNTY *	13121C0115E	06-JAN-2000	99-04-5558A	02
04	GA	FULTON COUNTY *	13121C0115E	18-JAN-2000	99-04-6130A	02
04	GA	FULTON COUNTY *	13121C0134E	13-APR-2000	00-04-2150A	01
04	GA	FULTON COUNTY *	13121C0144E	08-FEB-2000	99-04-3614A	02
04	GA	FULTON COUNTY *	13121C0153E	05-APR-2000	00-04-1690A	02
04	GA	FULTON COUNTY *	13121C0163E	15-FEB-2000	00-04-0694A	01
04	GA	FULTON COUNTY *	13121C0477E	27-APR-2000	00-04-1240A	02
04	GA	FULTON COUNTY *	13121C0478E	04-MAY-2000	00-04-2080A	17
04	GA	FULTON COUNTY *	13121C0478E	16-MAY-2000	00-04-2656A	02
04	GA	GWINNETT COUNTY *	1303220095C	30-MAR-2000	00-04-0070A	01
04	GA	GWINNETT COUNTY *	1303220160E	18-APR-2000	00-04-0946A	02
04	GA	GWINNETT COUNTY *	1303220160E	18-APR-2000	99-04-277P	05
04	GA	GWINNETT COUNTY *	1303220160E	18-MAY-2000	00-04-2922A	02
04	GA	GWINNETT COUNTY *	1303220160E	23-MAR-2000	99-04-4050A	02
04	GA	GWINNETT COUNTY *	1303220170C	18-JAN-2000	99-04-5528A	02
04	GA	GWINNETT COUNTY *	1303220185C	09-MAR-2000	98-04-031P	05
04	GA	GWINNETT COUNTY *	1303220190C	20-JAN-2000	00-04-0644A	02
04	GA	GWINNETT COUNTY *	1303220195C	04-JAN-2000	99-04-6330A	01
04	GA	GWINNETT COUNTY *	1303220195C	15-FEB-2000	00-04-1358A	02
04	GA	GWINNETT COUNTY *	1303220205C	14-MAR-2000	99-04-5986A	02
04	GA	GWINNETT COUNTY *	1303220285C	18-JAN-2000	00-04-0322A	02
04	GA	HALL COUNTY *	13139C0025E	21-MAR-2000	00-04-2514V	19
04	GA	HARRIS COUNTY*	1303380150A	09-MAR-2000	00-04-1792A	02
04	GA	HARRIS COUNTY*	1303380150A	13-JAN-2000	00-04-0074A	02
04	GA	HARRIS COUNTY*	1303380150A	22-FEB-2000	00-04-1676A	02
04	GA	HARRIS COUNTY*	1303380150A	25-APR-2000	00-04-1978A	02
04	GA	HARRIS COUNTY*	1303380150A	28-MAR-2000	00-04-1914A	02
04	GA	HARRIS COUNTY*	1303380175A	18-MAY-2000	99-04-5478P	05
04	GA	HARRIS COUNTY*	1303380250A	18-MAY-2000	99-04-5478P	.....
04	GA	HENRY COUNTY *	1304680065B	22-FEB-2000	99-04-249P	05
04	GA	HENRY COUNTY *	1304680070B	22-FEB-2000	99-04-249P	05
04	GA	HENRY COUNTY *	1304680125B	14-JAN-2000	99-04-4422A	02
04	GA	KENNESAW, CITY OF	13067C0030F	18-JAN-2000	00-04-0336A	02
04	GA	KENNESAW, CITY OF	13067C0030F	20-JAN-2000	00-04-0500A	02
04	GA	LAWRENCEVILLE, CITY OF	1300990001B	09-MAR-2000	98-04-031P	05
04	GA	LUMPKIN COUNTY	1303540200A	02-MAY-2000	00-04-0332A	02
04	GA	MACON, CITY OF	1300110010D	30-MAR-2000	00-04-2100A	02
04	GA	MACON, CITY OF	1300110020E	10-FEB-2000	00-04-1256A	02
04	GA	MACON, CITY OF	1300110025D	23-MAY-2000	00-04-1494A	02
04	GA	MACON, CITY OF	1300110025D	28-MAR-2000	00-04-1100A	02
04	GA	MARIETTA, CITY OF	13067C0035F	02-MAY-2000	00-04-3280A	02
04	GA	MARIETTA, CITY OF	13067C0050F	18-MAY-2000	00-04-1982A	02
04	GA	MARIETTA, CITY OF	13067C0050F	20-APR-2000	00-04-2466A	02
04	GA	MARIETTA, CITY OF	13067C0055F	23-MAY-2000	00-04-2994A	02
04	GA	MONROE COUNTY*	1301380025C	25-MAY-2000	00-04-3168A	02
04	GA	PAULDING COUNTY *	13223C0253B	15-FEB-2000	00-04-0326A	02
04	GA	POOLER, TOWN OF	1300300075C	30-MAY-2000	00-04-2148A	01
04	GA	RICHMOND COUNTY*	1301580060E	11-MAY-2000	00-04-2598X	02
04	GA	RICHMOND COUNTY*	1301580060E	17-FEB-2000	00-04-0470A	02
04	GA	RICHMOND COUNTY*	1301580070E	01-FEB-2000	99-04-5638A	02
04	GA	RICHMOND COUNTY*	1301580070E	09-MAY-2000	00-04-2510X	02
04	GA	ROSWELL, CITY OF	13121C0061E	10-FEB-2000	00-04-1268A	02
04	GA	ROSWELL, CITY OF	13121C0061E	27-JAN-2000	00-04-0794A	02
04	GA	SEMINOLE COUNTY*	130387 A	22-FEB-2000	00-04-1474A	02
04	GA	SMYRNA, CITY OF	13067C0075F	18-JAN-2000	00-04-0330A	02
04	GA	STOCKBRIDGE, CITY OF	1304680055B	22-FEB-2000	99-04-251P	05
04	GA	SUWANEE, CITY OF	1303280002A	01-FEB-2000	00-04-0788A	02
04	GA	UNION COUNTY*	1302540025C	16-MAY-2000	00-04-2536A	02
04	GA	VIDALIA, CITY OF	1302320002A	16-MAY-2000	00-04-2038A	01
04	GA	WALTON COUNTY *	13297C0020B	25-APR-2000	00-04-1262A	02
04	GA	WALTON COUNTY *	13297C0060B	13-APR-2000	00-04-2254A	02
04	GA	WALTON COUNTY *	13297C0080B	18-APR-2000	00-04-1456A	02
04	GA	WALTON COUNTY *	13297C0100B	11-JAN-2000	00-04-0324A	02
04	GA	WALTON COUNTY *	13297C0110B	18-APR-2000	99-04-5690A	02
04	GA	WHITFIELD COUNTY*	1301930140C	18-APR-2000	00-04-1446A	02
04	GA	WOODSTOCK, CITY OF	13057C0330B	11-MAY-2000	00-04-2418A	02
04	GA	WOODSTOCK, CITY OF	13057C0330B	17-FEB-2000	00-04-1752A	02
04	KY	BOYD COUNTY *	2100160030B	23-MAY-2000	00-04-0228A	02

Region	State	Community	Map panel	Determination date	Case No.	Type
04	KY	BROMLEY, CITY OF	2102530001C	27-JAN-2000	00-04-0642A	02
04	KY	BULLITT COUNTY*	210273 B	11-APR-2000	00-04-2752A	02
04	KY	BULLITT COUNTY*	210273 B	13-APR-2000	00-04-0486A	01
04	KY	BULLITT COUNTY*	210273 B	25-APR-2000	00-04-1542A	02
04	KY	HARDIN COUNTY*	21093C0132C	21-JAN-2000	99-04-5264A	01
04	KY	HENDERSON, CITY OF	2101090005D	09-MAY-2000	00-04-0836A	01
04	KY	HENDERSON, CITY OF	2101090005D	20-APR-2000	00-04-1974A	02
04	KY	HENDERSON, CITY OF	2102860050B	15-MAR-2000	99-04-5930A	02
04	KY	HOPKINSVILLE, CITY OF	2100550005B	04-APR-2000	00-04-1910A	02
04	KY	JEFFERSON COUNTY*	21111C0020D	08-FEB-2000	00-04-0354A	02
04	KY	JEFFERSON COUNTY*	21111C0040D	14-JAN-2000	00-04-0798X	01
04	KY	JEFFERSON COUNTY*	21111C0080D	22-FEB-2000	00-04-1728A	02
04	KY	JEFFERSON COUNTY*	21111C0085D	01-MAR-2000	99-04-4088A	02
04	KY	JEFFERSON COUNTY*	21111C0085D	29-FEB-2000	00-04-2156A	02
04	KY	JEFFERSON COUNTY*	21111C0095D	01-JUN-2000	99-04-5834A	02
04	KY	JEFFERSON COUNTY*	21111C0095D	08-FEB-2000	00-04-1292A	02
04	KY	JEFFERSON COUNTY*	21111C0115D	02-FEB-2000	00-04-0550A	02
04	KY	JEFFERSON COUNTY*	21111C0115D	06-JAN-2000	00-04-1370X	02
04	KY	JEFFERSON COUNTY*	21111C0135D	27-JAN-2000	00-04-0728A	02
04	KY	JEFFERSON COUNTY*	21111C0145D	18-MAY-2000	00-04-2980A	02
04	KY	JEFFERSON COUNTY*	21111C0160D	20-JAN-2000	00-04-0884A	02
04	KY	JEFFERSON COUNTY*	21111C0170D	04-APR-2000	00-04-2548A	02
04	KY	JEFFERSON COUNTY*	21111C0170D	06-APR-2000	00-04-2568A	02
04	KY	JEFFERSON COUNTY*	21111C0170D	08-FEB-2000	00-04-0776A	02
04	KY	JEFFERSON COUNTY*	21111C0170D	25-APR-2000	00-04-1522A	02
04	KY	JEFFERSON COUNTY*	21111C0170D	28-JAN-2000	00-04-1036A	02
04	KY	JEFFERSON COUNTY*	21111C0170D	28-JAN-2000	99-04-3926A	01
04	KY	LEXINGTON-FAYETTE URBAN COUNTY GOVERNMENT.	2100670080C	02-FEB-2000	99-04-5804A	01
04	KY	LEXINGTON-FAYETTE URBAN COUNTY GOVERNMENT.	2100670080C	12-JAN-2000	99-04-4644A	02
04	KY	LOUISVILLE, CITY OF	21111C0090D	16-MAY-2000	00-04-3068A	02
04	KY	LOUISVILLE, CITY OF	21111C0090D	24-FEB-2000	00-04-1612A	02
04	KY	MARSHALL COUNTY *	2102520025B	13-APR-2000	00-04-2256A	01
04	KY	MCCRACKEN COUNTY *	2101510020B	23-MAY-2000	00-04-2180A	02
04	KY	MOREHEAD, CITY OF	2102040005B	16-MAR-2000	99-04-171P	05
04	KY	NEWPORT, CITY OF	2100390001B	14-JAN-2000	99-04-4012A	02
04	KY	OWENSBORO, CITY OF	21059C0260C	02-FEB-2000	00-04-0216A	02
04	KY	OWENSBORO, CITY OF	21059C0260C	11-APR-2000	00-04-0736A	02
04	KY	OWENSBORO, CITY OF	21059C0280C	11-APR-2000	00-04-2408A	02
04	KY	OWENSBORO, CITY OF	21059C0280C	16-MAR-2000	99-04-5904A	02
04	KY	PIKE COUNTY*	21195C0181F	23-MAY-2000	00-04-2538A	02
04	KY	ROWAN COUNTY *	2102030020B	16-MAR-2000	99-04-171P	05
04	KY	SCOTT COUNTY *	2102070130B	04-APR-2000	99-04-5040A	01
04	KY	STANTON, CITY OF	2101960001B	28-MAR-2000	00-04-0848A	02
04	KY	STANTON, CITY OF	2101960001B	28-MAR-2000	00-04-1848A	02
04	KY	WINCHESTER, CITY OF	2100560002B	10-FEB-2000	99-04-6264A	02
04	MS	CALHOUN CITY,CITY OF	28013C0130C	04-APR-2000	00-04-2310X	01
04	MS	CALHOUN CITY,CITY OF	28013C0130C	10-FEB-2000	00-04-1222A	01
04	MS	CHICKASAW COUNTY	2802690004A	08-MAR-2000	99-04-4094A	02
04	MS	FLORENCE, TOWN OF	2801440001B	11-JAN-2000	99-04-173P	05
04	MS	FLOWOOD, TOWN OF	2802890010C	28-JAN-2000	00-04-0026A	01
04	MS	FLOWOOD, TOWN OF	2802890010C	30-MAR-2000	00-04-0426A	01
04	MS	HORN LAKE, CITY OF	28033C0040E	25-APR-2000	00-04-1182A	01
04	MS	JACKSON COUNTY*	2852560050D	18-JAN-2000	00-04-1452X	02
04	MS	JACKSON, CITY OF	2800720015G	14-MAR-2000	99-04-5900A	02
04	MS	JACKSON, CITY OF	2800720015G	30-MAR-2000	00-04-1430A	02
04	MS	JONES COUNTY *	2802220100B	08-FEB-2000	99-04-5896A	02
04	MS	LAUDERDALE COUNTY *	28075C0015C	22-MAR-2000	00-04-2512V	19
04	MS	LAWRENCE COUNTY *	2802720025B	14-MAR-2000	00-04-1554A	02
04	MS	LEE COUNTY *	28081C0155D	13-JAN-2000	99-04-6316A	01
04	MS	LEE COUNTY *	28081C0155D	14-MAR-2000	00-04-2330X	02
04	MS	LEE COUNTY *	28081C0160D	13-APR-2000	00-04-2072A	02
04	MS	LEE COUNTY *	28081C0166D	18-APR-2000	00-04-2280A	02
04	MS	LEFLORE COUNTY *	2801010125B	11-APR-2000	00-04-2090A	02
04	MS	MERIDIAN, CITY OF	28075C0084D	22-MAR-2000	00-04-2700V	19
04	MS	PEARL RIVER COUNTY *	28109C0255D	09-FEB-2000	99-04-6110A	02
04	MS	PEARL RIVER COUNTY *	28109C0264D	09-FEB-2000	00-04-1150A	01
04	MS	PEARL RIVER VALLEY WATER SUPPLY DISTRICT	2803380055B	16-MAY-2000	00-04-2848A	02
04	MS	PEARL RIVER VALLEY WATER SUPPLY DISTRICT	2803380055B	20-JAN-2000	00-04-0676A	01
04	MS	PEARL, CITY OF	2801450005C	28-FEB-2000	98-04-335P	05
04	MS	RANKIN COUNTY *	2801420080C	04-JAN-2000	99-04-5434A	01
04	MS	RANKIN COUNTY *	2801420155B	06-JAN-2000	00-04-0012A	01

Region	State	Community	Map panel	Determination date	Case No.	Type
04	MS	SOUTHHAVEN, CITY OF	28033C0030E	18-APR-2000	00-04-0448A	01
04	MS	STARKVILLE, CITY OF	2801240003C	10-FEB-2000	00-04-0710A	02
04	MS	STARKVILLE, CITY OF	2801240003C	20-JAN-2000	99-04-5810A	01
04	MS	SUMNER, TOWN OF	280194 C	23-MAY-2000	00-04-1738A	02
04	MS	TUPELO, CITY OF	28081C0154D	20-APR-2000	99-04-4898A	17
04	MS	WARREN COUNTY*	2801980050B	09-MAR-2000	00-04-1152A	02
04	MS	WARREN COUNTY*	2801980125C	20-APR-2000	00-04-0094A	02
04	MS	WASHINGTON COUNTY*	2801770145B	14-MAR-2000	00-04-1136A	01
04	MS	WASHINGTON COUNTY*	2801770235B	23-MAY-2000	00-04-2416A	01
04	NC	ALAMANCE COUNTY*	37001C0038E	16-MAY-2000	00-04-1904A	02
04	NC	ALAMANCE COUNTY*	37001C0227E	06-APR-2000	99-04-6080A	02
04	NC	ALBEMARLE, CITY OF	3702230002C	11-MAY-2000	00-04-2292A	02
04	NC	BLADEN COUNTY *	3702930006B	22-FEB-2000	00-04-1328A	02
04	NC	BRUNSWICK COUNTY*	3702950200C	04-APR-2000	00-04-1912A	02
04	NC	BRUNSWICK COUNTY*	3702950300C	22-FEB-2000	00-04-1298A	02
04	NC	BRUNSWICK COUNTY*	3702950360E	16-MAY-2000	00-04-2000A	02
04	NC	BRUNSWICK COUNTY*	3702950360E	28-MAR-2000	00-04-1686A	02
04	NC	BUNCOMBE COUNTY *	37021C0169C	06-JAN-2000	00-04-0388A	02
04	NC	BURLINGTON, CITY OF	37001C0039E	14-MAR-2000	00-04-0064A	01
04	NC	CABARRUS COUNTY *	37025C0115D	24-FEB-2000	99-04-4558A	01
04	NC	CALDWELL COUNTY *	37027C0050D	04-MAY-2000	00-04-2298A	02
04	NC	CALDWELL COUNTY *	37027C0050D	11-APR-2000	00-04-2242A	02
04	NC	CALDWELL COUNTY *	37027C0050D	28-MAR-2000	00-04-1258A	02
04	NC	CARTERET COUNTY *	3700430440C	20-APR-2000	00-04-2476A	02
04	NC	CARTERET COUNTY *	3700430667D	11-MAY-2000	00-04-2734A	01
04	NC	CARY, TOWN OF	37183C0504E	23-MAY-2000	00-04-2602A	01
04	NC	CATAWBA COUNTY *	3700500020C	14-MAR-2000	00-04-1234A	02
04	NC	CATAWBA COUNTY *	3700500030C	25-APR-2000	00-04-2078A	02
04	NC	CATAWBA COUNTY *	3700500040C	13-APR-2000	00-04-2082A	02
04	NC	CATAWBA COUNTY *	3700500200C	01-JUN-2000	00-04-3224A	02
04	NC	CATAWBA COUNTY *	3700500325B	10-FEB-2000	00-04-0930A	02
04	NC	CATAWBA COUNTY *	3700500325B	13-JAN-2000	00-04-0994A	02
04	NC	CATAWBA COUNTY *	3700500325B	20-APR-2000	00-04-2478A	02
04	NC	CATAWBA COUNTY *	3700500325B	25-APR-2000	00-04-1632A	02
04	NC	CATAWBA COUNTY *	3700500325B	27-JAN-2000	00-04-0790A	02
04	NC	CATAWBA COUNTY *	3700500325B	28-MAR-2000	00-04-1862A	02
04	NC	CATAWBA COUNTY *	3700500350C	04-JAN-2000	00-04-0618A	02
04	NC	CATAWBA COUNTY *	3700500350C	07-MAR-2000	00-04-1614A	02
04	NC	CATAWBA COUNTY *	3700500350C	08-FEB-2000	99-04-5348A	02
04	NC	CATAWBA COUNTY *	3700500350C	09-MAY-2000	00-04-2424A	02
04	NC	CATAWBA COUNTY *	3700500350C	11-JAN-2000	00-04-0690A	02
04	NC	CATAWBA COUNTY *	3700500350C	11-JAN-2000	00-04-0772A	02
04	NC	CATAWBA COUNTY *	3700500350C	11-JAN-2000	00-04-0804A	02
04	NC	CATAWBA COUNTY *	3700500350C	16-MAY-2000	00-04-2276A	02
04	NC	CATAWBA COUNTY *	3700500350C	18-APR-2000	00-04-2452A	02
04	NC	CATAWBA COUNTY *	3700500350C	18-JAN-2000	00-04-1128A	02
04	NC	CATAWBA COUNTY *	3700500350C	20-JAN-2000	00-04-0306A	02
04	NC	CATAWBA COUNTY *	3700500350C	20-JAN-2000	99-04-6268A	02
04	NC	CATAWBA COUNTY *	3700500350C	23-MAY-2000	00-04-2938A	02
04	NC	CHAPEL HILL, TOWN OF	3701800004E	01-FEB-2000	00-04-1064A	02
04	NC	CHAPEL HILL, TOWN OF	3701800004E	18-APR-2000	99-04-3240P	05
04	NC	CHARLOTTE, CITY OF	3701590003B	11-MAY-2000	00-04-1282A	02
04	NC	CHARLOTTE, CITY OF	3701590020B	06-JAN-2000	00-04-0038A	02
04	NC	CHARLOTTE, CITY OF	3701590025B	13-JAN-2000	00-04-0826A	01
04	NC	CHARLOTTE, CITY OF	3701590025B	17-FEB-2000	00-04-1308A	01
04	NC	COLUMBUS COUNTY *	3703050225B	02-MAY-2000	00-04-1906A	02
04	NC	CONCORD, CITY OF	37025C0110D	17-FEB-2000	00-04-1280A	01
04	NC	CONCORD, CITY OF	37025C0120D	20-APR-2000	00-04-1250A	01
04	NC	CONCORD, CITY OF	37025C0120D	23-MAY-2000	00-04-2320A	01
04	NC	CORNELIUS, TOWN OF	3704980005A	14-MAR-2000	00-04-2062A	02
04	NC	CORNELIUS, TOWN OF	3704980005A	17-FEB-2000	99-04-6102A	02
04	NC	CORNELIUS, TOWN OF	3704980005A	18-APR-2000	00-04-1930A	02
04	NC	CORNELIUS, TOWN OF	3704980005A	18-MAY-2000	00-04-2832A	02
04	NC	CORNELIUS, TOWN OF	3704980005A	23-MAR-2000	00-04-2060A	02
04	NC	CORNELIUS, TOWN OF	3704980005A	24-FEB-2000	00-04-1058A	02
04	NC	CRAVEN COUNTY*	3700720320B	30-MAR-2000	00-04-1756A	02
04	NC	CUMBERLAND COUNTY *	3700760035B	22-FEB-2000	00-04-0568A	02
04	NC	CUMBERLAND COUNTY *	3700760035B	28-JAN-2000	00-04-0408A	02
04	NC	CUMBERLAND COUNTY *	3700760115B	08-FEB-2000	00-04-1140A	02
04	NC	CURRITUCK COUNTY *	3700780070C	09-MAY-2000	00-04-2572A	02
04	NC	CURRITUCK COUNTY *	3700780365C	09-MAR-2000	00-04-1338A	02
04	NC	DARE COUNTY*	3753480113D	06-JAN-2000	00-04-0722A	02
04	NC	DAVIDSON COUNTY *	3703070150B	01-JUN-2000	00-04-3060A	02

Region	State	Community	Map panel	Determination date	Case No.	Type
04	NC	DAVIDSON COUNTY *	3703070150B	07-MAR-2000	00-04-1078A	02
04	NC	DURHAM COUNTY *	37063C0005G	22-MAR-2000	00-04-2696V	19
04	NC	DURHAM, CITY OF	37063C0054G	04-APR-2000	00-04-2442A	02
04	NC	DURHAM, CITY OF	37063C0054G	22-MAR-2000	00-04-2698V	19
04	NC	ELON COLLEGE, TOWN OF	37001C0082E	11-MAY-2000	00-04-2232A	02
04	NC	FAYETTEVILLE, CITY OF	3700770008C	25-APR-2000	00-04-0402A	01
04	NC	FORSYTH COUNTY *	37067C0115H	03-FEB-2000	00-04-0926A	02
04	NC	FRANKLIN COUNTY*	3703770009A	11-MAY-2000	00-04-1322A	02
04	NC	GASTON COUNTY *	3700990230C	09-MAY-2000	00-04-2900A	02
04	NC	GASTON COUNTY *	3700990310B	11-MAY-2000	00-04-2238A	02
04	NC	GASTONIA, CITY OF	3701000020D	06-JAN-2000	99-04-003P	05
04	NC	GRAHAM, CITY OF	37001C0116E	27-APR-2000	00-04-1028A	02
04	NC	GREENSBORO, CITY OF	3701110111D	17-APR-2000	00-04-061X	06
04	NC	GREENVILLE, CITY OF	3701910005B	23-MAY-2000	00-04-2822A	01
04	NC	GUILFORD COUNTY *	3701110195B	18-JAN-2000	99-04-5504A	02
04	NC	HAVELOCK, CITY OF	3702650008B	24-FEB-2000	00-04-0556A	02
04	NC	HERTFORD COUNTY	3701300006A	02-MAY-2000	00-04-1520A	02
04	NC	HICKORY, CITY OF	3700540005B	03-FEB-2000	00-04-0950A	02
04	NC	HICKORY, CITY OF	3700540005B	22-FEB-2000	00-04-0912A	02
04	NC	HICKORY, CITY OF	3700540010C	16-MAY-2000	00-04-2076A	02
04	NC	HICKORY, CITY OF	3700540010C	16-MAY-2000	00-04-2738A	02
04	NC	HIGH POINT, CITY OF	3701130006C	14-FEB-2000	99-04-6134A	02
04	NC	HIGH POINT, CITY OF	3701130007C	09-MAY-2000	00-04-2654A	02
04	NC	HUDSON, TOWN OF	37027C0085E	16-MAY-2000	00-04-1352A	02
04	NC	INDIAN BEACH, TOWN OF	3704330001B	13-JAN-2000	00-04-0894A	01
04	NC	JACKSONVILLE, CITY OF	3701780009B	09-MAR-2000	00-04-1926A	02
04	NC	LELAND, TOWN OF	3704710005E	07-MAR-2000	00-04-1578A	02
04	NC	LUMBERTON, CITY OF	37155C0178D	01-JUN-2000	00-04-2616A	01
04	NC	LUMBERTON, CITY OF	37155C0179D	18-APR-2000	00-04-1894A	02
04	NC	MADISON COUNTY *	3701520044B	20-APR-2000	00-04-1138A	02
04	NC	MCDOWELL COUNTY*	37111C0175B	18-APR-2000	00-04-0490A	02
04	NC	MECKLENBURG COUNTY *	3701580005D	02-MAR-2000	00-04-1482A	02
04	NC	MECKLENBURG COUNTY *	3701580005D	02-MAY-2000	00-04-2750A	02
04	NC	MECKLENBURG COUNTY *	3701580005D	16-MAY-2000	99-04-4086A	01
04	NC	MECKLENBURG COUNTY *	3701580005D	20-JAN-2000	00-04-1450V	19
04	NC	MECKLENBURG COUNTY *	3701580030C	20-APR-2000	00-04-1546A	02
04	NC	MECKLENBURG COUNTY *	3701580035B	09-MAY-2000	00-04-2620A	17
04	NC	MECKLENBURG COUNTY *	3701580035B	16-MAY-2000	00-04-2934A	02
04	NC	MECKLENBURG COUNTY *	3701580055B	27-JAN-2000	00-04-0206A	01
04	NC	MECKLENBURG COUNTY *	3701580105B	09-APR-2000	98-04-2750P	05
04	NC	MECKLENBURG COUNTY *	3701580175C	14-JAN-2000	98-04-067P	05
04	NC	MECKLENBURG COUNTY *	3701580185B	04-FEB-2000	99-04-5086A	01
04	NC	MECKLENBURG COUNTY *	3701580185B	25-APR-2000	00-04-2520A	02
04	NC	MECKLENBURG COUNTY *	3701580190B	02-MAY-2000	00-04-2460X	01
04	NC	MONTGOMERY COUNTY *	3703360020B	04-APR-2000	00-04-1946A	02
04	NC	MONTGOMERY COUNTY *	3703360025B	01-FEB-2000	00-04-1134A	02
04	NC	MONTGOMERY COUNTY *	3703360025B	01-FEB-2000	00-04-1154A	02
04	NC	MONTGOMERY COUNTY *	3703360025B	01-JUN-2000	00-04-2942A	02
04	NC	MONTGOMERY COUNTY *	3703360025B	01-JUN-2000	00-04-2948A	02
04	NC	MONTGOMERY COUNTY *	3703360025B	01-JUN-2000	00-04-3240A	02
04	NC	MONTGOMERY COUNTY *	3703360025B	03-FEB-2000	00-04-0572A	02
04	NC	MONTGOMERY COUNTY *	3703360025B	06-JAN-2000	00-04-0914A	02
04	NC	MONTGOMERY COUNTY *	3703360025B	07-MAR-2000	00-04-1342A	02
04	NC	MONTGOMERY COUNTY *	3703360025B	08-FEB-2000	00-04-1390A	02
04	NC	MONTGOMERY COUNTY *	3703360025B	09-MAY-2000	00-04-2692A	02
04	NC	MONTGOMERY COUNTY *	3703360025B	09-MAY-2000	00-04-2862A	02
04	NC	MONTGOMERY COUNTY *	3703360025B	11-JAN-2000	00-04-0872A	02
04	NC	MONTGOMERY COUNTY *	3703360025B	11-JAN-2000	00-04-0940A	02
04	NC	MONTGOMERY COUNTY *	3703360025B	11-MAY-2000	00-04-2592A	02
04	NC	MONTGOMERY COUNTY *	3703360025B	15-FEB-2000	00-04-0956A	02
04	NC	MONTGOMERY COUNTY *	3703360025B	17-FEB-2000	00-04-1354A	02
04	NC	MONTGOMERY COUNTY *	3703360025B	18-APR-2000	00-04-2406A	02
04	NC	MONTGOMERY COUNTY *	3703360025B	18-MAY-2000	00-04-2786A	02
04	NC	MONTGOMERY COUNTY *	3703360025B	20-APR-2000	00-04-2296A	02
04	NC	MONTGOMERY COUNTY *	3703360025B	20-JAN-2000	99-04-5262A	02
04	NC	MONTGOMERY COUNTY *	3703360025B	21-MAR-2000	00-04-2494A	02
04	NC	MONTGOMERY COUNTY *	3703360025B	22-FEB-2000	00-04-1600A	02
04	NC	MONTGOMERY COUNTY *	3703360025B	25-APR-2000	00-04-2016A	02
04	NC	MONTGOMERY COUNTY *	3703360025B	28-MAR-2000	00-04-1868A	02
04	NC	MONTGOMERY COUNTY *	3703360055B	01-JUN-2000	00-04-3154A	02
04	NC	MONTGOMERY COUNTY *	3703360055B	11-MAY-2000	00-04-2358A	02
04	NC	MONTGOMERY COUNTY *	3703360065B	11-MAY-2000	00-04-2136A	02
04	NC	MONTGOMERY COUNTY *	3703360065B	11-MAY-2000	00-04-2282A	02

Region	State	Community	Map panel	Determination date	Case No.	Type
04	NC	MONTGOMERY COUNTY *	3703360065B	13-APR-2000	00-04-1810A	02
04	NC	MONTGOMERY COUNTY *	3703360065B	16-MAY-2000	00-04-2204A	02
04	NC	MONTGOMERY COUNTY *	3703360065B	16-MAY-2000	00-04-2958A	02
04	NC	MONTGOMERY COUNTY *	3703360065B	20-APR-2000	00-04-2594A	02
04	NC	MORRISVILLE, TOWN OF	37183C0291E	16-MAY-2000	00-04-2780A	01
04	NC	NEW HANOVER COUNTY*	3701680045E	09-MAY-2000	00-04-3010A	02
04	NC	NEW HANOVER COUNTY*	3701680091E	01-JUN-2000	00-04-2926A	02
04	NC	NEW HANOVER COUNTY*	3701680105D	11-APR-2000	00-04-2376A	02
04	NC	ONSLOW COUNTY*	3703400300C	27-JAN-2000	00-04-0616A	02
04	NC	ONSLOW COUNTY*	3703400305C	11-JAN-2000	00-04-0308A	02
04	NC	ONSLOW COUNTY*	3703400305C	14-MAR-2000	00-04-0746A	02
04	NC	ONSLOW COUNTY*	3703400305C	18-JAN-2000	00-04-0584A	02
04	NC	ONSLOW COUNTY*	3703400305C	18-JAN-2000	00-04-0586A	02
04	NC	ONSLOW COUNTY*	3703400305C	20-JAN-2000	00-04-0614A	02
04	NC	ONSLOW COUNTY*	3703400330C	10-JAN-2000	99-04-3330P	05
04	NC	ONSLOW COUNTY*	3703400367D	04-APR-2000	00-04-1762A	02
04	NC	ORANGE COUNTY *	3703420255B	20-JAN-2000	00-04-0558A	02
04	NC	PENDER COUNTY*	3703440155B	11-APR-2000	00-04-2356A	02
04	NC	PENDER COUNTY*	3703440285B	02-MAR-2000	00-04-1634A	02
04	NC	PENDER COUNTY*	3703440315B	01-FEB-2000	00-04-0920A	17
04	NC	PENDER COUNTY*	3703440411B	01-FEB-2000	00-04-0524A	02
04	NC	PENDER COUNTY*	3703440527C	27-JAN-2000	00-04-0272A	02
04	NC	PERQUIMANS COUNTY	3703150110B	11-APR-2000	00-04-1102A	02
04	NC	PITT COUNTY *	3703720260C	09-MAR-2000	00-04-0814A	02
04	NC	RALEIGH, CITY OF	37183C0329E	20-MAR-2000	99-04-279P	05
04	NC	RALEIGH, CITY OF	37183C0352E	06-JAN-2000	00-04-0006A	01
04	NC	RALEIGH, CITY OF	37183C0352E	09-FEB-2000	99-04-5438A	01
04	NC	RALEIGH, CITY OF	37183C0352E	14-MAR-2000	00-04-0980A	01
04	NC	RANDOLPH COUNTY *	3701950150B	16-MAY-2000	00-04-3490A	02
04	NC	RICHLANDS, TOWN OF	370341 A	08-MAR-2000	99-04-6280A	02
04	NC	RIVER BEND, TOWN OF	3704320002B	02-FEB-2000	00-04-0168A	02
04	NC	ROBESON COUNTY *	37155C0178D	08-FEB-2000	00-04-0766A	01
04	NC	ROBESON COUNTY *	37155C0190D	27-JAN-2000	99-04-6034A	01
04	NC	RUTHERFORD COUNTY*	3702170004B	05-APR-2000	00-04-1108A	02
04	NC	RUTHERFORD COUNTY*	3702170004B	25-APR-2000	00-04-0888A	02
04	NC	SOUTHERN SHORES, TOWN OF	3704300001C	04-MAY-2000	00-04-2312A	01
04	NC	SPARTA, TOWN OF	370005 B	14-MAR-2000	00-04-0110A	01
04	NC	STANLY COUNTY *	3703610050B	28-MAR-2000	00-04-1758A	02
04	NC	STANLY COUNTY *	3703610100B	18-APR-2000	00-04-2434A	02
04	NC	TRENT WOODS, TOWNSHIP OF	3704340001B	02-MAY-2000	00-04-2534A	02
04	NC	TRENT WOODS, TOWNSHIP OF	3704340001B	13-JAN-2000	00-04-0948A	02
04	NC	VALDESE, TOWN OF	3702980002A	07-MAR-2000	00-04-0328A	02
04	NC	WARREN COUNTY*	3703960002B	11-MAY-2000	00-04-2240A	02
04	NC	WARREN COUNTY*	3703960002B	23-MAY-2000	00-04-2898A	02
04	NC	WAYNESVILLE, TOWN OF	3701240002B	22-FEB-2000	00-04-1056A	01
04	SC	AIKEN, CITY OF	4500030005B	16-MAR-2000	99-04-6242A	02
04	SC	BEAUFORT COUNTY*	4500250095D	16-MAY-2000	00-04-1650A	02
04	SC	BENNETTSVILLE, CITY OF	4501470005B	11-APR-2000	00-04-1042A	02
04	SC	BERKELEY COUNTY *	4500290290C	18-MAY-2000	00-04-2912A	02
04	SC	BERKELEY COUNTY *	4500290355C	01-JUN-2000	00-04-2020A	02
04	SC	BERKELEY COUNTY *	4500290355C	18-MAY-2000	00-04-2844A	02
04	SC	CHARLESTON COUNTY*	4554130227F	11-APR-2000	00-04-2230A	02
04	SC	CHARLESTON COUNTY*	4554130425F	08-FEB-2000	00-04-0908A	02
04	SC	EDGEFIELD COUNTY *	4502290145C	09-FEB-2000	99-04-6184A	02
04	SC	GREENWOOD COUNTY*	4500940150B	25-APR-2000	00-04-0632A	02
04	SC	HORRY COUNTY *	45051C0582H	27-JAN-2000	00-04-1574A	02
04	SC	IRMO, TOWN OF	45063C0127G	10-FEB-2000	00-04-1408V	19
04	SC	KERSHAW COUNTY *	4501150250B	09-MAR-2000	00-04-1382A	02
04	SC	LEXINGTON COUNTY *	45063C0050G	10-FEB-2000	00-04-1722V	19
04	SC	LEXINGTON COUNTY *	45063C0050G	23-MAY-2000	00-04-3148A	02
04	SC	LEXINGTON, TOWN OF	45063C0138G	10-FEB-2000	00-04-1414V	19
04	SC	NEWBERRY COUNTY*	4502240225B	18-APR-2000	00-04-1928A	02
04	SC	NEWBERRY COUNTY*	4502240225B	20-JAN-2000	00-04-1072A	02
04	SC	NEWBERRY COUNTY*	4502240225B	21-MAR-2000	00-04-2006A	02
04	SC	NORTH MYRTLE BEACH, TOWN OF	45051C0601H	02-MAY-2000	00-04-2596A	02
04	SC	RICHLAND COUNTY*	45079C0025G	02-MAR-2000	00-04-1024A	02
04	SC	RICHLAND COUNTY*	45079C0025G	04-JAN-2000	99-04-6074A	02
04	SC	RICHLAND COUNTY*	45079C0025G	07-MAR-2000	00-04-1440A	02
04	SC	RICHLAND COUNTY*	45079C0080J	15-FEB-2000	00-04-0996A	02
04	SC	ROCK HILL, CITY OF	4501960006C	27-APR-2000	99-04-5996A	01
04	SC	SPRINGDALE, TOWN OF	45063C0257G	10-FEB-2000	00-04-1410V	19
04	SC	SUMTER COUNTY *	4501820090C	13-APR-2000	00-04-2234A	02
04	SC	SUMTER COUNTY *	4501820090C	14-MAR-2000	00-04-1684A	02

Region	State	Community	Map panel	Determination date	Case No.	Type
04	SC	SUMTER COUNTY *	4501820090C	21-MAR-2000	00-04-1646A	02
04	SC	SUMTER COUNTY *	4501820100B	16-MAY-2000	00-04-2374A	02
04	SC	SUMTER COUNTY *	4501820180C	14-MAR-2000	00-04-1962A	02
04	SC	SUMTER COUNTY *	4501820180C	25-MAY-2000	00-04-3356A	02
04	SC	WEST COLUMBIA, CITY OF	45051C0630H	10-FEB-2000	00-04-1412V	19
04	SC	YORK COUNTY *	4501930125C	27-APR-2000	00-04-2954A	02
04	SC	YORK, CITY OF	4501970001B	09-MAY-2000	00-04-2772A	02
04	SC	YORK, CITY OF	4501970001B	16-MAY-2000	00-04-2770A	02
04	SC	YORK, CITY OF	4501970001B	16-MAY-2000	00-04-2846A	02
04	TN	ANDERSON COUNTY *	4702170064C	16-MAY-2000	00-04-1736A	01
04	TN	ARLINGTON, TOWNSHIP OF	47157C0120E	18-JAN-2000	00-04-0102A	01
04	TN	BENTON COUNTY	4702180025B	04-APR-2000	00-04-1808A	02
04	TN	BLOUNT COUNTY *	4703560125B	06-JAN-2000	00-04-0886A	02
04	TN	BRENTWOOD, CITY OF	4702050005C	01-JUN-2000	00-04-2086A	02
04	TN	BRENTWOOD, CITY OF	4702050005C	02-MAY-2000	00-04-0290A	01
04	TN	BRENTWOOD, CITY OF	4702050005C	11-APR-2000	00-04-1674A	01
04	TN	BRENTWOOD, CITY OF	4702050005C	11-MAY-2000	00-04-2518A	01
04	TN	BRENTWOOD, CITY OF	4702050005C	12-JAN-2000	00-04-0720A	02
04	TN	BRENTWOOD, CITY OF	4702050010C	28-JAN-2000	00-04-0818A	02
04	TN	CARTER COUNTY *	47019C0100C	10-FEB-2000	00-04-1238A	02
04	TN	CHATTANOOGA, CITY OF	4700720017E	02-FEB-2000	99-04-5356A	02
04	TN	CHATTANOOGA, CITY OF	4700720017E	04-MAY-2000	00-04-2630A	01
04	TN	CHATTANOOGA, CITY OF	4700720028D	04-APR-2000	99-04-4310A	01
04	TN	CLARKSVILLE, CITY OF	4701370008C	25-FEB-2000	99-04-5648A	02
04	TN	DECATUR COUNTY*	4700410004B	17-FEB-2000	00-04-1568A	02
04	TN	DUNLAP, CITY OF	4702700002B	20-JAN-2000	99-04-5902A	01
04	TN	EAGLEVILLE, CITY OF	47149C0335E	01-JUN-2000	00-04-2498A	01
04	TN	EAST RIDGE, CITY OF	4754240010D	10-FEB-2000	00-04-1652A	02
04	TN	FAYETTEVILLE, CITY OF	47103C0166C	18-FEB-2000	00-04-035P	05
04	TN	FRANKLIN COUNTY *	4703440175B	30-MAR-2000	00-04-0992A	02
04	TN	FRANKLIN, CITY OF	4702060007D	18-FEB-2000	00-04-1500A	02
04	TN	GERMANTOWN, CITY OF	47157C0235E	09-MAY-2000	00-04-2940A	02
04	TN	GERMANTOWN, CITY OF	47157C0235E	27-JAN-2000	00-04-0068A	01
04	TN	HARDIN COUNTY*	4700820075C	07-MAR-2000	00-04-1760A	02
04	TN	HARDIN COUNTY*	4700820075C	13-APR-2000	00-04-1856A	02
04	TN	JACKSON, CITY OF	47113C0161D	24-FEB-2000	00-04-1626A	02
04	TN	LOUDON COUNTY*	4701070075B	11-APR-2000	00-04-1998A	02
04	TN	MARSHALL COUNTY*	47117C0100C	02-MAY-2000	00-04-1916A	02
04	TN	MEMPHIS, CITY OF	47157C0170E	06-JAN-2000	00-04-0342A	02
04	TN	MEMPHIS, CITY OF	47157C0185E	02-MAY-2000	00-04-2876A	02
04	TN	MEMPHIS, CITY OF	47157C0185E	25-MAY-2000	00-04-1444A	01
04	TN	MEMPHIS, CITY OF	47157C0230E	01-FEB-2000	00-04-0076A	02
04	TN	MEMPHIS, CITY OF	47157C0230E	02-MAY-2000	00-04-2484A	02
04	TN	MEMPHIS, CITY OF	47157C0230E	18-FEB-2000	00-04-1498A	02
04	TN	MEMPHIS, CITY OF	47157C0230E	21-MAR-2000	00-04-1800A	02
04	TN	MEMPHIS, CITY OF	47157C0230E	30-MAR-2000	00-04-1798A	02
04	TN	MEMPHIS, CITY OF	47157C0230E	30-MAR-2000	00-04-1802A	02
04	TN	MONROE COUNTY	4702330025B	06-APR-2000	00-04-2350A	01
04	TN	MURFREESBORO, CITY OF	47149C0259F	03-JAN-2000	00-04-0796A	02
04	TN	MURFREESBORO, CITY OF	47149C0260F	05-JAN-2000	99-04-4106A	01
04	TN	MURFREESBORO, CITY OF	47149C0260F	08-FEB-2000	99-04-5812A	01
04	TN	NASHVILLE, CITY OF & DAVIDSON COUNTY	4700400100B	14-MAR-2000	00-04-2562A	02
04	TN	NASHVILLE, CITY OF & DAVIDSON COUNTY	4700400100B	28-MAR-2000	00-04-2736A	02
04	TN	NASHVILLE, CITY OF & DAVIDSON COUNTY	4700400131B	22-FEB-2000	99-04-6126A	02
04	TN	NASHVILLE, CITY OF & DAVIDSON COUNTY	4700400177B	01-JUN-2000	00-04-2344A	01
04	TN	NASHVILLE, CITY OF & DAVIDSON COUNTY	4700400177B	02-MAR-2000	00-04-1620A	01
04	TN	NASHVILLE, CITY OF & DAVIDSON COUNTY	4700400177B	02-MAR-2000	00-04-1622A	01
04	TN	NASHVILLE, CITY OF & DAVIDSON COUNTY	4700400177B	02-MAR-2000	00-04-1624A	01
04	TN	NASHVILLE, CITY OF & DAVIDSON COUNTY	4700400177B	02-MAR-2000	00-04-1662A	01
04	TN	NASHVILLE, CITY OF & DAVIDSON COUNTY	4700400192C	03-JAN-2000	00-04-0822A	01
04	TN	NASHVILLE, CITY OF & DAVIDSON COUNTY	4700400192C	04-JAN-2000	00-04-0248A	01
04	TN	NASHVILLE, CITY OF & DAVIDSON COUNTY	4700400192C	04-JAN-2000	00-04-0604A	01
04	TN	NASHVILLE, CITY OF & DAVIDSON COUNTY	4700400192C	09-MAR-2000	00-04-1660A	01
04	TN	NASHVILLE, CITY OF & DAVIDSON COUNTY	4700400192C	25-MAY-2000	00-04-1952A	01
04	TN	NASHVILLE, CITY OF & DAVIDSON COUNTY	4700400203C	07-JAN-2000	00-04-0820A	01
04	TN	NASHVILLE, CITY OF & DAVIDSON COUNTY	4700400244B	19-JAN-2000	00-04-0658A	02
04	TN	NASHVILLE, CITY OF & DAVIDSON COUNTY	4700400253B	11-APR-2000	00-04-0596A	01
04	TN	NASHVILLE, CITY OF & DAVIDSON COUNTY	4700400262C	30-MAY-2000	00-04-2168A	02
04	TN	NASHVILLE, CITY OF & DAVIDSON COUNTY	4700400281C	14-JAN-2000	00-04-0574A	02
04	TN	NASHVILLE, CITY OF & DAVIDSON COUNTY	4700400281C	25-FEB-2000	00-04-1744X	02
04	TN	OLIVER SPRINGS, TOWN OF	4700050003B	16-MAY-2000	00-04-2662A	02
04	TN	RIPLEY, TOWN OF	4701000004C	13-APR-2000	00-04-1850A	02
04	TN	RUTHERFORD COUNTY *	47149C0137E	02-MAR-2000	00-04-1648A	02

Region	State	Community	Map panel	Determination date	Case No.	Type
04	TN	RUTHERFORD COUNTY *	47149C0255F	15-FEB-2000	00-04-0410A	02
04	TN	SHELBY COUNTY *	47157C0060E	04-APR-2000	00-04-2440A	02
04	TN	SHELBY COUNTY *	47157C0200E	05-APR-2000	99-04-5932A	01
04	TN	SHELBY COUNTY *	47157C0240E	07-FEB-2000	99-04-4992A	01
04	TN	SHELBY COUNTY *	47157C0280E	08-FEB-2000	00-04-0458A	01
04	TN	SHELBY COUNTY *	47157C0280E	27-JAN-2000	00-04-0460A	02
04	TN	SMYRNA, TOWN OF	47149C0102E	01-JUN-2000	00-04-1966A	01
04	TN	SMYRNA, TOWN OF	47149C0104E	09-MAY-2000	00-04-1990A	01
04	TN	SMYRNA, TOWN OF	47149C0106E	09-MAR-2000	00-04-0832A	02
04	VA	FRONT ROYAL, TOWN OF	5101670003B	27-JAN-2000	99-03-007P	05
05	IL	ALTON, CITY OF	1704370005C	26-MAY-2000	00-05-2632A	02
05	IL	ANTIOCH, VILLAGE OF	17097C0026F	20-JAN-2000	00-05-0544A	02
05	IL	BELLWOOD, VILLAGE OF	1700610001B	14-MAR-2000	00-05-1970A	02
05	IL	BENSENVILLE, VILLAGE OF	1702000002C	09-MAR-2000	00-05-0588A	01
05	IL	BLOOMINGTON, CITY OF	1704900005C	27-APR-2000	00-05-2290A	02
05	IL	BOLINGBROOK, VILLAGE OF	17197C0045F	25-MAY-2000	00-05-1706A	01
05	IL	BRAIDWOOD, CITY OF	17197C0415E	06-APR-2000	00-05-1980A	02
05	IL	BUFFALO GROVE, VILLAGE OF	17097C0261F	06-APR-2000	00-05-1928A	02
05	IL	BUFFALO GROVE, VILLAGE OF	17097C0261F	24-FEB-2000	00-05-0094A	02
05	IL	BUFFALO GROVE, VILLAGE OF	17097C0262F	06-APR-2000	00-05-2566A	17
05	IL	BURR RIDGE, VILLAGE OF	1700710003B	12-JAN-2000	99-05-6726A	01
05	IL	CAHOKIA, VILLAGE OF	1706200005C	25-MAY-2000	00-05-2486A	02
05	IL	CARMI, CITY OF	1706810005B	25-APR-2000	00-05-2526A	02
05	IL	CARMI, CITY OF	1706810005B	28-JUN-2000	00-05-4016A	02
05	IL	CARMI, CITY OF	1706810005B	21-JAN-2000	00-05-0700A	02
05	IL	CARROLL COUNTY *	1700190075B	04-FEB-2000	00-05-0940A	02
05	IL	CARROLL COUNTY *	1700190075B	07-MAR-2000	00-05-2312A	02
05	IL	CHAMPAIGN COUNTY *	1708940175B	04-FEB-2000	99-05-4962A	02
05	IL	CHAMPAIGN COUNTY *	1708940205B	02-FEB-2000	00-05-1362A	02
05	IL	CHAMPAIGN COUNTY *	1708940205B	14-MAR-2000	00-05-1424A	02
05	IL	CHAMPAIGN COUNTY *	1708940205B	14-MAR-2000	99-05-6164A	02
05	IL	CHAMPAIGN COUNTY *	1708940205B	21-MAR-2000	00-05-1464A	02
05	IL	CHAMPAIGN, CITY OF	1700260010B	07-FEB-2000	00-05-1420A	02
05	IL	CHAMPAIGN, CITY OF	1708940180B	12-MAY-2000	00-05-2764X	02
05	IL	CHICAGO HEIGHTS, CITY OF	1700750005B	11-FEB-2000	00-05-2006A	02
05	IL	CLINTON COUNTY*	170044 B	04-FEB-2000	99-05-7004A	02
05	IL	CLINTON COUNTY*	170044 B	16-MAY-2000	00-05-1806A	02
05	IL	CLINTON, CITY OF	17039C0190D	13-APR-2000	00-05-2572A	02
05	IL	COLES COUNTY *	1709860125B	07-MAR-2000	00-05-1076A	02
05	IL	COOK COUNTY *	1700540040B	22-FEB-2000	99-05-6086A	02
05	IL	COOK COUNTY *	1700540195B	16-MAY-2000	99-05-335A	17
05	IL	COOK COUNTY *	1700540215B	22-MAR-2000	00-05-1276A	02
05	IL	COOK COUNTY	1700540050B	30-JUN-2000	00-05-4354A	02
05	IL	CRESTWOOD, VILLAGE OF	1700800001E	24-MAY-2000	00-05-2326A	02
05	IL	CRYSTAL LAKE, CITY OF	1704760001C	25-APR-2000	00-05-2244A	02
05	IL	DECATUR, CITY OF	1704290005C	29-FEB-2000	00-05-1468A	02
05	IL	DEERFIELD, VILLAGE OF	17097C0286F	27-APR-2000	00-05-1772A	01
05	IL	DES PLAINES, CITY OF	1700810005C	02-FEB-2000	99-05-7152A	02
05	IL	DOWNERS GROVE, VILLAGE OF	1702040004B	09-FEB-2000	00-05-0618A	02
05	IL	DOWNERS GROVE, VILLAGE OF	1702040004B	16-FEB-2000	00-05-0076A	02
05	IL	DOWNERS GROVE, VILLAGE OF	1702040004B	30-MAY-2000	00-05-2492A	02
05	IL	DU PAGE COUNTY*	1701970010C	16-MAY-2000	00-05-2020A	02
05	IL	DU PAGE COUNTY*	1701970010C	25-MAY-2000	00-05-1274A	02
05	IL	DU PAGE COUNTY*	1701970035B	02-MAY-2000	00-05-2558A	02
05	IL	DU PAGE COUNTY*	1701970065B	03-MAR-2000	99-05-189P	05
05	IL	EFFINGHAM COUNTY *	1702270002A	27-APR-2000	00-05-1160A	02
05	IL	EFFINGHAM, CITY OF	170229 B	27-APR-2000	00-05-0702A	02
05	IL	FOX LAKE, VILLAGE OF	17097C0015F	15-MAR-2000	00-05-1982A	02
05	IL	FOX LAKE, VILLAGE OF	17097C0015F	21-JAN-2000	00-05-0882A	02
05	IL	FOX LAKE, VILLAGE OF	17097C0020F	09-MAY-2000	00-05-0568A	02
05	IL	FREEPORT, CITY OF	170640H&101	28-JUN-2000	00-05-2834A	02
05	IL	FRANKFORT, VILLAGE OF	17197C0310E	03-FEB-2000	99-05-6620P	05
05	IL	FRANKFORT, VILLAGE OF	17197C0326E	22-JAN-2000	99-05-165P	05
05	IL	FRANKFORT, VILLAGE OF	17197C0327E	22-JAN-2000	99-05-165P	.....
05	IL	GALENA, CITY OF	175168 A	28-JAN-2000	00-05-0392A	02
05	IL	GALESBURG, CITY OF	1703490006B	02-FEB-2000	99-05-6998A	02
05	IL	GARDNER, VILLAGE OF	1702610005C	15-FEB-2000	00-05-0290A	02
05	IL	GARDNER, VILLAGE OF	1702610005C	15-FEB-2000	00-05-1484A	02
05	IL	GARDNER, VILLAGE OF	1702610005C	18-APR-2000	00-05-2134A	02
05	IL	GENOA, CITY OF	170183 B	28-MAR-2000	00-05-2458A	02
05	IL	GENOA, CITY OF	170183 B	31-MAY-2000	00-05-2456A	02
05	IL	GENOA, CITY OF	170183 B	31-MAY-2000	00-05-2460A	02
05	IL	GERMANTOWN, VILLAGE OF	170049 B	28-JAN-2000	00-05-0364A	02

Region	State	Community	Map panel	Determination date	Case No.	Type
05	IL	GLENDALE HEIGHTS, VILLAGE OF	1702060001C	04-APR-2000	00-05-1818A	17
05	IL	GLENVIEW, VILLAGE OF	1700960008C	28-JAN-2000	99-05-6162A	02
05	IL	GRUNDY COUNTY *	1702560045C	13-APR-2000	00-05-1764A	02
05	IL	GRUNDY COUNTY *	1702560045C	17-MAY-2000	00-05-2444A	17
05	IL	GRUNDY COUNTY *	1702560060C	02-MAR-2000	00-05-0650A	02
05	IL	GURNEE, VILLAGE OF	17097C0063F	09-MAR-2000	99-05-7354A	01
05	IL	HENRY COUNTY *	1707390100B	04-APR-2000	00-05-1912A	17
05	IL	HIGHLAND PARK, CITY OF	17097C0279F	07-MAR-2000	00-05-1052A	02
05	IL	HIGHLAND PARK, CITY OF	17097C0279F	29-FEB-2000	00-05-1072A	02
05	IL	HOFFMAN ESTATES, VILLAGE OF	1701070007C	16-MAY-2000	00-05-2398A	02
05	IL	HOFFMAN ESTATES, VILLAGE OF	1701070008B	22-JAN-2000	00-05-0470A	02
05	IL	HOFFMAN ESTATES, VILLAGE OF	1701070008B	28-MAR-2000	00-05-2552A	02
05	IL	HOLIDAY HILLS, VILLAGE OF	1709360001B	09-FEB-2000	00-05-0646A	02
05	IL	HOLIDAY HILLS, VILLAGE OF	1709360001B	16-FEB-2000	99-05-7302A	02
05	IL	HUNTLEY, VILLAGE OF	1704800004C	18-FEB-2000	00-05-1886X	01
05	IL	INDIAN HEAD PARK, VILLAGE OF	1701100001B	03-FEB-2000	00-05-007P	05
05	IL	ISLAND LAKE, VILLAGE OF	1703700001B	31-JAN-2000	00-05-1554A	17
05	IL	JOLIET, CITY OF	17197C0135F	02-MAY-2000	00-05-1774A	02
05	IL	JOLIET, CITY OF	17197C0135F	07-JAN-2000	00-05-0422A	01
05	IL	JOLIET, CITY OF	17197C0135F	21-JAN-2000	00-05-0456A	01
05	IL	JOLIET, CITY OF	17197C0141E	09-MAR-2000	99-05-047P	05
05	IL	JOLIET, CITY OF	17197C0141E	17-FEB-2000	00-05-141P	06
05	IL	JOLIET, CITY OF	17197C0144E	09-MAR-2000	00-05-0798A	02
05	IL	KANE COUNTY *	1708960102B	07-MAR-2000	00-05-1018A	02
05	IL	KANKAKEE COUNTY *	1703360160C	18-APR-2000	00-05-1150A	02
05	IL	KANKAKEE COUNTY *	1703360185C	02-MAY-2000	00-05-0884A	02
05	IL	KANKAKEE COUNTY *	1703360190C	02-FEB-2000	99-05-6328A	02
05	IL	KANKAKEE COUNTY *	1703360190C	18-APR-2000	00-05-1948A	02
05	IL	KANKAKEE, CITY OF	1703390005C	24-FEB-2000	99-05-7100A	17
05	IL	KENDALL COUNTY *	1703410055C	14-MAR-2000	00-05-1090A	02
05	IL	LAKE COUNTY *	17097C0010F	02-MAY-2000	00-05-2198A	02
05	IL	LAKE COUNTY *	17097C0010F	17-MAY-2000	00-05-2070A	02
05	IL	LAKE COUNTY *	17097C0010F	28-MAR-2000	00-05-1556A	02
05	IL	LAKE COUNTY *	17097C0020F	24-FEB-2000	00-05-1030A	02
05	IL	LAKE COUNTY *	17097C0028F	13-APR-2000	00-05-1904A	02
05	IL	LAKE COUNTY *	17097C0105G	25-APR-2000	00-05-1270A	02
05	IL	LAKE COUNTY *	17097C0110G	21-MAR-2000	00-05-1688X	02
05	IL	LAKE COUNTY *	17097C0118F	21-MAR-2000	00-05-1022A	01
05	IL	LAKE COUNTY *	17097C0127F	05-APR-2000	00-05-1974A	02
05	IL	LAKE FOREST, CITY OF	17097C0257F	10-FEB-2000	00-05-0474A	17
05	IL	LAKE FOREST, CITY OF	17097C0276F	10-FEB-2000	00-05-1868A	02
05	IL	LAKE FOREST, CITY OF	17097C0277F	25-MAY-2000	00-05-0612A	17
05	IL	LANSING, VILLAGE OF	1701160005D	11-APR-2000	00-05-1502A	02
05	IL	LANSING, VILLAGE OF	1701160005D	14-JAN-2000	00-05-0900A	02
05	IL	LANSING, VILLAGE OF	1701160005D	16-MAR-2000	00-05-1304A	02
05	IL	LEE COUNTY*	17103C0100D	09-MAR-2000	00-05-0570A	02
05	IL	LEE COUNTY*	17103C0150D	14-MAR-2000	00-05-2574A	02
05	IL	LINDENHURST, VILLAGE OF	17097C0041F	16-MAR-2000	00-05-1684A	02
05	IL	LINDENHURST, VILLAGE OF	17097C0041F	24-MAY-2000	00-05-2074A	02
05	IL	LIVINGSTON COUNTY	1709290010A	06-JUN-2000	00-05-2984A	02
05	IL	LOGAN COUNTY *	17107C0250C	15-FEB-2000	99-05-7374A	02
05	IL	LOMBARD, VILLAGE OF	1702120005B	01-JAN-2000	99-05-273P	05
05	IL	LYNWOOD, VILLAGE OF	1701190005C	01-JUN-2000	00-05-2144A	01
05	IL	LYNWOOD, VILLAGE OF	1701190005C	29-FEB-2000	00-05-0822A	01
05	IL	MADISON COUNTY *	1704360050B	09-FEB-2000	00-05-0270A	02
05	IL	MADISON COUNTY *	1704360085B	15-FEB-2000	00-05-0494A	02
05	IL	MADISON COUNTY *	1704360090B	21-JAN-2000	00-05-0328A	02
05	IL	MADISON COUNTY *	1704360105B	07-MAR-2000	00-05-1048A	02
05	IL	MADISON COUNTY *	1704360110B	14-JAN-2000	99-05-6350A	02
05	IL	MADISON COUNTY	1704360085B	23-JUN-2000	00-05-3356A	02
05	IL	MANTENO, VILLAGE OF	1708780001A	11-APR-2000	99-05-7336A	01
05	IL	MASON CITY, CITY OF	170466 C	04-APR-2000	00-05-1792A	02
05	IL	MASON CITY, CITY OF	170466 C	06-APR-2000	00-05-1988A	02
05	IL	MCHENRY COUNTY*	1707320025B	20-APR-2000	00-05-1784A	01
05	IL	MCHENRY COUNTY*	1707320090B	07-FEB-2000	00-05-1720X	02
05	IL	MCHENRY COUNTY*	1707320090B	07-JAN-2000	99-05-6790A	02
05	IL	MCHENRY COUNTY*	1707320115B	19-MAY-2000	00-05-2246A	02
05	IL	MCHENRY COUNTY*	1707320115B	28-MAR-2000	00-05-0582A	02
05	IL	MCHENRY COUNTY*	1707320240B	27-APR-2000	99-05-5892A	17
05	IL	MCHENRY COUNTY*	1707320355B	02-MAY-2000	99-05-4316A	02
05	IL	MCHENRY COUNTY*	1707320355B	28-MAR-2000	00-05-0964A	02
05	IL	MERRIONETTE PARK, VILLAGE OF	170126 B	04-APR-2000	00-05-0518A	02
05	IL	MIDLOTHIAN, VILLAGE OF	1701270001C	25-MAY-2000	00-05-1640A	01

Region	State	Community	Map panel	Determination date	Case No.	Type
05	IL	MILAN, VILLAGE OF	1705900001D	07-MAR-2000	00-05-0442A	17
05	IL	MONROE COUNTY*	1705090035D	30-MAY-2000	00-05-2662A	02
05	IL	MONROE COUNTY*	1705090055D	07-MAR-2000	99-05-6902A	02
05	IL	MORRIS, CITY OF	1702630005C	21-MAR-2000	00-05-0794A	02
05	IL	MORRISON, CITY OF	1706910001B	11-MAY-2000	00-05-2394A	02
05	IL	MOUNT PROSPECT, VILLAGE OF	1701290010B	11-MAY-2000	00-05-2364A	02
05	IL	MOUNT PROSPECT, VILLAGE OF	1701290010B	19-MAY-2000	00-05-2402A	02
05	IL	MOUNT PROSPECT, VILLAGE OF	1701290010B	24-MAY-2000	00-05-2466A	02
05	IL	MOUNT PROSPECT, VILLAGE OF	1701290010B	25-APR-2000	00-05-2240A	02
05	IL	MUNDELEIN, VILLAGE OF	17097C0139F	02-MAR-2000	00-05-2174X	01
05	IL	NAPERVILLE, CITY OF	1702130015C	14-MAR-2000	99-05-175P	.....
05	IL	NAPERVILLE, CITY OF	1702130016C	14-MAR-2000	99-05-175P	05
05	IL	NAPERVILLE, CITY OF	1702130020C	04-MAY-2000	00-05-069P	05
05	IL	NAPERVILLE, CITY OF	1702130020C	14-MAR-2000	99-05-175P	.....
05	IL	NAPERVILLE, CITY OF	1702130021C	14-MAR-2000	99-05-175P	.....
05	IL	NAPERVILLE, CITY OF	17197C0030E	07-JAN-2000	00-05-033P	05
05	IL	NEBO, VILLAGE OF	1705540001C	14-JAN-2000	99-05-7084A	02
05	IL	NEW LENOX, VILLAGE OF	17197C0305E	14-JAN-2000	00-05-0840A	02
05	IL	OAK FOREST, CITY OF	1701360005C	11-FEB-2000	99-05-7162A	02
05	IL	OAK FOREST, CITY OF	1701360005C	14-JAN-2000	99-05-6976A	02
05	IL	ORLAND PARK, VILLAGE OF	1701400003D	16-FEB-2000	00-05-089P	05
05	IL	ORLAND PARK, VILLAGE OF	1701400005D	16-FEB-2000	00-05-089P	.....
05	IL	ORLAND PARK, VILLAGE OF	1701400005D	30-MAY-2000	00-05-0566A	02
05	IL	PALATINE, VILLAGE OF	1751700005B	09-FEB-2000	00-05-1344A	02
05	IL	PALATINE, VILLAGE OF	1751700005B	23-MAY-2000	00-05-3690A	02
05	IL	PALOS HILLS, CITY OF	1701430003C	04-APR-2000	00-05-1828A	17
05	IL	PALOS HILLS, CITY OF	1701430003C	14-JAN-2000	99-05-5454A	01
05	IL	PARK CITY, CITY OF	17097C0157F	11-APR-2000	99-05-6390A	01
05	IL	PARK CITY, CITY OF	17097C0157F	21-MAR-2000	99-05-7402A	17
05	IL	PEORIA COUNTY *	1705330125B	10-FEB-2000	00-05-0896A	17
05	IL	PEORIA COUNTY *	1705330125B	14-MAR-2000	00-05-1466A	02
05	IL	PEORIA COUNTY *	1705330150B	19-JAN-2000	00-05-0202A	02
05	IL	PEORIA, CITY OF	1705360015B	12-APR-2000	00-05-1602A	17
05	IL	PIATT COUNTY		28-JUN-2000	00-05-2952A	02
05	IL	PLAINFIELD, VILLAGE OF	17197C0045F	07-JAN-2000	00-05-1476A	01
05	IL	PLAINFIELD, VILLAGE OF	17197C0127E	09-MAR-2000	00-05-1002A	01
05	IL	PLAINFIELD, VILLAGE OF	17197C0135F	30-MAY-2000	00-05-2814A	02
05	IL	PROSPECT HEIGHTS, CITY OF	1709190005C	11-FEB-2000	00-05-0426A	02
05	IL	PROSPECT HEIGHTS, CITY OF	1709190005C	16-FEB-2000	00-05-0762A	02
05	IL	ROCK ISLAND COUNTY*	1705820025B	24-FEB-2000	00-05-1694A	02
05	IL	ROCK ISLAND COUNTY*	1705820025B	28-MAR-2000	00-05-1170A	02
05	IL	ROCK ISLAND COUNTY*	1705820025B	28-MAR-2000	00-05-1244A	02
05	IL	ROCK ISLAND COUNTY*	1705820025B	28-MAR-2000	00-05-1564A	02
05	IL	ROCK ISLAND COUNTY*	1705820100C	29-FEB-2000	99-05-6650A	02
05	IL	ROCK ISLAND COUNTY*	1705820125B	04-APR-2000	99-05-6354A	17
05	IL	ROCK ISLAND COUNTY*	1705820125B	19-MAY-2000	00-05-2080A	02
05	IL	ROMEOVILLE, VILLAGE OF	17197C0065F	25-APR-2000	00-05-0344A	02
05	IL	ROUND LAKE, VILLAGE OF	17097C0127F	07-MAR-2000	00-05-0284A	02
05	IL	SCHAUMBURG, VILLAGE OF	1701580005D	01-FEB-2000	99-05-279P	05
05	IL	SCHILLER PARK, VILLAGE OF	1701590005B	09-MAR-2000	00-05-1432A	02
05	IL	SCHILLER PARK, VILLAGE OF	1701590005B	11-APR-2000	99-05-5760A	02
05	IL	SCHILLER PARK, VILLAGE OF	1701590005B	14-MAR-2000	00-05-1434A	02
05	IL	SCHILLER PARK, VILLAGE OF	1701590005B	14-MAR-2000	00-05-1972A	02
05	IL	SHOREWOOD,VILLAGE OF	17197C0139E	10-MAY-2000	00-05-101P	05
05	IL	SHOREWOOD,VILLAGE OF	17197C0140E	10-MAY-2000	00-05-101P	.....
05	IL	SOUTH HOLLAND, VILLAGE OF	1701630004C	09-MAY-2000	00-05-1598A	02
05	IL	ST. CLAIR COUNTY *	1706160040A	04-FEB-2000	00-05-0522A	02
05	IL	ST. CLAIR COUNTY *	1706160065A	02-MAR-2000	00-05-0772X	02
05	IL	ST. CLAIR COUNTY *	1706160065A	25-APR-2000	00-05-2206A	02
05	IL	ST. CLAIR COUNTY *	1706160070B	05-JAN-2000	00-05-0354A	17
05	IL	STEPHENSON COUNTY *	1706390125B	21-MAR-2000	00-05-0502A	01
05	IL	STREAMWOOD, VILLAGE OF	1701660001C	04-JAN-2000	99-05-217P	05
05	IL	TINLEY PARK, CITY OF	1701690005E	31-MAR-2000	99-05-303P	05
05	IL	TUSCOLA, CITY OF	1701950005C	08-JUN-2000	00-05-3366A	02
05	IL	UNIVERSITY PARK, VILLAGE OF	17197C0361E	30-MAY-2000	00-05-0732A	01
05	IL	VERNON HILLS, VILLAGE OF	17097C0163F	11-APR-2000	00-05-0220A	01
05	IL	VILLA GROVE, CITY OF	1701960001B	11-FEB-2000	00-05-0224A	02
05	IL	VILLA GROVE, CITY OF	1701960001B	14-JAN-2000	00-05-1278A	02
05	IL	VILLA GROVE, CITY OF	1701960001B	16-FEB-2000	00-05-0506A	02
05	IL	WAUCONDA, VILLAGE OF	17097C0118F	23-MAY-2000	00-05-3512A	02
05	IL	WAUCONDA, VILLAGE OF	17097C0119F	16-MAY-2000	00-05-3086A	02
05	IL	WAUKEGAN, CITY OF	17097C0068F	24-MAY-2000	99-05-4738A	02
05	IL	WESTCHESTER, VILLAGE OF	1701700001B	27-APR-2000	00-05-3078A	02

Region	State	Community	Map panel	Determination date	Case No.	Type
05	IL	WESTCHESTER, VILLAGE OF	1701700001B	29-FEB-2000	00-05-0728A	02
05	IL	WESTMONT, VILLAGE OF	1702200001B	25-APR-2000	00-05-1954A	02
05	IL	WHEATON, CITY OF	1702210005B	04-JAN-2000	99-05-6068A	02
05	IL	WHEELING, VILLAGE OF	1701730005C	11-APR-2000	00-05-2236A	02
05	IL	WHITESIDE COUNTY*	1706870150B	12-JAN-2000	99-05-7202A	02
05	IL	WILL COUNTY *	17197C0030E	13-APR-2000	00-05-1166A	02
05	IL	WILL COUNTY *	17197C0030E	14-MAR-2000	99-05-175P	05
05	IL	WILL COUNTY *	17197C0030E	21-MAR-2000	00-05-2320A	02
05	IL	WILL COUNTY *	17197C0033F	02-MAY-2000	00-05-2560A	02
05	IL	WILL COUNTY *	17197C0090E	08-MAR-2000	99-05-4698A	01
05	IL	WILL COUNTY *	17197C0135F	18-APR-2000	00-05-0104A	02
05	IL	WILL COUNTY *	17197C0140E	23-FEB-2000	00-05-051P	06
05	IL	WILL COUNTY *	17197C0141E	09-MAR-2000	99-05-047P	05
05	IL	WILL COUNTY *	17197C0141E	17-FEB-2000	00-05-141P	06
05	IL	WILL COUNTY *	17197C0154E	16-MAY-2000	00-05-075P	05
05	IL	WILL COUNTY *	17197C0265E	16-MAR-2000	99-05-7010A	02
05	IL	WILL COUNTY *	17197C0370E	08-MAR-2000	99-05-173P	05
05	IL	WILL COUNTY *	17197C0370E	25-APR-2000	99-05-6626A	01
05	IL	WILL COUNTY *	17197C0410E	18-MAY-2000	00-05-0232A	02
05	IL	WILL COUNTY *	17197C0420E	12-JAN-2000	99-05-6362A	02
05	IL	WILL COUNTY *	17197C0580E	31-MAR-2000	99-05-3098A	01
05	IL	WILLIAMSON COUNTY *	1709340001B	24-FEB-2000	99-05-7378A	02
05	IL	WINNEBAGO COUNTY *	1707200035B	28-MAR-2000	00-05-2256A	02
05	IL	WINNEBAGO COUNTY *	1707200070B	04-FEB-2000	99-05-6352A	02
05	IL	WINNEBAGO COUNTY *	1707200070B	04-MAY-2000	00-05-1830A	02
05	IL	WINNETKA, VILLAGE OF	1701760003B	12-MAY-2000	00-05-2420A	02
05	IL	WOOD RIVER, CITY OF	1704510005B	12-APR-2000	99-05-149P	05
05	IN	ADAMS COUNTY *	1804240020C	30-MAY-2000	00-05-2864A	02
05	IN	ADAMS COUNTY *	1804240075C	18-APR-2000	00-05-0286A	02
05	IN	ALLEN COUNTY *	18003C0285E	14-JAN-2000	99-05-7290A	17
05	IN	ALLEN COUNTY *	18003C0325D	22-FEB-2000	00-05-0434A	02
05	IN	ALLEN COUNTY *	18003C0410D	05-JAN-2000	00-05-1100A	02
05	IN	ALLEN COUNTY *	18003C0455D	09-FEB-2000	00-05-0234A	02
05	IN	ANDERSON, CITY OF	1801500003B	06-APR-2000	00-05-2724A	02
05	IN	ANDERSON, CITY OF	1801500006C	23-MAR-2000	00-05-091X	06
05	IN	AURORA, CITY OF	1851720001B	21-APR-2000	00-05-0810A	02
05	IN	BARTHOLOMEW COUNTY *	1800060100B	12-JAN-2000	00-05-1000A	02
05	IN	BENTON COUNTY*	1804770004A	21-MAR-2000	00-05-1824A	02
05	IN	BROWNSBURG, TOWN OF	1800870001C	28-MAR-2000	00-05-2884X	01
05	IN	CARMEL, CITY OF	1800810009C	20-APR-2000	00-05-2418A	02
05	IN	CARMEL, CITY OF	1800810009C	29-FEB-2000	00-05-2376X	02
05	IN	CARMEL, CITY OF	1800810010C	04-APR-2000	00-05-0668A	01
05	IN	CASS COUNTY	1800220200B	25-MAY-2000	00-05-2522A	02
05	IN	CLARK COUNTY *	1804260125C	03-MAY-2000	00-05-3092X	02
05	IN	CLARK COUNTY *	1804260125C	10-MAR-2000	00-05-1788X	02
05	IN	CLARK COUNTY *	1804260175C	02-MAY-2000	00-05-2216A	02
05	IN	CLARK COUNTY *	1804260175C	03-JAN-2000	00-05-0466A	02
05	IN	CLARK COUNTY *	1804260175C	16-MAR-2000	00-05-1624A	02
05	IN	CLARK COUNTY *	1804260175C	21-MAR-2000	00-05-2580A	02
05	IN	CLARK COUNTY *	1804260175C	28-JAN-2000	00-05-1558X	01
05	IN	COLUMBUS, CITY OF	1800070010D	07-JAN-2000	00-05-0236A	01
05	IN	COLUMBUS, CITY OF	1800070010D	09-MAR-2000	00-05-1188A	01
05	IN	COLUMBUS, CITY OF	1800070010D	24-MAY-2000	00-05-2504A	17
05	IN	COLUMBUS, CITY OF	1800070020D	04-FEB-2000	00-05-1722A	02
05	IN	COLUMBUS, CITY OF	1800070020D	21-MAR-2000	00-05-0486A	02
05	IN	DECATUR COUNTY *	1804300105B	23-MAR-2000	00-05-1264A	01
05	IN	DELAWARE COUNTY*	1800510075C	03-JAN-2000	99-05-6508A	17
05	IN	DELAWARE COUNTY*	1800510100C	22-FEB-2000	00-05-1014A	02
05	IN	DELAWARE COUNTY	1800510150B	12-APR-2000	00-05-2620A	02
05	IN	DYER, TOWN OF	1801290001D	30-MAR-2000	00-05-1272A	02
05	IN	ELKHART COUNTY *	1800560015B	19-JAN-2000	00-05-0152A	17
05	IN	ELKHART COUNTY *	1800560020B	21-MAR-2000	00-05-1348A	17
05	IN	ELKHART COUNTY *	1800560075A	06-APR-2000	00-05-1836A	02
05	IN	ELKHART COUNTY *	1800560075A	07-APR-2000	00-05-2356A	02
05	IN	ELKHART COUNTY *	1800560075A	30-MAR-2000	00-05-1834A	02
05	IN	ELKHART, CITY OF	1800570005C	12-APR-2000	00-05-2336A	02
05	IN	ELLETSVILLE, TOWN OF	180170 C	22-MAR-2000	99-05-5326A	02
05	IN	EVANSVILLE, CITY OF	1802560025C	18-APR-2000	99-05-7284A	02
05	IN	EVANSVILLE, CITY OF	1802570001B	04-APR-2000	00-05-1960A	02
05	IN	EVANSVILLE, CITY OF	1802570001B	09-FEB-2000	99-05-5538A	02
05	IN	EVANSVILLE, CITY OF	1802570001B	30-MAY-2000	00-05-2212A	01
05	IN	EVANSVILLE, CITY OF	1802570004B	03-JAN-2000	00-05-0824A	02
05	IN	EVANSVILLE, CITY OF	1802570004B	07-JAN-2000	00-05-0870A	02

Region	State	Community	Map panel	Determination date	Case No.	Type
05	IN	EVANSVILLE, CITY OF	1802570005B	28-JAN-2000	00-05-1162A	02
05	IN	FAIRMOUNT, TOWN OF	180074 B	18-APR-2000	00-05-0852A	02
05	IN	FORT WAYNE, CITY OF	18003C0140D	01-JUN-2000	00-05-2766A	02
05	IN	FORT WAYNE, CITY OF	18003C0270E	03-JAN-2000	00-05-1064A	02
05	IN	FORT WAYNE, CITY OF	18003C0270E	15-FEB-2000	00-05-1126A	02
05	IN	FORT WAYNE, CITY OF	18003C0270E	16-MAY-2000	00-05-0792A	02
05	IN	FORT WAYNE, CITY OF	18003C0270E	17-MAY-2000	00-05-2862A	02
05	IN	FORT WAYNE, CITY OF	18003C0270E	28-MAR-2000	00-05-0338A	02
05	IN	FORT WAYNE, CITY OF	18003C0280E	27-APR-2000	00-05-1776A	17
05	IN	FOUNTAIN COUNTY*	1800640004A	05-JAN-2000	00-05-0496A	02
05	IN	FRANKLIN, CITY OF	1801140002B	18-APR-2000	00-05-1242A	02
05	IN	FRANKLIN, CITY OF	1801140002B	26-MAY-2000	00-05-2060A	17
05	IN	GREENWOOD, CITY OF	1801150004B	28-JAN-2000	00-05-1320A	02
05	IN	HANCOCK COUNTY *	1804190025B	11-APR-2000	00-05-0638A	02
05	IN	HANCOCK COUNTY *	1804190025B	17-MAY-2000	00-05-1766A	02
05	IN	HANCOCK COUNTY *	1804190025B	21-JAN-2000	99-05-7158A	02
05	IN	HANCOCK COUNTY *	1804190075B	23-MAR-2000	00-05-2176A	02
05	IN	HANCOCK COUNTY *	1804190075B	28-JAN-2000	00-05-0592A	02
05	IN	HENDRICKS COUNTY *	1804150050B	12-JAN-2000	99-05-129P	06
05	IN	HENDRICKS COUNTY *	1804150050B	14-MAR-2000	00-05-1042A	01
05	IN	HENDRICKS COUNTY *	1804150050B	23-MAR-2000	00-05-2604A	02
05	IN	HENDRICKS COUNTY *	1804150100B	22-FEB-2000	00-05-1536A	02
05	IN	HIGHLAND, TOWN OF	1851760001C	06-JAN-2000	00-05-0806X	01
05	IN	HOBART, CITY OF	1801360005B	06-APR-2000	99-05-7386A	02
05	IN	HOBART, CITY OF	1801360005B	28-JUN-2000	00-05-2634A	02
05	IN	HUNTINGBURG, CITY OF	1803620005B	02-FEB-2000	00-05-1860X	02
05	IN	INDIANAPOLIS, CITY OF	1801590005D	11-APR-2000	00-05-2234A	01
05	IN	INDIANAPOLIS, CITY OF	1801590005D	27-APR-2000	00-05-2110A	01
05	IN	INDIANAPOLIS, CITY OF	1801590005D	28-JAN-2000	00-05-0526A	02
05	IN	INDIANAPOLIS, CITY OF	1801590015D	21-MAR-2000	00-05-0246A	02
05	IN	INDIANAPOLIS, CITY OF	1801590020D	13-APR-2000	00-05-1998A	02
05	IN	INDIANAPOLIS, CITY OF	1801590025D	02-MAR-2000	99-05-6252A	02
05	IN	INDIANAPOLIS, CITY OF	1801590030D	19-MAY-2000	00-05-2280A	02
05	IN	INDIANAPOLIS, CITY OF	1801590030D	30-MAR-2000	00-05-065P	05
05	IN	INDIANAPOLIS, CITY OF	1801590035D	05-JAN-2000	00-05-0256A	01
05	IN	INDIANAPOLIS, CITY OF	1801590035D	10-FEB-2000	00-05-0452A	01
05	IN	INDIANAPOLIS, CITY OF	1801590035D	11-APR-2000	00-05-2274A	02
05	IN	INDIANAPOLIS, CITY OF	1801590035D	24-MAY-2000	00-05-2254A	01
05	IN	INDIANAPOLIS, CITY OF	1801590040D	12-MAY-2000	00-05-0820A	01
05	IN	INDIANAPOLIS, CITY OF	1801590040D	30-MAR-2000	00-05-0832A	01
05	IN	INDIANAPOLIS, CITY OF	1801590045D	04-APR-2000	00-05-1612A	02
05	IN	INDIANAPOLIS, CITY OF	1801590045D	29-FEB-2000	00-05-2374X	02
05	IN	INDIANAPOLIS, CITY OF	1801590055D	04-APR-2000	00-05-0374A	02
05	IN	INDIANAPOLIS, CITY OF	1801590060D	16-FEB-2000	99-05-6982A	01
05	IN	INDIANAPOLIS, CITY OF	1801590060D	28-JAN-2000	00-05-1560A	01
05	IN	INDIANAPOLIS, CITY OF	1801590070D	10-FEB-2000	00-05-0538A	01
05	IN	INDIANAPOLIS, CITY OF	1801590075D	09-FEB-2000	00-05-1208A	02
05	IN	INDIANAPOLIS, CITY OF	1801590090D	02-FEB-2000	00-05-1778X	01
05	IN	INDIANAPOLIS, CITY OF	1801590090D	09-MAR-2000	00-05-1582A	01
05	IN	INDIANAPOLIS, CITY OF	1801590090D	14-MAR-2000	00-05-1352A	02
05	IN	INDIANAPOLIS, CITY OF	1801590090D	23-FEB-2000	99-05-7128A	01
05	IN	INDIANAPOLIS, CITY OF	1801590095D	28-JAN-2000	99-05-4150A	01
05	IN	INDIANAPOLIS, CITY OF	1801590095D	28-MAR-2000	00-05-1910A	02
05	IN	INDIANAPOLIS, CITY OF	1801590100D	27-APR-2000	00-05-2928A	02
05	IN	JACKSON COUNTY *	1804050070B	03-JAN-2000	00-05-0970A	02
05	IN	JOHNSON COUNTY *	1801110014C	20-MAR-2000	99-05-954P	05
05	IN	JOHNSON COUNTY *	1801110014C	22-FEB-2000	00-05-2136A	02
05	IN	KOSCIUSKO COUNTY*	18085C0035C	13-APR-2000	00-05-2880A	02
05	IN	KOSCIUSKO COUNTY*	18085C0045C	28-APR-2000	00-05-2352A	02
05	IN	KOSCIUSKO COUNTY*	18085C0080C	07-MAR-2000	00-05-1532A	02
05	IN	KOSCIUSKO COUNTY*	18085C0080C	21-MAR-2000	00-05-1732A	02
05	IN	KOSCIUSKO COUNTY*	18085C0100C	03-MAY-2000	00-05-2170A	02
05	IN	LAKE COUNTY	1801260115B	28-JUN-2000	00-05-2846A	02
05	IN	LAGRANGE COUNTY*	1801250004B	02-FEB-2000	99-05-7342A	02
05	IN	LAGRANGE COUNTY*	1801250004B	21-APR-2000	00-05-2516A	02
05	IN	LANESVILLE, TOWN OF	180420 C	05-JAN-2000	00-05-0580A	02
05	IN	LAWRENCE, CITY OF	1801590020D	21-JAN-2000	00-05-0856A	02
05	IN	LEBANON, CITY OF	1800130001D	21-MAR-2000	00-05-1942A	01
05	IN	LEBANON, CITY OF	1800130002D	21-MAR-2000	00-05-2024A	02
05	IN	LIBERTY, TOWNSHIP OF	1804880002A	22-FEB-2000	99-05-7056A	02
05	IN	LONG BEACH, TOWN OF	185177 A	09-FEB-2000	00-05-1946X	02
05	IN	MADISON COUNTY *	1804420005B	20-APR-2000	00-05-2224A	02
05	IN	MUNCIE, CITY OF	1800530002C	14-JAN-2000	99-05-6846A	02

Region	State	Community	Map panel	Determination date	Case No.	Type
05	IN	NEW ALBANY, CITY OF	1800620005C	02-MAR-2000	00-05-0358A	02
05	IN	NEW ALBANY, CITY OF	1800620005C	26-MAY-2000	00-05-3090A	02
05	IN	NEWBURGH, TOWN OF	1802760001B	07-JAN-2000	00-05-0912A	02
05	IN	NOBLE COUNTY *	1801830075B	28-JAN-2000	00-05-0932A	02
05	IN	NOBLESVILLE, CITY OF	1800820015E	20-APR-2000	00-05-0952A	01
05	IN	NOBLESVILLE, CITY OF	1800820015E	31-MAR-2000	00-05-2478A	02
05	IN	NOBLESVILLE, CITY OF	1800820025E	12-JAN-2000	99-05-5706A	01
05	IN	NOBLESVILLE, CITY OF	1800820030E	11-APR-2000	00-05-0110A	01
05	IN	NOBLESVILLE, CITY OF	1800820030E	27-APR-2000	00-05-2110A	01
05	IN	NOBLESVILLE, CITY OF	1800820030E	30-MAR-2000	00-05-1290A	02
05	IN	OHIO COUNTY*	180406 B	03-JAN-2000	00-05-0248A	02
05	IN	OWEN COUNTY*	1804810006B	22-FEB-2000	00-05-0658A	02
05	IN	PORTER COUNTY *	1804250060B	04-APR-2000	00-05-2066A	02
05	IN	PORTER COUNTY *	1804250125B	23-MAR-2000	99-05-7140A	02
05	IN	PRINCETON, CITY OF	1800730010D	08-MAR-2000	99-05-5684A	02
05	IN	PUTNAM COUNTY*	1802130003B	16-MAR-2000	00-05-0726A	02
05	IN	SCOTTSBURG, CITY OF	1802340001C	04-MAY-2000	00-05-2974A	02
05	IN	SEYMOUR, CITY OF	1800990004C	05-JAN-2000	00-05-0642A	02
05	IN	SEYMOUR, CITY OF	1800990004C	10-FEB-2000	00-05-1626A	02
05	IN	SEYMOUR, CITY OF	1800990004C	24-MAY-2000	00-05-1534A	17
05	IN	SEYMOUR, CITY OF	1800990004C	21-APR-2000	00-05-2260A	02
05	IN	SEYMOUR, CITY OF	1800990004C	08-JUN-2000	00-05-2990A	02
05	IN	SHELBY COUNTY *	1802350060B	09-MAY-2000	00-05-1572A	02
05	IN	SPENCER COUNTY	1802370150A	09-MAY-2000	00-05-2988A	02
05	IN	STEUBEN COUNTY*	1802430025B	05-APR-2000	00-05-1996A	02
05	IN	STEUBEN COUNTY*	1802430025B	12-JAN-2000	00-05-0536A	02
05	IN	STEUBEN COUNTY*	1802430025B	12-JAN-2000	00-05-0956A	02
05	IN	STEUBEN COUNTY*	1802430025B	18-MAY-2000	00-05-3688A	02
05	IN	STEUBEN COUNTY*	1802430025B	23-MAR-2000	00-05-2038A	02
05	IN	STEUBEN COUNTY*	1802430050B	22-FEB-2000	00-05-0140A	02
05	IN	STEUBEN COUNTY*	1802430075B	07-APR-2000	00-05-2670A	02
05	IN	STEUBEN COUNTY*	1802430100B	23-MAR-2000	00-05-1676A	02
05	IN	STEUBEN COUNTY*	1802430100B	26-MAY-2000	00-05-3154A	02
05	IN	SWITZERLAND COUNTY *	1802510100B	18-APR-2000	00-05-2798A	02
05	IN	TELL CITY, CITY OF	180197 B	09-FEB-2000	00-05-1254A	02
05	IN	TIPPECANOE COUNTY *	1804280030B	16-MAY-2000	00-05-2706A	02
05	IN	TIPPECANOE COUNTY *	1804280030B	30-MAY-2000	00-05-2788A	02
05	IN	TIPPECANOE COUNTY *	1804280050B	12-JAN-2000	00-05-1282X	02
05	IN	TIPPECANOE COUNTY *	1804280060B	12-JAN-2000	00-05-0938A	02
05	IN	TIPPECANOE COUNTY *	1804280080B	28-JAN-2000	99-05-6364A	02
05	IN	VANDERBURGH COUNTY *	1802560025C	05-JAN-2000	00-05-0362A	02
05	IN	VANDERBURGH COUNTY *	1802560025C	07-MAR-2000	00-05-0740A	01
05	IN	VANDERBURGH COUNTY *	1802560025C	09-FEB-2000	00-05-1368A	01
05	IN	VANDERBURGH COUNTY *	1802560025C	12-JAN-2000	00-05-0962A	01
05	IN	VANDERBURGH COUNTY *	1802560025C	18-APR-2000	00-05-2902A	02
05	IN	VANDERBURGH COUNTY *	1802560025C	21-MAR-2000	00-05-1870A	01
05	IN	VANDERBURGH COUNTY *	1802560025C	25-APR-2000	00-05-1396A	01
05	IN	VANDERBURGH COUNTY *	1802560025C	25-APR-2000	00-05-1958A	01
05	IN	VANDERBURGH COUNTY *	1802560025C	25-APR-2000	00-05-2390A	02
05	IN	VANDERBURGH COUNTY *	1802560025C	27-APR-2000	00-05-2474A	02
05	IN	VANDERBURGH COUNTY *	1802560025C	28-JAN-2000	00-05-1092A	02
05	IN	VANDERBURGH COUNTY *	1802560055C	21-APR-2000	00-05-2700A	02
05	IN	VANDERBURGH COUNTY *	1802560075C	21-MAR-2000	00-05-1492A	02
05	IN	VANDERBURGH COUNTY *	1802560100B	05-JAN-2000	00-05-1288X	01
05	IN	VANDERBURGH COUNTY *	1802560100B	14-MAR-2000	00-05-1570A	02
05	IN	VANDERBURGH COUNTY *	1802560100B	18-APR-2000	00-05-2152A	02
05	IN	VANDERBURGH COUNTY *	1802560100B	25-APR-2000	00-05-2476A	02
05	IN	VANDERBURGH COUNTY *	1802560100B	25-APR-2000	00-05-2480A	02
05	IN	VANDERBURGH COUNTY *	1802560100B	27-APR-2000	00-05-2882A	02
05	IN	VERMILLION COUNTY *	1804490001B	17-FEB-2000	00-05-1066A	02
05	IN	VIGO COUNTY *	1802630010B	23-FEB-2000	99-05-5874A	02
05	IN	WARRICK COUNTY *	1804180100C	05-JAN-2000	00-05-0654A	02
05	IN	WARRICK COUNTY *	1804180175B	04-MAY-2000	00-05-3452X	01
05	IN	WARRICK COUNTY *	1804180175B	14-MAR-2000	99-05-7136A	01
05	IN	WARRICK COUNTY *	1804180175B	19-JAN-2000	00-05-0380A	02
05	IN	WARRICK COUNTY *	1804180175B	25-APR-2000	00-05-2396A	01
05	IN	WELLS COUNTY *	1802880100C	13-APR-2000	00-05-1678A	02
05	IN	WEST LAFAYETTE, CITY OF	1802540002C	09-MAR-2000	99-05-6922A	01
05	IN	WESTFIELD, TOWN OF	1800830011C	09-MAY-2000	00-05-0528A	01
05	IN	WHITE COUNTY *	1804470002C	25-APR-2000	00-05-1494A	02
05	IN	WHITE COUNTY	1804470005C	25-APR-2000	00-05-2622A	02
05	IN	WHITE COUNTY	1804470005C	14-JUN-2000	00-05-3290A	02
05	IN	WHITLEY COUNTY*	1802980002B	14-MAR-2000	00-05-0192A	02

Region	State	Community	Map panel	Determination date	Case No.	Type
05	IN	WHITLEY COUNTY*	1802980006B	02-FEB-2000	99-05-7166A	02
05	MI	ALBEE, TOWNSHIP OF	26145C0245D	30-MAR-2000	00-05-1054A	02
05	MI	ALLEGAN, CITY OF	2600030001B	29-FEB-2000	99-05-7312A	02
05	MI	ANN ARBOR, CITY OF	2602130008D	05-MAY-2000	00-05-2284A	02
05	MI	ANN ARBOR, CITY OF	2602130008D	24-FEB-2000	00-05-1346A	02
05	MI	ANN ARBOR, CITY OF	2602130005D	25-MAY-2000	00-05-3004A	02
05	MI	AU SABLE, TOWNSHIP OF	2600980004C	04-FEB-2000	00-05-1086A	02
05	MI	AU TRAIN, TOWNSHIP OF	2603420025C	04-MAY-2000	00-05-2746A	02
05	MI	AUGRES, TOWNSHIP OF	2600130025B	18-APR-2000	00-05-2036A	02
05	MI	BALDWIN, TOWNSHIP OF	2600990016D	09-MAY-2000	00-05-1508A	02
05	MI	BAY MILLS, TOWNSHIP OF	2603740050B	11-APR-2000	00-05-1978A	02
05	MI	BAY MILLS, TOWNSHIP OF	2603740050B	21-APR-2000	00-05-1658A	02
05	MI	BEDFORD, TOWNSHIP OF	2601420003B	01-JUN-2000	00-05-3128A	02
05	MI	BEDFORD, TOWNSHIP OF	2601420006B	28-JAN-2000	00-05-0960A	02
05	MI	BEDFORD, TOWNSHIP OF	2601420008B	12-JAN-2000	00-05-0950A	02
05	MI	BEDFORD, TOWNSHIP OF	2601420012B	12-JAN-2000	00-05-0742A	02
05	MI	BENONA, TOWNSHIP OF	260481 A	30-MAY-2000	00-05-1370A	02
05	MI	BERLIN, TOWNSHIP OF	2601430005A	20-APR-2000	00-05-3526V	19
05	MI	BEVERLY HILLS, VILLAGE OF	2602560001B	21-MAR-2000	00-05-2786A	02
05	MI	BROWNSTOWN, CHARTER TOWNSHIP OF	2602180010B	02-MAR-2000	00-05-0712A	02
05	MI	BROWNSTOWN, CHARTER TOWNSHIP OF	2602180010B	11-APR-2000	00-05-3246X	02
05	MI	BROWNSTOWN, CHARTER TOWNSHIP OF	2602180015B	06-JAN-2000	99-05-6258A	02
05	MI	BROWNSTOWN, CHARTER TOWNSHIP OF	2602180015B	23-FEB-2000	99-05-6418A	01
05	MI	BRUCE, TOWNSHIP OF	2603750025A	05-JAN-2000	99-05-6646A	02
05	MI	BURTON, CITY OF	2602870001B	14-JUN-2000	00-05-3284A	02
05	MI	CADILLAC, CITY OF	26165C0456C	02-MAR-2000	00-05-1454A	02
05	MI	CADILLAC, CITY OF	26165C0456C	19-JAN-2000	00-05-1220A	02
05	MI	CALEDONIA, TOWNSHIP OF	2606930005B	28-JAN-2000	00-05-0436A	02
05	MI	CANNON, TOWNSHIP OF	2607340025A	15-FEB-2000	99-05-6606A	01
05	MI	CANTON, TOWNSHIP OF	2602190002B	31-MAR-2000	99-05-013P	05
05	MI	CANTON, TOWNSHIP OF	2602190006B	09-MAY-2000	00-05-0346A	01
05	MI	CHERRY GROVE, TOWNSHIP OF	26165C0432C	10-FEB-2000	00-05-0626A	02
05	MI	CHESTERFIELD, TOWNSHIP OF	2601200005B	04-FEB-2000	00-05-0652A	02
05	MI	CHESTERFIELD, TOWNSHIP OF	2601200010B	04-APR-2000	00-05-1382A	02
05	MI	CHESTERFIELD, TOWNSHIP OF	2601200010B	13-APR-2000	00-05-2860A	02
05	MI	CHOCOLAY, TOWNSHIP OF	2604480010B	30-JUN-2000	00-05-2628A	02
05	MI	CLARK, TOWNSHIP OF	2607590050B	12-JAN-2000	00-05-1104A	02
05	MI	CLARK, TOWNSHIP OF	2607590050B	14-JAN-2000	00-05-1118A	02
05	MI	CLAY, TOWNSHIP OF	2601940001B	17-FEB-2000	00-05-1232A	02
05	MI	CLEVELAND, TOWNSHIP OF	260302 A	18-APR-2000	00-05-1426A	02
05	MI	CLINTON, CHARTER TOWNSHIP OF	2601210005E	12-JAN-2000	00-05-0980A	02
05	MI	CLINTON, CHARTER TOWNSHIP OF	2601210005E	30-MAR-2000	00-05-063P	05
05	MI	COLDWATER, TOWNSHIP OF	2608260010A	19-APR-2000	00-05-2736A	02
05	MI	COLDWATER, TOWNSHIP OF		16-MAY-2000	00-05-2550A	02
05	MI	COLON, VILLAGE OF	2605110005B	14-MAR-2000	00-05-1586A	02
05	MI	COMMERCE, TOWNSHIP OF	2604730005B	24-FEB-2000	00-05-1748A	02
05	MI	CORUNNA, CITY OF	2606020001A	29-FEB-2000	00-05-1852X	02
05	MI	DE WITT, CITY OF	2600600005B	09-MAR-2000	00-05-0196A	01
05	MI	DEARBORN HEIGHTS, CITY OF	2602210007C	02-MAY-2000	99-05-6662A	02
05	MI	DEARBORN HEIGHTS, CITY OF	2602210007C	06-APR-2000	00-05-1646A	02
05	MI	DEARBORN HEIGHTS, CITY OF	2602210007C	11-APR-2000	00-05-3220A	02
05	MI	DEARBORN, CITY OF	2602200005D	15-FEB-2000	99-05-3250A	02
05	MI	DEERFIELD, TOWNSHIP OF	26073C0305C	27-APR-2000	00-05-3194A	02
05	MI	DELHI, CHARTER TOWNSHIP OF	2600880005C	21-JAN-2000	00-05-1284A	02
05	MI	DEXTER, TOWNSHIP OF	2605360002B	18-APR-2000	00-05-1616A	02
05	MI	DUNDEE, TOWNSHIP OF	2601440010B	20-APR-2000	00-05-3258V	19
05	MI	ELBA, TOWNSHIP OF	2607760001A	01-FEB-2000	00-05-1070A	02
05	MI	ELBA, TOWNSHIP OF	2607760001A	14-MAR-2000	99-05-7174A	02
05	MI	EMMETT, TOWNSHIP OF	2605610006A	07-MAR-2000	00-05-0408A	02
05	MI	ERIE, TOWNSHIP OF	26115C0502D	20-APR-2000	00-05-3256V	19
05	MI	ESCANABA, TOWNSHIP OF	26041C0605C	30-MAY-2000	00-05-2002A	02
05	MI	FABIUS, TOWNSHIP OF	2607810025A	04-APR-2000	00-05-2608A	02
05	MI	FABIUS, TOWNSHIP OF	2607810025A	18-APR-2000	00-05-2032A	02
05	MI	FABIUS, TOWNSHIP OF	2607810025A	25-APR-2000	00-05-2386A	02
05	MI	FARMINGTON HILLS, CITY OF	2601720002C	04-MAY-2000	00-05-2740A	02
05	MI	FARMINGTON HILLS, CITY OF	2601720003C	18-APR-2000	00-05-2088A	02
05	MI	FARMINGTON HILLS, CITY OF	2601720007C	13-APR-2000	00-05-2056A	01
05	MI	FLAT ROCK, CITY OF	2602240003B	05-JAN-2000	00-05-0560A	02
05	MI	FLAT ROCK, CITY OF	2602240003B	09-MAY-2000	00-05-0508A	01
05	MI	FRASER, CITY OF	2601220001B	06-APR-2000	00-05-1892A	02
05	MI	FRENCHTOWN, TOWNSHIP OF	2601460001A	20-APR-2000	00-05-3522V	19
05	MI	GARDEN, TOWNSHIP OF	26041C0520C	15-MAR-2000	99-05-7316A	02
05	MI	GEORGETOWN, CHARTER TOWNSHIP OF	2605890005B	21-JAN-2000	99-05-5310A	01

Region	State	Community	Map panel	Determination date	Case No.	Type
05	MI	GRAND HAVEN, TOWNSHIP OF	2602700005B	05-JAN-2000	00-05-0804A	02
05	MI	GRAND HAVEN, TOWNSHIP OF	2602700005B	23-JUN-2000	00-05-4110A	02
05	MI	GRAND RAPIDS, CITY OF	2601060025C	10-FEB-2000	00-05-1440A	02
05	MI	GRANDVILLE, CITY OF	2602710004B	16-MAY-2000	00-05-1600A	02
05	MI	GREEN OAK, TOWNSHIP OF	2604400005B	13-APR-2000	00-05-3104A	02
05	MI	GREEN OAK, TOWNSHIP OF	2604400020B	21-MAR-2000	00-05-1804A	02
05	MI	GREENBUSH, TOWNSHIP OF	2600010007C	01-JUN-2000	00-05-2452A	02
05	MI	GREENBUSH, TOWNSHIP OF	2600010007C	12-JAN-2000	00-05-1230A	02
05	MI	GREENBUSH, TOWNSHIP OF	2600010007C	17-MAY-2000	00-05-2140A	02
05	MI	GREENBUSH, TOWNSHIP OF	2600010007C	18-APR-2000	00-05-1654A	02
05	MI	GREENBUSH, TOWNSHIP OF	2600010007C	18-APR-2000	00-05-2138A	02
05	MI	GREENBUSH, TOWNSHIP OF	2600010007C	22-FEB-2000	00-05-0624A	02
05	MI	GROSSE ILE, TOWNSHIP OF	2602270005B	04-APR-2000	00-05-1286A	02
05	MI	HAMBURG, TOWNSHIP OF	2601180010C	14-JAN-2000	00-05-0796A	02
05	MI	HAMPTON, TOWNSHIP OF	26017C0150D	24-FEB-2000	99-05-7126A	01
05	MI	HAMPTON, TOWNSHIP OF	26017C0190D	12-JAN-2000	00-05-0492A	02
05	MI	HAMPTON, TOWNSHIP OF	26017C0190D	15-MAR-2000	00-05-0736A	01
05	MI	HARRISON, TOWNSHIP OF	2601230005C	19-JAN-2000	00-05-1146A	02
05	MI	HARRISON, TOWNSHIP OF	2601230005C	24-FEB-2000	00-05-1422A	02
05	MI	HARRISON, TOWNSHIP OF	2601230005C	28-JAN-2000	00-05-0718A	02
05	MI	HARRISON, TOWNSHIP OF	2601230010C	04-MAY-2000	00-05-2346A	02
05	MI	HARRISON, TOWNSHIP OF	2601230010C	18-APR-2000	00-05-0640A	02
05	MI	HARRISON, TOWNSHIP OF	2601230010C	21-MAR-2000	00-05-1252A	02
05	MI	HARRISON, TOWNSHIP OF	2601230010C	25-APR-2000	00-05-3226A	02
05	MI	HARRISON, TOWNSHIP OF	2601230010C	25-APR-2000	00-05-3228A	02
05	MI	HOWELL, CITY OF	260441 A	19-MAY-2000	00-05-2294A	02
05	MI	HUDSONVILLE, CITY OF	2604930002A	15-MAR-2000	99-05-6374A	01
05	MI	HURON, TOWNSHIP OF	2605450006B	23-MAR-2000	00-05-1798A	02
05	MI	IDA, TOWNSHIP OF	2601470005B	20-APR-2000	00-05-3528V	19
05	MI	IDA, TOWNSHIP OF	2601470015B	21-APR-2000	00-05-2578A	02
05	MI	IDA, TOWNSHIP OF	2601470020B	21-APR-2000	99-05-7150A	01
05	MI	INDEPENDENCE, TOWNSHIP OF	2604750006B	01-FEB-2000	00-05-1106A	02
05	MI	IRONWOOD, TOWNSHIP OF	2604030002B	07-JAN-2000	00-05-0876A	02
05	MI	ISABELLA, TOWNSHIP OF	26073C0200C	18-APR-2000	00-05-1768A	02
05	MI	KOCHVILLE, TOWNSHIP OF	26145C0035D	12-JAN-2000	00-05-0666A	02
05	MI	L'ANSE, VILLAGE OF	260552 A	16-MAY-2000	00-05-0746A	02
05	MI	LAKE ORION, VILLAGE OF	2605880001A	19-MAY-2000	00-05-2944A	02
05	MI	LAKE, TOWNSHIP OF	260030 A	06-JAN-2000	99-05-6674A	02
05	MI	LAKE, TOWNSHIP OF	260030 A	29-FEB-2000	00-05-1756A	02
05	MI	LASALLE, TOWNSHIP OF	2601480001C	20-APR-2000	00-05-3252V	19
05	MI	LIVONIA, CITY OF	2602330001B	09-MAR-2000	00-05-1840A	02
05	MI	LOCKPORT, TOWNSHIP OF	2607150005B	21-MAR-2000	00-05-1588A	02
05	MI	MACOMB, TOWNSHIP OF	2604450020B	21-APR-2000	00-05-2792A	02
05	MI	MACOMB, TOWNSHIP OF	2604450020B	28-MAR-2000	00-05-0830A	01
05	MI	MARENGO, TOWNSHIP OF	2605630005A	02-FEB-2000	00-05-0098A	02
05	MI	MARENGO, TOWNSHIP OF	2605630010A	24-MAY-2000	00-05-2682A	02
05	MI	MASONVILLE, TOWNSHIP OF	26041C0439C	22-FEB-2000	00-05-1318A	02
05	MI	MASONVILLE, TOWNSHIP OF	26041C0439C	29-FEB-2000	00-05-1760A	02
05	MI	MENOMINEE, CITY OF	2601380005B	06-APR-2000	00-05-1530A	02
05	MI	MENOMINEE, CITY OF	2601380005B	21-JAN-2000	00-05-1204A	02
05	MI	MERIDIAN, CHARTER TOWNSHIP OF	2600930001A	03-JAN-2000	00-05-0698A	02
05	MI	MERIDIAN, CHARTER TOWNSHIP OF	2600930001A	12-JAN-2000	00-05-0324A	02
05	MI	MERIDIAN, CHARTER TOWNSHIP OF	2600930001A	12-JAN-2000	00-05-0326A	02
05	MI	MERIDIAN, CHARTER TOWNSHIP OF	2600930001A	16-FEB-2000	00-05-0312A	02
05	MI	MERIDIAN, CHARTER TOWNSHIP OF	2600930001A	18-APR-2000	00-05-1496A	02
05	MI	MIDLAND, CITY OF	2601400005D	07-MAR-2000	00-05-1436A	02
05	MI	MIDLAND, CITY OF	2601400008D	04-APR-2000	00-05-1356A	17
05	MI	MIDLAND, CITY OF	2601400008D	14-JAN-2000	00-05-1182A	02
05	MI	MONROE, TOWNSHIP OF	2601540001A	20-APR-2000	00-05-3254V	19
05	MI	MOUNT PLEASANT, CITY OF	26073C0306C	20-APR-2000	00-05-2308A	02
05	MI	NEW HAVEN, VILLAGE OF	2604460001A	10-MAR-2000	99-05-5442A	02
05	MI	NILES, TOWNSHIP OF	260041 B	23-MAR-2000	00-05-1952A	02
05	MI	NORTHFIELD, TOWNSHIP OF	2606350005A	24-FEB-2000	00-05-1256A	02
05	MI	NORTON SHORES, CITY OF	2601650001A	02-FEB-2000	00-05-1406A	02
05	MI	NORTON SHORES, CITY OF	2601650001A	30-MAR-2000	00-05-2360X	02
05	MI	NORTON SHORES, CITY OF	2601650001A	25-MAY-2000	00-05-3056A	02
05	MI	NOVI, CITY OF	2601750007C	09-FEB-2000	99-05-6296A	01
05	MI	NOVI, CITY OF	2601750007C	12-JAN-2000	00-05-0072A	01
05	MI	NOVI, CITY OF	2601750009C	18-APR-2000	00-05-1518A	01
05	MI	NOVI, CITY OF	2601750009C	22-FEB-2000	00-05-0258A	02
05	MI	ONTONAGON, TOWNSHIP OF	2604070004B	22-FEB-2000	00-05-1716A	02
05	MI	ONTONAGON, TOWNSHIP OF	2604070004B	28-JUN-2000	00-05-3382A	02
05	MI	OSCODA, TOWNSHIP OF	2601010025C	31-MAY-2000	00-05-2114A	02

Region	State	Community	Map panel	Determination date	Case No.	Type
05	MI	OWOSSO, CITY OF	2605960002A	28-MAR-2000	00-05-1172A	02
05	MI	PLAINFIELD, TOWNSHIP OF	2601090005B	12-JAN-2000	99-05-7018A	02
05	MI	PLAINFIELD, TOWNSHIP OF	2601090010B	01-JUN-2000	00-05-1822A	17
05	MI	PITTSFIELD, CHARTER TOWNSHIP OF	2606230010C	28-JUN-2000	00-05-3784A	02
05	MI	PORT HURON, TOWNSHIP OF	2606720005A	08-JUN-2000	00-05-3380A	02
05	MI	RABER, TOWNSHIP OF	2607860025A	02-MAR-2000	00-05-0546A	02
05	MI	RAISINVILLE, TOWNSHIP OF	2601550010B	20-APR-2000	00-05-3524V	19
05	MI	REDFORD, TOWNSHIP OF	2602380005B	12-JAN-2000	00-05-0934A	02
05	MI	REDFORD, TOWNSHIP OF	2602380005B	25-MAY-2000	00-05-3040A	02
05	MI	ROCKWOOD, CITY OF	2602410005B	25-APR-2000	00-05-1136A	01
05	MI	SAGINAW, TOWNSHIP OF	26145C0130D	14-JAN-2000	00-05-1044A	02
05	MI	SAGINAW, TOWNSHIP OF	26145C0130D	27-APR-2000	00-05-2436A	17
05	MI	SAGINAW, TOWNSHIP OF	26145C0130D	28-JAN-2000	00-05-1062A	02
05	MI	SALINE, CITY OF	2602150001B	25-APR-2000	00-05-1902A	17
05	MI	SELMA, TOWNSHIP OF	26165C0338C	12-JAN-2000	00-05-0690A	02
05	MI	SHELBY, TOWNSHIP OF	2601260010B	30-MAY-2000	00-05-1712A	02
05	MI	SIMS, TOWNSHIP OF	2600150005C	03-FEB-2000	00-05-1096A	02
05	MI	SOUTH HAVEN, CITY OF	2602110002B	19-JAN-2000	99-05-6850A	01
05	MI	SPAULDING, TOWNSHIP OF	26145C0190D	30-JUN-2000	00-05-4092A	02
05	MI	ST. CLAIR SHORES, CITY OF	2601270005B	02-FEB-2000	00-05-0190A	02
05	MI	ST. CLAIR SHORES, CITY OF	2601270005B	02-MAY-2000	00-05-1918A	02
05	MI	ST. CLAIR SHORES, CITY OF	2601270005B	02-MAY-2000	00-05-2744A	02
05	MI	ST. CLAIR SHORES, CITY OF	2601270005B	04-MAY-2000	00-05-2464A	02
05	MI	ST. CLAIR SHORES, CITY OF	2601270005B	05-APR-2000	00-05-2148A	02
05	MI	ST. CLAIR SHORES, CITY OF	2601270005B	09-MAR-2000	00-05-2664X	02
05	MI	ST. CLAIR SHORES, CITY OF	2601270005B	12-JAN-2000	00-05-0300A	02
05	MI	ST. CLAIR SHORES, CITY OF	2601270005B	14-MAR-2000	00-05-1528A	02
05	MI	ST. CLAIR SHORES, CITY OF	2601270005B	15-FEB-2000	00-05-1206A	02
05	MI	ST. CLAIR SHORES, CITY OF	2601270005B	18-APR-2000	00-05-2262A	02
05	MI	ST. CLAIR SHORES, CITY OF	2601270005B	18-FEB-2000	00-05-0500A	02
05	MI	ST. CLAIR SHORES, CITY OF	2601270005B	21-MAR-2000	00-05-1398A	02
05	MI	ST. CLAIR SHORES, CITY OF	2601270005B	24-FEB-2000	00-05-0848A	02
05	MI	ST. CLAIR SHORES, CITY OF	2601270005B	24-FEB-2000	00-05-2446A	02
05	MI	ST. CLAIR SHORES, CITY OF	2601270005B	24-MAY-2000	00-05-2790A	02
05	MI	ST. CLAIR SHORES, CITY OF	2601270005B	25-APR-2000	00-05-3150A	02
05	MI	ST. CLAIR SHORES, CITY OF	2601270005B	25-APR-2000	00-05-3170A	02
05	MI	ST. CLAIR SHORES, CITY OF	2601270005B	25-MAY-2000	00-05-3182A	02
05	MI	ST. CLAIR SHORES, CITY OF	2601270005B	27-APR-2000	00-05-3074A	02
05	MI	ST. CLAIR SHORES, CITY OF	2601270005B	28-JAN-2000	00-05-1068A	02
05	MI	STERLING HEIGHTS, CITY OF	2601280015F	05-JAN-2000	99-05-6792A	02
05	MI	STERLING HEIGHTS, CITY OF	2601280015F	08-MAR-2000	00-05-2030A	01
05	MI	STERLING HEIGHTS, CITY OF	2601280015F	21-MAR-2000	00-05-1596A	02
05	MI	SWAN CREEK, TOWNSHIP OF	26145C0125D	06-APR-2000	00-05-1294A	02
05	MI	SWAN CREEK, TOWNSHIP OF	26145C0125D	21-MAR-2000	00-05-1622A	02
05	MI	TAYLOR, CITY OF	2607280002A	07-JAN-2000	00-05-1098A	02
05	MI	TAYLOR, CITY OF	2607280004A	02-FEB-2000	00-05-1180A	02
05	MI	THOMAS, TOWNSHIP OF	26145C0130D	28-JAN-2000	00-05-1056A	02
05	MI	THOMAS, TOWNSHIP OF	26145C0130D	26-MAY-2000	00-05-2962A	02
05	MI	THORNAPPLE, TOWNSHIP OF	2606300001B	12-JAN-2000	99-05-6786A	02
05	MI	TRENTON, CITY OF	2602440004C	04-MAY-2000	00-05-2322A	02
05	MI	TRENTON, CITY OF	2602440002B	25-MAY-2000	00-05-3030A	02
05	MI	TROY, CITY OF	2601800002D	24-MAY-2000	00-05-2666A	02
05	MI	TROY, CITY OF	2601800002D	29-FEB-2000	00-05-1258A	02
05	MI	WARREN, CITY OF	2601290010C	12-MAR-2000	00-05-0920A	02
05	MI	WASHINGTON, TOWNSHIP OF	2604470015A	17-APR-2000	99-05-307P	05
05	MI	WATERFORD, CHARTER TOWNSHIP OF	2602840005B	18-APR-2000	00-05-2194A	02
05	MI	WATERFORD, CHARTER TOWNSHIP OF	2602840010B	14-JAN-2000	00-05-0590A	02
05	MI	WATERFORD, CHARTER TOWNSHIP OF	2602840010B	18-APR-2000	00-05-1900A	02
05	MI	WATERFORD, CHARTER TOWNSHIP OF	2602840010B	18-APR-2000	99-05-5648A	02
05	MI	WATERFORD, CHARTER TOWNSHIP OF	2602840010B	18-FEB-2000	00-05-1268A	02
05	MI	WATERFORD, CHARTER TOWNSHIP OF	2602840010B	25-APR-2000	00-05-3216A	02
05	MI	WATERFORD, CHARTER TOWNSHIP OF	2602840010B	28-JAN-2000	99-05-6776A	02
05	MI	WATERFORD, CHARTER TOWNSHIP OF	2602840020B	11-APR-2000	00-05-2800A	02
05	MI	WATERFORD, CHARTER TOWNSHIP OF	2602840020B	18-APR-2000	00-05-1652A	02
05	MI	WATERFORD, CHARTER TOWNSHIP OF	2602840020B	23-MAR-2000	00-05-0550A	02
05	MI	WHITE LAKE, TOWNSHIP OF	2604790005B	05-APR-2000	00-05-1934A	02
05	MI	WHITE LAKE, TOWNSHIP OF	2604790005B	29-FEB-2000	00-05-1442A	02
05	MI	WHITE LAKE, TOWNSHIP OF	2604790010B	25-APR-2000	00-05-1526A	02
05	MI	WHITE LAKE, TOWNSHIP OF	2604790005B	26-MAY-2000	00-05-2830A	02
05	MI	WHITEWATER, TOWNSHIP OF	2607940025A	21-MAR-2000	00-05-1414A	02
05	MI	WHITEWATER, TOWNSHIP OF	2607940025A	28-APR-2000	00-05-1650A	02
05	MI	WILLIAMSTON, CITY OF	2600940001B	24-MAY-2000	00-05-0958A	02
05	MI	WILLIAMSTOWN, TOWNSHIP OF	2600950005A	07-MAR-2000	00-05-1456A	02

Region	State	Community	Map panel	Determination date	Case No.	Type
05	MI	WINDSOR, CHARTER TOWNSHIP OF	2600710005C	21-MAR-2000	00-05-1034A	01
05	MI	ZILWAUKEE, CITY OF	26145C0085D	02-MAR-2000	00-05-1292A	02
05	MI	ZILWAUKEE, CITY OF	26145C0085D	19-APR-2000	00-05-2648A	02
05	MN	ANDOVER, CITY OF	2706890015B	14-JAN-2000	00-05-0632A	01
05	MN	AITKIN COUNTY	2706280500B	23-JUN-2000	00-05-3340A	02
05	MN	AITKIN COUNTY	2706280240C	23-JUN-2000	00-05-4002A	02
05	MN	BARNUM, CITY OF	270040 B	19-JAN-2000	00-05-1190A	02
05	MN	BENTON COUNTY *	2700190100C	11-FEB-2000	00-05-0904A	17
05	MN	BLAINE, CITY OF	2700070005C	04-APR-2000	00-05-1642A	02
05	MN	BLAINE, CITY OF	2700070005C	05-JAN-2000	00-05-1026A	02
05	MN	BLAINE, CITY OF	2700070005C	18-APR-2000	00-05-2310A	02
05	MN	BLAINE, CITY OF	2700070005C	20-APR-2000	98-05-3486P	05
05	MN	BLAINE, CITY OF	2700070005C	29-FEB-2000	00-05-1462A	02
05	MN	BLAINE, CITY OF	2700070010C	21-MAR-2000	99-05-7346A	01
05	MN	BROOKLYN CENTER, CITY OF	2701510003B	07-MAR-2000	00-05-1430A	01
05	MN	BROOKLYN PARK, CITY OF	2701520001C	02-MAY-2000	00-05-0622A	02
05	MN	BROOKLYN PARK, CITY OF	2701520003D	30-MAR-2000	00-05-1404A	02
05	MN	BROOKLYN PARK, CITY OF	2701520003D	30-MAR-2000	00-05-1714A	02
05	MN	BROOKLYN PARK, CITY OF	2701520004C	12-JAN-2000	99-05-6704A	02
05	MN	CAMBRIDGE, CITY OF	2701980005A	30-MAR-2000	00-05-1890A	01
05	MN	CARVER COUNTY*	2700490105C	19-JAN-2000	99-05-2978A	02
05	MN	CENTERVILLE, CITY OF	2700080001C	04-APR-2000	00-05-1696A	02
05	MN	CHISAGO COUNTY *	2706820175C	04-FEB-2000	00-05-1692A	02
05	MN	CHISAGO COUNTY *	2706820175C	11-APR-2000	00-05-2062A	02
05	MN	CHISAGO COUNTY *	2706820200C	16-MAY-2000	99-05-5596A	02
05	MN	COON RAPIDS,CITY OF	2700110001A	13-APR-2000	00-05-2228A	02
05	MN	CROOKSTON, CITY OF	2703640002C	19-JAN-2000	00-05-1212A	02
05	MN	CROSSLAKE, CITY OF	270095 B	16-MAR-2000	00-05-1926A	02
05	MN	CROSSLAKE, CITY OF	270095 B	23-MAR-2000	00-05-2102A	02
05	MN	CROSSLAKE, CITY OF	270095 B	25-MAY-2000	00-05-3520A	02
05	MN	DAKOTA COUNTY *	2701010250B	24-FEB-2000	00-05-1752A	02
05	MN	DELANO, CITY OF	2705390001C	14-MAR-2000	00-05-1250A	01
05	MN	FARIBAULT, CITY OF	2704040001C	27-APR-2000	00-05-0850A	02
05	MN	FREEBORN COUNTY *	2701340185B	10-MAY-2000	00-05-3204A	02
05	MN	GOODHUE COUNTY *	2701400125A	28-JAN-2000	00-05-1364A	02
05	MN	GREENFIELD, CITY OF	2706730010C	02-FEB-2000	99-05-4952A	02
05	MN	HAM LAKE, CITY OF	2706740005B	04-FEB-2000	00-05-0342A	02
05	MN	ISANTI COUNTY *	2701970010A	23-MAR-2000	00-05-1730A	02
05	MN	ISANTI COUNTY *	2701970025B	05-JAN-2000	00-05-1094A	02
05	MN	ISANTI COUNTY *	2701970035B	17-FEB-2000	00-05-2028A	02
05	MN	ISANTI COUNTY *	2701970035B	19-JAN-2000	00-05-1390A	02
05	MN	ISANTI COUNTY *	2701970055A	04-FEB-2000	00-05-1674A	02
05	MN	ISANTI COUNTY *	2701970060B	21-MAR-2000	00-05-2362A	02
05	MN	ISANTI COUNTY *	2701970065B	21-MAR-2000	00-05-2344A	02
05	MN	ISANTI COUNTY *	2701970080B	02-FEB-2000	00-05-1218A	02
05	MN	ISANTI COUNTY *	2701970085A	18-APR-2000	00-05-3070A	02
05	MN	ISANTI, CITY OF	2701990001C	25-APR-2000	00-05-1504A	02
05	MN	ITASCA COUNTY *	2702000775A	07-MAR-2000	00-05-0610A	02
05	MN	KOOCHICHING COUNTY *	2702330006B	28-JAN-2000	00-05-1236A	02
05	MN	KOOCHICHING COUNTY	2702330010C	23-JUN-2000	00-05-3050A	02
05	MN	LAKEVILLE, CITY OF	2701070003C	04-FEB-2000	00-05-0454A	02
05	MN	LAKEVILLE, CITY OF	2701070004C	21-JAN-2000	00-05-1008A	02
05	MN	LINO LAKES, CITY OF	2700150010B	04-APR-2000	99-05-7114A	02
05	MN	LINO LAKES, CITY OF	2700150010B	07-APR-2000	99-05-7178A	02
05	MN	LINO LAKES, CITY OF	2700150010B	07-APR-2000	99-05-7196A	02
05	MN	LINO LAKES, CITY OF	2700150010B	10-MAY-2000	99-05-7182A	02
05	MN	LINO LAKES, CITY OF	2700150010B	18-APR-2000	00-05-2334A	02
05	MN	LINO LAKES, CITY OF	2700150010B	19-JAN-2000	99-05-5058A	01
05	MN	LINO LAKES, CITY OF	2700150010B	19-MAY-2000	99-05-7180A	02
05	MN	MAPLE GROVE, CITY OF	2701690001B	19-JAN-2000	00-05-0664A	01
05	MN	MEDINA, CITY OF	2701710001B	07-MAR-2000	00-05-1736A	02
05	MN	MEEKER COUNTY *	2702800005B	21-JAN-2000	99-05-5446A	02
05	MN	MOORHEAD, CITY OF	2752440005D	04-FEB-2000	00-05-1540A	02
05	MN	MOORHEAD, CITY OF	2752440010D	04-MAY-2000	00-05-1878A	02
05	MN	MORRISON COUNTY *	2706170025B	16-MAY-2000	00-05-0906A	02
05	MN	MOUNDS VIEW, CITY OF	2703790001C	14-JAN-2000	99-05-7332A	02
05	MN	MOWER COUNTY *	2703070090A	18-MAY-2000	00-05-1418A	17
05	MN	ORONO, CITY OF	2701780010C	06-JUN-2000	00-05-3018A	02
05	MN	POLK COUNTY *	2705030025B	05-JAN-2000	99-05-6742A	01
05	MN	POLK COUNTY *	2705030025B	09-FEB-2000	00-05-1802A	02
05	MN	PRIOR LAKE, CITY OF	2704320003C	07-MAR-2000	00-05-1750A	02
05	MN	PRIOR LAKE, CITY OF	2704320004C	21-MAR-2000	00-05-2646A	02
05	MN	ROYALTON, CITY OF	2703030001B	14-MAR-2000	00-05-0600A	02

Region	State	Community	Map panel	Determination date	Case No.	Type
05	MN	SARTELL, CITY OF	2704600005D	04-APR-2000	00-05-0428A	02
05	MN	SAVAGE, CITY OF	2704330001C	29-FEB-2000	99-05-7092A	02
05	MN	SHERBURNE COUNTY *	2704350025C	09-MAY-2000	00-05-3432A	02
05	MN	SHERBURNE COUNTY *	2704350095C	04-APR-2000	00-05-1916A	02
05	MN	ST. LOUIS COUNTY *	2704160775C	05-JAN-2000	00-05-1168A	02
05	MN	ST. LOUIS COUNTY *	2704161395C	09-FEB-2000	00-05-1196X	02
05	MN	STEARNS COUNTY*	2705460125A	02-MAR-2000	99-05-6690A	02
05	MN	STEARNS COUNTY*	2705460355B	07-MAR-2000	00-05-1314A	02
05	MN	WASHINGTON COUNTY *	2704990125B	07-MAR-2000	00-05-0562A	02
05	MN	WATERTOWN, CITY OF	2700560001C	25-APR-2000	00-05-0010A	01
05	MN	WHITE BEAR,TOWNSHIP OF	2706880005B	05-JAN-2000	00-05-0854A	02
05	MN	WHITE BEAR,TOWNSHIP OF	2706880005B	12-JAN-2000	00-05-0488A	02
05	MN	WHITE BEAR,TOWNSHIP OF	2706880005B	14-MAR-2000	00-05-0630A	02
05	MN	WINONA, CITY OF	2752500006D	16-MAY-2000	00-05-1740A	02
05	MN	WRIGHT COUNTY *	2705340009B	02-MAY-2000	00-05-2514A	02
05	OH	ASHTABULA COUNTY *	3900100075B	11-MAY-2000	00-05-1428A	02
05	OH	ATHENS COUNTY*	3907600175B	02-FEB-2000	00-05-1378A	02
05	OH	AUGLAIZE COUNTY *	39011C0025C	30-MAR-2000	99-05-6752A	02
05	OH	AUGLAIZE COUNTY *	39011C0090C	05-MAY-2000	00-05-2132A	02
05	OH	AUGLAIZE COUNTY *	39011C0090C	11-FEB-2000	00-05-1474A	02
05	OH	AUGLAIZE COUNTY *	39011C0090C	21-JAN-2000	99-05-7098A	01
05	OH	AVON, CITY OF	3903480005C	09-MAY-2000	00-05-2124A	02
05	OH	BEAVERCREEK, CITY OF	3908760002B	05-JAN-2000	00-05-0516A	02
05	OH	BEAVERCREEK, CITY OF	3908760002B	05-JAN-2000	99-05-6866A	02
05	OH	BEAVERCREEK, CITY OF	3908760002B	30-MAY-2000	00-05-2510A	02
05	OH	BELLBROOK, CITY OF	3901940001B	04-MAY-2000	00-05-3130X	02
05	OH	BELLBROOK, CITY OF	3901940001B	09-FEB-2000	99-05-5440A	02
05	OH	BEXLEY, CITY OF	39049C0255G	14-JAN-2000	00-05-1388X	01
05	OH	BROOKLYN, CITY OF	3901000001C	30-MAR-2000	00-05-1176A	02
05	OH	BUTLER COUNTY *	3900370130B	19-MAY-2000	00-05-1986A	02
05	OH	BUTLER COUNTY	3900370070C	23-JUN-2000	00-05-3274A	02
05	OH	BUTLER COUNTY	3900370070C	16-JUN-2000	00-05-3276A	02
05	OH	CARROLL COUNTY *	3907630025B	30-MAY-2000	99-05-5954A	02
05	OH	CELINA, CITY OF	3903930005C	10-MAY-2000	00-05-2188A	02
05	OH	CLERMONT COUNTY	3900650085D	25-MAY-2000	00-05-3278A	02
05	OH	COLUMBUS, CITY OF	39049C0045H	30-MAR-2000	00-05-2802A	01
05	OH	COLUMBUS, CITY OF	39049C0158G	07-MAR-2000	00-05-0092A	01
05	OH	DELAWARE COUNTY *	39041C0240J	02-FEB-2000	00-05-1458A	02
05	OH	DUBLIN, CITY OF	39049C0106G	30-MAY-2000	00-05-1780A	02
05	OH	ERIE COUNTY *	3901530050B	05-MAY-2000	00-05-1078A	02
05	OH	ERIE COUNTY *	3901530075C	19-JAN-2000	00-05-0218A	02
05	OH	FAIRFIELD COUNTY *	3901580015D	27-APR-2000	00-05-0412A	01
05	OH	FAIRFIELD COUNTY *	3901580185D	28-MAR-2000	00-05-1964A	02
05	OH	FINDLAY, CITY OF	3902440005C	22-FEB-2000	00-05-0602A	02
05	OH	FINDLAY, CITY OF	3902440009B	11-APR-2000	00-05-2588X	02
05	OH	FINDLAY, CITY OF	3902440009B	15-FEB-2000	00-05-1470A	02
05	OH	FRANKLIN COUNTY*	39049C0186G	17-FEB-2000	00-05-1592A	02
05	OH	FRANKLIN COUNTY*	39049C0290G	11-APR-2000	00-05-1384A	01
05	OH	FRANKLIN COUNTY*	39049C0290G	15-FEB-2000	00-05-1102A	02
05	OH	FRANKLIN COUNTY*	39049C0327G	25-APR-2000	00-05-0378A	02
05	OH	FRANKLIN COUNTY*	39049C0376H	19-APR-2000	00-05-1682A	02
05	OH	GATES MILLS, VILLAGE OF	3905930002B	14-JAN-2000	00-05-0444A	02
05	OH	GERMANTOWN, VILLAGE OF	3904110001B	17-FEB-2000	00-05-1120A	02
05	OH	GRANDVIEW HEIGHTS, CITY OF	39049C0231G	17-MAR-2000	00-05-1966A	02
05	OH	GROVE CITY, CITY OF	39049C0238G	04-APR-2000	00-05-0722A	01
05	OH	GROVEPORT, VILLAGE OF	39049C0270G	09-MAR-2000	00-05-1594A	01
05	OH	GUERNSEY COUNTY *	39059C0094C	27-APR-2000	00-05-1132A	02
05	OH	GUERNSEY COUNTY *	39059C0113C	19-APR-2000	00-05-0696A	01
05	OH	HARRISON COUNTY *	3902550003A	23-MAR-2000	00-05-0692A	02
05	OH	HARRISON, CITY OF	3902200005C	28-JAN-2000	99-05-7340A	02
05	OH	JACKSON, CITY OF	3902920005D	13-APR-2000	00-05-1412A	02
05	OH	JACKSON, CITY OF	3902920005D	02-JUN-2000	00-05-2954A	01
05	OH	KETTERING, CITY OF	3904120020B	03-MAY-2000	99-05-7396A	02
05	OH	KETTERING, CITY OF	3904120020B	07-MAR-2000	00-05-0240A	02
05	OH	KETTERING, CITY OF	3904120020B	11-APR-2000	00-05-0114A	02
05	OH	KETTERING, CITY OF	3904120020B	22-FEB-2000	00-05-0264A	02
05	OH	KETTERING, CITY OF	3904120020B	24-FEB-2000	00-05-0126A	02
05	OH	KETTERING, CITY OF	3904120020B	30-MAY-2000	00-05-2242A	02
05	OH	KNOX COUNTY	3903060070C	30-JUN-2000	00-05-3978A	02
05	OH	LAKE COUNTY *	3907710027C	21-MAR-2000	00-05-0954A	02
05	OH	LAKE COUNTY *	3907710028C	14-JAN-2000	99-05-6030P	05
05	OH	LANCASTER, CITY OF	3901610003D	10-FEB-2000	00-05-0838A	17
05	OH	LANCASTER, CITY OF	3901610005D	29-FEB-2000	99-05-7398A	02

Region	State	Community	Map panel	Determination date	Case No.	Type
05	OH	LICKING COUNTY *	3903280100B	30-MAR-2000	00-05-2162A	01
05	OH	LICKING COUNTY *	3903280125B	21-JAN-2000	00-05-1226A	02
05	OH	LOGAN COUNTY *	3907720100C	25-APR-2000	99-05-6242A	02
05	OH	LORAIN COUNTY*	3903460095B	15-FEB-2000	00-05-0414A	02
05	OH	LUCAS COUNTY*	3903590015B	20-APR-2000	00-05-0310A	01
05	OH	LUCAS COUNTY*	3903590015B	22-FEB-2000	97-05-4652P	05
05	OH	LUCAS COUNTY*	3903590050B	22-FEB-2000	97-05-4652P	.....
05	OH	MANSFIELD, CITY OF	3904770009C	09-MAR-2000	00-05-1630A	02
05	OH	MANSFIELD, CITY OF	3904770009C	25-APR-2000	00-05-3248A	02
05	OH	MEDINA COUNTY *	3903780055B	29-FEB-2000	00-05-1444A	02
05	OH	MERCER COUNTY *	3903920100B	09-MAY-2000	00-05-2450A	02
05	OH	MERCER COUNTY *	3903920100B	13-APR-2000	00-05-1670A	02
05	OH	MERCER COUNTY *	3903920100B	28-JAN-2000	00-05-0754A	02
05	OH	MERCER COUNTY *	3903920100B	28-JAN-2000	00-05-0930A	02
05	OH	MILLERSPORT, VILLAGE OF	390689 A	15-FEB-2000	99-05-7314A	02
05	OH	MONTGOMERY COUNTY *	3907750035C	25-APR-2000	00-05-1024A	02
05	OH	MONTGOMERY COUNTY *	3907750040C	04-APR-2000	00-05-1566A	02
05	OH	NEW LEXINGTON, VILLAGE OF	3904430001C	18-APR-2000	00-05-2094A	02
05	OH	NORTH OLMSTED, CITY OF	3901200002C	08-JUN-2000	00-05-3336A	02
05	OH	NORTH ROYALTON, CITY OF	3901210006B	14-MAR-2000	00-05-0004A	01
05	OH	OTTAWA COUNTY *	3904320025A	15-FEB-2000	00-05-1408A	02
05	OH	OTTAWA COUNTY *	3904320050B	07-JAN-2000	00-05-0818A	02
05	OH	OTTAWA COUNTY *	3904320125B	04-APR-2000	00-05-1386A	01
05	OH	OTTAWA, VILLAGE OF	3904720002C	09-FEB-2000	00-05-0892A	02
05	OH	PARMA, CITY OF	3901230004B	18-APR-2000	99-05-7368A	02
05	OH	PERRY COUNTY *	3907780025C	19-JAN-2000	99-05-6572A	02
05	OH	PORTAGE COUNTY*	390453 C	28-JAN-2000	00-05-0886A	02
05	OH	PUTNAM COUNTY *	3904650100B	19-JAN-2000	99-05-7228A	02
05	OH	PUTNAM COUNTY *	3904650100B	24-FEB-2000	00-05-0720A	01
05	OH	PUTNAM COUNTY *	3904650100B	27-APR-2000	00-05-1148A	02
05	OH	PUTNAM COUNTY *	3904650105B	19-JAN-2000	99-05-7108A	17
05	OH	RICHLAND COUNTY*	3904760175B	16-FEB-2000	99-05-5826A	02
05	OH	ROAMING SHORES, VILLAGE OF	3908850001A	18-APR-2000	99-05-7224A	02
05	OH	ROSS COUNTY *	3904800150B	14-MAR-2000	00-05-1738A	02
05	OH	RUSSIA, VILLAGE OF	3908800001A	05-APR-2000	00-05-2258A	02
05	OH	SABINA, VILLAGE OF	3906270001B	19-JAN-2000	00-05-0874A	02
05	OH	SANDUSKY COUNTY *	3904860105B	17-FEB-2000	00-05-0926A	02
05	OH	SANDUSKY COUNTY *	3904860200B	28-JAN-2000	99-05-6096A	02
05	OH	SENECA COUNTY *	3907790085B	24-FEB-2000	00-05-1884X	02
05	OH	SHAKER HEIGHTS, CITY OF	3901290004C	13-APR-2000	00-05-1610A	02
05	OH	SHEFFIELD, VILLAGE OF	3903540005B	19-JAN-2000	99-05-249P	05
05	OH	SHELBY COUNTY *	3905030060C	17-MAY-2000	00-05-009P	05
05	OH	SPRINGBORO, CITY OF	3905640001B	12-JAN-2000	00-05-1050A	01
05	OH	STARK COUNTY*	3907800085B	02-MAY-2000	00-05-1924A	01
05	OH	STARK COUNTY*	3907800085B	19-JAN-2000	00-05-0468A	02
05	OH	STOW, CITY OF	3905320005B	05-APR-2000	00-05-2180A	02
05	OH	TOLEDO, CITY OF	3953730010A	28-JAN-2000	00-05-1372A	02
05	OH	TOLEDO, CITY OF	3953730020A	02-FEB-2000	00-05-0976A	02
05	OH	TROTWOOD, CITY OF	3904170002B	28-MAR-2000	99-05-057P	05
05	OH	TRUMBULL COUNTY *	3905350100B	07-MAR-2000	00-05-0484A	02
05	OH	TUSCARAWAS COUNTY		25-MAY-2000	00-05-2950A	02
05	OH	TUSCARAWAS COUNTY	3907820055B	30-JUN-2000	00-05-3374A	02
05	OH	UNION COUNTY *	3908080050B	14-MAR-2000	00-05-1790A	02
05	OH	WALBRIDGE, VILLAGE OF	3906350001A	19-JAN-2000	99-05-6458A	02
05	OH	WAPAKONETA, CITY OF	39011C0105C	14-MAR-2000	00-05-1178A	02
05	OH	WASHINGTON COUNTY *	3905660125B	19-APR-2000	00-05-2208A	02
05	OH	WASHINGTON COUNTY *	3905660150B	30-MAY-2000	00-05-1520A	01
05	OH	WESTLAKE, CITY OF	3901360006C	01-FEB-2000	99-05-107P	05
05	OH	WOOD COUNTY *	3908090012C	11-APR-2000	00-05-0682A	02
05	OH	XENIA, CITY OF	3901970005B	12-MAY-2000	00-05-2946A	02
05	WI	BARRON COUNTY *	5505680175C	23-MAR-2000	00-05-0636A	02
05	WI	BARRON COUNTY *	5505680275B	02-FEB-2000	99-05-7160A	02
05	WI	BARRON COUNTY *	5505680275B	23-MAR-2000	00-05-2508X	02
05	WI	BAYFIELD COUNTY *	5505390022B	09-FEB-2000	99-05-5122A	02
05	WI	BAYFIELD COUNTY *	5505390023B	16-MAR-2000	00-05-0216A	02
05	WI	BIRCHWOOD, VILLAGE OF	550574 B	30-MAR-2000	00-05-2408A	02
05	WI	BROOKFIELD, CITY OF	5504780005B	07-MAR-2000	00-05-0450A	02
05	WI	BROWN COUNTY *	5500200025B	11-MAY-2000	00-05-0430A	01
05	WI	BROWN COUNTY *	5500200100C	02-MAY-2000	00-05-2936A	02
05	WI	BROWN COUNTY *	5500200125B	04-APR-2000	99-05-7214A	02
05	WI	BURNETT COUNTY *	5500320200B	04-APR-2000	00-05-1832A	02
05	WI	BURNETT COUNTY *	5500320200B	12-APR-2000	00-05-1876A	02
05	WI	BURNETT COUNTY *	5500320500B	12-APR-2000	00-05-1874A	02

Region	State	Community	Map panel	Determination date	Case No.	Type
05	WI	BURNETT COUNTY *	5500320500B	17-MAY-2000	00-05-3656X	02
05	WI	BURNETT COUNTY	5500320500B	25-MAY-2000	00-05-3022A	02
05	WI	CASCADE, VILLAGE OF	5504250001B	25-FEB-2000	00-05-2096A	02
05	WI	CEDARBURG, CITY OF	55089C0064D	16-MAR-2000	99-05-7252A	02
05	WI	CHIPPEWA COUNTY *	5555490050B	02-MAY-2000	00-05-1544A	02
05	WI	CHIPPEWA COUNTY *	5555490200C	12-JAN-2000	00-05-0276A	02
05	WI	CHIPPEWA COUNTY *	5555490200C	16-MAY-2000	00-05-3430X	02
05	WI	CHIPPEWA COUNTY *	5555490200C	28-MAR-2000	00-05-1546A	02
05	WI	CHIPPEWA COUNTY *	5555490275C	06-APR-2000	00-05-1522A	02
05	WI	COLUMBIA COUNTY *	5505810150C	09-MAY-2000	00-05-0890A	02
05	WI	COLUMBIA COUNTY *	5505810200C	14-MAR-2000	00-05-0888A	02
05	WI	DE PERE, CITY OF	5500210005C	02-MAY-2000	00-05-2878A	02
05	WI	DE PERE, CITY OF	5500210005C	12-APR-2000	00-05-0330A	02
05	WI	DODGE COUNTY	5500940205B	28-JUN-2000	00-05-4046A	02
05	WI	DOOR COUNTY *	5501090085A	02-FEB-2000	99-05-7048A	02
05	WI	DUNN COUNTY *	5501180125A	29-FEB-2000	00-05-1746A	02
05	WI	EAU CLAIRE COUNTY *	5555520075B	16-MAR-2000	00-05-1216A	02
05	WI	EMBARRASS, VILLAGE OF	550495 B	09-MAR-2000	00-05-1808A	02
05	WI	EMBARRASS, VILLAGE OF	550495 B	22-FEB-2000	00-05-1810A	02
05	WI	EPHRAIM, VILLAGE OF	5506110001A	25-APR-2000	99-05-6986A	02
05	WI	FOND DU LAC COUNTY *	5501310030B	02-MAR-2000	99-05-7304A	02
05	WI	FOND DU LAC, CITY OF	5501360005D	02-MAY-2000	00-05-3190A	02
05	WI	FOND DU LAC, CITY OF	5501360005D	04-FEB-2000	99-05-7306A	01
05	WI	FOND DU LAC, CITY OF	5501360005D	05-JAN-2000	00-05-0124A	02
05	WI	FOND DU LAC, CITY OF	5501360005D	07-JAN-2000	99-05-6750A	02
05	WI	FOND DU LAC, CITY OF	5501360005D	09-MAY-2000	00-05-1700A	02
05	WI	FOND DU LAC, CITY OF	5501360005D	13-APR-2000	00-05-1312A	02
05	WI	FOND DU LAC, CITY OF	5501360005D	16-MAY-2000	00-05-3088A	02
05	WI	FOND DU LAC, CITY OF	5501360005D	20-APR-2000	00-05-1578A	02
05	WI	FOND DU LAC, CITY OF	5501360005D	21-JAN-2000	00-05-1058A	01
05	WI	FOND DU LAC, CITY OF	5501360005D	25-APR-2000	00-05-1438A	02
05	WI	FOND DU LAC, CITY OF	5501360005D	28-JAN-2000	99-05-7072A	02
05	WI	FOND DU LAC, CITY OF	5501360005D	29-FEB-2000	00-05-1634A	02
05	WI	FRANKLIN, CITY OF	5502730005B	04-FEB-2000	99-05-5216A	17
05	WI	GLENDALE, CITY OF	5502750005C	22-FEB-2000	00-05-0398A	02
05	WI	GRANT COUNTY *	5555570275B	16-MAY-2000	99-05-6886A	01
05	WI	GREEN LAKE COUNTY *	5501650001A	30-MAY-2000	00-05-2204A	02
05	WI	GREEN LAKE COUNTY *	5501650003A	07-APR-2000	00-05-2146A	02
05	WI	GREEN LAKE COUNTY *	5501650003A	13-APR-2000	00-05-2104A	02
05	WI	GREEN LAKE COUNTY *	5501650003A	25-MAY-2000	00-05-2000A	02
05	WI	GREEN LAKE COUNTY *	5501650005B	28-APR-2000	00-05-2108A	02
05	WI	HARTFORD, CITY OF	5504730001B	10-JAN-2000	98-05-239P	06
05	WI	HOWARD, VILLAGE OF	5500230005B	13-APR-2000	00-05-3200A	02
05	WI	JEFFERSON COUNTY *	5501910200B	04-MAY-2000	99-05-6100A	02
05	WI	JEFFERSON COUNTY *	5501910225A	13-APR-2000	00-05-3124A	02
05	WI	JEFFERSON COUNTY *	5501910250B	04-APR-2000	00-05-1914A	02
05	WI	JEFFERSON, CITY OF	5555610001B	23-FEB-2000	99-05-7050A	01
05	WI	JUNEAU COUNTY *	55057C0090C	20-APR-2000	00-05-1366A	02
05	WI	KENDALL, VILLAGE OF	5502870001B	04-FEB-2000	99-05-4492A	02
05	WI	KENOSHA COUNTY *	5505230040B	18-MAY-2000	00-05-1786A	02
05	WI	LA CROSSE COUNTY *	5502170120A	07-MAR-2000	00-05-1872A	02
05	WI	LA CROSSE COUNTY *	5502170120A	14-JAN-2000	00-05-0504A	02
05	WI	LA CROSSE COUNTY *	5502170120A	21-JAN-2000	99-05-6040A	02
05	WI	LA CROSSE, CITY OF	5555620005B	14-MAR-2000	00-05-0928A	02
05	WI	LA CROSSE, CITY OF	5555620005B	21-MAR-2000	00-05-2090A	01
05	WI	LAVALLE, VILLAGE OF	5503950001C	02-MAR-2000	00-05-1576A	02
05	WI	LODI, CITY OF	5500610001B	09-MAY-2000	00-05-1584A	02
05	WI	MARATHON COUNTY *	5502450375B	02-MAY-2000	00-05-3102A	02
05	WI	MARATHON COUNTY *	5502450375B	09-MAY-2000	00-05-3240A	02
05	WI	MARATHON COUNTY *	5502450375B	11-APR-2000	00-05-2112A	02
05	WI	MARATHON COUNTY *	5502450375B	12-JAN-2000	99-05-5900A	02
05	WI	MARATHON COUNTY *	5502450400B	28-MAR-2000	00-05-0808A	02
05	WI	MARATHON COUNTY *	5502450525B	18-APR-2000	00-05-0704A	02
05	WI	MARINETTE COUNTY *	5502590625B	02-FEB-2000	99-05-7390A	02
05	WI	MARINETTE COUNTY *	5502590625B	04-APR-2000	99-05-6892A	02
05	WI	MARINETTE COUNTY *	5502590765B	25-APR-2000	00-05-3114A	02
05	WI	MARQUETTE COUNTY*	5506010125B	14-MAR-2000	00-05-0280A	02
05	WI	MARQUETTE COUNTY	5506010025B	03-MAY-2000	00-05-2836A	02
05	WI	MENASHA, CITY OF	5505100005C	05-JAN-2000	00-05-0068A	02
05	WI	MENASHA, CITY OF	5505100005C	05-JAN-2000	99-05-7194A	02
05	WI	MENASHA, CITY OF	5505100005C	11-APR-2000	00-05-1238A	02
05	WI	MENASHA, CITY OF	5505100005C	14-JAN-2000	99-05-6110A	02
05	WI	MENASHA, CITY OF	5505100005C	18-APR-2000	00-05-2778A	02

Region	State	Community	Map panel	Determination date	Case No.	Type
05	WI	MENASHA, CITY OF	5505100005C	20-APR-2000	00-05-2896A	02
05	WI	MENASHA, CITY OF	5505100005C	20-APR-2000	00-05-2904A	02
05	WI	MENASHA, CITY OF	5505100005C	25-APR-2000	00-05-2898A	02
05	WI	MEQUON, CITY OF	55089C0085D	23-MAY-2000	00-05-0296A	02
05	WI	MERRIMAC, VILLAGE OF	550398 B	12-JAN-2000	99-05-6078A	02
05	WI	MILWAUKEE, CITY OF	5502780015B	16-MAR-2000	00-05-0208A	02
05	WI	MUSKEGO, CITY OF	5504860001B	18-APR-2000	00-05-0292A	02
05	WI	NECEDAH, VILLAGE OF	55057C0090C	15-FEB-2000	00-05-0608A	02
05	WI	NEW GLARUS, VILLAGE OF	5501640001B	14-MAR-2000	00-05-0898A	02
05	WI	OSHKOSH, CITY OF	5505110020D	02-MAY-2000	00-05-1604A	01
05	WI	OSHKOSH, CITY OF	5505110020D	16-MAY-2000	00-05-2894A	02
05	WI	OUTAGAMIE COUNTY *	5503020050B	21-JAN-2000	00-05-0482A	02
05	WI	OUTAGAMIE COUNTY *	5503020050B	22-FEB-2000	99-05-4034A	02
05	WI	OUTAGAMIE COUNTY *	5503020050B	23-MAY-2000	00-05-0946A	02
05	WI	OUTAGAMIE COUNTY *	5503020050B	29-MAR-2000	99-05-6580A	02
05	WI	OUTAGAMIE COUNTY *	5503020075B	17-FEB-2000	00-05-2012A	02
05	WI	OUTAGAMIE COUNTY *	5503020084C	16-MAR-2000	00-05-0860A	02
05	WI	OUTAGAMIE COUNTY *	5503020084C	25-APR-2000	00-05-2424A	02
05	WI	OUTAGAMIE COUNTY *	5503020150B	09-MAR-2000	99-05-7184A	02
05	WI	OZAUKEE COUNTY *	55089C0056D	28-JAN-2000	00-05-1562X	01
05	WI	PEWAUKEE, VILLAGE OF	5504890002B	22-MAR-2000	99-05-5990P	05
05	WI	PLEASANT PRAIRIE, VILLAGE OF	5506130005B	16-MAY-2000	00-05-2416A	02
05	WI	POLK COUNTY *	5505770075B	28-MAR-2000	99-05-6828A	02
05	WI	PORTAGE COUNTY *	5505720150C	01-MAR-2000	99-05-6916A	02
05	WI	PORTAGE COUNTY *	5505720150C	01-MAR-2000	99-05-7030A	02
05	WI	PORTAGE COUNTY *	5505720150C	02-MAY-2000	00-05-2868A	02
05	WI	PORTAGE COUNTY *	5505720150C	07-MAR-2000	00-05-1826A	02
05	WI	PORTAGE COUNTY *	5505720150C	25-APR-2000	00-05-2454A	02
05	WI	PORTAGE COUNTY *	5505720250C	05-MAY-2000	00-05-1844A	02
05	WI	PORTAGE COUNTY *	5505720250C	12-APR-2000	00-05-1820A	02
05	WI	PORTAGE COUNTY *	5505720250C	25-MAY-2000	00-05-1762A	02
05	WI	PULASKI, VILLAGE OF	5500240001B	07-MAR-2000	00-05-0680A	01
05	WI	RACINE COUNTY *	5503470010B	09-MAR-2000	00-05-0660A	01
05	WI	RACINE COUNTY *	5503470010B	16-MAY-2000	00-05-2710A	02
05	WI	RACINE COUNTY *	5503470075B	30-MAR-2000	00-05-0090A	02
05	WI	RACINE COUNTY *	5503470080B	16-FEB-2000	00-05-0532A	02
05	WI	RACINE, CITY OF	555575 A	26-MAY-2000	00-05-2272A	02
05	WI	RICHLAND COUNTY	5503560095B	18-APR-2000	00-05-2542A	02
05	WI	RUSK COUNTY*	5506020225B	29-FEB-2000	00-05-1754A	02
05	WI	RUSK COUNTY*	5506020245B	02-MAR-2000	00-05-1574A	02
05	WI	SAUK COUNTY *	5503910250B	01-JUN-2000	00-05-2674A	02
05	WI	SAUKVILLE, VILLAGE OF	55089C0056D	11-FEB-2000	00-05-0254A	01
05	WI	SAUKVILLE, VILLAGE OF	55089C0056D	16-MAR-2000	99-05-7028A	02
05	WI	SAWYER COUNTY *	5505910025B	02-MAY-2000	00-05-3212A	02
05	WI	SAWYER COUNTY *	5505910045B	13-APR-2000	00-05-1308A	02
05	WI	SAWYER COUNTY *	5505910100B	16-MAR-2000	00-05-1112A	02
05	WI	SAWYER COUNTY *	5505910100B	30-MAY-2000	00-05-2368A	02
05	WI	SAWYER COUNTY *	5505910125B	24-FEB-2000	99-05-6638A	02
05	WI	SAWYER COUNTY *	5505910125B	28-JAN-2000	99-05-7020A	02
05	WI	SHAWANO COUNTY *	5504120150B	09-FEB-2000	00-05-0042A	02
05	WI	SHAWANO COUNTY *	5504120150B	09-MAR-2000	99-05-6990A	02
05	WI	SHAWANO COUNTY *	5504120150B	14-MAR-2000	99-05-7204A	02
05	WI	SHAWANO COUNTY *	5504120150B	18-APR-2000	00-05-2248A	02
05	WI	SHEBOYGAN COUNTY *	5504240125B	05-JAN-2000	99-05-5816A	17
05	WI	SHIOCTON, VILLAGE OF	5503090001B	04-APR-2000	00-05-0272A	02
05	WI	SHIOCTON, VILLAGE OF	5503090001B	07-APR-2000	00-05-0616A	02
05	WI	SHIOCTON, VILLAGE OF	5503090001B	02-JUN-2000	00-05-3054A	02
05	WI	STANLEY, CITY OF	550047 B	01-MAR-2000	00-05-0678A	01
05	WI	STEVENS POINT, CITY OF	5503420005B	16-MAR-2000	00-05-1080A	02
05	WI	STEVENS POINT, CITY OF	5503420005B	16-MAR-2000	00-05-1082A	02
05	WI	STEVENS POINT, CITY OF	5503420005B	16-MAR-2000	00-05-1084A	02
05	WI	STURGEON BAY, CITY OF	5501110005B	12-JAN-2000	99-05-6714A	01
05	WI	STURGEON BAY, CITY OF	5501110005B	18-MAY-2000	00-05-2196A	01
05	WI	TREMPEALEAU COUNTY *	555585 A	07-MAR-2000	00-05-0764A	02
05	WI	VERNON COUNTY *	5504500025B	25-MAY-2000	00-05-1770A	02
05	WI	VERNON COUNTY	5504500160B	14-JUN-2000	00-05-2972A	02
05	WI	WASHBURN COUNTY*	5506060075B	07-MAR-2000	00-05-0716A	02
05	WI	WASHBURN COUNTY*	5506060075B	07-MAR-2000	00-05-0752A	02
05	WI	WASHBURN COUNTY*	5506060125B	29-MAR-2000	00-05-1880A	02
05	WI	WASHBURN COUNTY	5506060075B	28-JUN-2000	00-05-3986A	02
05	WI	WASHINGTON COUNTY *	5504710020B	16-MAR-2000	00-05-0826A	01
05	WI	WASHINGTON COUNTY *	5504710085B	10-JAN-2000	98-05-239P	06
05	WI	WASHINGTON COUNTY *	5504710090B	26-MAY-2000	00-05-2570A	02

Region	State	Community	Map panel	Determination date	Case No.	Type
05	WI	WAUKESHA COUNTY*	5504760015B	25-APR-2000	00-05-1862A	01
05	WI	WAUKESHA COUNTY*	5504760040C	02-MAR-2000	00-05-0194A	17
05	WI	WAUKESHA COUNTY*	5504760040C	02-MAY-2000	00-05-0936A	02
05	WI	WAUKESHA COUNTY*	5504760040C	28-MAR-2000	99-05-6320A	02
05	WI	WAUKESHA COUNTY*	5504760115B	16-MAR-2000	00-05-1036A	02
05	WI	WAUKESHA COUNTY*	5504760115B	28-MAR-2000	00-05-0748A	02
05	WI	WAUPACA COUNTY*	5504920085A	04-APR-2000	00-05-0724A	02
05	WI	WAUPACA COUNTY*	5504920115A	06-MAR-2000	00-05-1490A	02
05	WI	WAUPACA COUNTY*	5504920115A	12-JAN-2000	00-05-0056A	02
05	WI	WAUPACA COUNTY*	5504920115A	28-MAR-2000	00-05-1202A	02
05	WI	WAUPACA COUNTY*	5504920160B	30-MAY-2000	00-05-3082C	02
05	WI	WAUPUN, CITY OF	5501080001E	14-JAN-2000	00-05-1114A	02
05	WI	WINNEBAGO COUNTY *	5505370025C	18-FEB-2000	99-05-6852A	02
05	WI	WINNEBAGO COUNTY *	5505370050C	14-MAR-2000	00-05-1260A	02
05	WI	WINNEBAGO COUNTY *	5505370100C	23-MAR-2000	00-05-1460A	01
05	WI	WINNEBAGO COUNTY *	5505370150C	07-MAR-2000	00-05-1812A	02
05	WI	WOOD COUNTY *	55141C0125E	28-MAR-2000	00-05-1222A	02
05	WI	WOOD COUNTY *	55141C0275E	18-MAY-2000	00-05-1968A	02
05	WI	WOOD COUNTY *	55141C0410E	20-APR-2000	00-05-1360A	02
05	WI	WOOD COUNTY *	55141C0420E	16-MAR-2000	00-05-1016A	02
06	AR	ASHLEY COUNTY	0500030365B	28-JUN-2000	00-06-615A	02
06	AR	BATESVILLE, CITY OF	0500910005B	18-APR-2000	99-06-2002A	17
06	AR	BENTON COUNTY	05007C0045E	24-FEB-2000	00-06-574A	02
06	AR	BRADLEY COUNTY	0504200200B	04-MAY-2000	00-06-789A	02
06	AR	CABOT, CITY OF	0503090005C	30-MAR-2000	00-06-490A	01
06	AR	CABOT, CITY OF	0503090005C	02-MAY-2000	00-06-843A	01
06	AR	CONWAY, CITY OF	05045C0130F	17-APR-2000	00-06-601A	02
06	AR	FAYETTEVILLE, CITY OF	05143C0083D	20-APR-2000	00-06-519A	02
06	AR	FORT SMITH, CITY OF	0550130005D	21-MAR-2000	99-06-1574P	05
06	AR	GARLAND COUNTY	05051C0050C	14-JUN-2000	00-06-848A	02
06	AR	JONESBORO, CITY OF	05031C0043C	14-JUN-2000	00-06-1030A	02
06	AR	JONESBORO, CITY OF	05031C0152C	16-JUN-2000	00-06-965A	01
06	AR	LINCOLN COUNTY	050445B	02-JUN-2000	00-06-1019A	02
06	AR	LITTLE ROCK, CITY OF	0501810021E	11-FEB-2000	00-06-316P	06
06	AR	LITTLE ROCK, CITY OF	0501810008E	01-JUN-2000	00-06-711P	06
06	AR	LITTLE ROCK, CITY OF	0501810010E	21-JUN-2000	00-06-717A	02
06	AR	LOWELL, CITY OF	05007C0165D	02-MAY-2000	00-06-358A	02
06	AR	MAYFLOWER, CITY OF	05045C0210E	30-MAR-2000	00-06-785A	02
06	AR	MCGEHEE, CITY OF	0500680005C	28-JAN-2000	00-06-402A	02
06	AR	MCGEHEE, CITY OF	0500680005C	25-MAY-2000	00-06-832A	02
06	AR	PERRY, TOWN OF	05105C0127C	21-JUN-2000	99-06-2099V	19
06	AR	POCAHONTAS, CITY OF	0501830003B	24-MAR-2000	00-06-563A	01
06	AR	PULASKI COUNTY	0501790310E	03-MAY-2000	00-06-821A	02
06	AR	SALINE COUNTY	0501910220B	11-APR-2000	00-06-793A	02
06	AR	SALINE COUNTY	0501910270B	11-APR-2000	00-06-793A	02
06	AR	SEARCY, CITY OF	0502290005D	08-JUN-2000	00-06-934A	02
06	AR	SILOAM SPRINGS, CITY OF	05007C0208E	14-FEB-2000	00-06-505A	02
06	AR	UNION COUNTY	0502050006A	18-FEB-2000	00-06-530A	02
06	AR	UNION COUNTY	0502050004B	02-JUN-2000	00-06-531A	02
06	AR	VAN BUREN, CITY OF	05033C0170G	12-APR-2000	00-06-612A	02
06	AR	WEST MEMPHIS, CITY OF	0500550016D	05-MAY-2000	99-06-2096V	19
06	AR	WEST MEMPHIS, CITY OF	0500550019D	05-MAY-2000	99-06-2096V	19
06	LA	ACADIA PARISH	2200010175B	10-MAR-2000	00-06-660A	02
06	LA	ALEXANDRIA, CITY OF	2201460015F	25-APR-2000	00-06-700A	02
06	LA	ALEXANDRIA, CITY OF	2201460010F	12-APR-2000	00-06-867A	02
06	LA	ALLEN PARISH	2200090100B	28-JAN-2000	00-06-320A	02
06	LA	ALLEN PARISH	2200090225B	22-FEB-2000	00-06-529A	02
06	LA	ASCENSION PARISH	2200130040B	28-JUN-2000	00-06-1065A	02
06	LA	ASCENSION PARISH	2200130040B	15-MAR-2000	00-06-186A	01
06	LA	ASCENSION PARISH	2200130110D	16-FEB-2000	00-06-236A	02
06	LA	ASCENSION PARISH	2200130030C	06-JAN-2000	00-06-366A	02
06	LA	ASCENSION PARISH	2200130065C	27-JAN-2000	00-06-395A	02
06	LA	ASCENSION PARISH	2200130030C	10-FEB-2000	00-06-464A	02
06	LA	ASCENSION PARISH	2200130030C	28-APR-2000	00-06-479A	02
06	LA	ASCENSION PARISH	2200130040B	22-MAR-2000	00-06-510A	02
06	LA	ASCENSION PARISH	2200130040B	24-MAR-2000	00-06-593A	02
06	LA	ASCENSION PARISH	2200130040B	27-MAR-2000	00-06-595A	02
06	LA	ASCENSION PARISH	2200130040B	04-APR-2000	00-06-597A	02
06	LA	ASCENSION PARISH	2200130130D	24-MAY-2000	00-06-603A	02
06	LA	ASCENSION PARISH	2200130030C	24-FEB-2000	00-06-610A	02
06	LA	ASCENSION PARISH	2200130040B	02-MAY-2000	00-06-621A	02
06	LA	ASCENSION PARISH	2200130110D	13-MAR-2000	00-06-721A	02
06	LA	ASCENSION PARISH	2200130030C	18-APR-2000	00-06-812A	02

Region	State	Community	Map panel	Determination date	Case No.	Type
06	LA	ASCENSION PARISH	2200130030C	16-MAY-2000	00-06-871A	02
06	LA	ASCENSION PARISH	2200130130D	16-JUN-2000	00-06-983A	02
06	LA	AVOYELLES PARISH	2200190075B	10-FEB-2000	00-06-470A	02
06	LA	AVOYELLES PARISH	2200190075B	28-FEB-2000	00-06-538A	02
06	LA	AVOYELLES PARISH	2200190075B	29-MAR-2000	00-06-778A	02
06	LA	AVOYELLES PARISH	2200190075B	29-MAR-2000	00-06-780A	02
06	LA	AVOYELLES PARISH	2200190100B	12-APR-2000	00-06-860A	02
06	LA	BOSSIER CITY, CITY OF	2200330030C	30-JUN-2000	00-06-1046A	02
06	LA	BOSSIER CITY, CITY OF	2200330030C	27-JUN-2000	00-06-1088A	02
06	LA	BOSSIER CITY, CITY OF	2200330015C	10-MAR-2000	00-06-340A	01
06	LA	BOSSIER CITY, CITY OF	2200330030C	07-JAN-2000	00-06-355A	02
06	LA	BOSSIER CITY, CITY OF	2200330005C	24-FEB-2000	00-06-570A	02
06	LA	BOSSIER CITY, CITY OF	2200330030C	24-MAR-2000	00-06-764A	02
06	LA	BOSSIER CITY, CITY OF	2200330030C	31-MAR-2000	00-06-807A	02
06	LA	BOSSIER PARISH	2200310315B	21-JUN-2000	00-06-1004A	02
06	LA	BOSSIER PARISH	2200310315B	08-FEB-2000	00-06-419A	02
06	LA	BOSSIER PARISH	2200310285B	08-FEB-2000	00-06-421A	02
06	LA	BOSSIER PARISH	2200310315B	24-FEB-2000	00-06-569A	02
06	LA	BOSSIER PARISH	2200310285B	12-JUN-2000	00-06-910A	02
06	LA	BOSSIER PARISH	2200310305B	12-JUN-2000	00-06-910A	02
06	LA	CADDO PARISH	22017C0190F	07-APR-2000	00-06-968V	19
06	LA	CADDO PARISH	22017C0225F	07-APR-2000	00-06-968V	19
06	LA	CADDO PARISH	22017C0250F	07-APR-2000	00-06-968V	19
06	LA	CADDO PARISH	22017C0255F	07-APR-2000	00-06-968V	19
06	LA	CADDO PARISH	22017C0341F	07-APR-2000	00-06-968V	19
06	LA	CADDO PARISH	22017C0343F	07-APR-2000	00-06-968V	19
06	LA	CADDO PARISH	22017C0344F	07-APR-2000	00-06-968V	19
06	LA	CADDO PARISH	22017C0350F	07-APR-2000	00-06-968V	19
06	LA	CADDO PARISH	22017C0360F	07-APR-2000	00-06-968V	19
06	LA	CADDO PARISH	22017C0364F	07-APR-2000	00-06-968V	19
06	LA	CADDO PARISH	22017C0486F	07-APR-2000	00-06-968V	19
06	LA	CADDO PARISH	22017C0487F	07-APR-2000	00-06-968V	19
06	LA	CADDO PARISH	22017C0489F	07-APR-2000	00-06-968V	19
06	LA	CADDO PARISH	22017C0555F	07-APR-2000	00-06-968V	19
06	LA	CADDO PARISH	22017C0580F	07-APR-2000	00-06-968V	19
06	LA	CADDO PARISH	22017C0585F	07-APR-2000	00-06-968V	19
06	LA	CADDO PARISH	22017C0590F	07-APR-2000	00-06-968V	19
06	LA	CADDO PARISH	22017C0605F	07-APR-2000	00-06-968V	19
06	LA	CADDO PARISH	22017C1275F	07-APR-2000	00-06-968V	19
06	LA	CALCASIEU PARISH	2200370375C	28-JUN-2000	00-06-1184A	02
06	LA	CALCASIEU PARISH	2200370250D	09-FEB-2000	00-06-449A	02
06	LA	CALCASIEU PARISH	2200370250D	24-MAR-2000	00-06-761A	02
06	LA	CROWLEY, CITY OF	2251950001C	11-JAN-2000	00-06-274A	02
06	LA	EAST BATON ROUGE PARISH	2200580110D	28-JUN-2000	00-06-1050A	02
06	LA	EAST BATON ROUGE PARISH	2200580100D	11-MAY-2000	00-06-1143A	02
06	LA	EAST BATON ROUGE PARISH	2200580100D	12-JAN-2000	00-06-232A	01
06	LA	EAST BATON ROUGE PARISH	2200580095D	28-FEB-2000	00-06-565A	02
06	LA	EAST BATON ROUGE PARISH	2200580100D	03-APR-2000	00-06-649A	01
06	LA	EAST BATON ROUGE PARISH	2200580115D	16-JUN-2000	00-06-736A	02
06	LA	EAST BATON ROUGE PARISH	2200580110D	07-APR-2000	00-06-837A	02
06	LA	EAST BATON ROUGE PARISH	2200580110D	08-JUN-2000	00-06-897A	02
06	LA	EAST BATON ROUGE PARISH	2200580110D	06-JUN-2000	00-06-932A	02
06	LA	EAST BATON ROUGE PARISH	2200580115D	11-JAN-2000	99-06-1900A	01
06	LA	FRANKLIN, CITY OF	2201950005C	17-APR-2000	00-06-680A	01
06	LA	GRANT PARISH	2200760085C	24-FEB-2000	00-06-571A	02
06	LA	GREENWOOD, TOWN OF	22017C0440F	07-APR-2000	00-06-968V	19
06	LA	HAMMOND, CITY OF	2202080003C	24-FEB-2000	00-06-548A	02
06	LA	IBERIA PARISH	2200780150C	03-MAY-2000	00-06-438A	02
06	LA	JEFFERSON PARISH	22051C0135E	06-JAN-2000	00-06-094A	02
06	LA	LAFAYETTE PARISH	22055C0065G	28-FEB-2000	00-06-428A	01
06	LA	LAFAYETTE PARISH	22055C0065G	28-FEB-2000	00-06-501A	01
06	LA	LAFAYETTE PARISH	22055C0065G	29-FEB-2000	00-06-580A	02
06	LA	LAFAYETTE PARISH	22055C0070G	16-MAY-2000	00-06-690A	02
06	LA	LAFAYETTE PARISH	22055C0010G	09-MAR-2000	00-06-694P	05
06	LA	LAFAYETTE PARISH	22055C0070G	30-JUN-2000	00-06-916A	01
06	LA	LAFAYETTE, CITY OF	22055C0045G	05-JAN-2000	00-06-329A	02
06	LA	LAFAYETTE, CITY OF	22055C0045G	05-JAN-2000	00-06-379A	02
06	LA	LAFAYETTE, CITY OF	22055C0045G	28-FEB-2000	00-06-542A	02
06	LA	LAFAYETTE, CITY OF	22055C0045G	01-MAR-2000	00-06-611A	02
06	LA	LAFAYETTE, CITY OF	22055C0065G	08-MAR-2000	00-06-666A	02
06	LA	LAFAYETTE, CITY OF	22055C0065G	21-JUN-2000	00-06-743A	02
06	LA	LAFAYETTE, CITY OF	22055C0045G	24-MAR-2000	00-06-758A	02
06	LA	LAFAYETTE, CITY OF	22055C0045G	07-APR-2000	00-06-836A	02

Region	State	Community	Map panel	Determination date	Case No.	Type
06	LA	LAFAYETTE, CITY OF	22055C0045G	08-MAY-2000	00-06-840A	02
06	LA	LAFAYETTE, CITY OF	22055C0045C	23-MAY-2000	00-06-874A	01
06	LA	LAKE CHARLES, CITY OF	2200400010E	10-FEB-2000	00-06-543A	02
06	LA	LIVINGSTON PARISH	2201130025B	05-JAN-2000	00-06-311A	01
06	LA	LIVINGSTON PARISH	2201130050B	27-JAN-2000	00-06-396A	02
06	LA	LIVINGSTON PARISH	2201130125B	15-MAR-2000	00-06-440A	02
06	LA	LIVINGSTON PARISH	2201130100B	14-JUN-2000	00-06-458A	02
06	LA	LIVINGSTON PARISH	2201130100B	09-FEB-2000	00-06-460A	02
06	LA	LIVINGSTON PARISH	2201130100B	07-APR-2000	00-06-463A	02
06	LA	LIVINGSTON PARISH	2201130100B	08-MAR-2000	00-06-483A	01
06	LA	LIVINGSTON PARISH	2201130100B	14-FEB-2000	00-06-485A	02
06	LA	LIVINGSTON PARISH	2201130025B	18-FEB-2000	00-06-527A	02
06	LA	LIVINGSTON PARISH	2201130025B	17-MAR-2000	00-06-555A	02
06	LA	LIVINGSTON PARISH	2201130025B	07-MAR-2000	00-06-659A	02
06	LA	LIVINGSTON PARISH	2201130125B	18-APR-2000	00-06-794A	02
06	LA	LIVINGSTON PARISH	2201130025B	09-MAY-2000	00-06-857A	01
06	LA	MINDEN, CITY OF	2202370005D	02-FEB-2000	00-06-371A	01
06	LA	MOORINGSPORT, TOWN OF	22017C0255F	07-APR-2000	00-06-968V	19
06	LA	NATCHITOCHES PARISH	2201290255C	05-JAN-2000	00-06-333A	02
06	LA	OIL CITY, TOWN OF	22017C0255F	07-APR-2000	00-06-968V	19
06	LA	PINEVILLE, CITY OF	2201510005B	28-APR-2000	00-06-602A	02
06	LA	RAPIDES PARISH	2201450125B	09-FEB-2000	00-06-448A	02
06	LA	RAPIDES PARISH	2201450350D	31-MAY-2000	00-06-572A	17
06	LA	RAPIDES PARISH	2201450125B	24-FEB-2000	00-06-573A	02
06	LA	RAPIDES PARISH	2201450130C	28-APR-2000	00-06-839A	01
06	LA	RAPIDES PARISH	2201450130C	21-JUN-2000	00-06-976A	02
06	LA	SABINE PARISH	22085C0205C	27-JAN-2000	00-06-513A	01
06	LA	SCOTT, CITY OF	22055C0040H	11-JAN-2000	00-06-369A	02
06	LA	SCOTT, CITY OF	22055C0040H	02-MAY-2000	00-06-622A	02
06	LA	SHREVEPORT, CITY OF	2200360028E	23-FEB-2000	00-06-159A	02
06	LA	SHREVEPORT, CITY OF	2200360029E	27-JAN-2000	00-06-161A	02
06	LA	SHREVEPORT, CITY OF	2200360030E	28-FEB-2000	00-06-558A	02
06	LA	SHREVEPORT, CITY OF	2200360033E	23-FEB-2000	00-06-566A	02
06	LA	SHREVEPORT, CITY OF	2200360028E	02-MAR-2000	00-06-623A	02
06	LA	SHREVEPORT, CITY OF	22017C0487F	30-JUN-2000	00-06-822A	02
06	LA	SHREVEPORT, CITY OF	22017C0478F	19-MAY-2000	00-06-909A	02
06	LA	SHREVEPORT, CITY OF	22017C0341F	07-APR-2000	00-06-968V	19
06	LA	SHREVEPORT, CITY OF	22017C0364F	07-APR-2000	00-06-968V	19
06	LA	SHREVEPORT, CITY OF	22017C0451F	07-APR-2000	00-06-968V	19
06	LA	SHREVEPORT, CITY OF	22017C0452F	07-APR-2000	00-06-968V	19
06	LA	SHREVEPORT, CITY OF	22017C0456F	07-APR-2000	00-06-968V	19
06	LA	SHREVEPORT, CITY OF	22017C0458F	07-APR-2000	00-06-968V	19
06	LA	SHREVEPORT, CITY OF	22017C0459F	07-APR-2000	00-06-968V	19
06	LA	SHREVEPORT, CITY OF	22017C0463F	07-APR-2000	00-06-968V	19
06	LA	SHREVEPORT, CITY OF	22017C0464F	07-APR-2000	00-06-968V	19
06	LA	SHREVEPORT, CITY OF	22017C0466F	07-APR-2000	00-06-968V	19
06	LA	SHREVEPORT, CITY OF	22017C0468F	07-APR-2000	00-06-968V	19
06	LA	SHREVEPORT, CITY OF	22017C0469F	07-APR-2000	00-06-968V	19
06	LA	SHREVEPORT, CITY OF	22017C0476F	07-APR-2000	00-06-968V	19
06	LA	SHREVEPORT, CITY OF	22017C0477F	07-APR-2000	00-06-968V	19
06	LA	SHREVEPORT, CITY OF	22017C0478F	07-APR-2000	00-06-968V	19
06	LA	SHREVEPORT, CITY OF	22017C0479F	07-APR-2000	00-06-968V	19
06	LA	SHREVEPORT, CITY OF	22017C0486F	07-APR-2000	00-06-968V	19
06	LA	SHREVEPORT, CITY OF	22017C0487F	07-APR-2000	00-06-968V	19
06	LA	SHREVEPORT, CITY OF	22017C0488F	07-APR-2000	00-06-968V	19
06	LA	SHREVEPORT, CITY OF	22017C0489F	07-APR-2000	00-06-968V	19
06	LA	ST. CHARLES PARISH	2201600150C	12-JAN-2000	00-06-378A	02
06	LA	ST. CHARLES PARISH	2201600125C	07-MAR-2000	00-06-654A	02
06	LA	ST. LANDRY PARISH	2201650400C	09-MAR-2000	00-06-694P	05
06	LA	ST. TAMMANY PARISH	2252050175C	28-FEB-2000	00-06-295A	02
06	LA	ST. TAMMANY PARISH	2252050300C	14-FEB-2000	00-06-346A	02
06	LA	ST. TAMMANY PARISH	2252050150C	28-MAR-2000	00-06-705A	02
06	LA	ST. TAMMANY PARISH	2252050245C	07-FEB-2000	99-06-2073A	02
06	LA	TANGIPAHOA PARISH	2202060175D	18-FEB-2000	00-06-429A	02
06	LA	UNION PARISH	2203590250C	23-JUN-2000	00-06-1259A	02
06	NM	ALBUQUERQUE, CITY OF	35001C0328D	24-JAN-2000	00-06-089P	06
06	NM	ALBUQUERQUE, CITY OF	35001C0141D	16-JUN-2000	00-06-1048A	02
06	NM	ALBUQUERQUE, CITY OF	35001C0332D	13-JAN-2000	00-06-210A	01
06	NM	ALBUQUERQUE, CITY OF	35001C0327D	13-JAN-2000	00-06-219A	01
06	NM	ALBUQUERQUE, CITY OF	35001C0332D	21-MAR-2000	00-06-296P	05
06	NM	ALBUQUERQUE, CITY OF	35001C0337D	18-JAN-2000	00-06-380A	02
06	NM	ALBUQUERQUE, CITY OF	35001C0138D	29-FEB-2000	00-06-609P	05
06	NM	ALBUQUERQUE, CITY OF	35001C0354D	12-APR-2000	00-06-747A	01

Region	State	Community	Map panel	Determination date	Case No.	Type
06	NM	BERNALILLO COUNTY	35001C0343D	06-JUN-2000	00-06-324A	02
06	NM	BERNALILLO COUNTY	35001C0142D	08-FEB-2000	00-06-516A	02
06	NM	BERNALILLO COUNTY	35001C0339D	29-FEB-2000	00-06-598A	02
06	NM	BERNALILLO COUNTY	35001C0161D	31-MAR-2000	00-06-614P	05
06	NM	BERNALILLO COUNTY	35001C0338D	03-MAY-2000	00-06-827A	02
06	NM	BERNALILLO COUNTY	35001C0142D	19-JAN-2000	99-06-513P	05
06	NM	BERNALILLO COUNTY	35001C0161D	19-JAN-2000	99-06-513P	05
06	NM	BOSQUE FARMS, CITY OF	3501420002B	10-FEB-2000	00-06-650V	19
06	NM	CLOVIS, CITY OF	3500100037C	28-JUN-2000	00-06-923A	02
06	NM	CLOVIS, CITY OF	3500100036C	21-JUN-2000	00-06-948A	02
06	NM	GRANT COUNTY	3501210022B	24-APR-2000	00-06-815A	02
06	NM	LAS CRUCES, CITY OF	35013C0631E	28-JUN-2000	00-06-1028A	01
06	NM	LAS CRUCES, CITY OF	35013C0518F	21-MAR-2000	99-06-2033A	01
06	NM	SAN JUAN COUNTY	3500640150B	13-JAN-2000	00-06-314A	02
06	NM	SANTA FE COUNTY	3500690175B	10-MAR-2000	00-06-556A	02
06	NM	SANTA FE, CITY OF	3500700008B	22-FEB-2000	00-06-534A	02
06	NM	VALENCIA COUNTY	3500860185D	10-FEB-2000	00-06-650V	19
06	OK	ARDMORE,CITY OF	4000310005B	28-JAN-2000	00-06-459A	02
06	OK	BARTLESVILLE, CITY OF	4002200012C	21-JUN-2000	00-06-880A	02
06	OK	BROKEN ARROW, CITY OF	40143C0544H	09-FEB-2000	00-06-444A	02
06	OK	BROKEN ARROW, CITY OF	40143C0540H	03-MAR-2000	00-06-474A	02
06	OK	BROKEN ARROW, CITY OF	40143C0540H	16-FEB-2000	00-06-509A	02
06	OK	BROKEN ARROW, CITY OF	40143C0541H	30-JUN-2000	00-06-946A	02
06	OK	CANADIAN COUNTY	40017C0325D	20-JAN-2000	99-06-2091V	19
06	OK	CANADIAN COUNTY	40017C0400D	20-JAN-2000	99-06-2091V	19
06	OK	CLAREMORE, CITY OF	4053750005F	09-MAY-2000	00-06-782A	02
06	OK	CLAREMORE, CITY OF	4053750005F	15-MAY-2000	00-06-901A	02
06	OK	CLAREMORE, CITY OF	4053750005F	07-JUN-2000	00-06-963A	02
06	OK	COMANCHE COUNTY	40031C0231C	18-JAN-2000	00-06-221A	02
06	OK	COMANCHE COUNTY	40031C0225C	16-FEB-2000	00-06-482A	02
06	OK	COWETA, CITY OF	4002160001A	05-JAN-2000	00-06-200A	01
06	OK	COWETA, CITY OF	4002160001A	10-MAR-2000	99-06-1770P	05
06	OK	COWETA, CITY OF	4002160001A	27-JAN-2000	99-06-2024A	02
06	OK	CUSHING, CITY OF	4001650002B	08-FEB-2000	00-06-323A	02
06	OK	DEL CITY, CITY OF	4002330002D	18-APR-2000	00-06-640A	02
06	OK	DEL CITY, CITY OF	4002330003D	29-MAR-2000	00-06-774A	02
06	OK	DELAWARE COUNTY	4005020075C	03-MAR-2000	00-06-427A	02
06	OK	DELAWARE COUNTY	4005020025C	19-MAY-2000	00-06-869A	02
06	OK	DELAWARE COUNTY	4005020025C	28-JUN-2000	00-06-883A	02
06	OK	DELAWARE COUNTY	4005020025C	19-MAY-2000	00-06-890A	02
06	OK	DEWEY, CITY OF	4002210005C	11-MAY-2000	00-06-596A	02
06	OK	DUNCAN, CITY OF	40137C0085D	27-MAR-2000	00-06-772A	17
06	OK	EL RENO, CITY OF	40017C0290D	20-JAN-2000	99-06-2091V	19
06	OK	EL RENO, CITY OF	40017C0430D	20-JAN-2000	99-06-2091V	19
06	OK	ENID, CITY OF	40047C0115C	07-JAN-2000	00-06-353A	17
06	OK	ENID, CITY OF	40047C0115C	18-JAN-2000	00-06-383A	02
06	OK	ENID, CITY OF	40047C0115C	08-FEB-2000	00-06-424A	02
06	OK	ENID, CITY OF	40047C0095D	22-MAR-2000	00-06-486A	02
06	OK	ENID, CITY OF	40047C0115C	12-APR-2000	00-06-829A	02
06	OK	HENRYETTA, CITY OF	4001440003C	18-FEB-2000	00-06-342A	02
06	OK	INOLA, TOWN OF	4004560005B	14-JUN-2000	00-06-720A	02
06	OK	JENKS, CITY OF	40143C0494H	28-JUN-2000	00-06-1326A	17
06	OK	JENKS, CITY OF	40143C0513H	12-APR-2000	00-06-803A	02
06	OK	LAWTON, CITY OF	40031C0252C	28-FEB-2000	00-06-577A	01
06	OK	LAWTON, CITY OF	40031C0254C	28-FEB-2000	00-06-577A	01
06	OK	LAWTON, CITY OF	40031C0252C	12-APR-2000	00-06-838A	02
06	OK	LAWTON, CITY OF	40031C0252C	16-MAY-2000	00-06-919A	02
06	OK	MARSHALL COUNTY	4005110020B	30-JUN-2000	00-06-1051A	02
06	OK	MARSHALL COUNTY	4005110025B	30-JUN-2000	00-06-1051A	02
06	OK	MCLOUD, TOWN OF	40125C0015D	14-MAR-2000	00-06-724A	02
06	OK	MIDWEST CITY, CITY OF	4004050010E	18-APR-2000	00-06-641A	02
06	OK	MOORE, CITY OF	40027C0037F	28-JUN-2000	00-06-1098A	02
06	OK	MOORE, CITY OF	40027C0037F	16-FEB-2000	00-06-443A	02
06	OK	MOORE, CITY OF	40027C0029F	16-FEB-2000	00-06-445A	02
06	OK	MOORE, CITY OF	40027C0041F	26-JUN-2000	00-06-528A	02
06	OK	MUSKOGEE, CITY OF	40101C0136D	12-APR-2000	00-06-567A	02
06	OK	MUSTANG, CITY OF	40017C0470D	30-JUN-2000	00-06-1278A	02
06	OK	MUSTANG, CITY OF	4004090005A	02-MAR-2000	00-06-626A	02
06	OK	MUSTANG, CITY OF	40017C0470D	20-JAN-2000	99-06-2091V	19
06	OK	MUSTANG, CITY OF	40017C0490D	20-JAN-2000	99-06-2091V	19
06	OK	MUSTANG, CITY OF	40017C0495D	20-JAN-2000	99-06-2091V	19
06	OK	NEWCASTLE, TOWN OF	4001030006E	24-MAR-2000	99-06-2087V	19
06	OK	NEWCASTLE, TOWN OF	4001030007F	24-MAR-2000	99-06-2087V	19

Region	State	Community	Map panel	Determination date	Case No.	Type
06	OK	NORMAN,CITY OF	40027C0090F	03-MAR-2000	00-06-631A	02
06	OK	NORMAN,CITY OF	40027C0115F	04-APR-2000	00-06-704A	02
06	OK	OKLAHOMA CITY, CITY OF	4053780160D	28-JUN-2000	00-06-1159A	02
06	OK	OKLAHOMA CITY, CITY OF	4053780190F	24-JAN-2000	00-06-298P	06
06	OK	OKLAHOMA CITY, CITY OF	4053780190F	13-JAN-2000	00-06-377A	02
06	OK	OKLAHOMA CITY, CITY OF	4053780195C	28-JAN-2000	00-06-401A	02
06	OK	OKLAHOMA CITY, CITY OF	4053780160D	08-FEB-2000	00-06-425A	02
06	OK	OKLAHOMA CITY, CITY OF	4053780265D	16-FEB-2000	00-06-442A	02
06	OK	OKLAHOMA CITY, CITY OF	4053780095C	12-MAY-2000	00-06-453P	05
06	OK	OKLAHOMA CITY, CITY OF	4053780195C	10-FEB-2000	00-06-473A	02
06	OK	OKLAHOMA CITY, CITY OF	4053780235C	22-FEB-2000	00-06-517A	02
06	OK	OKLAHOMA CITY, CITY OF	4053780175F	08-FEB-2000	00-06-520A	02
06	OK	OKLAHOMA CITY, CITY OF	4053780195C	08-FEB-2000	00-06-600A	02
06	OK	OKLAHOMA CITY, CITY OF	4053780160D	16-MAY-2000	00-06-637A	02
06	OK	OKLAHOMA CITY, CITY OF	4053780200D	18-APR-2000	00-06-639A	02
06	OK	OKLAHOMA CITY, CITY OF	4053780160D	03-MAR-2000	00-06-647A	02
06	OK	OKLAHOMA CITY, CITY OF	4053780205D	08-MAR-2000	00-06-668A	02
06	OK	OKLAHOMA CITY, CITY OF	4053780170F	30-JUN-2000	00-06-728A	02
06	OK	OKLAHOMA CITY, CITY OF	4053780265D	29-MAR-2000	00-06-775A	02
06	OK	OKLAHOMA CITY, CITY OF	4053780195C	29-MAR-2000	00-06-777A	02
06	OK	OKLAHOMA CITY, CITY OF	4053780195C	18-APR-2000	00-06-779A	02
06	OK	OKLAHOMA CITY, CITY OF	4053780110C	03-MAY-2000	00-06-792A	02
06	OK	OKLAHOMA CITY, CITY OF	4053780160D	07-JUN-2000	00-06-929A	02
06	OK	OKLAHOMA CITY, CITY OF	4053780080C	07-JUN-2000	00-06-931A	02
06	OK	OKLAHOMA CITY, CITY OF	4053780150C	30-JUN-2000	00-06-954A	02
06	OK	OKMULGEE COUNTY	4004920120B	28-FEB-2000	00-06-360A	02
06	OK	OTTAWA COUNTY	4001540150B	03-MAR-2000	00-06-349A	02
06	OK	OTTAWA COUNTY	4001540150B	25-APR-2000	00-06-766A	02
06	OK	OWASSO, CITY OF	40143C0238H	25-APR-2000	00-06-886A	02
06	OK	PIEDMONT, CITY OF	40017C0170D	20-JAN-2000	99-06-2091V	19
06	OK	PIEDMONT, CITY OF	40017C0185D	20-JAN-2000	99-06-2091V	19
06	OK	PIEDMONT, CITY OF	40017C0190D	20-JAN-2000	99-06-2091V	19
06	OK	PRYOR CREEK,CITY OF	4001170002C	23-MAY-2000	00-06-902A	02
06	OK	ROGERS COUNTY	4053790100B	02-MAR-2000	00-06-253A	02
06	OK	ROGERS COUNTY	4053790025B	06-JAN-2000	00-06-345A	02
06	OK	ROGERS COUNTY	4053790110C	20-APR-2000	00-06-387A	02
06	OK	ROGERS COUNTY	4053790120B	14-FEB-2000	00-06-484A	02
06	OK	ROGERS COUNTY	4053790130C	25-MAY-2000	00-06-982A	02
06	OK	SEMINOLE, CITY OF	40133C0068C	27-JAN-2000	00-06-328A	02
06	OK	SHAWNEE, CITY OF	40125C0102D	21-JUN-2000	00-06-957A	01
06	OK	STILLWATER, CITY OF	4053800005D	21-MAR-2000	00-06-226A	02
06	OK	STILLWATER, CITY OF	4053800003D	01-MAR-2000	00-06-613A	02
06	OK	STILLWATER, CITY OF	4053800005D	03-MAY-2000	00-06-653A	02
06	OK	THE VILLAGE, CITY OF	4004200005A	03-MAR-2000	00-06-363A	02
06	OK	TULSA COUNTY	40143C0605H	16-FEB-2000	00-06-507A	02
06	OK	TULSA COUNTY	40143C0510H	09-MAY-2000	00-06-833A	02
06	OK	TULSA COUNTY	40143C0494H	10-APR-2000	00-06-835A	02
06	OK	TULSA, CITY OF	40143C0530H	14-JUN-2000	00-06-1035A	02
06	OK	TULSA, CITY OF	40143C0540H	21-JUN-2000	00-06-1106A	02
06	OK	TULSA, CITY OF	40143C0530H	23-JUN-2000	00-06-1135A	02
06	OK	TULSA, CITY OF	40143C0510H	05-JAN-2000	00-06-362A	02
06	OK	TULSA, CITY OF	40143C0530H	10-FEB-2000	00-06-488A	02
06	OK	TULSA, CITY OF	40143C0520H	07-APR-2000	00-06-599A	02
06	OK	TULSA, CITY OF	40143C0510H	03-MAR-2000	00-06-645A	02
06	OK	TULSA, CITY OF	40143C0512H	13-MAR-2000	00-06-677A	02
06	OK	TULSA, CITY OF	40143C0520H	04-APR-2000	00-06-709A	02
06	OK	TULSA, CITY OF	40143C0505H	21-MAR-2000	00-06-738A	02
06	OK	TULSA, CITY OF	40143C0530H	21-JUN-2000	00-06-756A	02
06	OK	TULSA, CITY OF	40143C0512H	21-JUN-2000	00-06-763A	02
06	OK	TULSA, CITY OF	40143C0540H	29-MAR-2000	00-06-781A	02
06	OK	TULSA, CITY OF	40143C0530H	12-APR-2000	00-06-847A	02
06	OK	TULSA, CITY OF	40143C0510H	12-APR-2000	00-06-865A	02
06	OK	TULSA, CITY OF	40143C0530H	08-JUN-2000	00-06-985A	02
06	OK	TULSA, CITY OF	40143C0530H	21-JUN-2000	00-06-992A	02
06	OK	TULSA, CITY OF	40143C0505H	31-MAY-2000	99-06-1338P	05
06	OK	TULSA, CITY OF	40143C0510H	31-MAY-2000	99-06-1338P	05
06	OK	UNION CITY, TOWN OF	40017C0440D	20-JAN-2000	99-06-2091V	19
06	OK	UNION CITY, TOWN OF	40017C0550D	20-JAN-2000	99-06-2091V	19
06	OK	WAGONER COUNTY	4002150014B	05-JUN-2000	00-06-412P	06
06	OK	WAGONER COUNTY	4002150037B	18-APR-2000	00-06-809A	02
06	OK	WARR ACRES, CITY OF	4004490001A	18-APR-2000	00-06-638A	02
06	OK	WASHINGTON COUNTY	4004590040A	13-JAN-2000	00-06-375A	02
06	OK	YUKON, CITY OF	40017C0320D	20-JAN-2000	99-06-2091V	19

Region	State	Community	Map panel	Determination date	Case No.	Type
06	OK	YUKON, CITY OF	40017C0340D	20-JAN-2000	99-06-2091V	19
06	OK	YUKON, CITY OF	40017C0480D	20-JAN-2000	99-06-2091V	19
06	TX	ABILENE, CITY OF	4854500035D	05-JAN-2000	00-06-372A	02
06	TX	ALTON, CITY OF	4803340300C	02-JUN-2000	00-06-575A	02
06	TX	ALTON, CITY OF	4815710005A	02-JUN-2000	00-06-575A	02
06	TX	AMARILLO, CITY OF	4805290025A	14-JUN-2000	00-06-1199A	02
06	TX	ARLINGTON, CITY OF	48439C0319H	12-MAY-2000	00-06-1025A	02
06	TX	ARLINGTON, CITY OF	48439C0444H	19-MAY-2000	00-06-884A	01
06	TX	ARLINGTON, CITY OF	48439C0441H	30-MAY-2000	00-06-935A	02
06	TX	ARLINGTON, CITY OF	48439C0456H	08-MAY-2000	00-06-980A	02
06	TX	ARLINGTON, CITY OF	48439C0454H	26-JAN-2000	99-06-1062P	05
06	TX	ARLINGTON, CITY OF	48439C0444H	31-MAR-2000	99-06-2048P	05
06	TX	AUSTIN, CITY OF	48453C0210F	06-JUN-2000	00-06-1158A	02
06	TX	AUSTIN, CITY OF	48453C0160E	21-JUN-2000	00-06-1295A	02
06	TX	AUSTIN, CITY OF	48453C0245E	01-MAR-2000	00-06-400A	02
06	TX	AUSTIN, CITY OF	48453C0160E	30-MAR-2000	00-06-784A	02
06	TX	AUSTIN, CITY OF	48453C0160E	03-APR-2000	00-06-808A	02
06	TX	AUSTIN, CITY OF	48453C0170G	28-JAN-2000	97-06-938V	19
06	TX	AUSTIN, CITY OF	48453C0175F	28-JAN-2000	97-06-938V	19
06	TX	AUSTIN, CITY OF	48453C0215G	28-JAN-2000	97-06-938V	19
06	TX	AUSTIN, CITY OF	48453C0260F	28-JAN-2000	97-06-938V	19
06	TX	AUSTIN, CITY OF	48491C0325D	01-MAR-2000	99-06-1272P	05
06	TX	BANDERA COUNTY	4800200265A	24-FEB-2000	00-06-576A	02
06	TX	BEDFORD, CITY OF	48439C0330H	24-JAN-2000	99-06-1986P	05
06	TX	BELL COUNTY	4807060280B	28-MAR-2000	00-06-023A	01
06	TX	BELL COUNTY	4807060280B	14-JUN-2000	00-06-1201A	02
06	TX	BELL COUNTY	4807060145B	18-APR-2000	00-06-190A	02
06	TX	BELL COUNTY	4807060145B	18-APR-2000	00-06-476A	02
06	TX	BELLAIRE, CITY OF	48201C0855K	21-APR-2000	00-06-1072V	19
06	TX	BELLVILLE, CITY OF	48015C0150C	10-MAY-2000	00-06-1011A	02
06	TX	BEXAR COUNTY	48029C0257E	24-MAY-2000	00-06-1129A	02
06	TX	BEXAR COUNTY	48029C0240E	28-JUN-2000	00-06-1287A	02
06	TX	BEXAR COUNTY	48029C0395E	11-FEB-2000	00-06-413P	05
06	TX	BEXAR COUNTY	48029C0415E	11-FEB-2000	00-06-413P	05
06	TX	BEXAR COUNTY	48029C0416E	30-JUN-2000	00-06-511A	02
06	TX	BEXAR COUNTY	48029C0130E	30-MAR-2000	00-06-533A	01
06	TX	BEXAR COUNTY	48029C0477E	07-JAN-2000	99-06-1409P	05
06	TX	BEXAR COUNTY	48029C0479E	07-JAN-2000	99-06-1409P	05
06	TX	BEXAR COUNTY	48029C0140E	18-FEB-2000	99-06-1783P	06
06	TX	BEXAR COUNTY	48029C0470E	08-FEB-2000	99-06-1911P	06
06	TX	BRAZORIA COUNTY	48039C0030I	08-MAY-2000	00-06-1004A	02
06	TX	BRAZORIA COUNTY	48039C0030I	21-JUN-2000	00-06-1102A	02
06	TX	BRAZORIA COUNTY	48039C0030I	21-JUN-2000	00-06-1153A	02
06	TX	BRAZORIA COUNTY	48039C0030I	28-APR-2000	00-06-961A	02
06	TX	BRAZORIA COUNTY	48039C0030I	08-MAY-2000	00-06-981A	02
06	TX	BRAZOS COUNTY	48041C0125C	30-MAY-2000	00-06-472A	02
06	TX	BRAZOS COUNTY	48041C0163D	10-FEB-2000	00-06-651V	19
06	TX	BROWNSVILLE, CITY OF	4801010350B	28-MAR-2000	00-06-706A	01
06	TX	BROWNSVILLE, CITY OF	4801030010B	24-MAR-2000	00-06-752A	02
06	TX	CANYON, CITY OF	4805330001D	07-APR-2000	00-06-634A	02
06	TX	CARROLLTON, CITY OF	4801670005G	29-FEB-2000	00-06-592A	02
06	TX	CARROLLTON, CITY OF	4801670010E	19-MAY-2000	00-06-973A	01
06	TX	CARROLLTON, CITY OF	4801670015F	07-JAN-2000	99-06-954P	05
06	TX	CEDAR HILL, CITY OF	4801680015B	12-JAN-2000	00-06-385A	02
06	TX	CIBOLO, CITY OF	4802670001C	22-MAY-2000	00-06-1079A	02
06	TX	CLEBURNE, CITY OF	48251C0113G	08-MAY-2000	00-06-846A	02
06	TX	COLLEGE STATION, CITY OF	48041C0143C	21-MAR-2000	99-06-1624P	06
06	TX	COLLEGE STATION, CITY OF	48041C0181C	21-MAR-2000	99-06-1624P	06
06	TX	COLLEYVILLE, CITY OF	48439C0195H	10-MAR-2000	00-06-433P	06
06	TX	COLLEYVILLE, CITY OF	48439C0195H	02-JUN-2000	00-06-469A	02
06	TX	COLLIN COUNTY	48085C0325G	03-APR-2000	00-06-493P	06
06	TX	COLLIN COUNTY	48085C0175G	02-JUN-2000	00-06-816A	02
06	TX	COMAL COUNTY	4854630080C	11-MAY-2000	00-06-942A	02
06	TX	COPPELL, CITY OF	4801700010E	15-MAY-2000	00-06-889A	17
06	TX	COPPELL, CITY OF	4801700010E	08-MAY-2000	00-06-896A	02
06	TX	COPPER CANYON, TOWN OF	48121C0527E	28-MAR-2000	99-06-1381P	05
06	TX	COPPERAS COVE, CITY OF	4808990235B	21-JUN-2000	00-06-875A	01
06	TX	CORINTH, TOWN OF	48121C0393E	20-APR-2000	00-06-928A	02
06	TX	CORPUS CHRISTI, CITY OF	4854940520D	22-MAR-2000	00-06-537A	02
06	TX	CORSICANA, CITY OF	4804980005A	16-JUN-2000	00-06-1215A	02
06	TX	DALLAS, CITY OF	4801710185D	08-MAY-2000	00-06-1002A	02
06	TX	DALLAS, CITY OF	4801710185D	16-JUN-2000	00-06-1055A	02
06	TX	DALLAS, CITY OF	4801710100D	19-MAY-2000	00-06-1069A	02

Region	State	Community	Map panel	Determination date	Case No.	Type
06	TX	DALLAS, CITY OF	4801710050D	26-JUN-2000	00-06-1253A	01
06	TX	DALLAS, CITY OF	4801710085D	17-MAR-2000	00-06-376A	01
06	TX	DALLAS, CITY OF	4801710210C	22-MAR-2000	00-06-581P	05
06	TX	DALLAS, CITY OF	4801710205D	28-APR-2000	00-06-644A	02
06	TX	DALLAS, CITY OF	4801710100D	25-APR-2000	00-06-754A	02
06	TX	DALLAS, CITY OF	4801710065C	17-JAN-2000	99-06-1073P	05
06	TX	DALLAS, CITY OF	4801710100D	17-JAN-2000	99-06-1073P	05
06	TX	DALLAS, CITY OF	4801710050D	15-MAY-2000	99-06-1148P	05
06	TX	DALLAS, CITY OF	4801710055C	15-MAY-2000	99-06-1148P	05
06	TX	DALLAS, CITY OF	4801710085D	15-MAY-2000	99-06-1148P	05
06	TX	DALLAS, CITY OF	4801710090D	15-MAY-2000	99-06-1148P	05
06	TX	DALLAS, CITY OF	4801710175D	31-MAR-2000	99-06-1636P	06
06	TX	DEER PARK, CITY OF	48201C0940J	10-MAR-2000	00-06-674A	02
06	TX	DENTON COUNTY	48121C0510E	02-FEB-2000	00-06-356P	05
06	TX	DENTON COUNTY	48121C0526E	02-FEB-2000	00-06-356P	05
06	TX	DENTON COUNTY	48121C0567E	31-MAR-2000	00-06-359P	05
06	TX	DENTON COUNTY	48121C0570E	31-MAR-2000	00-06-359P	05
06	TX	DENTON COUNTY	48121C0388E	01-JUN-2000	00-06-990P	05
06	TX	DENTON, CITY OF	48121C0380E	31-MAY-2000	00-06-1126A	01
06	TX	DENTON, CITY OF	48121C0380E	21-JUN-2000	00-06-1239A	02
06	TX	DENTON, CITY OF	48121C0370E	24-MAY-2000	00-06-988A	01
06	TX	DENTON, CITY OF	48121C0388E	24-MAY-2000	00-06-988A	01
06	TX	DENTON, CITY OF	48121C0388E	01-JUN-2000	00-06-990P	05
06	TX	EDGECLIFF VILLAGE, TOWN OF	48439C0415H	15-MAR-2000	00-06-740A	02
06	TX	EDINBURG,CITY OF	4803380015E	07-JUN-2000	99-06-2098V	19
06	TX	EDINBURG,CITY OF	4803380030E	07-JUN-2000	99-06-2098V	19
06	TX	EL PASO, CITY OF	4802140048B	28-JUN-2000	00-06-1271A	01
06	TX	EL PASO, CITY OF	4802140048B	08-MAY-2000	00-06-279A	01
06	TX	EL PASO, CITY OF	4802140036B	12-JAN-2000	00-06-475A	01
06	TX	ELLIS COUNTY	48139C0085D	08-MAY-2000	00-06-322A	02
06	TX	ELLIS COUNTY	48139C0190D	12-MAY-2000	00-06-893A	02
06	TX	ELLIS COUNTY	48139C0095D	02-JUN-2000	00-06-921A	02
06	TX	EULESS, CITY OF	48439C0330H	24-JAN-2000	99-06-1986P	05
06	TX	FLOWER MOUND, TOWN OF	48121C0540E	31-MAY-2000	00-06-1124A	02
06	TX	FLOWER MOUND, TOWN OF	48121C0540E	10-MAR-2000	00-06-687A	02
06	TX	FLOWER MOUND, TOWN OF	48121C0540E	10-JAN-2000	99-06-2078P	06
06	TX	FORT BEND COUNTY	48157C0085J	24-MAY-2000	00-06-1054A	01
06	TX	FORT BEND COUNTY	48157C0085J	05-JAN-2000	00-06-341A	02
06	TX	FORT BEND COUNTY	48157C0085J	31-MAR-2000	99-06-1727P	05
06	TX	FORT BEND COUNTY	48157C0015J	31-JAN-2000	99-06-1813P	06
06	TX	FORT BEND COUNTY L.I.D. ι2	48157C0255J	30-MAY-2000	00-06-1170A	01
06	TX	FORT BEND COUNTY L.I.D. ι2	48157C0255J	28-JUN-2000	00-06-1266A	01
06	TX	FORT BEND COUNTY L.I.D. ι2	48157C0255J	05-APR-2000	00-06-788A	01
06	TX	FORT BEND COUNTY L.I.D. ι2	48157C0255J	12-MAY-2000	00-06-936A	01
06	TX	FORT BEND COUNTY M.U.D. ι34	48157C0085J	31-MAR-2000	99-06-1727P	05
06	TX	FORT BEND COUNTY M.U.D. ι35	48157C0085J	31-MAR-2000	99-06-1727P	05
06	TX	FORT WORTH, CITY OF	48439C0280H	24-JAN-2000	00-06-101P	05
06	TX	FORT WORTH, CITY OF	48439C0415H	10-JAN-2000	00-06-244A	02
06	TX	FORT WORTH, CITY OF	48439C0330H	18-FEB-2000	00-06-280A	02
06	TX	FORT WORTH, CITY OF	48439C0395H	04-APR-2000	00-06-365A	02
06	TX	FORT WORTH, CITY OF	48439C0170H	22-FEB-2000	00-06-406P	06
06	TX	FORT WORTH, CITY OF	48439C0395H	08-FEB-2000	00-06-426A	02
06	TX	FORT WORTH, CITY OF	48439C0395H	24-MAR-2000	00-06-551A	02
06	TX	FORT WORTH, CITY OF	48439C0380H	19-APR-2000	00-06-895A	02
06	TX	FORT WORTH, CITY OF	48439C0260H	24-MAR-2000	99-06-1719P	05
06	TX	FORT WORTH, CITY OF	48439C0280H	24-MAR-2000	99-06-1719P	05
06	TX	FRIENDSWOOD, CITY OF	4854680005E	22-MAY-2000	00-06-1026A	01
06	TX	FRIENDSWOOD, CITY OF	4854680005E	08-FEB-2000	00-06-392A	01
06	TX	FRIENDSWOOD, CITY OF	4854680005E	10-APR-2000	00-06-583A	02
06	TX	FRIENDSWOOD, CITY OF	4854680005E	27-MAR-2000	99-06-1752V	19
06	TX	FRISCO, CITY OF	48085C0410G	24-MAY-2000	00-06-393P	05
06	TX	FRISCO, CITY OF	48085C0405G	09-MAR-2000	99-06-1954P	05
06	TX	GARLAND, CITY OF	4854710005E	10-MAY-2000	00-06-1008A	02
06	TX	GARLAND, CITY OF	4854710020D	10-MAY-2000	00-06-1009A	02
06	TX	GARLAND, CITY OF	4854710020D	02-JUN-2000	00-06-1137A	02
06	TX	GARLAND, CITY OF	4854710020D	16-JUN-2000	00-06-1225A	02
06	TX	GARLAND, CITY OF	4854710030E	21-JUN-2000	00-06-1229A	02
06	TX	GARLAND, CITY OF	4854710020D	21-JUN-2000	00-06-1236A	02
06	TX	GARLAND, CITY OF	4854710030E	10-JAN-2000	00-06-273A	01
06	TX	GARLAND, CITY OF	4854710020D	21-APR-2000	00-06-343P	05
06	TX	GARLAND, CITY OF	4854710015D	16-FEB-2000	00-06-481A	02
06	TX	GARLAND, CITY OF	4854710030E	14-FEB-2000	00-06-646A	01
06	TX	GARLAND, CITY OF	4854710015D	20-APR-2000	00-06-814A	02

Region	State	Community	Map panel	Determination date	Case No.	Type
06	TX	GARLAND, CITY OF	4854710030E	12-APR-2000	00-06-849A	02
06	TX	GARLAND, CITY OF	4854710005E	23-FEB-2000	99-06-1057P	05
06	TX	GILLESPIE COUNTY	4806960007B	26-JUN-2000	00-06-1237A	02
06	TX	GLEN ROSE, CITY OF	48425C0040C	28-FEB-2000	00-06-418A	01
06	TX	GONZALES, CITY OF	4802540001B	05-APR-2000	00-06-539A	02
06	TX	GRANBURY, CITY OF	4803570005B	26-JUN-2000	00-06-1196A	02
06	TX	GRAPEVINE, CITY OF	48439C0215H	18-JAN-2000	00-06-272P	06
06	TX	GREENVILLE, CITY OF	48231C0180F	03-MAR-2000	00-06-635A	02
06	TX	GREENVILLE, CITY OF	48231C0180F	17-MAY-2000	00-06-757A	01
06	TX	GUADALUPE COUNTY	4802660075D	28-JAN-2000	00-06-405A	02
06	TX	GUN BARREL, CITY OF	48213C0035D	13-APR-2000	00-06-771A	02
06	TX	HALTOM CITY, CITY OF	48439C0282H	09-JUN-2000	00-06-1164A	01
06	TX	HALTOM CITY, CITY OF	48439C0285H	09-JUN-2000	00-06-1164A	01
06	TX	HALTOM CITY, CITY OF	48439C0295H	02-JUN-2000	00-06-868A	02
06	TX	HARDIN COUNTY	48199C0075C	28-APR-2000	00-06-478A	02
06	TX	HARRIS COUNTY	48201C0245K	21-APR-2000	00-06-1072V	19
06	TX	HARRIS COUNTY	48201C0305K	21-APR-2000	00-06-1072V	19
06	TX	HARRIS COUNTY	48201C0315K	21-APR-2000	00-06-1072V	19
06	TX	HARRIS COUNTY	48201C0320K	21-APR-2000	00-06-1072V	19
06	TX	HARRIS COUNTY	48201C0430K	21-APR-2000	00-06-1072V	19
06	TX	HARRIS COUNTY	48201C0435K	21-APR-2000	00-06-1072V	19
06	TX	HARRIS COUNTY	48201C0440K	21-APR-2000	00-06-1072V	19
06	TX	HARRIS COUNTY	48201C0445K	21-APR-2000	00-06-1072V	19
06	TX	HARRIS COUNTY	48201C0465K	21-APR-2000	00-06-1072V	19
06	TX	HARRIS COUNTY	48201C0810K	21-APR-2000	00-06-1072V	19
06	TX	HARRIS COUNTY	48201C0830K	21-APR-2000	00-06-1072V	19
06	TX	HARRIS COUNTY	48201C0840K	21-APR-2000	00-06-1072V	19
06	TX	HARRIS COUNTY	48201C0845K	21-APR-2000	00-06-1072V	19
06	TX	HARRIS COUNTY	48201C0865K	21-APR-2000	00-06-1072V	19
06	TX	HARRIS COUNTY	48201C1030K	21-APR-2000	00-06-1072V	19
06	TX	HARRIS COUNTY	48201C1070K	21-APR-2000	00-06-1072V	19
06	TX	HARRIS COUNTY	48201C1090K	21-APR-2000	00-06-1072V	19
06	TX	HARRIS COUNTY	48201C0810K	16-MAY-2000	00-06-1180P	06
06	TX	HARRIS COUNTY	48201C0235K	02-JUN-2000	00-06-1190V	19
06	TX	HARRIS COUNTY	48201C0735K	02-JUN-2000	00-06-1190V	19
06	TX	HARRIS COUNTY	48201C0445J	03-APR-2000	00-06-120P	05
06	TX	HARRIS COUNTY	48201C0635J	03-APR-2000	00-06-120P	05
06	TX	HARRIS COUNTY	48201C0490J	10-JAN-2000	00-06-176A	02
06	TX	HARRIS COUNTY	48201C0320J	14-FEB-2000	00-06-292A	02
06	TX	HARRIS COUNTY	48201C0215J	07-APR-2000	00-06-312A	02
06	TX	HARRIS COUNTY	48201C0305J	16-FEB-2000	00-06-352A	02
06	TX	HARRIS COUNTY	48201C0320J	21-JAN-2000	00-06-384A	02
06	TX	HARRIS COUNTY	48201C0245K	02-FEB-2000	00-06-403P	06
06	TX	HARRIS COUNTY	48201C0320J	07-APR-2000	00-06-559A	01
06	TX	HARRIS COUNTY	48201C1105J	25-APR-2000	00-06-560A	02
06	TX	HARRIS COUNTY	48201C0245J	13-MAR-2000	00-06-672P	06
06	TX	HARRIS COUNTY	48201C0430J	22-MAR-2000	00-06-735A	02
06	TX	HAYS COUNTY	48209C0160E	10-FEB-2000	00-06-466A	02
06	TX	HAYS COUNTY	48209C0160E	12-APR-2000	00-06-864A	02
06	TX	HAYS COUNTY	48209C0227E	02-MAR-2000	98-06-1489P	05
06	TX	HAYS COUNTY	48209C0229E	02-MAR-2000	98-06-1489P	05
06	TX	HAYS COUNTY	48209C0231E	02-MAR-2000	98-06-1489P	05
06	TX	HAYS COUNTY	48209C0155E	18-JAN-2000	99-06-1984A	02
06	TX	HEATH, CITY OF	4805450005A	03-MAR-2000	00-06-554A	01
06	TX	HEATH, CITY OF	4805450005A	11-MAY-2000	00-06-960A	02
06	TX	HENDERSON COUNTY	48213C0045D	24-FEB-2000	00-06-550A	02
06	TX	HENDERSON COUNTY	48213C0225C	29-FEB-2000	00-06-590A	02
06	TX	HENDERSON COUNTY	48213C0100C	15-MAR-2000	00-06-686A	02
06	TX	HIDALGO COUNTY	4803340300C	11-MAY-2000	00-06-589A	01
06	TX	HIDALGO COUNTY	4803340295D	07-JUN-2000	99-06-2097V	19
06	TX	HIDALGO COUNTY	4803340300D	07-JUN-2000	99-06-2097V	19
06	TX	HIGHLAND VILLAGE, VILLAGE OF	48121C0527E	28-MAR-2000	99-06-1381P	05
06	TX	HOLLYWOOD PARK, TOWN OF	48029C0276E	11-APR-2000	99-06-1046P	05
06	TX	HOOD COUNTY	4803560130C	03-MAR-2000	00-06-632A	02
06	TX	HOOD COUNTY	4803560145B	12-APR-2000	00-06-870A	02
06	TX	HOUSTON, CITY OF	48201C0670K	19-MAY-2000	00-06-1067A	02
06	TX	HOUSTON, CITY OF	48201C0465K	21-APR-2000	00-06-1072V	19
06	TX	HOUSTON, CITY OF	48201C0665K	21-APR-2000	00-06-1072V	19
06	TX	HOUSTON, CITY OF	48201C0670K	21-APR-2000	00-06-1072V	19
06	TX	HOUSTON, CITY OF	48201C0690K	21-APR-2000	00-06-1072V	19
06	TX	HOUSTON, CITY OF	48201C0830K	21-APR-2000	00-06-1072V	19
06	TX	HOUSTON, CITY OF	48201C0835K	21-APR-2000	00-06-1072V	19
06	TX	HOUSTON, CITY OF	48201C0840K	21-APR-2000	00-06-1072V	19

Region	State	Community	Map panel	Determination date	Case No.	Type
06	TX	HOUSTON, CITY OF	48201C0845K	21-APR-2000	00-06-1072V	19
06	TX	HOUSTON, CITY OF	48201C0855K	21-APR-2000	00-06-1072V	19
06	TX	HOUSTON, CITY OF	48201C0860K	21-APR-2000	00-06-1072V	19
06	TX	HOUSTON, CITY OF	48201C0880K	21-APR-2000	00-06-1072V	19
06	TX	HOUSTON, CITY OF	48201C0885K	21-APR-2000	00-06-1072V	19
06	TX	HOUSTON, CITY OF	48201C1005K	21-APR-2000	00-06-1072V	19
06	TX	HOUSTON, CITY OF	48201C1055K	21-APR-2000	00-06-1072V	19
06	TX	HOUSTON, CITY OF	48201C1060K	21-APR-2000	00-06-1072V	19
06	TX	HOUSTON, CITY OF	48201C0865K	05-MAY-2000	00-06-1113P	06
06	TX	HOUSTON, CITY OF	48201C0485J	31-JAN-2000	00-06-137P	05
06	TX	HOUSTON, CITY OF	48201C0880J	16-FEB-2000	00-06-240A	02
06	TX	HOUSTON, CITY OF	48201C0635K	22-MAY-2000	00-06-498A	01
06	TX	HOUSTON, CITY OF	48201C0435J	07-MAR-2000	00-06-605A	01
06	TX	IRVING, CITY OF	4801800050C	09-MAY-2000	00-06-1039A	02
06	TX	IRVING, CITY OF	4801800050C	16-MAY-2000	00-06-762A	02
06	TX	IRVING, CITY OF	4801800035C	02-FEB-2000	99-06-1912P	05
06	TX	JERSEY VILLAGE, CITY OF	48201C0440K	21-APR-2000	00-06-1071V	19
06	TX	KATY, CITY OF	48157C0015J	31-JAN-2000	99-06-1813P	05
06	TX	KERR COUNTY	4804190275B	12-MAY-2000	00-06-1031A	02
06	TX	KERR COUNTY	4804190275B	31-MAY-2000	00-06-1240A	02
06	TX	KERR COUNTY	4804190175B	09-MAY-2000	00-06-977A	02
06	TX	KILLEEN, CITY OF	4800310005C	05-MAY-2000	99-06-2095V	19
06	TX	KILLEEN, CITY OF	4800310007C	05-MAY-2000	99-06-2095V	19
06	TX	KILLEEN, CITY OF	4800310008C	05-MAY-2000	99-06-2095V	19
06	TX	LAGO VISTA, CITY OF	48453C0355E	21-JUN-2000	00-06-675A	02
06	TX	LAREDO, CITY OF	4806510005B	17-MAY-2000	00-06-1056A	02
06	TX	LAREDO, CITY OF	4806510005B	31-MAR-2000	00-06-804A	02
06	TX	LEAGUE CITY, CITY OF	4854880030E	18-JAN-2000	00-06-302A	01
06	TX	LEAGUE CITY, CITY OF	4854880030E	12-MAY-2000	00-06-950A	01
06	TX	LEWISVILLE, CITY OF	48121C0545E	02-MAY-2000	00-06-670P	05
06	TX	LEWISVILLE, CITY OF	48121C0555E	05-MAY-2000	00-06-802P	05
06	TX	LEWISVILLE, CITY OF	48121C0565E	05-MAY-2000	00-06-802P	05
06	TX	LLANO COUNTY	4812340285B	10-MAR-2000	00-06-480A	02
06	TX	LLANO COUNTY	4812340145B	12-MAY-2000	00-06-671A	02
06	TX	LUBBOCK, CITY OF	4804520045C	16-JUN-2000	00-06-1221A	02
06	TX	LUBBOCK, CITY OF	4804520025C	29-FEB-2000	00-06-587A	02
06	TX	LUBBOCK, CITY OF	4804520045C	10-MAR-2000	00-06-630A	02
06	TX	LUBBOCK, CITY OF	4804520025C	24-MAR-2000	00-06-753A	02
06	TX	MCKINNEY, CITY OF	48085C0285G	12-MAY-2000	00-06-1023A	02
06	TX	MCKINNEY, CITY OF	48085C0285G	21-MAR-2000	00-06-696A	01
06	TX	MIDLAND COUNTY	48329C0068E	07-MAR-2000	00-06-619A	01
06	TX	MIDLAND COUNTY	48329C0100E	27-MAR-2000	99-06-2094V	19
06	TX	MIDLAND COUNTY	48329C0125E	27-MAR-2000	99-06-2094V	19
06	TX	MIDLAND COUNTY	48329C0150E	27-MAR-2000	99-06-2094V	19
06	TX	MIDLAND COUNTY	48329C0226E	27-MAR-2000	99-06-2094V	19
06	TX	MIDLAND COUNTY	48329C0227E	27-MAR-2000	99-06-2094V	19
06	TX	MIDLAND, CITY OF	48329C0067E	10-MAY-2000	00-06-1007A	02
06	TX	MIDLAND, CITY OF	48329C0087E	10-MAY-2000	00-06-1012A	02
06	TX	MIDLAND, CITY OF	48329C0088E	12-MAY-2000	00-06-1036A	02
06	TX	MIDLAND, CITY OF	48329C0088E	12-MAY-2000	00-06-1038A	02
06	TX	MIDLAND, CITY OF	48329C0069E	24-MAY-2000	00-06-1099A	02
06	TX	MIDLAND, CITY OF	48329C0088E	02-JUN-2000	00-06-1134A	02
06	TX	MIDLAND, CITY OF	48329C0088E	09-JUN-2000	00-06-1173A	02
06	TX	MIDLAND, CITY OF	48329C0066E	16-JUN-2000	00-06-1204A	01
06	TX	MIDLAND, CITY OF	48329C0067E	16-FEB-2000	00-06-452A	01
06	TX	MIDLAND, CITY OF	48329C0087E	03-MAR-2000	00-06-540A	01
06	TX	MIDLAND, CITY OF	48329C0069E	28-FEB-2000	00-06-544A	02
06	TX	MIDLAND, CITY OF	48329C0088E	28-FEB-2000	00-06-547A	02
06	TX	MIDLAND, CITY OF	48329C0069E	01-MAR-2000	00-06-607A	02
06	TX	MIDLAND, CITY OF	48329C0088E	07-APR-2000	00-06-642A	02
06	TX	MIDLAND, CITY OF	48329C0088E	07-MAR-2000	00-06-658A	02
06	TX	MIDLAND, CITY OF	48329C0069E	15-MAR-2000	00-06-685A	02
06	TX	MIDLAND, CITY OF	48329C0088E	07-APR-2000	00-06-716A	02
06	TX	MIDLAND, CITY OF	48329C0088E	24-MAR-2000	00-06-760A	02
06	TX	MIDLAND, CITY OF	48329C0088E	17-APR-2000	00-06-882A	02
06	TX	MIDLAND, CITY OF	48329C0088E	18-APR-2000	00-06-887A	02
06	TX	MIDLAND, CITY OF	48329C0087E	25-APR-2000	00-06-930A	02
06	TX	MIDLAND, CITY OF	48329C0088E	28-APR-2000	00-06-943A	02
06	TX	MIDLAND, CITY OF	48329C0088E	08-MAY-2000	00-06-984A	02
06	TX	MIDLAND, CITY OF	48329C0066E	27-MAR-2000	99-06-2094V	19
06	TX	MIDLAND, CITY OF	48329C0068E	27-MAR-2000	99-06-2094V	19
06	TX	MIDLAND, CITY OF	48329C0069E	27-MAR-2000	99-06-2094V	19
06	TX	MIDLAND, CITY OF	48329C0086E	27-MAR-2000	99-06-2094V	19

Region	State	Community	Map panel	Determination date	Case No.	Type
06	TX	MIDLAND, CITY OF	48329C0087E	27-MAR-2000	99-06-2094V	19
06	TX	MIDLAND, CITY OF	48329C0088E	27-MAR-2000	99-06-2094V	19
06	TX	MIDLAND, CITY OF	48329C0089E	27-MAR-2000	99-06-2094V	19
06	TX	MIDLAND, CITY OF	48329C0100E	27-MAR-2000	99-06-2094V	19
06	TX	MIDLAND, CITY OF	48329C0125E	27-MAR-2000	99-06-2094V	19
06	TX	MISSION BEND M.U.D. ι2	48201C0810K	16-MAY-2000	00-06-1180P	06
06	TX	MISSOURI CITY, CITY OF	48157C0270J	17-APR-2000	00-06-655A	01
06	TX	MISSOURI CITY, CITY OF	48157C0255J	12-JUN-2000	00-06-742A	08
06	TX	MONTGOMERY COUNTY	48339C0510F	16-FEB-2000	00-06-113A	01
06	TX	MONTGOMERY COUNTY	48339C0539G	16-JUN-2000	00-06-1174A	02
06	TX	MONTGOMERY COUNTY	48339C0215F	21-JUN-2000	00-06-1275A	01
06	TX	MONTGOMERY COUNTY	48339C0635F	09-MAR-2000	00-06-150A	17
06	TX	MONTGOMERY COUNTY	48339C0195F	25-APR-2000	00-06-330A	01
06	TX	MONTGOMERY COUNTY	48339C0520F	27-MAR-2000	00-06-394A	01
06	TX	MONTGOMERY COUNTY	48339C0495F	02-JUN-2000	00-06-633A	02
06	TX	MONTGOMERY COUNTY	48339C0245F	15-MAR-2000	00-06-702A	02
06	TX	MONTGOMERY COUNTY	48339C0510F	21-MAR-2000	00-06-718A	01
06	TX	MONTGOMERY COUNTY	48339C0505F	28-MAR-2000	00-06-751A	01
06	TX	MONTGOMERY COUNTY	48339C0510F	28-MAR-2000	00-06-751A	01
06	TX	MONTGOMERY COUNTY	48339C0530F	25-APR-2000	00-06-933A	02
06	TX	NACOGDOCHES COUNTY	4809470004B	15-MAR-2000	00-06-714A	02
06	TX	NASSAU BAY, CITY OF	48201C1090K	21-APR-2000	00-06-1072V	19
06	TX	NEWTON COUNTY	48351C0525C	17-APR-2000	00-06-905A	02
06	TX	NORTH RICHLAND HILLS, CITY OF	48439C0302H	24-MAY-2000	00-06-107P	05
06	TX	NORTH RICHLAND HILLS, CITY OF	48439C0303H	18-JAN-2000	00-06-132A	02
06	TX	NORTH RICHLAND HILLS, CITY OF	48439C0189H	31-MAR-2000	00-06-625P	06
06	TX	NORTH RICHLAND HILLS, CITY OF	48439C0195H	31-MAR-2000	00-06-625P	06
06	TX	NORTH RICHLAND HILLS, CITY OF	48439C0301H	03-MAY-2000	00-06-805P	05
06	TX	NORTH RICHLAND HILLS, CITY OF	48439C0188H	11-JAN-2000	99-06-1957P	05
06	TX	NORTH RICHLAND HILLS, CITY OF	48439C0301H	11-JAN-2000	99-06-1957P	05
06	TX	ODESSA, CITY OF	48135C0170D	28-JUN-2000	00-06-1280A	02
06	TX	ODESSA, CITY OF	48135C0135D	01-MAR-2000	00-06-367A	01
06	TX	ODESSA, CITY OF	48135C0140D	19-APR-2000	00-06-546A	02
06	TX	ODESSA, CITY OF	48135C0170D	24-FEB-2000	00-06-568A	02
06	TX	ODESSA, CITY OF	48135C0140D	30-MAR-2000	00-06-790A	02
06	TX	ODESSA, CITY OF	48135C0175D	28-APR-2000	00-06-944A	02
06	TX	ODESSA, CITY OF	48135C0170D	24-FEB-2000	99-06-1891A	02
06	TX	PEARLAND, CITY OF	48039C0035I	18-APR-2000	00-06-888A	02
06	TX	PFLUGERVILLE, CITY OF	48453C0075E	21-JUN-2000	00-06-1291A	02
06	TX	PINEY POINT VILLAGE, CITY OF	48201C0835K	21-APR-2000	00-06-1072V	19
06	TX	PLANO, CITY OF	48085C0420G	22-MAY-2000	00-06-1078A	02
06	TX	PLANO, CITY OF	48085C0420G	09-JUN-2000	00-06-1168A	02
06	TX	PLANO, CITY OF	48085C0440G	22-FEB-2000	00-06-281A	02
06	TX	PLANO, CITY OF	48085C0445G	20-APR-2000	00-06-914A	02
06	TX	PRINCETON, CITY OF	48085C0325G	03-APR-2000	00-06-493P	06
06	TX	PRINCETON, CITY OF	48085C0350G	03-APR-2000	00-06-493P	06
06	TX	PRINCETON, CITY OF	48085C0325G	28-APR-2000	00-06-723A	02
06	TX	RICHARDSON, CITY OF	4801840010C	03-MAR-2000	00-06-432A	02
06	TX	RICHARDSON, CITY OF	4801840015C	02-FEB-2000	00-06-477A	02
06	TX	RICHMOND, CITY OF	48157C0210J	02-JUN-2000	00-06-941A	17
06	TX	ROANOKE, CITY OF	48121C0515F	14-JAN-2000	00-06-136P	06
06	TX	ROANOKE, CITY OF	48121C0655E	14-JAN-2000	00-06-136P	06
06	TX	ROBSTOWN, CITY OF	4855030005D	25-APR-2000	00-06-926A	02
06	TX	ROCKWALL, CITY OF	4805470005C	12-MAY-2000	00-06-1041A	02
06	TX	ROCKWALL, CITY OF	4805470005C	15-MAR-2000	00-06-417A	01
06	TX	ROCKWALL, CITY OF	4805470005C	17-APR-2000	00-06-750A	02
06	TX	ROCKWALL, CITY OF	4805470005C	04-APR-2000	99-06-1987A	01
06	TX	ROUND ROCK, CITY OF	48491C0330D	12-APR-2000	00-06-834A	02
06	TX	ROUND ROCK, CITY OF	48491C0330D	08-FEB-2000	99-06-1133P	05
06	TX	ROWLETT, CITY OF	4801850010C	07-JAN-2000	00-06-357A	02
06	TX	ROWLETT, CITY OF	4801850005C	21-APR-2000	00-06-787A	02
06	TX	ROWLETT, CITY OF	4801850005C	28-APR-2000	00-06-830A	02
06	TX	SAGINAW, CITY OF	48439C0280H	24-JAN-2000	00-06-101P	05
06	TX	SAGINAW, CITY OF	48439C0260H	24-MAR-2000	99-06-1719P	05
06	TX	SAN ANTONIO, CITY OF	48029C0244E	12-MAY-2000	00-06-1016A	02
06	TX	SAN ANTONIO, CITY OF	48029C0244E	12-MAY-2000	00-06-1018A	02
06	TX	SAN ANTONIO, CITY OF	48029C0254E	28-JAN-2000	00-06-407A	02
06	TX	SAN ANTONIO, CITY OF	48029C0257E	08-MAR-2000	00-06-500A	02
06	TX	SAN ANTONIO, CITY OF	48029C0257E	28-FEB-2000	00-06-553A	02
06	TX	SAN ANTONIO, CITY OF	48029C0279E	13-MAR-2000	00-06-681A	02
06	TX	SAN ANTONIO, CITY OF	48029C0259E	21-APR-2000	00-06-924A	02
06	TX	SAN ANTONIO, CITY OF	48029C0268E	02-MAY-2000	00-06-969A	02
06	TX	SAN ANTONIO, CITY OF	48029C0256E	11-APR-2000	99-06-1046P	05

Region	State	Community	Map panel	Determination date	Case No.	Type
06	TX	SAN ANTONIO, CITY OF	48029C0257E	11-APR-2000	99-06-1046P	05
06	TX	SAN ANTONIO, CITY OF	48029C0258E	11-APR-2000	99-06-1046P	05
06	TX	SAN ANTONIO, CITY OF	48029C0259E	11-APR-2000	99-06-1046P	05
06	TX	SAN ANTONIO, CITY OF	48029C0267E	11-APR-2000	99-06-1046P	05
06	TX	SAN ANTONIO, CITY OF	48029C0276E	11-APR-2000	99-06-1046P	05
06	TX	SAN ANTONIO, CITY OF	48029C0277E	11-APR-2000	99-06-1046P	05
06	TX	SAN ANTONIO, CITY OF	48029C0278E	11-APR-2000	99-06-1046P	05
06	TX	SAN ANTONIO, CITY OF	48029C0279E	11-APR-2000	99-06-1046P	05
06	TX	SAN ANTONIO, CITY OF	48029C0281E	11-APR-2000	99-06-1046P	05
06	TX	SAN ANTONIO, CITY OF	48029C0283E	11-APR-2000	99-06-1046P	05
06	TX	SAN ANTONIO, CITY OF	48029C0284E	11-APR-2000	99-06-1046P	05
06	TX	SAN ANTONIO, CITY OF	48029C0286E	11-APR-2000	99-06-1046P	05
06	TX	SAN ANTONIO, CITY OF	48029C0287E	11-APR-2000	99-06-1046P	05
06	TX	SAN ANTONIO, CITY OF	48029C0291E	11-APR-2000	99-06-1046P	05
06	TX	SAN ANTONIO, CITY OF	48029C0292E	11-APR-2000	99-06-1046P	05
06	TX	SAN ANTONIO, CITY OF	48029C0293E	11-APR-2000	99-06-1046P	05
06	TX	SAN ANTONIO, CITY OF	48029C0294E	11-APR-2000	99-06-1046P	05
06	TX	SAN ANTONIO, CITY OF	48029C0456E	11-APR-2000	99-06-1046P	05
06	TX	SAN ANTONIO, CITY OF	48029C0458E	11-APR-2000	99-06-1046P	05
06	TX	SAN ANTONIO, CITY OF	48029C0466E	11-APR-2000	99-06-1046P	05
06	TX	SAN ANTONIO, CITY OF	48029C0468E	11-APR-2000	99-06-1046P	05
06	TX	SAN ANTONIO, CITY OF	48029C0631E	11-APR-2000	99-06-1046P	05
06	TX	SAN ANTONIO, CITY OF	48029C0632E	11-APR-2000	99-06-1046P	05
06	TX	SAN ANTONIO, CITY OF	48029C0633E	11-APR-2000	99-06-1046P	05
06	TX	SAN ANTONIO, CITY OF	48029C0634E	11-APR-2000	99-06-1046P	05
06	TX	SAN ANTONIO, CITY OF	48029C0253E	20-JAN-2000	99-06-1195P	05
06	TX	SAN ANTONIO, CITY OF	48029C0242E	11-MAY-2000	99-06-1393P	05
06	TX	SAN ANTONIO, CITY OF	48029C0261E	11-MAY-2000	99-06-1393P	05
06	TX	SAN ANTONIO, CITY OF	48029C0442E	28-JAN-2000	99-06-1411A	02
06	TX	SAN ANTONIO, CITY OF	48029C0254E	24-JAN-2000	99-06-1804P	05
06	TX	SAN ANTONIO, CITY OF	48029C0262E	24-JAN-2000	99-06-1804P	05
06	TX	SAN ANTONIO, CITY OF	48029C0470E	08-FEB-2000	99-06-1911P	06
06	TX	SAN MARCOS, CITY OF	48209C0227E	02-MAR-2000	98-06-1489P	05
06	TX	SAN MARCOS, CITY OF	48209C0229E	02-MAR-2000	98-06-1489P	05
06	TX	SAN MARCOS, CITY OF	48209C0231E	02-MAR-2000	98-06-1489P	05
06	TX	SCHERTZ, CITY OF	4802690015D	15-MAR-2000	00-06-699A	02
06	TX	SEGUIN, CITY OF	4855080010D	08-MAR-2000	99-06-2093V	19
06	TX	SHAVANO PARK, TOWN OF	48029C0258E	11-APR-2000	99-06-1046P	05
06	TX	SMITH COUNTY	4811850300B	24-MAY-2000	00-06-1087A	02
06	TX	SMITH COUNTY	4811850250B	18-JAN-2000	00-06-497A	02
06	TX	SOMERVILLE, CITY OF	4800910001B	02-FEB-2000	99-06-1953P	05
06	TX	SOUTH LAKE, CITY OF	48439C0185H	16-MAY-2000	00-06-959A	02
06	TX	SPRINGTOWN, CITY OF	4805210005B	24-MAR-2000	00-06-549A	02
06	TX	STAFFORD, CITY OF	48157C0255J	07-JAN-2000	00-06-211A	01
06	TX	TARRANT COUNTY	48439C0130H	17-APR-2000	00-06-885A	01
06	TX	TEXARKANA, CITY OF	4800600010C	08-MAY-2000	00-06-987A	02
06	TX	TRAVIS COUNTY	48453C0325E	28-APR-2000	00-06-354A	02
06	TX	TRAVIS COUNTY	48453C0135F	14-FEB-2000	00-06-503A	17
06	TX	TRAVIS COUNTY	48453C0215G	03-MAY-2000	00-06-852P	06
06	TX	TRAVIS COUNTY	48453C0280E	21-JUN-2000	00-06-872A	02
06	TX	TRAVIS COUNTY	48453C0360E	21-APR-2000	00-06-922A	02
06	TX	TRAVIS COUNTY	48453C0095F	28-JAN-2000	97-06-938V	19
06	TX	TRAVIS COUNTY	48453C0175F	28-JAN-2000	97-06-938V	19
06	TX	TRAVIS COUNTY	48453C0215G	28-JAN-2000	97-06-938V	19
06	TX	TRAVIS COUNTY	48453C0245E	28-JAN-2000	97-06-938V	19
06	TX	TRAVIS COUNTY	48453C0260F	28-JAN-2000	97-06-938V	19
06	TX	TYLER, CITY OF	4805710015B	27-MAR-2000	00-06-769A	02
06	TX	UVALDE COUNTY	4806290100B	28-FEB-2000	00-06-499A	01
06	TX	VICTORIA, CITY OF	4806380005G	10-MAR-2000	00-06-471A	02
06	TX	WACO, CITY OF	4804560130B	20-APR-2000	00-06-325A	02
06	TX	WACO, CITY OF	4804610003A	17-MAY-2000	00-06-693A	01
06	TX	WALKER COUNTY	4810420007B	09-JUN-2000	00-06-858A	02
06	TX	WAXAHACHIE, CITY OF	48139C0185D	21-JUN-2000	00-06-1235A	02
06	TX	WAXAHACHIE, CITY OF	48139C0195D	03-APR-2000	00-06-663A	02
06	TX	WEATHERFORD, CITY OF	4805220010C	03-MAR-2000	00-06-465A	02
06	TX	WEBSTER, CITY OF	48201C1070K	21-APR-2000	00-06-1064V	19
06	TX	WEST KEEGANS BAYOU IMPROVEMENT DISTRICT	48157C0120J	10-FEB-2000	99-06-1867P	05
06	TX	WESTLAKE, TOWN OF	48121C0660E	15-MAY-2000	00-06-876P	05
06	TX	WICHITA FALLS, CITY OF	4806620030F	11-FEB-2000	00-06-344P	05
06	TX	WICHITA FALLS, CITY OF	4806620025E	28-JAN-2000	99-06-2092V	19
06	TX	WICHITA FALLS, CITY OF	4806620030F	28-JAN-2000	99-06-2092V	19
06	TX	WILLIAMSON COUNTY	48491C0325D	01-MAR-2000	99-06-1272P	05
06	TX	WILSON COUNTY	4802300006A	06-JAN-2000	00-06-079A	02

Region	State	Community	Map panel	Determination date	Case No.	Type
06	TX	WILSON COUNTY	4802300002B	31-MAY-2000	00-06-971A	02
06	TX	WISE COUNTY	48497C0175C	08-MAY-2000	00-06-1000A	02
06	TX	WOLFFORTH, TOWN OF	4809150007A	02-FEB-2000	00-06-408A	02
07	IA	ADEL, CITY OF		20-JAN-2000	97-07-454V	19
07	IA	ADEL, CITY OF	19049C0118D	20-JAN-2000	98-07-741V	19
07	IA	AMES, CITY OF	1909070065B	03-APR-2000	99-07-334P	06
07	IA	ANKENY, CITY OF	1902260003C	24-MAR-2000	98-07-896V	19
07	IA	BETTENDORF, CITY OF	1902400004D	11-FEB-2000	00-07-145A	02
07	IA	BUCHANAN COUNTY	1908480025C	24-FEB-2000	00-07-179A	02
07	IA	BUCHANAN COUNTY	1908480125C	18-FEB-2000	00-07-280A	02
07	IA	BUTLER COUNTY	1908500005A	21-JUN-2000	00-07-511A	02
07	IA	CEDAR COUNTY	190050B	16-FEB-2000	00-07-197A	02
07	IA	CEDAR FALLS, CITY OF	1900170002B	05-JAN-2000	00-07-125A	02
07	IA	CEDAR FALLS, CITY OF	1900170004B	30-JUN-2000	00-07-221P	06
07	IA	CEDAR FALLS, CITY OF	1900170006B	18-APR-2000	00-07-254A	01
07	IA	CEDAR FALLS, CITY OF	1900170002B	28-MAR-2000	00-07-337A	02
07	IA	CEDAR RAPIDS, CITY OF	1901870015C	13-MAR-2000	00-07-084P	06
07	IA	CLEAR LAKE, CITY OF	1900590002B	21-JAN-2000	00-07-009A	01
07	IA	CLEAR LAKE, CITY OF	1900590001B	10-JAN-2000	00-07-130A	02
07	IA	CLIVE, CITY OF	1904880005C	10-FEB-2000	00-07-201A	02
07	IA	CLIVE, CITY OF	1904880010C	04-FEB-2000	00-07-275A	02
07	IA	CLIVE, CITY OF	1904880005C	02-JUN-2000	00-07-298A	02
07	IA	CLIVE, CITY OF	1904880010C	18-FEB-2000	00-07-322A	02
07	IA	DALLAS COUNTY	19049C0185D	12-APR-2000	00-07-349A	02
07	IA	DES MOINES, CITY OF	1902270006D	13-MAR-2000	00-07-220P	06
07	IA	DES MOINES, CITY OF	1902270009E	13-MAR-2000	00-07-220P	06
07	IA	EMMETT COUNTY	1908650200B	06-JUN-2000	00-07-401A	02
07	IA	GRIMES, CITY OF	1902280001B	25-MAY-2000	00-07-369A	02
07	IA	GUTHRIE COUNTY	1908710004B	04-FEB-2000	00-07-165A	02
07	IA	HUMBOLDT, CITY OF	1901550005B	19-JAN-2000	99-07-844A	02
07	IA	INDEPENDENCE, CITY OF	1900310001C	21-JUN-2000	00-07-433A	02
07	IA	JOHNSON COUNTY	1908820040B	14-FEB-2000	00-07-190A	02
07	IA	JOHNSON COUNTY	1908820055B	21-MAR-2000	00-07-192A	02
07	IA	LEE COUNTY	1901820125B	14-MAR-2000	00-07-320A	02
07	IA	LINN COUNTY	1908290085B	13-MAR-2000	00-07-084P	06
07	IA	LINN COUNTY	1908290090B	30-JUN-2000	00-07-452A	01
07	IA	LINN COUNTY	1908290130B	23-JUN-2000	00-07-480A	02
07	IA	NASHUA, CITY OF	1900680001B	14-FEB-2000	00-07-172A	02
07	IA	NICHOLS, CITY OF	1902140001B	01-MAY-2000	00-07-396A	02
07	IA	NORTH LIBERTY, CITY OF	1906300005A	30-JUN-2000	00-07-183A	02
07	IA	RIVERSIDE, CITY OF	190648A	31-MAR-2000	00-07-355P	06
07	IA	SPENCER, CITY OF	1900710005B	14-MAR-2000	00-07-303A	01
07	IA	STORY COUNTY	1909070065B	03-APR-2000	99-07-334P	06
07	IA	VAN METER, CITY OF		20-JAN-2000	97-07-456V	19
07	IA	VAN METER, CITY OF	19049C0192D	20-JAN-2000	98-07-741V	19
07	IA	VINTON, CITY OF	1900160005B	03-MAY-2000	00-07-399A	02
07	IA	VOLGA, CITY OF	190085B	04-APR-2000	00-07-289A	02
07	IA	WATERLOO, CITY OF	1900250005E	09-FEB-2000	00-07-175A	01
07	IA	WATERLOO, CITY OF	1900250016E	14-MAR-2000	00-07-302A	02
07	IA	WATERLOO, CITY OF	1900250015E	16-JUN-2000	00-07-365A	02
07	IA	WATERLOO, CITY OF	1900250014E	12-MAY-2000	00-07-456A	02
07	IA	WATERLOO, CITY OF	1900250008E	22-FEB-2000	99-07-355P	05
07	IA	WATERLOO, CITY OF	1900250016E	22-FEB-2000	99-07-355P	05
07	IA	WAUKEE, CITY OF	19049C0140D	21-JUN-2000	00-07-531A	02
07	IA	WAVERLY, CITY OF	19017C0054C	11-APR-2000	00-07-343A	02
07	IA	WAVERLY, CITY OF	19017C0054C	16-JUN-2000	00-07-454A	02
07	IA	WAVERLY, CITY OF	19017C0054C	02-JUN-2000	00-07-462A	02
07	IA	WEST DES MOINES, CITY OF	1902310005B	13-MAR-2000	00-07-278A	02
07	KS	ARKANSAS CITY, CITY OF	2000700004B	26-MAY-2000	00-07-364A	02
07	KS	BEL AIRE, CITY OF	2008640005B	04-MAY-2000	00-07-316A	02
07	KS	BUTLER COUNTY	2000370160B	02-MAR-2000	99-07-853P	05
07	KS	CHAPMAN, CITY OF	20041C0085C	18-JAN-2000	00-07-141A	02
07	KS	ELLSWORTH, CITY OF	2000980001B	28-JUN-2000	00-07-286A	02
07	KS	HALSTEAD, CITY OF	2001310001D	26-MAY-2000	00-07-450A	02
07	KS	HAYSVILLE, CITY OF	2003240001C	02-JUN-2000	00-07-467A	02
07	KS	KANSAS CITY, CITY OF	2003630005C	04-APR-2000	00-07-217A	02
07	KS	LIBERAL, CITY OF	2003300020C	11-APR-2000	00-07-330A	02
07	KS	LIBERAL, CITY OF	2003300020C	21-JUN-2000	00-07-451A	02
07	KS	LIBERAL, CITY OF	2003300020C	20-MAR-2000	99-07-925P	06
07	KS	MCPHERSON, CITY OF	2002170015D	30-MAY-2000	00-07-271A	02
07	KS	MCPHERSON, CITY OF	2002170015D	11-APR-2000	00-07-304A	02
07	KS	MCPHERSON, CITY OF	2002170015D	06-JUN-2000	00-07-352A	02
07	KS	MCPHERSON, CITY OF	2002170015D	09-MAY-2000	00-07-387A	01

Region	State	Community	Map panel	Determination date	Case No.	Type
07	KS	MCPHERSON, CITY OF	2002170005D	30-JUN-2000	00-07-513A	02
07	KS	MONTGOMERY COUNTY	2005950004B	28-JUN-2000	00-07-363A	02
07	KS	MOUNDRIDGE, CITY OF	2002180001B	08-JUN-2000	00-07-394A	02
07	KS	MULVANE, CITY OF	2003260010D	14-JUN-2000	00-07-446A	02
07	KS	NEWTON, CITY OF	2001330005C	14-FEB-2000	00-07-196A	02
07	KS	NEWTON, CITY OF	2001330005C	17-APR-2000	00-07-312A	02
07	KS	NEWTON, CITY OF	2001330005C	11-APR-2000	00-07-393A	02
07	KS	NEWTON, CITY OF	2001330005C	28-JUN-2000	00-07-500A	01
07	KS	NICKERSON, CITY OF	20155C0090D	28-MAR-2000	00-07-373A	02
07	KS	OGDEN, CITY OF	2003010001B	25-APR-2000	00-07-361A	02
07	KS	OVERLAND PARK, CITY OF	20091C0085E	11-FEB-2000	00-07-195A	02
07	KS	OVERLAND PARK, CITY OF	20091C0081E	03-MAY-2000	00-07-395A	02
07	KS	PAOLA, CITY OF	200220A	30-MAY-2000	99-07-021P	05
07	KS	PAOLA, CITY OF	2002240001B	30-MAY-2000	99-07-021P	05
07	KS	PARK CITY, CITY OF	2009630001A	16-FEB-2000	00-07-198A	02
07	KS	PARK CITY, CITY OF	2003210150A	03-MAR-2000	00-07-199A	01
07	KS	PITTSBURG, CITY OF	2000720005D	14-JUN-2000	00-07-376A	02
07	KS	RENO COUNTY	20155C0500D	10-FEB-2000	00-07-185A	02
07	KS	RENO COUNTY	20155C0280D	08-FEB-2000	00-07-241A	02
07	KS	RENO COUNTY	20155C0280D	18-FEB-2000	00-07-273A	02
07	KS	RENO COUNTY	20155C0315D	01-APR-2000	00-07-313A	02
07	KS	RENO COUNTY	20155C0315D	01-MAY-2000	00-07-389A	02
07	KS	RENO COUNTY	20155C0315D	02-JUN-2000	00-07-420A	02
07	KS	RENO COUNTY	20155C0315D	21-JUN-2000	00-07-423A	01
07	KS	RICE COUNTY	2002900008C	08-FEB-2000	00-07-169A	02
07	KS	RICE COUNTY	2002900008C	09-FEB-2000	00-07-186A	02
07	KS	SALINA, CITY OF	2203160060B	20-APR-2000	00-07-071A	02
07	KS	SALINA, CITY OF	2003190015B	05-JAN-2000	00-07-072A	02
07	KS	SALINA, CITY OF	2003160060B	05-JAN-2000	00-07-122A	02
07	KS	SALINA, CITY OF	2003190015B	11-JAN-2000	00-07-128A	02
07	KS	SALINA, CITY OF	2003190005B	05-JAN-2000	00-07-151A	02
07	KS	SALINA, CITY OF	2003190005B	05-JAN-2000	00-07-152A	02
07	KS	SALINA, CITY OF	2003160060B	02-FEB-2000	00-07-161A	02
07	KS	SALINA, CITY OF	2003190015B	24-JAN-2000	00-07-177A	02
07	KS	SALINA, CITY OF	2003190015B	10-MAY-2000	00-07-184A	01
07	KS	SALINA, CITY OF	2003160060B	11-FEB-2000	00-07-206A	02
07	KS	SALINA, CITY OF	2003190015B	22-FEB-2000	00-07-218A	02
07	KS	SALINA, CITY OF	2003190015B	14-MAR-2000	00-07-235A	02
07	KS	SALINA, CITY OF	2003160060B	30-MAR-2000	00-07-237A	02
07	KS	SALINA, CITY OF	2003190015B	30-MAR-2000	00-07-249A	02
07	KS	SALINA, CITY OF	2003190015B	30-MAR-2000	00-07-268A	02
07	KS	SALINA, CITY OF	2003190015B	01-APR-2000	00-07-277A	02
07	KS	SALINA, CITY OF	2003190015B	18-FEB-2000	00-07-287A	02
07	KS	SALINA, CITY OF	2003160060B	17-APR-2000	00-07-288A	02
07	KS	SALINA, CITY OF	2003190005B	06-JUN-2000	00-07-296A	02
07	KS	SALINA, CITY OF	2003190015B	27-MAR-2000	00-07-318A	02
07	KS	SALINA, CITY OF	2003190015B	27-MAR-2000	00-07-321A	02
07	KS	SALINA, CITY OF	2003190015B	11-APR-2000	00-07-344A	02
07	KS	SALINA, CITY OF	2003190015B	26-APR-2000	00-07-350A	02
07	KS	SALINA, CITY OF	2003190015B	02-JUN-2000	00-07-357A	02
07	KS	SALINA, CITY OF	2003190015B	25-MAY-2000	00-07-392A	02
07	KS	SALINA, CITY OF	2003190005B	06-JUN-2000	00-07-409A	02
07	KS	SALINA, CITY OF	2003190005B	24-APR-2000	00-07-410A	02
07	KS	SALINA, CITY OF	2003190015B	07-JUN-2000	00-07-411A	02
07	KS	SALINA, CITY OF	2003190015B	14-JUN-2000	00-07-439A	02
07	KS	SALINA, CITY OF	2003190015B	25-MAY-2000	00-07-445A	02
07	KS	SALINA, CITY OF	2003190015B	16-JUN-2000	00-07-463A	02
07	KS	SALINA, CITY OF	2003190015B	30-JUN-2000	00-07-537A	02
07	KS	SALINA, CITY OF	2003160060B	21-JAN-2000	99-07-896P	06
07	KS	SALINE COUNTY	2003160060B	03-MAY-2000	00-07-276A	02
07	KS	SALINE COUNTY	2003160100B	12-APR-2000	00-07-285A	02
07	KS	SALINE COUNTY	2003160060B	16-JUN-2000	00-07-425A	02
07	KS	SALINE COUNTY	2003160055B	08-JUN-2000	00-07-476A	02
07	KS	SEDGWICK COUNTY	2003210125A	10-JAN-2000	00-07-075A	02
07	KS	SEDGWICK COUNTY	2003210300A	18-JAN-2000	00-07-143A	02
07	KS	SEDGWICK COUNTY	2003210150A	03-MAR-2000	00-07-210A	02
07	KS	SEDGWICK COUNTY	2003210125A	11-MAY-2000	00-07-283A	02
07	KS	SEDGWICK COUNTY	2003210225A	25-MAY-2000	00-07-374A	02
07	KS	SEDGWICK COUNTY	2003210225A	16-JUN-2000	00-07-465A	02
07	KS	SHAWNEE COUNTY	2003310095C	28-JUN-2000	00-07-372A	01
07	KS	SUMNER COUNTY	20191C0200B	25-MAY-2000	00-07-406A	02
07	KS	WICHITA, CITY OF	2003280035B	24-JAN-2000	00-07-155A	02
07	KS	WICHITA, CITY OF	2003280005B	27-JAN-2000	00-07-159A	02

Region	State	Community	Map panel	Determination date	Case No.	Type
07	KS	WICHITA, CITY OF	2003280015B	27-JAN-2000	00-07-181A	02
07	KS	WICHITA, CITY OF	2003280005B	14-FEB-2000	00-07-191A	02
07	KS	WICHITA, CITY OF	2003280030B	16-FEB-2000	00-07-193A	02
07	KS	WICHITA, CITY OF	2003280025B	19-APR-2000	00-07-242A	02
07	KS	WICHITA, CITY OF	2003280005B	23-JUN-2000	00-07-274A	02
07	KS	WICHITA, CITY OF	2003280030B	11-APR-2000	00-07-338A	02
07	KS	WICHITA, CITY OF	2003280025B	01-APR-2000	00-07-339A	02
07	KS	WICHITA, CITY OF	2003210225A	02-JUN-2000	00-07-421A	01
07	KS	WICHITA, CITY OF	2003280030B	21-JUN-2000	00-07-437A	02
07	KS	WICHITA, CITY OF	2003280030B	21-JUN-2000	00-07-441A	02
07	KS	WICHITA, CITY OF	2003280020B	02-JUN-2000	00-07-457A	02
07	MO	BUTLER COUNTY	2900440115B	13-JAN-2000	00-07-016A	02
07	MO	BUTLER COUNTY	2900440050C	21-JUN-2000	00-07-413A	02
07	MO	BUTLER COUNTY	2900440130D	27-JAN-2000	99-07-946P	05
07	MO	CAMDEN COUNTY	2907890002B	28-JUN-2000	00-07-499A	02
07	MO	CASS COUNTY	2907830100C	28-JAN-2000	00-07-182A	02
07	MO	CASS COUNTY	2907830075B	26-MAY-2000	00-07-442A	02
07	MO	CHESTERFIELD, CITY OF	29189C0120H	17-APR-2000	99-07-214P	05
07	MO	CHESTERFIELD, CITY OF	29189C0140H	17-APR-2000	99-07-214P	05
07	MO	CHRISTIAN COUNTY	2908470003A	14-JUN-2000	00-07-253A	02
07	MO	CHRISTIAN COUNTY	2908470003A	19-APR-2000	00-07-356A	02
07	MO	CLAY COUNTY	290086IND0	22-MAR-2000	99-07-807P	05
07	MO	COLE COUNTY	2901070060B	07-APR-2000	00-07-082A	02
07	MO	COOPER COUNTY	2907940025B	22-FEB-2000	00-07-108A	02
07	MO	DALLAS COUNTY	2907970175A	22-FEB-2000	00-07-117A	02
07	MO	DARDENNE PRAIRIE, TOWN OF	29183C0430E	01-FEB-2000	00-07-189A	01
07	MO	EUREKA, CITY OF	29189C0263H	09-JUN-2000	00-07-106A	01
07	MO	FENTON, CITY OF	29189C0289H	14-MAR-2000	00-07-258A	02
07	MO	FENTON, CITY OF	29189C0289H	16-JUN-2000	00-07-347A	02
07	MO	FRANKLIN COUNTY	2904930160B	21-JUN-2000	00-07-293A	02
07	MO	FRANKLIN COUNTY	2904930250B	11-APR-2000	00-07-341A	02
07	MO	FRONTENAC, CITY OF	29189C0168H	11-JAN-2000	00-07-134A	02
07	MO	FRONTENAC, CITY OF	29189C0281H	15-MAR-2000	00-07-168A	02
07	MO	FRONTENAC, CITY OF	29189C0281H	25-MAY-2000	00-07-230A	02
07	MO	GREENE COUNTY	2907820090B	24-FEB-2000	00-07-136A	01
07	MO	INDEPENDENCE, CITY OF	2901720010E	22-MAR-2000	99-07-964V	19
07	MO	INDEPENDENCE, CITY OF	2901720020E	22-MAR-2000	99-07-964V	19
07	MO	INDEPENDENCE, CITY OF	2901720035E	22-MAR-2000	99-07-964V	19
07	MO	JACKSON COUNTY	290492IND0	15-MAY-2000	00-07-336P	06
07	MO	JACKSON COUNTY	290492IND0	22-MAR-2000	99-07-807P	05
07	MO	JEFFERSON COUNTY	2908080165B	10-MAR-2000	00-07-051A	02
07	MO	JEFFERSON COUNTY	2908080090D	01-MAR-2000	00-07-236A	02
07	MO	JEFFERSON COUNTY	2908080020B	27-MAR-2000	00-07-248A	02
07	MO	JEFFERSON COUNTY	2908080115C	18-APR-2000	00-07-256A	02
07	MO	JOPLIN, CITY OF	2901830025C	28-JUN-2000	00-07-307A	02
07	MO	KANSAS CITY, CITY OF	2901730060B	22-FEB-2000	00-07-194A	02
07	MO	LAFAYETTE COUNTY	2908120100B	19-JAN-2000	00-07-144A	02
07	MO	MANCHESTER, CITY OF	29189C0257H	02-FEB-2000	00-07-163A	02
07	MO	MARYLAND HEIGHTS, CITY OF	29189C0152H	16-MAY-2000	00-07-331A	02
07	MO	MILLER COUNTY	2902260200A	13-JAN-2000	00-07-149A	02
07	MO	MORGAN COUNTY	2902440200A	24-APR-2000	00-07-244A	02
07	MO	O'FALLON, CITY OF	29183C0430E	24-MAY-2000	00-07-204P	05
07	MO	O'FALLON, CITY OF	29183C0230E	23-JUN-2000	00-07-294A	01
07	MO	O'FALLON, CITY OF	29183C0235E	18-APR-2000	00-07-367A	02
07	MO	O'FALLON, CITY OF	29183C0430E	19-APR-2000	00-07-368A	01
07	MO	O'FALLON, CITY OF	29183C0239E	23-JUN-2000	00-07-489A	17
07	MO	PECULIAR, CITY OF	2908780001A	09-MAY-2000	00-07-323A	02
07	MO	RAY COUNTY	290778IND0	15-MAY-2000	00-07-336P	06
07	MO	RAY COUNTY	290778IND0	22-MAR-2000	99-07-807P	05
07	MO	REPUBLIC, CITY OF	2901480001B	24-FEB-2000	00-07-212A	02
07	MO	SCOTT COUNTY	2908370075B	18-JAN-2000	00-07-160A	02
07	MO	SCOTT COUNTY	2908370125B	11-APR-2000	00-07-333A	02
07	MO	SEDALIA, CITY OF	2902830001C	26-APR-2000	00-07-188A	02
07	MO	SEDALIA, CITY OF	2902830001C	13-MAR-2000	00-07-233A	02
07	MO	ST. CHARLES COUNTY	29183C0235E	01-MAR-2000	00-07-232A	02
07	MO	ST. CHARLES COUNTY	29183C0435E	07-JUN-2000	00-07-292A	02
07	MO	ST. CHARLES COUNTY	29183C0288E	08-JUN-2000	00-07-346A	02
07	MO	ST. CHARLES COUNTY	29183C0235E	26-APR-2000	00-07-385A	02
07	MO	ST. CHARLES, CITY OF	29183C0286E	28-FEB-2000	00-07-174A	01
07	MO	ST. LOUIS COUNTY	29189C0311H	16-MAY-2000	00-07-334A	02
07	MO	ST. LOUIS COUNTY	29189C0289H	16-MAY-2000	00-07-412A	02
07	MO	ST. PETERS, CITY OF	29183C0264E	24-JAN-2000	00-07-150A	02
07	MO	ST. PETERS, CITY OF	29183C0242E	27-MAR-2000	00-07-243A	02

Region	State	Community	Map panel	Determination date	Case No.	Type
07	MO	ST. PETERS, CITY OF	29183C0264E	01-MAR-2000	00-07-257A	02
07	MO	UNION STAR, CITY OF	290512B	03-MAR-2000	00-07-166P	06
07	MO	UNION, CITY OF	2901370005B	30-MAY-2000	00-07-371A	02
07	MO	UNIVERSITY CITY, CITY OF	29189C0191H	14-JUN-2000	00-07-475A	02
07	MO	WARREN COUNTY	2904430075C	05-JAN-2000	00-07-114A	02
07	MO	WARREN COUNTY	2904430125B	05-JAN-2000	00-07-115A	02
07	MO	WARREN COUNTY	2904430075C	09-MAR-2000	00-07-148A	02
07	MO	WARREN COUNTY	2904430075C	01-MAR-2000	00-07-250A	02
07	MO	WARREN COUNTY	2904430075C	14-MAR-2000	00-07-251A	02
07	MO	WARREN COUNTY	2904430125B	01-MAR-2000	00-07-263A	02
07	MO	WARREN COUNTY	2904430075C	13-APR-2000	00-07-444A	02
07	MO	WILDWOOD, CITY OF	29189C0115H	17-APR-2000	99-07-214P	05
07	MO	WILDWOOD, CITY OF	29189C0120H	17-APR-2000	99-07-214P	05
07	NE	BEATRICE, CITY OF	3100910015B	19-APR-2000	00-07-213A	01
07	NE	CENTRAL CITY, CITY OF	3101480005C	24-MAR-2000	00-07-329A	02
07	NE	CENTRAL CITY, CITY OF	3101480005C	30-MAY-2000	00-07-436A	02
07	NE	CRETE, CITY OF	3101860003C	14-JUN-2000	00-07-470A	02
07	NE	DOUGLAS COUNTY	3100730125B	21-JUN-2000	00-07-332A	01
07	NE	GAGE COUNTY	3100880001B	07-APR-2000	00-07-211A	02
07	NE	GRAND ISLAND, CITY OF	3101030015B	19-JAN-2000	00-07-147A	02
07	NE	GRAND ISLAND, CITY OF	3101030020B	10-FEB-2000	00-07-200A	02
07	NE	GRAND ISLAND, CITY OF	3101030020B	22-MAR-2000	00-07-301A	02
07	NE	GRAND ISLAND, CITY OF	3101030015B	22-MAR-2000	00-07-306A	02
07	NE	GRAND ISLAND, CITY OF	3101030005B	11-APR-2000	00-07-310A	02
07	NE	GRAND ISLAND, CITY OF	3101030020B	22-MAR-2000	00-07-311A	02
07	NE	GRAND ISLAND, CITY OF	3101030015B	22-MAR-2000	00-07-315A	02
07	NE	GRAND ISLAND, CITY OF	3101000100C	01-MAY-2000	00-07-317A	02
07	NE	GRAND ISLAND, CITY OF	3101030010B	22-MAR-2000	00-07-327A	02
07	NE	GRAND ISLAND, CITY OF	3101030020B	01-APR-2000	00-07-335A	02
07	NE	GRAND ISLAND, CITY OF	3101030005B	26-APR-2000	00-07-382A	02
07	NE	GRAND ISLAND, CITY OF	3101030015B	25-APR-2000	00-07-384A	02
07	NE	GRAND ISLAND, CITY OF	3101030015B	01-MAY-2000	00-07-386A	02
07	NE	GRAND ISLAND, CITY OF	3101030020B	11-APR-2000	00-07-388A	02
07	NE	GRAND ISLAND, CITY OF	3101030015B	25-MAY-2000	00-07-428A	02
07	NE	GRAND ISLAND, CITY OF	3101030010B	25-MAY-2000	00-07-430A	02
07	NE	GRAND ISLAND, CITY OF	3101030015B	25-MAY-2000	00-07-432A	02
07	NE	GRAND ISLAND, CITY OF	3101030015B	28-JUN-2000	00-07-484A	02
07	NE	GRAND ISLAND, CITY OF	3101030015B	28-JUN-2000	00-07-533A	02
07	NE	GRAND ISLAND, CITY OF	3101030015B	28-JUN-2000	00-07-559A	02
07	NE	HALL COUNTY	3101000025C	30-JUN-2000	00-07-140A	01
07	NE	HALL COUNTY	3101000050C	19-JAN-2000	00-07-146A	02
07	NE	HAMILTON COUNTY	3104410025A	28-JAN-2000	00-07-180A	02
07	NE	HOWELLS, VILLAGE OF	3103800001B	30-MAY-2000	99-07-932P	05
07	NE	HOWELLS, VILLAGE OF	3103800002B	30-MAY-2000	99-07-932P	05
07	NE	JUNIATA, VILLAGE OF	3102930001B	18-JAN-2000	00-07-031A	01
07	NE	LINCOLN, CITY OF	3152730020D	21-JUN-2000	00-07-113A	01
07	NE	LINCOLN, CITY OF	3152730040C	24-APR-2000	00-07-116A	02
07	NE	LINCOLN, CITY OF	3152730025D	10-FEB-2000	00-07-121A	01
07	NE	LINCOLN, CITY OF	3152730025D	10-FEB-2000	00-07-202A	01
07	NE	LINCOLN, CITY OF	3152730020D	02-JUN-2000	00-07-272A	02
07	NE	LINCOLN, CITY OF	3152730025D	25-MAY-2000	00-07-295A	01
07	NE	LINCOLN, CITY OF	3152730025D	28-MAR-2000	00-07-324A	02
07	NE	LINCOLN, CITY OF	3152730025D	01-MAY-2000	00-07-377A	02
07	NE	LINCOLN, CITY OF	3152730025D	24-APR-2000	00-07-380A	02
07	NE	LINCOLN, CITY OF	3152730025D	28-JUN-2000	00-07-398A	01
07	NE	MERRICK COUNTY	3104570150A	13-JAN-2000	00-07-097A	02
07	NE	MERRICK COUNTY	3104570175B	24-MAR-2000	00-07-176A	02
07	NE	MERRICK COUNTY	3104570125B	14-JUN-2000	00-07-209A	02
07	NE	MERRICK COUNTY	3104570150A	14-JUN-2000	00-07-209A	02
07	NE	MERRICK COUNTY	3104570150A	02-JUN-2000	00-07-255A	02
07	NE	MERRICK COUNTY	3104570150A	06-JUN-2000	00-07-284A	02
07	NE	NORFOLK, CITY OF	3101470020C	07-JUN-2000	00-07-362A	02
07	NE	OMAHA, CITY OF	3152740025F	03-MAR-2000	00-07-138A	01
07	NE	OMAHA, CITY OF	3152740040F	25-MAY-2000	00-07-259A	01
07	NE	OMAHA, CITY OF	3152740045G	14-JUN-2000	00-07-418A	02
07	NE	PLATTE COUNTY	3104670225D	10-FEB-2000	98-07-196V	19
07	NE	PLATTE COUNTY	3104670200D	25-FEB-2000	99-07-963V	19
07	NE	PLATTE COUNTY	3104670225D	25-FEB-2000	99-07-963V	19
07	NE	SALINE COUNTY	3104720050A	22-FEB-2000	00-07-137A	02
07	NE	SARPY COUNTY	31153C0150F	16-FEB-2000	00-07-208A	02
07	NE	SAUNDERS COUNTY	3101950105B	28-JUN-2000	00-07-291A	02
07	NE	SCHUYLER, CITY OF	3100460005B	11-JAN-2000	00-07-132A	02
07	NE	SCHUYLER, CITY OF	3100460005B	12-JAN-2000	00-07-142A	02

Region	State	Community	Map panel	Determination date	Case No.	Type
07	NE	SCHUYLER, CITY OF	3100460005B	22-FEB-2000	00-07-203A	02
07	NE	SCHUYLER, CITY OF	3100460005B	13-MAR-2000	00-07-240A	02
07	NE	SCHUYLER, CITY OF	3100460005B	11-MAY-2000	00-07-340A	02
07	NE	SCHUYLER, CITY OF	3100460005B	30-JUN-2000	00-07-510A	02
07	NE	SCHUYLER, CITY OF	3100460005B	23-JUN-2000	00-07-524A	02
07	NE	SCOTTS BLUFF COUNTY	3104730075A	24-JAN-2000	00-07-157A	02
07	NE	SEWARD COUNTY	3104740004B	27-MAR-2000	00-07-267A	02
07	NE	SEWARD, CITY OF	3102100005C	30-MAY-2000	00-07-397A	02
07	NE	STANTON, CITY OF	3102170005B	25-MAY-2000	00-07-426A	02
07	NE	WASHINGTON COUNTY	3104830125B	04-FEB-2000	00-07-153A	02
08	CO	ADAMS COUNTY	08001C0075G	09-JUN-2000	00-08-188A	02
08	CO	ARAPAHOE COUNTY	08005C0485J	06-JAN-2000	00-08-023P	05
08	CO	ARAPAHOE COUNTY	08005C0485J	02-MAY-2000	00-08-122A	01
08	CO	ARAPAHOE COUNTY	08005C0280J	21-JUN-2000	00-08-133A	02
08	CO	ARAPAHOE COUNTY	08005C0480J	13-MAR-2000	99-08-204P	05
08	CO	ARAPAHOE COUNTY	08005C0480J	17-MAY-2000	99-08-408P	05
08	CO	ARAPAHOE COUNTY	08005C0455J	29-JUN-2000	99-08-410P	05
08	CO	ARAPAHOE COUNTY	08005C0460J	29-JUN-2000	99-08-410P	05
08	CO	ARAPAHOE COUNTY	08005C0195J	18-FEB-2000	99-08-416P	06
08	CO	ARAPAHOE COUNTY	08005C0215J	18-FEB-2000	99-08-416P	06
08	CO	BRIGHTON, CITY OF	08001C0052G	14-FEB-2000	99-08-445A	01
08	CO	BRIGHTON, CITY OF	08001C0055G	14-FEB-2000	99-08-445A	01
08	CO	CANON CITY, CITY OF	0800680001D	18-JAN-2000	98-08-334P	06
08	CO	COLORADO SPRINGS, CITY OF	08041C0736F	22-FEB-2000	00-08-020A	02
08	CO	DENVER, CITY AND COUNTY OF	0800460022C	05-APR-2000	00-08-154A	01
08	CO	DENVER, CITY AND COUNTY OF	0800460022C	07-FEB-2000	99-08-436A	01
08	CO	DOUGLAS COUNTY	0800490050C	29-JUN-2000	99-08-410P	05
08	CO	ENGLEWOOD, CITY OF	08005C0145J	29-JUN-2000	99-08-410P	05
08	CO	ENGLEWOOD, CITY OF	08005C0165J	29-JUN-2000	99-08-410P	05
08	CO	ENGLEWOOD, CITY OF	08005C0435J	29-JUN-2000	99-08-410P	05
08	CO	ENGLEWOOD, CITY OF	08005C0455J	29-JUN-2000	99-08-410P	05
08	CO	FEDERAL HEIGHTS, CITY OF	08001C0307G	07-FEB-2000	00-08-045P	06
08	CO	FEDERAL HEIGHTS, CITY OF	08001C0330G	07-FEB-2000	00-08-045P	06
08	CO	FREMONT COUNTY	0800670200B	03-MAR-2000	00-08-048A	01
08	CO	FREMONT COUNTY	0800670335B	18-JAN-2000	98-08-334P	06
08	CO	FRUITA, CITY OF	0801940001B	04-MAY-2000	00-08-189P	06
08	CO	GREENWOOD VILLAGE, CITY OF	08005C0455J	29-JUN-2000	99-08-410P	05
08	CO	GUNNISON COUNTY	0800780615B	14-JUN-2000	00-08-228A	02
08	CO	GUNNISON, CITY OF	0800800002C	09-MAR-2000	00-08-126A	02
08	CO	JEFFERSON COUNTY	0800870360B	31-JAN-2000	99-08-359P	05
08	CO	JEFFERSON COUNTY	0800870380C	31-JAN-2000	99-08-359P	05
08	CO	LAMAR, CITY OF	0801460003B	28-MAR-2000	00-08-068A	02
08	CO	LARIMER COUNTY	0801010179E	05-JAN-2000	00-08-064A	02
08	CO	LARIMER COUNTY	0801010179E	31-MAR-2000	00-08-161A	02
08	CO	LITTLETON, CITY OF	0800170010D	29-JUN-2000	99-08-410P	05
08	CO	LOUISVILLE, CITY OF	08013C0560F	19-JAN-2000	99-08-231P	05
08	CO	LOUISVILLE, CITY OF	08013C0576G	19-JAN-2000	99-08-231P	05
08	CO	MANITOU SPRINGS, CITY OF	08041C0706F	22-FEB-2000	00-08-008A	17
08	CO	MONTEZUMA COUNTY	0802850225B	02-JUN-2000	00-08-179A	02
08	CO	PALMER LAKE, TOWN OF	08041C0260F	22-FEB-2000	00-08-070A	02
08	CO	PUEBLO COUNTY	0801470275B	08-MAR-2000	00-08-073P	06
08	CO	PUEBLO COUNTY	0801470360B	08-MAR-2000	00-08-073P	06
08	CO	PUEBLO COUNTY	0801470380B	08-MAR-2000	00-08-073P	06
08	CO	ROCKY FORD, CITY OF	0801350001B	21-JUN-2000	00-08-205A	02
08	CO	THORNTON, CITY OF	08001C0330G	02-MAY-2000	00-08-174A	02
08	CO	WELD COUNTY	0802660605D	09-MAR-2000	00-08-087A	01
08	CO	WELD COUNTY	0802660605D	27-MAR-2000	00-08-168A	01
08	CO	WESTMINSTER, CITY OF	0800080007D	23-MAR-2000	00-08-147P	06
08	CO	WESTMINSTER, CITY OF	0800080003C	01-FEB-2000	99-08-376P	05
08	CO	WHEAT RIDGE, CITY OF	0850790005C	18-JAN-2000	00-08-013A	02
08	MT	CARBON COUNTY	3001390040B	24-MAR-2000	99-08-431A	02
08	MT	FLATHEAD COUNTY	3000231435C	27-JAN-2000	00-08-066A	17
08	MT	FLATHEAD COUNTY	3000231840E	24-APR-2000	00-08-171A	01
08	MT	GLENDIVE, CITY OF	3000150005B	28-JUN-2000	00-08-252A	02
08	MT	GRANITE COUNTY	3001410575A	14-JUN-2000	00-08-146A	02
08	MT	JEFFERSON COUNTY	3001540525B	17-MAY-2000	00-08-203A	02
08	MT	LAKE COUNTY	30047C0100B	08-MAR-2000	00-08-026A	02
08	MT	LEWIS AND CLARK COUNTY	3000381625D	03-MAR-2000	00-08-014A	02
08	MT	LEWIS AND CLARK COUNTY	3000381542C	27-MAR-2000	00-08-124A	02
08	MT	LINCOLN COUNTY	3001571025B	08-MAR-2000	00-08-059A	02
08	MT	LINCOLN COUNTY	3001570620B	16-JUN-2000	00-08-186A	02
08	MT	MILES CITY, CITY OF	3000140005C	12-JAN-2000	00-08-063A	02
08	MT	MISSOULA COUNTY	30063C1755D	23-FEB-2000	00-08-099A	02

Region	State	Community	Map panel	Determination date	Case No.	Type
08	MT	MISSOULA COUNTY	30063C1195D	14-JUN-2000	00-08-199P	06
08	MT	MISSOULA COUNTY	30063C1455D	30-JUN-2000	00-08-239A	02
08	MT	MISSOULA COUNTY	30063C1195D	26-APR-2000	99-08-240P	06
08	MT	MISSOULA, CITY OF	30063C1480D	16-MAY-2000	00-08-091A	02
08	MT	PARK COUNTY	3001600020B	09-FEB-2000	00-08-082A	02
08	MT	PARK COUNTY	3001600016B	21-APR-2000	00-08-165A	02
08	MT	PARK COUNTY	3001600024B	30-MAY-2000	00-08-216A	02
08	MT	PARK COUNTY	3001600016B	28-JUN-2000	00-08-222A	02
08	MT	PARK COUNTY	3001600017B	16-JUN-2000	00-08-229A	02
08	MT	RAVALLI COUNTY	30081C0120C	24-MAY-2000	00-08-110A	01
08	MT	ROUNDUP, CITY OF	3000500001B	08-MAR-2000	00-08-090A	02
08	MT	THREE FORKS, TOWN OF	3000290001B	09-MAR-2000	00-08-127A	02
08	MT	THREE FORKS, TOWN OF	3000290001B	21-MAR-2000	00-08-158A	02
08	MT	THREE FORKS, TOWN OF	3000290001B	28-APR-2000	00-08-181A	02
08	MT	THREE FORKS, TOWN OF	3000290001B	02-JUN-2000	00-08-207A	02
08	MT	WIBAUX, TOWN OF	30109C0180D	10-MAR-2000	00-08-129A	02
08	MT	YELLOWSTONE COUNTY	3001420750A	09-JUN-2000	00-08-225A	02
08	MT	YELLOWSTONE COUNTY	3001421030B	22-MAR-2000	99-08-452V	19
08	ND	BARNES COUNTY	3803390355A	24-MAY-2000	00-08-079A	02
08	ND	BARNES COUNTY	3803390250A	12-MAY-2000	00-08-198A	02
08	ND	BARNES COUNTY	3803390355A	26-JUN-2000	00-08-282A	02
08	ND	BATHGATE, CITY OF	3800800001A	16-MAY-2000	00-08-178A	01
08	ND	BISMARCK, CITY OF	3801490025A	02-MAY-2000	00-08-169A	01
08	ND	BISMARCK, CITY OF	3801490025A	09-JUN-2000	00-08-197A	01
08	ND	BISMARCK, CITY OF	3801490015A	14-JUN-2000	00-08-234A	02
08	ND	BOWMAN, CITY OF	3800120001B	21-MAR-2000	00-08-075A	01
08	ND	BOWMAN, CITY OF	3800120001B	14-JUN-2000	00-08-125A	02
08	ND	FARGO, CITY OF	3853640030D	07-JAN-2000	00-08-031A	01
08	ND	FARGO, CITY OF	3853640010F	04-MAY-2000	00-08-183A	01
08	ND	GRAND FORKS COUNTY	3800330016B	03-MAY-2000	00-08-153A	02
08	ND	GRAND FORKS, CITY OF	3853650010D	10-FEB-2000	00-08-089A	02
08	ND	GRAND FORKS, CITY OF	3853650010D	09-MAR-2000	00-08-119A	02
08	ND	LISBON, CITY OF	3800910001B	09-MAR-2000	00-08-071A	02
08	ND	MANDAN, CITY OF	3800720020B	31-MAY-2000	00-08-115A	02
08	ND	MCHENRY COUNTY	38049C0325D	17-MAY-2000	00-08-196P	06
08	ND	MCHENRY COUNTY	38049C0450D	17-MAY-2000	00-08-196P	06
08	ND	MCHENRY COUNTY	38049C0500D	17-MAY-2000	00-08-196P	06
08	ND	MCHENRY COUNTY	38049C0625D	17-MAY-2000	00-08-196P	06
08	ND	MCHENRY COUNTY	38049C0675D	17-MAY-2000	00-08-196P	06
08	ND	MCHENRY COUNTY	38049C0775D	17-MAY-2000	00-08-196P	06
08	ND	MCHENRY COUNTY	38049C0780D	17-MAY-2000	00-08-196P	06
08	ND	MCHENRY COUNTY	38049C0850D	17-MAY-2000	00-08-196P	06
08	ND	MCHENRY COUNTY	38049C0875D	17-MAY-2000	00-08-196P	06
08	ND	MCHENRY COUNTY	38049C0975D	17-MAY-2000	00-08-196P	06
08	ND	MCHENRY COUNTY	38049C1000D	17-MAY-2000	00-08-196P	06
08	ND	MCHENRY COUNTY	38049C1025D	17-MAY-2000	00-08-196P	06
08	ND	MCHENRY COUNTY	38049C1050D	17-MAY-2000	00-08-196P	06
08	ND	MCHENRY COUNTY	38049C1100D	17-MAY-2000	00-08-196P	06
08	ND	MCHENRY COUNTY	38049CIND0	17-MAY-2000	00-08-196P	06
08	ND	MINOT, CITY OF	38101C0777D	24-FEB-2000	00-08-120A	02
08	ND	MINOT, CITY OF	38101C0777D	20-JAN-2000	97-08-321V	19
08	ND	MINOT, CITY OF	38101C0783D	20-JAN-2000	97-08-321V	19
08	ND	MINOT, CITY OF	38101C0787D	20-JAN-2000	97-08-321V	19
08	ND	PLEASANT, TOWNSHIP OF	3802630025A	18-FEB-2000	00-08-097A	01
08	ND	PLEASANT, TOWNSHIP OF	3802630025A	29-MAR-2000	00-08-109A	02
08	ND	PLEASANT, TOWNSHIP OF	3802630025A	14-JUN-2000	00-08-236A	02
08	ND	STANLEY, TOWNSHIP OF	3802580005B	08-MAR-2000	00-08-123A	02
08	ND	WALSH COUNTY	3801350008B	30-MAR-2000	00-08-086A	02
08	ND	WARD COUNTY	38101C0757C	15-MAR-2000	00-08-138A	02
08	ND	WARD COUNTY	38101C0505D	17-MAY-2000	00-08-195P	06
08	ND	WARD COUNTY	38101C0540D	17-MAY-2000	00-08-195P	06
08	ND	WARD COUNTY	38101C0545D	17-MAY-2000	00-08-195P	06
08	ND	WARD COUNTY	38101C0810D	17-MAY-2000	00-08-195P	06
08	ND	WARD COUNTY	38101C0830D	17-MAY-2000	00-08-195P	06
08	ND	WARD COUNTY	38101CIND0	17-MAY-2000	00-08-195P	06
08	ND	WARD COUNTY	38101C0565D	20-JAN-2000	97-08-321V	19
08	ND	WARD COUNTY	38101C0566D	20-JAN-2000	97-08-321V	19
08	ND	WARD COUNTY	38101C0803D	20-JAN-2000	97-08-321V	19
08	ND	WARD COUNTY	38101C0815D	20-JAN-2000	97-08-321V	19
08	ND	WARD COUNTY	38101C0820D	20-JAN-2000	97-08-321V	19
08	ND	WARD COUNTY	38101C1010D	20-JAN-2000	97-08-321V	19
08	ND	WEST FARGO, CITY OF	3800240005E	17-MAY-2000	00-08-103A	02
08	SD	ELK POINT, CITY OF	460242C	22-MAY-2000	00-08-206A	01

Region	State	Community	Map panel	Determination date	Case No.	Type
08	SD	LINCOLN COUNTY	4602770001B	24-FEB-2000	00-08-098A	02
08	SD	PENNINGTON COUNTY	4600641120B	27-JAN-2000	00-08-024A	02
08	SD	RAPID CITY, CITY OF	4654200004F	18-JAN-2000	00-08-060A	01
08	SD	RAPID CITY, CITY OF	4654200003F	30-MAR-2000	00-08-145A	02
08	SD	RAPID CITY, CITY OF	4654200003F	18-APR-2000	00-08-166A	02
08	SD	RAPID CITY, CITY OF	4654200003F	28-JUN-2000	00-08-245A	02
08	SD	ROBERTS COUNTY	4602860007B	08-MAY-2000	00-08-162A	01
08	SD	SIOUX FALLS, CITY OF	4600570065B	12-JAN-2000	00-08-081A	01
08	SD	SIOUX FALLS, CITY OF	4600600015C	28-MAR-2000	00-08-157A	01
08	SD	SIOUX FALLS, CITY OF	4600570065B	25-MAY-2000	00-08-193A	01
08	SD	SIOUX FALLS, CITY OF	4600600015C	16-JUN-2000	00-08-211A	02
08	SD	SIOUX FALLS, CITY OF	4600570110B	16-JUN-2000	00-08-249A	01
08	SD	SPEARFISH, CITY OF	4600460004D	09-MAY-2000	00-08-080A	02
08	SD	SPEARFISH, CITY OF	4600460001D	09-MAR-2000	00-08-116A	01
08	SD	UNION COUNTY	460242C	08-FEB-2000	00-08-092A	01
08	UT	AURORA, CITY OF	4901210006B	17-MAY-2000	00-08-118A	02
08	UT	AURORA, CITY OF	4901230001C	17-MAY-2000	00-08-118A	02
08	UT	AURORA, CITY OF	4901230001C	31-MAR-2000	00-08-149A	02
08	UT	AURORA, CITY OF	4901230001C	16-JUN-2000	00-08-233A	02
08	UT	CACHE COUNTY	4900120006B	12-APR-2000	00-08-163A	02
08	UT	CACHE COUNTY	4900120009B	02-MAY-2000	00-08-172A	02
08	UT	GARFIELD COUNTY	4900650450B	18-JAN-2000	00-08-051A	02
08	UT	GARFIELD COUNTY	4900650450B	25-APR-2000	00-08-100A	02
08	UT	GARFIELD COUNTY	4900650450B	04-MAY-2000	00-08-128A	02
08	UT	HARRISVILLE, CITY OF	4902080001A	19-JAN-2000	00-08-033A	02
08	UT	MORGAN COUNTY	4900920105B	13-APR-2000	00-08-032P	06
08	UT	MOUNT PLEASANT, CITY OF	4902130005A	15-MAR-2000	00-08-112P	06
08	UT	MOUNT PLEASANT, CITY OF	4902130005A	18-JAN-2000	99-08-083P	06
08	UT	MURRAY, CITY OF	4901030001C	21-JAN-2000	99-08-409A	01
08	UT	OGDEN, CITY OF	4901890006B	18-JAN-2000	00-08-065A	02
08	UT	PROVO, CITY OF	4901590002D	22-JUN-2000	99-08-433P	05
08	UT	RIVERTON, CITY OF	4901040002C	09-MAY-2000	00-08-004P	06
08	UT	SALT LAKE CITY, CITY OF	4901050027A	26-APR-2000	00-08-101A	02
08	UT	SANDY CITY, CITY OF	4901060012C	04-MAY-2000	99-08-422P	06
08	UT	SANDY CITY, CITY OF	4901060016C	04-MAY-2000	99-08-422P	06
08	UT	SANPETE COUNTY	4901110007B	15-MAR-2000	00-08-112P	06
08	UT	SANPETE COUNTY	4901110008B	15-MAR-2000	00-08-112P	06
08	UT	SANPETE COUNTY	4901110011B	28-MAR-2000	00-08-151A	02
08	UT	SANPETE COUNTY	4901110007B	18-JAN-2000	99-08-083P	06
08	UT	SANPETE COUNTY	4901110008B	18-JAN-2000	99-08-083P	06
08	UT	SANTA CLARA, TOWN OF	4901780005B	26-MAY-2000	00-08-142A	02
08	UT	SOUTH JORDAN, CITY OF	4901070008C	09-MAY-2000	00-08-004P	06
08	UT	TOOELE, CITY OF	4901450005A	30-MAY-2000	00-08-131A	01
08	UT	UINTAH COUNTY	4901470010C	26-MAY-2000	00-08-132A	02
08	UT	VERNAL, CITY OF	4901490005A	08-MAR-2000	00-08-117A	02
08	UT	WASHINGTON,CITY OF	4901820015C	31-MAR-2000	00-08-107A	02
08	UT	WEST VALLEY CITY, CITY OF	4902450025C	22-FEB-2000	00-08-076A	02
08	WY	CASPER, CITY OF	5600370015C	04-MAY-2000	00-08-167A	02
08	WY	CHEYENNE, CITY OF	5600300005E	16-JUN-2000	00-08-212A	02
08	WY	SHERIDAN COUNTY	5600470019C	14-JUN-2000	00-08-209A	02
08	WY	SHERIDAN, CITY OF	5600440005C	06-APR-2000	00-08-156A	02
09	AZ	AVONDALE, CITY OF	04013C2080G	23-FEB-2000	00-09-009P	05
09	AZ	AVONDALE, CITY OF	04013C2085E	23-FEB-2000	00-09-009P	05
09	AZ	AVONDALE, CITY OF	04013C2090F	23-FEB-2000	00-09-009P	05
09	AZ	AVONDALE, CITY OF	04013C2095D	23-FEB-2000	00-09-009P	05
09	AZ	AVONDALE, CITY OF	04013C2090F	20-APR-2000	99-09-706P	05
09	AZ	AVONDALE, CITY OF	04013C2095D	20-APR-2000	99-09-706P	05
09	AZ	AVONDALE, CITY OF	04013C2555D	20-APR-2000	99-09-706P	05
09	AZ	BUCKEYE, TOWN OF	04013C2045F	20-APR-2000	99-09-706P	05
09	AZ	BUCKEYE, TOWN OF	04013C2065F	20-APR-2000	99-09-706P	05
09	AZ	BUCKEYE, TOWN OF	04013C2485F	20-APR-2000	99-09-706P	05
09	AZ	BUCKEYE, TOWN OF	04013C2505F	20-APR-2000	99-09-706P	05
09	AZ	BUCKEYE, TOWN OF	04013C2510E	20-APR-2000	99-09-706P	05
09	AZ	BUCKEYE, TOWN OF	04013C2530E	20-APR-2000	99-09-706P	05
09	AZ	CHANDLER, CITY OF	04013C3035F	25-MAY-2000	00-09-317A	02
09	AZ	COCHISE COUNTY	0400120065B	15-FEB-2000	98-09-165P	05
09	AZ	COCHISE COUNTY	0400120070B	15-FEB-2000	98-09-165P	05
09	AZ	COCHISE COUNTY	0400120235B	15-FEB-2000	98-09-165P	05
09	AZ	COCHISE COUNTY	0400120245B	15-FEB-2000	98-09-165P	05
09	AZ	COCHISE COUNTY	0400120255B	15-FEB-2000	98-09-165P	05
09	AZ	COCHISE COUNTY	0400120265B	15-FEB-2000	98-09-165P	05
09	AZ	COCHISE COUNTY	0400120425B	15-FEB-2000	98-09-165P	05
09	AZ	COCHISE COUNTY	0400120450B	15-FEB-2000	98-09-165P	05

Region	State	Community	Map panel	Determination date	Case No.	Type
09	AZ	COCHISE COUNTY	0400121261B	14-FEB-2000	99-09-231P	06
09	AZ	COCHISE COUNTY	0400121275C	14-FEB-2000	99-09-231P	06
09	AZ	DOUGLAS, CITY OF	0400150001B	02-MAR-2000	00-09-430A	02
09	AZ	GILA COUNTY	0400280245B	05-JUN-2000	00-09-465P	08
09	AZ	GILA COUNTY	0400280435B	05-JUN-2000	00-09-465P	08
09	AZ	GILA COUNTY	0400280455B	05-JUN-2000	00-09-465P	08
09	AZ	GILBERT, TOWN OF	04013C2660E	22-FEB-2000	00-09-192A	01
09	AZ	GILBERT, TOWN OF	04013C2660E	16-MAY-2000	00-09-252A	01
09	AZ	GILBERT, TOWN OF	04013C2190E	29-MAR-2000	00-09-492A	01
09	AZ	GILBERT, TOWN OF	04013C2655E	29-MAR-2000	00-09-492A	01
09	AZ	GILBERT, TOWN OF	04013C2660E	14-JUN-2000	00-09-775A	01
09	AZ	GILBERT, TOWN OF	04013C2680F	29-FEB-2000	99-09-1026A	01
09	AZ	GLENDALE, CITY OF	04013C1595F	02-MAY-2000	00-09-200P	06
09	AZ	GLENDALE, CITY OF	04013C1615H	02-MAY-2000	00-09-200P	06
09	AZ	GOODYEAR, CITY OF	04013C2065F	20-APR-2000	99-09-706P	05
09	AZ	GOODYEAR, CITY OF	04013C2070F	20-APR-2000	99-09-706P	05
09	AZ	GOODYEAR, CITY OF	04013C2090F	20-APR-2000	99-09-706P	05
09	AZ	GOODYEAR, CITY OF	04013C2530E	20-APR-2000	99-09-706P	05
09	AZ	GOODYEAR, CITY OF	04013C2550E	20-APR-2000	99-09-706P	05
09	AZ	GRAHAM COUNTY	0400320925B	15-FEB-2000	98-09-165P	05
09	AZ	GRAHAM COUNTY	0400320950B	15-FEB-2000	98-09-165P	05
09	AZ	GRAHAM COUNTY	0400321075B	15-FEB-2000	98-09-165P	05
09	AZ	GRAHAM COUNTY	0400321100B	15-FEB-2000	98-09-165P	05
09	AZ	MARICOPA COUNTY	04013C2085E	23-FEB-2000	00-09-009P	05
09	AZ	MARICOPA COUNTY	04013C2090F	23-FEB-2000	00-09-009P	05
09	AZ	MARICOPA COUNTY	04013C2095D	23-FEB-2000	00-09-009P	05
09	AZ	MARICOPA COUNTY	04013C2105D	23-FEB-2000	00-09-009P	05
09	AZ	MARICOPA COUNTY	04013C2120E	23-FEB-2000	00-09-009P	05
09	AZ	MARICOPA COUNTY	04013C0365E	12-APR-2000	00-09-156P	06
09	AZ	MARICOPA COUNTY	04013C0370E	12-APR-2000	00-09-156P	06
09	AZ	MARICOPA COUNTY	04013C0755E	12-APR-2000	00-09-156P	06
09	AZ	MARICOPA COUNTY	04013C1595F	02-MAY-2000	00-09-200P	06
09	AZ	MARICOPA COUNTY	04013C1615H	02-MAY-2000	00-09-200P	06
09	AZ	MARICOPA COUNTY	04013C0255F	26-APR-2000	00-09-547A	17
09	AZ	MARICOPA COUNTY	04013C0370E	17-FEB-2000	99-09-423P	05
09	AZ	MARICOPA COUNTY	04013C0375E	17-FEB-2000	99-09-423P	05
09	AZ	MARICOPA COUNTY	04013C0755E	17-FEB-2000	99-09-423P	05
09	AZ	MARICOPA COUNTY	04013C0760E	17-FEB-2000	99-09-423P	05
09	AZ	MARICOPA COUNTY	04013C1720E	20-APR-2000	99-09-706P	05
09	AZ	MARICOPA COUNTY	04013C1750E	20-APR-2000	99-09-706P	05
09	AZ	MARICOPA COUNTY	04013C2045F	20-APR-2000	99-09-706P	05
09	AZ	MARICOPA COUNTY	04013C2065F	20-APR-2000	99-09-706P	05
09	AZ	MARICOPA COUNTY	04013C2070F	20-APR-2000	99-09-706P	05
09	AZ	MARICOPA COUNTY	04013C2090F	20-APR-2000	99-09-706P	05
09	AZ	MARICOPA COUNTY	04013C2095D	20-APR-2000	99-09-706P	05
09	AZ	MARICOPA COUNTY	04013C2115E	20-APR-2000	99-09-706P	05
09	AZ	MARICOPA COUNTY	04013C2120E	20-APR-2000	99-09-706P	05
09	AZ	MARICOPA COUNTY	04013C2140E	20-APR-2000	99-09-706P	05
09	AZ	MARICOPA COUNTY	04013C2160D	20-APR-2000	99-09-706P	05
09	AZ	MARICOPA COUNTY	04013C2170E	20-APR-2000	99-09-706P	05
09	AZ	MARICOPA COUNTY	04013C2180E	20-APR-2000	99-09-706P	05
09	AZ	MARICOPA COUNTY	04013C2185E	20-APR-2000	99-09-706P	05
09	AZ	MARICOPA COUNTY	04013C2190E	20-APR-2000	99-09-706P	05
09	AZ	MARICOPA COUNTY	04013C2205E	20-APR-2000	99-09-706P	05
09	AZ	MARICOPA COUNTY	04013C2485F	20-APR-2000	99-09-706P	05
09	AZ	MARICOPA COUNTY	04013C2505F	20-APR-2000	99-09-706P	05
09	AZ	MARICOPA COUNTY	04013C2510E	20-APR-2000	99-09-706P	05
09	AZ	MARICOPA COUNTY	04013C2530E	20-APR-2000	99-09-706P	05
09	AZ	MARICOPA COUNTY	04013C2555D	20-APR-2000	99-09-706P	05
09	AZ	MARICOPA COUNTY	04013C2560D	20-APR-2000	99-09-706P	05
09	AZ	MARICOPA COUNTY	04013C1300E	29-FEB-2000	99-09-939P	05
09	AZ	MESA, CITY OF	04013C2195E	17-APR-2000	00-09-259A	02
09	AZ	MESA, CITY OF	04013C2215F	13-MAR-2000	00-09-395A	02
09	AZ	MESA, CITY OF	04013C2195E	14-JUN-2000	00-09-656A	02
09	AZ	MESA, CITY OF	04013C2160D	20-APR-2000	99-09-706P	05
09	AZ	MESA, CITY OF	04013C2170E	20-APR-2000	99-09-706P	05
09	AZ	MESA, CITY OF	04013C2180E	20-APR-2000	99-09-706P	05
09	AZ	MESA, CITY OF	04013C2185E	20-APR-2000	99-09-706P	05
09	AZ	MESA, CITY OF	04013C2190E	20-APR-2000	99-09-706P	05
09	AZ	MESA, CITY OF	04013C2205E	20-APR-2000	99-09-706P	05
09	AZ	MOHAVE COUNTY	0400583110B	20-APR-2000	00-09-541A	02
09	AZ	NAVAJO COUNTY	0400661700B	20-APR-2000	99-09-1226P	05
09	AZ	PAYSON, TOWN OF	0401070003A	18-MAY-2000	00-09-150P	05

Region	State	Community	Map panel	Determination date	Case No.	Type
09	AZ	PAYSON, TOWN OF	0401070004A	18-MAY-2000	00-09-150P	05
09	AZ	PHOENIX, CITY OF	04013C2105D	23-FEB-2000	00-09-009P	05
09	AZ	PHOENIX, CITY OF	04013C2115E	23-FEB-2000	00-09-009P	05
09	AZ	PHOENIX, CITY OF	04013C2120E	23-FEB-2000	00-09-009P	05
09	AZ	PHOENIX, CITY OF	04013C1690E	21-JAN-2000	00-09-220A	02
09	AZ	PHOENIX, CITY OF	04013C1690E	19-APR-2000	00-09-315A	02
09	AZ	PHOENIX, CITY OF	04013C2630E	02-JUN-2000	00-09-345P	06
09	AZ	PHOENIX, CITY OF	04013C1665G	07-MAR-2000	00-09-355A	02
09	AZ	PHOENIX, CITY OF	04013C2095D	20-APR-2000	99-09-706P	05
09	AZ	PHOENIX, CITY OF	04013C2115E	20-APR-2000	99-09-706P	05
09	AZ	PHOENIX, CITY OF	04013C2120E	20-APR-2000	99-09-706P	05
09	AZ	PHOENIX, CITY OF	04013C2140E	20-APR-2000	99-09-706P	05
09	AZ	PHOENIX, CITY OF	04013C2145F	20-APR-2000	99-09-706P	05
09	AZ	PHOENIX, CITY OF	04013C2165F	20-APR-2000	99-09-706P	05
09	AZ	PIMA COUNTY	04019C1616K	24-MAR-2000	00-09-010A	02
09	AZ	PIMA COUNTY	04019C1635K	13-JAN-2000	00-09-103A	02
09	AZ	PIMA COUNTY	04019C2220K	31-MAR-2000	00-09-152A	01
09	AZ	PIMA COUNTY	04019C2252K	21-JAN-2000	00-09-256A	02
09	AZ	PIMA COUNTY	04019C1670K	28-FEB-2000	00-09-334A	02
09	AZ	PIMA COUNTY	04019C1015K	26-APR-2000	00-09-346P	06
09	AZ	PIMA COUNTY	04019C1605K	26-APR-2000	00-09-346P	06
09	AZ	PIMA COUNTY	04019C1035K	29-MAR-2000	00-09-442A	02
09	AZ	PIMA COUNTY	04019C2225K	06-JUN-2000	00-09-482P	06
09	AZ	PIMA COUNTY	04019C2825K	06-JUN-2000	00-09-482P	06
09	AZ	PIMA COUNTY	04019C1610K	17-APR-2000	00-09-526A	02
09	AZ	PIMA COUNTY	04019C1610K	05-JUN-2000	00-09-675A	02
09	AZ	PIMA COUNTY	04019C1665K	09-JUN-2000	00-09-695A	02
09	AZ	PIMA COUNTY	04019C2810K	14-JUN-2000	00-09-715A	02
09	AZ	PIMA COUNTY	04019C2241K	16-JUN-2000	99-09-1084P	05
09	AZ	PIMA COUNTY	04019C2243K	16-JUN-2000	99-09-1084P	05
09	AZ	PIMA COUNTY	04019C2245K	16-JUN-2000	99-09-1084P	05
09	AZ	PIMA COUNTY	04019C2265K	16-JUN-2000	99-09-1084P	05
09	AZ	PIMA COUNTY	04019C2855K	16-JUN-2000	99-09-1084P	05
09	AZ	PIMA COUNTY	04019C2810K	11-JAN-2000	99-09-1177A	02
09	AZ	PIMA COUNTY	04019C1610K	06-JAN-2000	99-09-1272A	02
09	AZ	PIMA COUNTY	04019C1618K	26-APR-2000	99-09-434P	05
09	AZ	PIMA COUNTY	04019C2210K	26-APR-2000	99-09-434P	05
09	AZ	QUEEN CREEK, TOWN OF	04013C2695F	21-JUN-2000	00-09-145P	06
09	AZ	QUEEN CREEK, TOWN OF	04013C3075F	21-JUN-2000	00-09-145P	06
09	AZ	QUEEN CREEK, TOWN OF	04013C3075F	04-MAY-2000	00-09-404A	01
09	AZ	SANTA CRUZ COUNTY	0400900020A	05-APR-2000	99-09-678P	06
09	AZ	SCOTTSDALE, CITY OF	04013C2160D	13-MAR-2000	00-09-378A	02
09	AZ	SCOTTSDALE, CITY OF	04013C2160D	24-APR-2000	00-09-530A	02
09	AZ	SCOTTSDALE, CITY OF	04013C2160D	09-JUN-2000	00-09-688A	02
09	AZ	TEMPE, CITY OF	04013C2160D	20-APR-2000	99-09-706P	05
09	AZ	TEMPE, CITY OF	04013C2165F	20-APR-2000	99-09-706P	05
09	AZ	TEMPE, CITY OF	04013C2170E	20-APR-2000	99-09-706P	05
09	AZ	TOLLESON, CITY OF	04013C2085E	23-FEB-2000	00-09-009P	05
09	AZ	TOLLESON, CITY OF	04013C2095D	23-FEB-2000	00-09-009P	05
09	AZ	TOLLESON, CITY OF	04013C2105D	23-FEB-2000	00-09-009P	05
09	AZ	TUCSON, CITY OF	04019C2227K	20-JAN-2000	00-09-202A	02
09	AZ	TUCSON, CITY OF	04019C2254K	08-FEB-2000	00-09-249A	02
09	AZ	TUCSON, CITY OF	04019C2210K	28-JUN-2000	00-09-263P	06
09	AZ	TUCSON, CITY OF	04019C1639K	14-FEB-2000	00-09-285A	02
09	AZ	TUCSON, CITY OF	04019C2227K	20-JAN-2000	00-09-287P	06
09	AZ	TUCSON, CITY OF	04019C2253K	22-FEB-2000	00-09-296A	02
09	AZ	TUCSON, CITY OF	04019C2253K	22-FEB-2000	00-09-304A	02
09	AZ	TUCSON, CITY OF	04019C2251K	26-JUN-2000	00-09-506A	02
09	AZ	TUCSON, CITY OF	04019C2256K	06-JUN-2000	00-09-619A	02
09	AZ	TUCSON, CITY OF	04019C2232K	24-MAY-2000	00-09-665A	02
09	AZ	TUCSON, CITY OF	04019C2232K	28-JUN-2000	00-09-768A	02
09	AZ	TUCSON, CITY OF	04019C2237K	16-JUN-2000	99-09-1084P	05
09	AZ	TUCSON, CITY OF	04019C2241K	16-JUN-2000	99-09-1084P	05
09	AZ	TUCSON, CITY OF	04019C2245K	16-JUN-2000	99-09-1084P	05
09	AZ	TUCSON, CITY OF	04019C2265K	16-JUN-2000	99-09-1084P	05
09	AZ	TUCSON, CITY OF	04019C2855K	16-JUN-2000	99-09-1084P	05
09	AZ	TUCSON, CITY OF	04019C2875K	16-JUN-2000	99-09-1084P	05
09	AZ	TUCSON, CITY OF	04019C2232K	07-JAN-2000	99-09-1215A	02
09	AZ	TUCSON, CITY OF	04019C1643K	31-MAY-2000	99-09-719P	05
09	AZ	TUCSON, CITY OF	04019C1644K	31-MAY-2000	99-09-719P	05
09	AZ	WILLCOX, CITY OF	0400180001C	15-FEB-2000	98-09-165P	05
09	AZ	YAVAPAI COUNTY	0400930860B	16-FEB-2000	00-09-229A	02
09	AZ	YAVAPAI COUNTY	0400930880B	26-JUN-2000	00-09-648A	01

Region	State	Community	Map panel	Determination date	Case No.	Type
09	AZ	YAVAPAI COUNTY	0400930390B	26-JAN-2000	99-09-192P	05
09	AZ	YAVAPAI COUNTY	0400930395B	26-JAN-2000	99-09-192P	05
09	AZ	YAVAPAI COUNTY	0400930580B	26-JAN-2000	99-09-192P	05
09	AZ	YAVAPAI COUNTY	0400930585D	26-JAN-2000	99-09-192P	05
09	AZ	YAVAPAI COUNTY	0400930595D	26-JAN-2000	99-09-192P	05
09	AZ	YAVAPAI COUNTY	0400930605C	26-JAN-2000	99-09-192P	05
09	AZ	YAVAPAI COUNTY	0400930615C	26-JAN-2000	99-09-192P	05
09	AZ	YUMA COUNTY	0400990885D	30-JUN-2000	00-09-667P	06
09	CA	ALAMEDA COUNTY	0600010090D	10-FEB-2000	99-09-1306V	19
09	CA	ANAHEIM, CITY OF	06059C0014F	14-JUN-2000	00-09-153P	06
09	CA	ANAHEIM, CITY OF	06059C0015F	14-JUN-2000	00-09-153P	06
09	CA	ANAHEIM, CITY OF	06059C0021F	14-JUN-2000	00-09-153P	06
09	CA	ANAHEIM, CITY OF	06059C0021F	13-JAN-2000	00-09-278P	05
09	CA	ANAHEIM, CITY OF	06059C0014F	14-JUN-2000	00-09-469P	06
09	CA	ANAHEIM, CITY OF	06059C0015F	14-JUN-2000	00-09-469P	06
09	CA	ANAHEIM, CITY OF	06059C0021F	14-JUN-2000	00-09-469P	06
09	CA	ANDERSON, CITY OF	0603590001C	29-FEB-2000	00-09-151A	02
09	CA	ANDERSON, CITY OF	0603590001C	20-APR-2000	00-09-509A	01
09	CA	APPLE VALLEY, CITY OF	06071C5840F	31-MAY-2000	00-09-668A	02
09	CA	BRENTWOOD, CITY OF	0600250365B	18-JAN-2000	00-09-060A	01
09	CA	BUTTE COUNTY	06007C0320C	29-FEB-2000	00-09-340A	02
09	CA	BUTTE COUNTY	06007C0310C	07-APR-2000	00-09-446A	02
09	CA	BUTTE COUNTY	06007C0510D	24-MAY-2000	00-09-642A	02
09	CA	CARSON, CITY OF	0601070005A	25-FEB-2000	00-09-177P	05
09	CA	CHULA VISTA, CITY OF	06073C2152F	07-APR-2000	00-09-475A	01
09	CA	CHULA VISTA, CITY OF	06073C1938F	15-FEB-2000	99-09-1237P	05
09	CA	CLOVERDALE, CITY OF	0603760001C	13-JAN-2000	00-09-212A	02
09	CA	COMPTON, CITY OF	0601110005A	25-FEB-2000	00-09-177P	05
09	CA	CONCORD, CITY OF	0650220009B	07-MAR-2000	00-09-354A	02
09	CA	CONTRA COSTA COUNTY	0600250355B	27-MAR-2000	00-09-191A	01
09	CA	CONTRA COSTA COUNTY	0600250435C	24-MAY-2000	00-09-623A	01
09	CA	CORONA, CITY OF	0602500005F	05-APR-2000	00-09-374A	02
09	CA	CORONA, CITY OF	0602500005F	13-MAR-2000	99-09-1213P	05
09	CA	CORTE MADERA, TOWN OF	0650230001B	08-FEB-2000	00-09-292A	02
09	CA	COSTA MESA, CITY OF	06059C0037F	14-JUN-2000	00-09-153P	06
09	CA	COSTA MESA, CITY OF	06059C0046F	14-JUN-2000	00-09-153P	06
09	CA	COSTA MESA, CITY OF	06059C0037F	14-JUN-2000	00-09-351P	06
09	CA	COSTA MESA, CITY OF	06059C0046F	14-JUN-2000	00-09-351P	06
09	CA	COSTA MESA, CITY OF	06059C0037F	14-JUN-2000	00-09-357P	06
09	CA	COSTA MESA, CITY OF	06059C0046F	14-JUN-2000	00-09-357P	06
09	CA	COTATI, CITY OF	0603770001D	03-FEB-2000	00-09-199A	01
09	CA	COTATI, CITY OF	0603770001D	20-JAN-2000	00-09-201V	19
09	CA	COTATI, CITY OF	0603770001D	04-MAY-2000	00-09-251A	01
09	CA	DAVIS, CITY OF	0604230575C	03-APR-2000	00-09-457A	01
09	CA	DAVIS, CITY OF	0604240002B	13-APR-2000	00-09-504A	02
09	CA	DEL NORTE COUNTY	0650250100C	21-JUN-2000	00-09-721A	02
09	CA	DINUBA, CITY OF	0604030001B	09-FEB-2000	00-09-234A	01
09	CA	DINUBA, CITY OF	0604030001B	22-MAY-2000	00-09-653A	01
09	CA	DINUBA, CITY OF	0650660280B	26-JUN-2000	00-09-723A	01
09	CA	EAST PALO ALTO, CITY OF	0607080001B	04-MAY-2000	00-09-337A	02
09	CA	EAST PALO ALTO, CITY OF	0607080001B	28-MAR-2000	00-09-425A	02
09	CA	EAST PALO ALTO, CITY OF	0607080001B	26-MAY-2000	00-09-683A	02
09	CA	EAST PALO ALTO, CITY OF	0607080001B	28-JUN-2000	00-09-772A	02
09	CA	EAST PALO ALTO, CITY OF	0607080001B	28-JUN-2000	00-09-777A	02
09	CA	EAST PALO ALTO, CITY OF	0607080001B	28-JUN-2000	00-09-779A	02
09	CA	EL DORADO COUNTY	0600400725C	22-MAY-2000	00-09-466A	02
09	CA	ESCONDIDO, CITY OF	06073C0814F	26-MAY-2000	00-09-652A	01
09	CA	ESCONDIDO, CITY OF	06073C1079F	31-JAN-2000	99-09-888P	05
09	CA	ESCONDIDO, CITY OF	06073C1083F	31-JAN-2000	99-09-888P	05
09	CA	FAIRFIELD, CITY OF	0603700010C	28-APR-2000	00-09-419A	01
09	CA	FAIRFIELD, CITY OF	0603700010C	09-JUN-2000	00-09-708A	01
09	CA	FAIRFIELD, CITY OF	0603700010C	28-JUN-2000	00-09-767A	01
09	CA	FOLSOM, CITY OF	0602630001B	08-JUN-2000	00-09-323P	05
09	CA	FOUNTAIN VALLEY, CITY OF	06059C0028F	14-JUN-2000	00-09-153P	06
09	CA	FOUNTAIN VALLEY, CITY OF	06059C0036F	14-JUN-2000	00-09-153P	06
09	CA	FOUNTAIN VALLEY, CITY OF	06059C0037F	14-JUN-2000	00-09-153P	06
09	CA	FOUNTAIN VALLEY, CITY OF	06059C0028F	14-JUN-2000	00-09-154P	06
09	CA	FOUNTAIN VALLEY, CITY OF	06059C0036F	14-JUN-2000	00-09-154P	06
09	CA	FOUNTAIN VALLEY, CITY OF	06059C0037F	14-JUN-2000	00-09-154P	06
09	CA	FOUNTAIN VALLEY, CITY OF	06059C0028F	14-JUN-2000	00-09-449P	06
09	CA	FOUNTAIN VALLEY, CITY OF	06059C0036F	14-JUN-2000	00-09-449P	06
09	CA	FOUNTAIN VALLEY, CITY OF	06059C0037F	14-JUN-2000	00-09-449P	06
09	CA	FREMONT, CITY OF	0650280029C	21-MAR-2000	00-09-436A	02

Region	State	Community	Map panel	Determination date	Case No.	Type
09	CA	FREMONT, CITY OF	0650280033C	25-APR-2000	00-09-528P	05
09	CA	FREMONT, CITY OF	0650280033C	31-MAY-2000	00-09-587A	02
09	CA	FREMONT, CITY OF	0650280029C	12-MAY-2000	00-09-600A	02
09	CA	FREMONT, CITY OF	0650280033C	12-MAY-2000	00-09-600A	02
09	CA	FREMONT, CITY OF	0650280010C	26-JUN-2000	00-09-719A	01
09	CA	FREMONT, CITY OF	0650280031B	21-JUN-2000	00-09-728A	02
09	CA	FREMONT, CITY OF	0650280030C	10-FEB-2000	99-09-1306V	19
09	CA	FREMONT, CITY OF	0650280045D	10-FEB-2000	99-09-1306V	19
09	CA	FREMONT, CITY OF	0650280046D	10-FEB-2000	99-09-1306V	19
09	CA	FRESNO COUNTY	0650290920B	08-FEB-2000	00-09-250A	02
09	CA	FRESNO COUNTY	0650290885C	16-JUN-2000	00-09-389A	01
09	CA	FRESNO, CITY OF	0650290590C	08-FEB-2000	00-09-262A	01
09	CA	FRESNO, CITY OF	0650290590C	07-MAR-2000	00-09-368A	01
09	CA	FRESNO, CITY OF	0650290590C	19-APR-2000	00-09-551A	01
09	CA	FRESNO, CITY OF	0650290590C	30-MAY-2000	00-09-663A	01
09	CA	GARDEN GROVE, CITY OF	06059C0020F	14-JUN-2000	00-09-153P	06
09	CA	GARDEN GROVE, CITY OF	06059C0021F	14-JUN-2000	00-09-153P	06
09	CA	GARDEN GROVE, CITY OF	06059C0028F	14-JUN-2000	00-09-153P	06
09	CA	GARDEN GROVE, CITY OF	06059C0029F	14-JUN-2000	00-09-153P	06
09	CA	GARDEN GROVE, CITY OF	06059C0020F	14-JUN-2000	00-09-449P	06
09	CA	GARDEN GROVE, CITY OF	06059C0021F	14-JUN-2000	00-09-449P	06
09	CA	GARDEN GROVE, CITY OF	06059C0028F	14-JUN-2000	00-09-449P	06
09	CA	GARDEN GROVE, CITY OF	06059C0029F	14-JUN-2000	00-09-449P	06
09	CA	GARDEN GROVE, CITY OF	06059C0020F	02-JUN-2000	00-09-670A	02
09	CA	GARDENA, CITY OF	0601190001A	25-FEB-2000	00-09-177P	05
09	CA	HAYWARD, CITY OF	0650330020E	02-JUN-2000	00-09-625A	01
09	CA	HAYWARD, CITY OF	0650330010E	10-FEB-2000	99-09-1306V	19
09	CA	HAYWARD, CITY OF	0650330011E	10-FEB-2000	99-09-1306V	19
09	CA	HAYWARD, CITY OF	0650330019E	10-FEB-2000	99-09-1306V	19
09	CA	HAYWARD, CITY OF	0650330020E	10-FEB-2000	99-09-1306V	19
09	CA	HEALDSBURG, CITY OF	0603780005C	26-JUN-2000	00-09-391P	06
09	CA	HEMET, CITY OF	0602530005D	08-MAR-2000	00-09-230A	01
09	CA	HEMET, CITY OF	0602530005D	08-MAR-2000	00-09-361A	01
09	CA	HEMET, CITY OF	0602530005D	18-FEB-2000	99-09-513P	05
09	CA	HUMBOLDT COUNTY	0600600615D	24-FEB-2000	00-09-327A	02
09	CA	HUNTINGTON BEACH, CITY OF	06059C0027F	14-JUN-2000	00-09-153P	06
09	CA	HUNTINGTON BEACH, CITY OF	06059C0036F	14-JUN-2000	00-09-153P	06
09	CA	HUNTINGTON BEACH, CITY OF	06059C0046F	14-JUN-2000	00-09-153P	06
09	CA	HUNTINGTON BEACH, CITY OF	06059C0054F	14-JUN-2000	00-09-153P	06
09	CA	HUNTINGTON BEACH, CITY OF	06059C0027F	14-JUN-2000	00-09-154P	06
09	CA	HUNTINGTON BEACH, CITY OF	06059C0036F	14-JUN-2000	00-09-154P	06
09	CA	HUNTINGTON BEACH, CITY OF	06059C0046F	14-JUN-2000	00-09-154P	06
09	CA	HUNTINGTON BEACH, CITY OF	06059C0054F	14-JUN-2000	00-09-154P	06
09	CA	HUNTINGTON BEACH, CITY OF	06059C0027F	14-JUN-2000	00-09-449P	06
09	CA	HUNTINGTON BEACH, CITY OF	06059C0036F	14-JUN-2000	00-09-449P	06
09	CA	HUNTINGTON BEACH, CITY OF	06059C0046F	14-JUN-2000	00-09-449P	06
09	CA	HUNTINGTON BEACH, CITY OF	06059C0054F	14-JUN-2000	00-09-449P	06
09	CA	IONE, CITY OF	0600160005D	07-JUN-2000	99-09-1307V	19
09	CA	IRVINE, CITY OF	06059C0048F	27-JAN-2000	00-09-142P	05
09	CA	IRVINE, CITY OF	06059C0057E	26-MAY-2000	99-09-350P	05
09	CA	LAGUNA HILLS, CITY OF	06059C0057E	26-MAY-2000	99-09-350P	05
09	CA	LAKE COUNTY	0600900510B	25-MAY-2000	00-09-577P	05
09	CA	LAKE COUNTY	0600900510B	13-MAR-2000	99-09-1129P	05
09	CA	LAKEWOOD, CITY OF	0601300005A	25-FEB-2000	00-09-177P	05
09	CA	LAKEWOOD, CITY OF	0601300005A	10-FEB-2000	00-09-267A	02
09	CA	LAKEWOOD, CITY OF	0601300005A	07-MAR-2000	00-09-369A	02
09	CA	LASSEN COUNTY	0600920175B	28-APR-2000	00-09-118A	02
09	CA	LEMON GROVE, CITY OF	06073C1907F	27-MAR-2000	00-09-052P	05
09	CA	LONG BEACH, CITY OF	0601360025C	10-MAR-2000	00-09-057A	01
09	CA	LONG BEACH, CITY OF	0601360005C	25-FEB-2000	00-09-177P	05
09	CA	LONG BEACH, CITY OF	0601360010C	25-FEB-2000	00-09-177P	05
09	CA	LONG BEACH, CITY OF	0601360020C	25-FEB-2000	00-09-177P	05
09	CA	LONG BEACH, CITY OF	0601360015C	15-MAR-2000	00-09-193A	02
09	CA	LONG BEACH, CITY OF	0601360015C	27-JAN-2000	00-09-233A	02
09	CA	LONG BEACH, CITY OF	0601360010C	01-MAR-2000	00-09-343A	02
09	CA	LONG BEACH, CITY OF	0601360025C	17-MAY-2000	00-09-612A	01
09	CA	LOOMIS, TOWN OF	06061C0416F	26-APR-2000	00-09-532A	01
09	CA	LOS ALTOS HILLS, TOWN OF	0603420001B	02-FEB-2000	00-09-061A	01
09	CA	LOS ANGELES COUNTY	0650431010C	25-FEB-2000	00-09-177P	05
09	CA	LOS ANGELES COUNTY	0650431030D	25-FEB-2000	00-09-177P	05
09	CA	LOS ANGELES COUNTY	0650430365B	11-MAY-2000	00-09-660A	01
09	CA	LOS ANGELES, CITY OF	0601370099D	25-FEB-2000	00-09-177P	05
09	CA	LOS ANGELES, CITY OF	0601370100D	25-FEB-2000	00-09-177P	05

Region	State	Community	Map panel	Determination date	Case No.	Type
09	CA	LOS ANGELES, CITY OF	0601370102D	25-FEB-2000	00-09-177P	05
09	CA	LOS ANGELES, CITY OF	0601370105D	25-FEB-2000	00-09-177P	05
09	CA	LOS ANGELES, CITY OF	0601370107E	25-FEB-2000	00-09-177P	05
09	CA	LOS ANGELES, CITY OF	0601370108E	25-FEB-2000	00-09-177P	05
09	CA	LOS ANGELES, CITY OF	0601370110E	25-FEB-2000	00-09-177P	05
09	CA	LOS ANGELES, CITY OF	0601370071C	22-MAR-2000	00-09-434A	02
09	CA	LOS ANGELES, CITY OF	0601370071C	21-MAR-2000	00-09-439A	02
09	CA	LOS ANGELES, CITY OF	0601370071C	21-MAR-2000	00-09-454A	02
09	CA	MADERA COUNTY	0601700750B	05-JAN-2000	00-09-031A	01
09	CA	MADERA COUNTY	0601700750B	02-FEB-2000	00-09-302A	01
09	CA	MADERA COUNTY	0601700605B	03-MAR-2000	00-09-338A	02
09	CA	MADERA COUNTY	0601700238C	08-MAR-2000	00-09-381A	02
09	CA	MADERA COUNTY	0601700225B	25-MAY-2000	00-09-636A	02
09	CA	MARIN COUNTY	0601730250A	19-APR-2000	00-09-301A	02
09	CA	MARIN COUNTY	0601730216A	24-MAR-2000	00-09-412A	02
09	CA	MARIN COUNTY	0601730216A	25-APR-2000	00-09-579A	02
09	CA	MARIN COUNTY	0601730266B	19-MAY-2000	00-09-621A	02
09	CA	MENDOCINO COUNTY	0601830794B	14-JUN-2000	00-09-677A	02
09	CA	MENDOCINO COUNTY	0601830792B	21-JUN-2000	00-09-753A	02
09	CA	MENLO PARK, CITY OF	0603210008D	03-MAR-2000	00-09-165A	01
09	CA	MENLO PARK, CITY OF	0603210007D	15-MAR-2000	00-09-394A	02
09	CA	MENLO PARK, CITY OF	0603210007D	11-MAY-2000	00-09-588A	02
09	CA	MERCED, CITY OF	06047C0440E	30-JUN-2000	00-09-740A	01
09	CA	MILPITAS, CITY OF	0603440003G	03-MAR-2000	00-09-238A	01
09	CA	MILPITAS, CITY OF	0603440004F	30-JUN-2000	00-09-463A	02
09	CA	MILPITAS, CITY OF	0603440003G	02-MAY-2000	00-09-561A	02
09	CA	MILPITAS, CITY OF	0603440001G	09-MAY-2000	00-09-581A	02
09	CA	MILPITAS, CITY OF	0603440003G	24-MAY-2000	00-09-634A	02
09	CA	MODESTO, CITY OF	0603870015C	16-MAR-2000	00-09-447P	06
09	CA	MONTEREY COUNTY	0601950015E	21-JUN-2000	00-09-712A	02
09	CA	NAPA COUNTY	060205IND0	14-JUN-2000	99-09-1245P	05
09	CA	NAPA, CITY OF	0602070010C	24-FEB-2000	00-09-112A	02
09	CA	NAPA, CITY OF	0602070005D	08-FEB-2000	00-09-291A	02
09	CA	NAPA, CITY OF	0602070010C	03-MAY-2000	00-09-467A	01
09	CA	NAPA, CITY OF	0602070010C	15-MAR-2000	00-09-470A	02
09	CA	NAPA, CITY OF	0602070005D	02-JUN-2000	00-09-644A	02
09	CA	NAPA, CITY OF	0602070010C	26-MAY-2000	00-09-669A	02
09	CA	NAPA, CITY OF	0602070005D	06-JUN-2000	00-09-676A	02
09	CA	NAPA, CITY OF	0602070005D	09-JUN-2000	00-09-703A	02
09	CA	NAPA, CITY OF	0602070005D	02-JUN-2000	00-09-711A	02
09	CA	NAPA, CITY OF	0602070005D	26-JUN-2000	00-09-756A	02
09	CA	NAPA, CITY OF	0602070005D	28-JAN-2000	97-09-1190V	19
09	CA	NEVADA COUNTY	0602100475B	20-APR-2000	00-09-516A	02
09	CA	NEWARK, CITY OF	0600090005F	06-JUN-2000	00-09-700A	02
09	CA	NEWPORT BEACH, CITY OF	06059C0046F	14-JUN-2000	00-09-153P	06
09	CA	NEWPORT BEACH, CITY OF	06059C0054F	14-JUN-2000	00-09-153P	06
09	CA	NEWPORT BEACH, CITY OF	06059C0046F	14-JUN-2000	00-09-351P	06
09	CA	NEWPORT BEACH, CITY OF	06059C0054F	14-JUN-2000	00-09-351P	06
09	CA	NEWPORT BEACH, CITY OF	06059C0046F	14-JUN-2000	00-09-357P	06
09	CA	NEWPORT BEACH, CITY OF	06059C0054F	14-JUN-2000	00-09-357P	06
09	CA	NORCO, CITY OF	0602560003B	13-MAR-2000	99-09-1213P	05
09	CA	NOVATO, CITY OF	0601780002C	24-MAY-2000	00-09-635A	02
09	CA	NOVATO, CITY OF	0601780004C	21-JAN-2000	99-09-1082A	01
09	CA	NOVATO, CITY OF	0601780005C	21-JAN-2000	99-09-1082A	01
09	CA	OAKLAND, CITY OF	0650480025B	26-JUN-2000	00-09-353A	02
09	CA	OCEANSIDE, CITY OF	06073C0752F	12-APR-2000	00-09-336A	01
09	CA	OCEANSIDE, CITY OF	06073C0752F	19-APR-2000	00-09-522A	01
09	CA	OCEANSIDE, CITY OF	06073C0751F	11-APR-2000	00-09-574V	19
09	CA	OCEANSIDE, CITY OF	06073C0752F	11-APR-2000	00-09-574V	19
09	CA	OCEANSIDE, CITY OF	06073C0754F	11-APR-2000	00-09-574V	19
09	CA	OCEANSIDE, CITY OF	06073C0752F	26-JUN-2000	00-09-730A	01
09	CA	ONTARIO, CITY OF	06071C8609F	16-FEB-2000	99-09-1126A	02
09	CA	ORANGE COUNTY	06059C0014F	14-JUN-2000	00-09-153P	06
09	CA	ORANGE COUNTY	06059C0021F	14-JUN-2000	00-09-153P	06
09	CA	ORANGE COUNTY	06059C0027F	14-JUN-2000	00-09-153P	06
09	CA	ORANGE COUNTY	06059C0028F	14-JUN-2000	00-09-153P	06
09	CA	ORANGE COUNTY	06059C0029F	14-JUN-2000	00-09-153P	06
09	CA	ORANGE COUNTY	06059C0035F	14-JUN-2000	00-09-153P	06
09	CA	ORANGE COUNTY	06059C0036F	14-JUN-2000	00-09-153P	06
09	CA	ORANGE COUNTY	06059C0037F	14-JUN-2000	00-09-153P	06
09	CA	ORANGE COUNTY	06059C0045F	14-JUN-2000	00-09-153P	06
09	CA	ORANGE COUNTY	06059C0046F	14-JUN-2000	00-09-153P	06
09	CA	ORANGE COUNTY	06059C0054F	14-JUN-2000	00-09-153P	06

Region	State	Community	Map panel	Determination date	Case No.	Type
09	CA	ORANGE COUNTY	06059C0014F	14-JUN-2000	00-09-357P	06
09	CA	ORANGE COUNTY	06059C0021F	14-JUN-2000	00-09-357P	06
09	CA	ORANGE COUNTY	06059C0027F	14-JUN-2000	00-09-357P	06
09	CA	ORANGE COUNTY	06059C0028F	14-JUN-2000	00-09-357P	06
09	CA	ORANGE COUNTY	06059C0029F	14-JUN-2000	00-09-357P	06
09	CA	ORANGE COUNTY	06059C0035F	14-JUN-2000	00-09-357P	06
09	CA	ORANGE COUNTY	06059C0036F	14-JUN-2000	00-09-357P	06
09	CA	ORANGE COUNTY	06059C0037F	14-JUN-2000	00-09-357P	06
09	CA	ORANGE COUNTY	06059C0045F	14-JUN-2000	00-09-357P	06
09	CA	ORANGE COUNTY	06059C0046F	14-JUN-2000	00-09-357P	06
09	CA	ORANGE COUNTY	06059C0054F	14-JUN-2000	00-09-357P	06
09	CA	ORANGE COUNTY	06059C0057E	10-MAY-2000	00-09-413A	02
09	CA	ORANGE COUNTY	06059C0049G	31-MAR-2000	00-09-440A	02
09	CA	ORANGE COUNTY	06059C0014F	14-JUN-2000	00-09-449P	06
09	CA	ORANGE COUNTY	06059C0021F	14-JUN-2000	00-09-449P	06
09	CA	ORANGE COUNTY	06059C0027F	14-JUN-2000	00-09-449P	06
09	CA	ORANGE COUNTY	06059C0028F	14-JUN-2000	00-09-449P	06
09	CA	ORANGE COUNTY	06059C0029F	14-JUN-2000	00-09-449P	06
09	CA	ORANGE COUNTY	06059C0035F	14-JUN-2000	00-09-449P	06
09	CA	ORANGE COUNTY	06059C0036F	14-JUN-2000	00-09-449P	06
09	CA	ORANGE COUNTY	06059C0037F	14-JUN-2000	00-09-449P	06
09	CA	ORANGE COUNTY	06059C0045F	14-JUN-2000	00-09-449P	06
09	CA	ORANGE COUNTY	06059C0046F	14-JUN-2000	00-09-449P	06
09	CA	ORANGE COUNTY	06059C0054F	14-JUN-2000	00-09-449P	06
09	CA	ORANGE COUNTY	06059C0014F	14-JUN-2000	00-09-469P	06
09	CA	ORANGE COUNTY	06059C0021F	14-JUN-2000	00-09-469P	06
09	CA	ORANGE COUNTY	06059C0027F	14-JUN-2000	00-09-469P	06
09	CA	ORANGE COUNTY	06059C0028F	14-JUN-2000	00-09-469P	06
09	CA	ORANGE COUNTY	06059C0029F	14-JUN-2000	00-09-469P	06
09	CA	ORANGE COUNTY	06059C0035F	14-JUN-2000	00-09-469P	06
09	CA	ORANGE COUNTY	06059C0036F	14-JUN-2000	00-09-469P	06
09	CA	ORANGE COUNTY	06059C0037F	14-JUN-2000	00-09-469P	06
09	CA	ORANGE COUNTY	06059C0045F	14-JUN-2000	00-09-469P	06
09	CA	ORANGE COUNTY	06059C0046F	14-JUN-2000	00-09-469P	06
09	CA	ORANGE COUNTY	06059C0054F	14-JUN-2000	00-09-469P	06
09	CA	ORANGE, CITY OF	06059C0014F	14-JUN-2000	00-09-153P	06
09	CA	ORANGE, CITY OF	06059C0021F	14-JUN-2000	00-09-153P	06
09	CA	ORANGE, CITY OF	06059C0029F	14-JUN-2000	00-09-153P	06
09	CA	ORANGE, CITY OF	06059C0022F	06-JAN-2000	00-09-217A	02
09	CA	ORANGE, CITY OF	06059C0014F	14-JUN-2000	00-09-469P	06
09	CA	ORANGE, CITY OF	06059C0021F	14-JUN-2000	00-09-469P	06
09	CA	ORANGE, CITY OF	06059C0029F	14-JUN-2000	00-09-469P	06
09	CA	PALO ALTO, CITY OF	0603480002E	02-FEB-2000	00-09-141A	02
09	CA	PALO ALTO, CITY OF	0603480002E	14-FEB-2000	00-09-204A	02
09	CA	PALO ALTO, CITY OF	0603480002E	06-JAN-2000	00-09-225A	02
09	CA	PALO ALTO, CITY OF	0603480002E	14-FEB-2000	00-09-271A	02
09	CA	PALO ALTO, CITY OF	0603480003E	24-FEB-2000	00-09-366A	02
09	CA	PALO ALTO, CITY OF	0603480002E	29-MAR-2000	00-09-427A	02
09	CA	PALO ALTO, CITY OF	0603480003E	20-APR-2000	00-09-534A	02
09	CA	PALO ALTO, CITY OF	0603480002E	11-MAY-2000	00-09-590A	02
09	CA	PALO ALTO, CITY OF	0603480002E	25-MAY-2000	00-09-682A	02
09	CA	PALO ALTO, CITY OF	0603480002E	25-MAY-2000	00-09-684A	02
09	CA	PITTSBURG, CITY OF	0600330001D	21-JAN-2000	00-09-221A	02
09	CA	PITTSBURG, CITY OF	0600330001D	21-APR-2000	00-09-613A	02
09	CA	PLACER COUNTY	06061C0100F	10-MAR-2000	99-09-637P	06
09	CA	PLEASANTON, CITY OF	0600120001E	24-JAN-2000	00-09-231A	02
09	CA	PLUMAS COUNTY	060244B	28-MAR-2000	00-09-331A	02
09	CA	PLUMAS COUNTY	060244B	22-MAY-2000	00-09-538A	02
09	CA	PLUMAS COUNTY	060244B	28-JUN-2000	00-09-752A	01
09	CA	PLUMAS COUNTY	060244B	28-JUN-2000	00-09-757A	02
09	CA	POWAY, CITY OF	06073C1356F	05-JUN-2000	00-09-535A	02
09	CA	RANCHO CUCAMONGA, CITY OF	06071C7890F	07-MAR-2000	00-09-359A	02
09	CA	RANCHO CUCAMONGA, CITY OF	06071C7895F	04-APR-2000	00-09-429P	06
09	CA	RANCHO CUCAMONGA, CITY OF	06071C7890F	26-JUN-2000	00-09-456A	01
09	CA	RANCHO CUCAMONGA, CITY OF	06071C7890F	10-APR-2000	00-09-512A	02
09	CA	RANCHO CUCAMONGA, CITY OF	06071C7890F	17-APR-2000	00-09-513A	02
09	CA	RANCHO CUCAMONGA, CITY OF	06071C7890F	30-JUN-2000	00-09-731A	02
09	CA	RED BLUFF, CITY OF	0650530002F	09-MAR-2000	00-09-255A	17
09	CA	REDDING, CITY OF	0603600025D	26-JUN-2000	00-09-735A	02
09	CA	REDDING, CITY OF	0603600025D	26-JUN-2000	00-09-758A	02
09	CA	REDDING, CITY OF	0603600025D	26-JUN-2000	00-09-760A	02
09	CA	REDLANDS, CITY OF	06071C8716F	07-FEB-2000	00-09-180A	02
09	CA	RIDGECREST, CITY OF	0600810010B	24-MAY-2000	00-09-549A	02

Region	State	Community	Map panel	Determination date	Case No.	Type
09	CA	RIVERSIDE COUNTY	0602452065B	27-MAR-2000	00-09-380A	01
09	CA	RIVERSIDE COUNTY	0602451585B	05-JAN-2000	99-09-1278A	02
09	CA	RIVERSIDE COUNTY	0602452125B	18-FEB-2000	99-09-513P	05
09	CA	ROCKLIN, CITY OF	06061C0414F	09-FEB-2000	00-09-196A	01
09	CA	SACRAMENTO COUNTY	0602620320E	30-MAR-2000	00-09-090P	06
09	CA	SACRAMENTO COUNTY	0602620315D	04-JAN-2000	00-09-178P	06
09	CA	SACRAMENTO COUNTY	060262IND0	06-JAN-2000	00-09-184P	06
09	CA	SACRAMENTO COUNTY	0602620205E	07-MAR-2000	00-09-209A	01
09	CA	SACRAMENTO COUNTY	0602620340D	27-JAN-2000	00-09-211A	01
09	CA	SACRAMENTO COUNTY	0602620320E	18-JAN-2000	00-09-213A	01
09	CA	SACRAMENTO COUNTY	0602620090E	16-FEB-2000	00-09-270A	02
09	CA	SACRAMENTO COUNTY	0602620065F	01-MAR-2000	00-09-341A	01
09	CA	SACRAMENTO COUNTY	0602620340D	24-FEB-2000	00-09-360A	01
09	CA	SACRAMENTO COUNTY	0602620115E	14-JUN-2000	00-09-460A	01
09	CA	SACRAMENTO COUNTY	0602620090E	05-APR-2000	00-09-462A	02
09	CA	SACRAMENTO COUNTY	0602620310F	26-APR-2000	00-09-543A	02
09	CA	SACRAMENTO COUNTY	0602620070D	24-MAY-2000	00-09-645A	02
09	CA	SACRAMENTO COUNTY	0602620335D	30-MAY-2000	00-09-647A	01
09	CA	SACRAMENTO COUNTY	0602620310F	24-MAY-2000	00-09-649A	02
09	CA	SACRAMENTO COUNTY	0602620205E	24-MAY-2000	00-09-651A	02
09	CA	SACRAMENTO COUNTY	0602620185F	06-JUN-2000	00-09-690A	02
09	CA	SACRAMENTO COUNTY	0602620185F	22-MAY-2000	99-09-1286P	06
09	CA	SACRAMENTO COUNTY	0602620190E	22-MAY-2000	99-09-1286P	06
09	CA	SACRAMENTO COUNTY	0602620195F	22-MAY-2000	99-09-1286P	06
09	CA	SACRAMENTO COUNTY	0602620205E	22-MAY-2000	99-09-1286P	06
09	CA	SACRAMENTO COUNTY	0602620215E	22-MAY-2000	99-09-1286P	06
09	CA	SACRAMENTO COUNTY	0602620285E	22-MAY-2000	99-09-1286P	06
09	CA	SACRAMENTO COUNTY	0602620305F	22-MAY-2000	99-09-1286P	06
09	CA	SACRAMENTO COUNTY	0602620205E	21-MAR-2000	99-09-758P	05
09	CA	SACRAMENTO COUNTY	0602620210E	21-MAR-2000	99-09-758P	05
09	CA	SACRAMENTO COUNTY	0602620215E	21-MAR-2000	99-09-758P	05
09	CA	SACRAMENTO COUNTY	0602620220C	21-MAR-2000	99-09-758P	05
09	CA	SACRAMENTO COUNTY	0602620250C	21-MAR-2000	99-09-758P	05
09	CA	SACRAMENTO, CITY OF	0602660005F	22-MAY-2000	99-09-1286P	06
09	CA	SACRAMENTO, CITY OF	0602660010F	22-MAY-2000	99-09-1286P	06
09	CA	SACRAMENTO, CITY OF	0602660015F	22-MAY-2000	99-09-1286P	06
09	CA	SACRAMENTO, CITY OF	0602660025F	22-MAY-2000	99-09-1286P	06
09	CA	SACRAMENTO, CITY OF	0602660030F	22-MAY-2000	99-09-1286P	06
09	CA	SALINAS, CITY OF	0601950068D	19-MAY-2000	99-09-691A	01
09	CA	SALINAS, CITY OF	0602020002D	19-MAY-2000	99-09-691A	01
09	CA	SAN BERNARDINO COUNTY	06071C7155F	24-APR-2000	00-09-445A	02
09	CA	SAN CLEMENTE, CITY OF	06059C0079F	29-MAR-2000	00-09-123P	06
09	CA	SAN DIEGO COUNTY	06073C1907F	27-MAR-2000	00-09-052P	06
09	CA	SAN DIEGO COUNTY	06073C1909F	27-MAR-2000	00-09-052P	06
09	CA	SAN DIEGO COUNTY	06073C1686F	03-APR-2000	00-09-264P	05
09	CA	SAN DIEGO COUNTY	06073C1687F	03-APR-2000	00-09-264P	05
09	CA	SAN DIEGO COUNTY	06073C1918F	15-MAR-2000	00-09-352A	01
09	CA	SAN DIEGO COUNTY	06073C1660F	09-JUN-2000	00-09-696A	02
09	CA	SAN DIEGO COUNTY	06073C1652F	14-FEB-2000	99-09-492P	05
09	CA	SAN DIEGO, CITY OF	06073C1904F	30-JUN-2000	00-09-766A	02
09	CA	SAN DIEGO, CITY OF	06073C1079F	31-JAN-2000	99-09-888P	05
09	CA	SAN DIEGO, CITY OF	06073C1083F	31-JAN-2000	99-09-888P	05
09	CA	SAN JACINTO, CITY OF	0650560005D	25-MAY-2000	00-09-639A	01
09	CA	SAN JOSE, CITY OF	0603490031D	18-JAN-2000	00-09-208A	02
09	CA	SAN JOSE, CITY OF	0603490047E	11-MAY-2000	00-09-276A	02
09	CA	SAN JOSE, CITY OF	0603490009G	03-FEB-2000	00-09-283A	02
09	CA	SAN JOSE, CITY OF	0603490009G	16-FEB-2000	00-09-290A	02
09	CA	SAN JOSE, CITY OF	0603490020F	07-MAR-2000	00-09-371A	02
09	CA	SAN JOSE, CITY OF	0603490009G	17-MAR-2000	00-09-438A	02
09	CA	SAN JOSE, CITY OF	0603490037D	27-MAR-2000	00-09-453A	02
09	CA	SAN JOSE, CITY OF	0603490009G	03-APR-2000	00-09-481A	02
09	CA	SAN JOSE, CITY OF	0603490014E	10-MAY-2000	00-09-593A	02
09	CA	SAN JOSE, CITY OF	0603490009G	25-MAY-2000	00-09-666A	02
09	CA	SAN LEANDRO, CITY OF	0600130002C	28-MAR-2000	00-09-297A	02
09	CA	SAN LEANDRO, CITY OF	0600130003C	28-MAR-2000	00-09-424A	01
09	CA	SAN LEANDRO, CITY OF	0600130003C	24-MAY-2000	00-09-655A	01
09	CA	SAN LEANDRO, CITY OF	0600130003C	10-FEB-2000	99-09-1306V	19
09	CA	SAN LUIS OBISPO COUNTY	0603040625C	31-MAR-2000	00-09-444A	02
09	CA	SAN LUIS OBISPO COUNTY	0603040729C	05-JUN-2000	00-09-604A	02
09	CA	SAN MARCOS, CITY OF	06073C0789G	02-JUN-2000	00-09-672A	02
09	CA	SANTA ANA, CITY OF	06059C0021F	14-JUN-2000	00-09-153P	06
09	CA	SANTA ANA, CITY OF	06059C0028F	14-JUN-2000	00-09-153P	06
09	CA	SANTA ANA, CITY OF	06059C0029F	14-JUN-2000	00-09-153P	06

Region	State	Community	Map panel	Determination date	Case No.	Type
09	CA	SANTA ANA, CITY OF	06059C0037F	14-JUN-2000	00-09-153P	06
09	CA	SANTA ANA, CITY OF	06059C0038F	14-JUN-2000	00-09-153P	06
09	CA	SANTA ANA, CITY OF	06059C0021F	14-JUN-2000	00-09-351P	06
09	CA	SANTA ANA, CITY OF	06059C0028F	14-JUN-2000	00-09-351P	06
09	CA	SANTA ANA, CITY OF	06059C0029F	14-JUN-2000	00-09-351P	06
09	CA	SANTA ANA, CITY OF	06059C0037F	14-JUN-2000	00-09-351P	06
09	CA	SANTA ANA, CITY OF	06059C0038F	14-JUN-2000	00-09-351P	06
09	CA	SANTA ANA, CITY OF	06059C0021F	14-JUN-2000	00-09-357P	06
09	CA	SANTA ANA, CITY OF	06059C0028F	14-JUN-2000	00-09-357P	06
09	CA	SANTA ANA, CITY OF	06059C0029F	14-JUN-2000	00-09-357P	06
09	CA	SANTA ANA, CITY OF	06059C0037F	14-JUN-2000	00-09-357P	06
09	CA	SANTA ANA, CITY OF	06059C0038F	14-JUN-2000	00-09-357P	06
09	CA	SANTA ANA, CITY OF	06059C0038F	17-MAR-2000	00-09-414A	02
09	CA	SANTA ANA, CITY OF	06059C0021F	14-JUN-2000	00-09-449P	06
09	CA	SANTA ANA, CITY OF	06059C0028F	14-JUN-2000	00-09-449P	06
09	CA	SANTA ANA, CITY OF	06059C0029F	14-JUN-2000	00-09-449P	06
09	CA	SANTA ANA, CITY OF	06059C0037F	14-JUN-2000	00-09-449P	06
09	CA	SANTA ANA, CITY OF	06059C0038F	14-JUN-2000	00-09-449P	06
09	CA	SANTA ANA, CITY OF	06059C0021F	14-JUN-2000	00-09-469P	06
09	CA	SANTA ANA, CITY OF	06059C0028F	14-JUN-2000	00-09-469P	06
09	CA	SANTA ANA, CITY OF	06059C0029F	14-JUN-2000	00-09-469P	06
09	CA	SANTA ANA, CITY OF	06059C0037F	14-JUN-2000	00-09-469P	06
09	CA	SANTA ANA, CITY OF	06059C0038F	14-JUN-2000	00-09-469P	06
09	CA	SANTA BARBARA COUNTY	0603310765E	08-FEB-2000	00-09-254A	02
09	CA	SANTA BARBARA, CITY OF	0603350004D	11-JAN-2000	00-09-210A	02
09	CA	SANTA BARBARA, CITY OF	0603350005D	24-APR-2000	00-09-314A	02
09	CA	SANTA BARBARA, CITY OF	0603350010D	24-APR-2000	00-09-314A	02
09	CA	SANTA BARBARA, CITY OF	0603350009D	03-APR-2000	00-09-379A	17
09	CA	SANTA BARBARA, CITY OF	0603350005D	16-MAY-2000	00-09-525A	02
09	CA	SANTA BARBARA, CITY OF	0603350010D	04-MAY-2000	00-09-566A	02
09	CA	SANTA BARBARA, CITY OF	0603350009D	16-MAY-2000	00-09-622A	02
09	CA	SANTA CLARA COUNTY	0603370630E	11-JAN-2000	00-09-098A	02
09	CA	SANTA CLARA COUNTY	0603370630E	13-MAR-2000	00-09-307A	02
09	CA	SANTA CLARA COUNTY	0603370645A	28-JUN-2000	00-09-765A	02
09	CA	SANTA CLARA COUNTY	0603370640E	13-JAN-2000	99-09-1150A	02
09	CA	SANTA CLARA, CITY OF	0603500001D	07-FEB-2000	00-09-243A	02
09	CA	SANTA CLARA, CITY OF	0603500005D	07-MAR-2000	00-09-311A	02
09	CA	SANTA CLARA, CITY OF	0603500001D	24-MAR-2000	00-09-406A	02
09	CA	SANTA CLARA, CITY OF	0603500003D	22-MAR-2000	00-09-452A	02
09	CA	SANTA CLARA, CITY OF	0603500001D	22-MAR-2000	00-09-464A	02
09	CA	SANTA CLARA, CITY OF	0603500001D	21-APR-2000	00-09-542A	02
09	CA	SANTA CLARA, CITY OF	0603500005D	10-MAY-2000	00-09-599A	02
09	CA	SANTA CLARA, CITY OF	0603500001D	26-MAY-2000	00-09-686A	02
09	CA	SANTA CLARA, CITY OF	0603500005D	02-JUN-2000	00-09-718A	02
09	CA	SANTA CLARA, CITY OF	0603500001D	16-JUN-2000	00-09-727A	02
09	CA	SANTA CLARITA, CITY OF	0607290365C	15-MAY-2000	00-09-025P	05
09	CA	SANTA CLARITA, CITY OF	0607290480C	15-MAY-2000	00-09-025P	05
09	CA	SANTA CLARITA, CITY OF	0607290485C	15-MAY-2000	00-09-025P	05
09	CA	SANTA CLARITA, CITY OF	0650430370B	15-MAY-2000	00-09-025P	05
09	CA	SANTA CLARITA, CITY OF	0607290460C	18-JAN-2000	99-09-399P	05
09	CA	SANTA CLARITA, CITY OF	0607290480C	18-JAN-2000	99-09-399P	05
09	CA	SANTA PAULA, CITY OF	0604200003D	24-MAR-2000	00-09-275A	02
09	CA	SANTA PAULA, CITY OF	0604200003D	30-MAY-2000	00-09-630A	01
09	CA	SANTEE, CITY OF	06073C1653F	22-FEB-2000	00-09-309A	02
09	CA	SANTEE, CITY OF	06073C1652F	14-FEB-2000	99-09-492P	05
09	CA	SHASTA COUNTY	0603580715B	21-JAN-2000	00-09-224A	02
09	CA	SHASTA COUNTY	0603580715B	22-MAR-2000	00-09-408A	02
09	CA	SHASTA COUNTY	0603580695D	14-JUN-2000	00-09-637A	02
09	CA	SHASTA COUNTY	0603580725B	24-MAY-2000	00-09-640A	02
09	CA	SHASTA LAKE, CITY OF	0607580005A	24-JAN-2000	00-09-099A	02
09	CA	SIMI VALLEY, CITY OF	0604210006B	12-JAN-2000	00-09-130A	02
09	CA	SIMI VALLEY, CITY OF	0604210008B	05-JAN-2000	00-09-194A	02
09	CA	SIMI VALLEY, CITY OF	0604210004B	21-JAN-2000	00-09-222A	02
09	CA	SIMI VALLEY, CITY OF	0604210004B	07-MAR-2000	00-09-320A	02
09	CA	SIMI VALLEY, CITY OF	0604210004B	07-APR-2000	00-09-458A	02
09	CA	SIMI VALLEY, CITY OF	0604210007B	04-MAY-2000	00-09-502A	01
09	CA	SIMI VALLEY, CITY OF	0604210002B	20-APR-2000	00-09-518A	02
09	CA	SIMI VALLEY, CITY OF	0604210007B	25-APR-2000	00-09-537A	02
09	CA	SIMI VALLEY, CITY OF	0604210008B	12-MAY-2000	00-09-584A	01
09	CA	SIMI VALLEY, CITY OF	0604210002B	30-JUN-2000	00-09-603A	01
09	CA	SIMI VALLEY, CITY OF	0604210004B	30-JUN-2000	00-09-603A	01
09	CA	SIMI VALLEY, CITY OF	0604210006B	09-MAY-2000	00-09-605A	02
09	CA	SIMI VALLEY, CITY OF	0604210004B	09-JUN-2000	00-09-698A	02

Region	State	Community	Map panel	Determination date	Case No.	Type
09	CA	SISKIYOU COUNTY	0603620850B	27-MAR-2000	00-09-416A	02
09	CA	SISKIYOU COUNTY	0603621325B	09-JUN-2000	00-09-641A	02
09	CA	SOLANO COUNTY	0606310406B	29-FEB-2000	00-09-335A	02
09	CA	SOLANO COUNTY	0606310406B	25-APR-2000	00-09-422A	02
09	CA	SOLANO COUNTY	0606310406B	09-JUN-2000	00-09-681A	02
09	CA	SONOMA COUNTY	0603750660B	11-JAN-2000	00-09-207A	02
09	CA	SONOMA COUNTY	0603750530B	25-APR-2000	00-09-539A	02
09	CA	SONOMA COUNTY	0603750870B	02-JUN-2000	00-09-601A	01
09	CA	SOUTH SAN FRANCISCO, CITY OF	0650620001B	28-JUN-2000	00-09-280A	01
09	CA	SOUTH SAN FRANCISCO, CITY OF	0650620007B	28-JUN-2000	00-09-280A	01
09	CA	STOCKTON, CITY OF	0603020015D	24-FEB-2000	00-09-316A	02
09	CA	STOCKTON, CITY OF	0602990290B	10-MAY-2000	00-09-564P	05
09	CA	SUISUN CITY, CITY OF	0603720001B	19-MAY-2000	00-09-596A	02
09	CA	SUNNYVALE, CITY OF	0603520001D	24-MAY-2000	00-09-411A	02
09	CA	SUNNYVALE, CITY OF	0603520001D	28-APR-2000	00-09-553A	02
09	CA	SUNNYVALE, CITY OF	0603520001D	25-APR-2000	00-09-563A	02
09	CA	SUNNYVALE, CITY OF	0603520001D	09-MAY-2000	00-09-582A	02
09	CA	SUNNYVALE, CITY OF	0603520001D	28-APR-2000	00-09-609A	02
09	CA	SUNNYVALE, CITY OF	0603520001D	19-MAY-2000	00-09-629A	02
09	CA	SUTTER CREEK, CITY OF	0604580005B	15-MAR-2000	00-09-405A	02
09	CA	TEMECULA, CITY OF	0607420010B	19-APR-2000	00-09-578A	02
09	CA	THOUSAND OAKS, CITY OF	0604220015B	03-FEB-2000	00-09-171A	02
09	CA	THOUSAND OAKS, CITY OF	0604220015B	28-FEB-2000	00-09-328A	02
09	CA	TORRANCE, CITY OF	0601650003B	31-MAY-2000	00-09-540A	02
09	CA	TRINITY COUNTY	06105C0625B	03-FEB-2000	00-09-139A	02
09	CA	TRINITY COUNTY	06105C0505C	21-MAR-2000	00-09-410A	02
09	CA	TULARE COUNTY	0650661210B	13-MAR-2000	00-09-339A	02
09	CA	TULARE COUNTY	0650660480B	17-APR-2000	00-09-421A	02
09	CA	UKIAH, CITY OF	0601860001E	16-MAY-2000	00-09-533A	02
09	CA	UNION CITY, CITY OF	0600140010B	07-JAN-2000	00-09-182A	01
09	CA	UNION CITY, CITY OF	0600140010C	18-APR-2000	00-09-507A	02
09	CA	UNION CITY, CITY OF	0600140010C	10-FEB-2000	99-09-1306V	19
09	CA	VACAVILLE, CITY OF	0603730012C	24-APR-2000	00-09-529A	02
09	CA	VACAVILLE, CITY OF	0603730014C	21-JUN-2000	00-09-722A	02
09	CA	VENTURA COUNTY	0604130940B	14-FEB-2000	00-09-088A	02
09	CA	VENTURA COUNTY	0604130645B	28-JAN-2000	00-09-261A	01
09	CA	VENTURA COUNTY	0604130620B	21-MAR-2000	00-09-326A	02
09	CA	VENTURA COUNTY	0604130940B	02-JUN-2000	00-09-511A	02
09	CA	VENTURA COUNTY	0604130940B	02-JUN-2000	00-09-514A	02
09	CA	VISALIA, CITY OF	0604090010C	05-JAN-2000	00-09-195A	01
09	CA	VISALIA, CITY OF	0604090010C	14-FEB-2000	00-09-226P	06
09	CA	VISALIA, CITY OF	0604090010C	09-FEB-2000	00-09-258A	01
09	CA	VISALIA, CITY OF	0650660465C	05-APR-2000	00-09-298A	01
09	CA	WALNUT CREEK, CITY OF	0650700002C	08-MAR-2000	00-09-137P	05
09	CA	WESTMINSTER, CITY OF	06059C0027F	14-JUN-2000	00-09-153P	06
09	CA	WESTMINSTER, CITY OF	06059C0028F	14-JUN-2000	00-09-153P	06
09	CA	WESTMINSTER, CITY OF	06059C0036F	14-JUN-2000	00-09-153P	06
09	CA	WESTMINSTER, CITY OF	06059C0037F	14-JUN-2000	00-09-153P	06
09	CA	WESTMINSTER, CITY OF	06059C0028F	24-MAR-2000	00-09-386A	02
09	CA	WESTMINSTER, CITY OF	06059C0027F	14-JUN-2000	00-09-449P	06
09	CA	WESTMINSTER, CITY OF	06059C0028F	14-JUN-2000	00-09-449P	06
09	CA	WESTMINSTER, CITY OF	06059C0036F	14-JUN-2000	00-09-449P	06
09	CA	WESTMINSTER, CITY OF	06059C0037F	14-JUN-2000	00-09-449P	06
09	CA	WESTMINSTER, CITY OF	06059C0028F	30-JUN-2000	00-09-611A	01
09	CA	WINDSOR, TOWN OF	0603750545B	17-MAY-2000	00-09-555A	01
09	CA	WOODLAND, CITY OF	0604230425C	16-FEB-2000	00-09-288A	02
09	CA	WOODLAND, CITY OF	0604230425C	06-APR-2000	00-09-455A	02
09	CA	WOODLAND, CITY OF	0604230425C	14-JUN-2000	00-09-702A	02
09	CA	YOLO COUNTY	0604230560C	15-MAR-2000	00-09-245A	02
09	HI	HAWAII COUNTY	1551660890C	27-APR-2000	99-09-703P	06
09	HI	HAWAII COUNTY	1551660714C	06-JAN-2000	99-09-913P	05
09	HI	HONOLULU COUNTY	1500010005B	24-JAN-2000	99-09-1056P	05
09	NV	CLARK COUNTY	32003C2135D	12-MAY-2000	00-09-044P	06
09	NV	CLARK COUNTY	32003C3995D	07-JAN-2000	00-09-117P	05
09	NV	CLARK COUNTY	32003C4015D	07-JAN-2000	00-09-117P	05
09	NV	CLARK COUNTY	32003C4060D	07-JAN-2000	00-09-117P	05
09	NV	CLARK COUNTY	32003C4080D	07-JAN-2000	00-09-117P	05
09	NV	CLARK COUNTY	32003C2187D	21-MAR-2000	00-09-268P	06
09	NV	CLARK COUNTY	32003C2190D	21-MAR-2000	00-09-268P	06
09	NV	CLARK COUNTY	32003C2200D	21-MAR-2000	00-09-268P	06
09	NV	CLARK COUNTY	32003C2567D	21-MAR-2000	00-09-268P	06
09	NV	CLARK COUNTY	32003C2578D	21-MAR-2000	00-09-268P	06
09	NV	CLARK COUNTY	32003C2579D	21-MAR-2000	00-09-268P	06

Region	State	Community	Map panel	Determination date	Case No.	Type
09	NV	CLARK COUNTY	32003C2580D	21-MAR-2000	00-09-268P	06
09	NV	CLARK COUNTY	32003C2583D	21-MAR-2000	00-09-268P	06
09	NV	CLARK COUNTY	32003C2585D	21-MAR-2000	00-09-268P	06
09	NV	CLARK COUNTY	32003C2586D	21-MAR-2000	00-09-268P	06
09	NV	CLARK COUNTY	32003C2590D	21-MAR-2000	00-09-268P	06
09	NV	CLARK COUNTY	32003C2605D	21-MAR-2000	00-09-268P	06
09	NV	CLARK COUNTY	32003C2610D	21-MAR-2000	00-09-268P	06
09	NV	CLARK COUNTY	32003C2551D	30-MAR-2000	00-09-344A	02
09	NV	CLARK COUNTY	32003C4015D	07-MAR-2000	00-09-372A	02
09	NV	CLARK COUNTY	32003C2545D	28-JUN-2000	00-09-428P	05
09	NV	CLARK COUNTY	32003C2552D	28-JUN-2000	00-09-428P	05
09	NV	CLARK COUNTY	32003C2553D	28-JUN-2000	00-09-428P	05
09	NV	CLARK COUNTY	32003C2554D	28-JUN-2000	00-09-428P	05
09	NV	CLARK COUNTY	32003C2561D	28-JUN-2000	00-09-428P	05
09	NV	CLARK COUNTY	32003C2562D	28-JUN-2000	00-09-428P	05
09	NV	CLARK COUNTY	32003C2187D	19-JAN-2000	99-09-1119P	05
09	NV	CLARK COUNTY	32003C2190D	19-JAN-2000	99-09-1119P	05
09	NV	CLARK COUNTY	32003C2200D	19-JAN-2000	99-09-1119P	05
09	NV	CLARK COUNTY	32003C2585D	19-JAN-2000	99-09-1119P	05
09	NV	CLARK COUNTY	32003C2605D	19-JAN-2000	99-09-1119P	05
09	NV	CLARK COUNTY	32003C2610D	19-JAN-2000	99-09-1119P	05
09	NV	CLARK COUNTY	32003C2583D	21-MAR-2000	99-09-211P	06
09	NV	CLARK COUNTY	32003C2595D	21-MAR-2000	99-09-211P	06
09	NV	CLARK COUNTY	32003C2567D	19-JAN-2000	99-09-230P	05
09	NV	CLARK COUNTY	32003C2580D	19-JAN-2000	99-09-230P	05
09	NV	CLARK COUNTY	32003C2585D	19-JAN-2000	99-09-230P	05
09	NV	CLARK COUNTY	32003C2590D	19-JAN-2000	99-09-230P	05
09	NV	CLARK COUNTY	32003C0379D	15-MAY-2000	99-09-457P	06
09	NV	DOUGLAS COUNTY	32005C0060F	30-MAR-2000	00-09-198A	01
09	NV	DOUGLAS COUNTY	32005C0240F	06-APR-2000	00-09-423A	02
09	NV	HENDERSON, CITY OF	32003C2930D	24-FEB-2000	00-09-164P	06
09	NV	HENDERSON, CITY OF	32003C2187D	21-MAR-2000	00-09-268P	05
09	NV	HENDERSON, CITY OF	32003C2190D	21-MAR-2000	00-09-268P	05
09	NV	HENDERSON, CITY OF	32003C2200D	21-MAR-2000	00-09-268P	05
09	NV	HENDERSON, CITY OF	32003C2567D	21-MAR-2000	00-09-268P	05
09	NV	HENDERSON, CITY OF	32003C2578D	21-MAR-2000	00-09-268P	05
09	NV	HENDERSON, CITY OF	32003C2579D	21-MAR-2000	00-09-268P	05
09	NV	HENDERSON, CITY OF	32003C2580D	21-MAR-2000	00-09-268P	05
09	NV	HENDERSON, CITY OF	32003C2583D	21-MAR-2000	00-09-268P	05
09	NV	HENDERSON, CITY OF	32003C2585D	21-MAR-2000	00-09-268P	05
09	NV	HENDERSON, CITY OF	32003C2586D	21-MAR-2000	00-09-268P	05
09	NV	HENDERSON, CITY OF	32003C2590D	21-MAR-2000	00-09-268P	05
09	NV	HENDERSON, CITY OF	32003C2605D	21-MAR-2000	00-09-268P	05
09	NV	HENDERSON, CITY OF	32003C2610D	21-MAR-2000	00-09-268P	05
09	NV	HENDERSON, CITY OF	32003C2590D	10-FEB-2000	00-09-324A	01
09	NV	HENDERSON, CITY OF	32003C2590D	15-MAR-2000	00-09-387A	01
09	NV	HENDERSON, CITY OF	32003C2580D	19-JAN-2000	97-09-574P	05
09	NV	HENDERSON, CITY OF	32003C2187D	19-JAN-2000	99-09-1119P	05
09	NV	HENDERSON, CITY OF	32003C2190D	19-JAN-2000	99-09-1119P	05
09	NV	HENDERSON, CITY OF	32003C2200D	19-JAN-2000	99-09-1119P	05
09	NV	HENDERSON, CITY OF	32003C2585D	19-JAN-2000	99-09-1119P	05
09	NV	HENDERSON, CITY OF	32003C2605D	19-JAN-2000	99-09-1119P	05
09	NV	HENDERSON, CITY OF	32003C2610D	19-JAN-2000	99-09-1119P	05
09	NV	HENDERSON, CITY OF	32003C2583D	21-MAR-2000	99-09-211P	06
09	NV	HENDERSON, CITY OF	32003C2595D	21-MAR-2000	99-09-211P	06
09	NV	HENDERSON, CITY OF	32003C2567D	19-JAN-2000	99-09-230P	05
09	NV	HENDERSON, CITY OF	32003C2580D	19-JAN-2000	99-09-230P	05
09	NV	HENDERSON, CITY OF	32003C2585D	19-JAN-2000	99-09-230P	05
09	NV	HENDERSON, CITY OF	32003C2590D	19-JAN-2000	99-09-230P	05
09	NV	LANDER COUNTY	3200130140E	02-MAY-2000	00-09-491A	02
09	NV	LYON COUNTY	3200290055C	12-APR-2000	00-09-483A	02
09	NV	MESQUITE, CITY OF	32003C0379D	15-MAY-2000	99-09-457P	06
09	NV	MESQUITE, CITY OF	32003C0387D	15-MAY-2000	99-09-457P	06
09	NV	NORTH LAS VEGAS, CITY OF	32003C2160D	10-MAY-2000	99-09-1060P	06
09	NV	RENO, CITY OF	32031C3158E	07-JAN-2000	00-09-206A	01
09	NV	SPARKS, CITY OF	32031C3005E	10-FEB-2000	00-09-004P	05
09	NV	SPARKS, CITY OF	32031C3010E	10-FEB-2000	00-09-004P	05
09	NV	SPARKS, CITY OF	32031C3003E	29-FEB-2000	00-09-265P	06
09	NV	SPARKS, CITY OF	32031C3005E	29-FEB-2000	00-09-265P	06
09	NV	SPARKS, CITY OF	32031C2994E	28-APR-2000	00-09-329A	02
09	NV	WASHOE COUNTY	32031C3158E	07-FEB-2000	00-09-121A	02
09	NV	WASHOE COUNTY	32031C3003E	29-FEB-2000	00-09-265P	06
09	NV	WASHOE COUNTY	32031C3005E	29-FEB-2000	00-09-265P	06

Region	State	Community	Map panel	Determination date	Case No.	Type
09	NV	WASHOE COUNTY	32031C3176E	25-APR-2000	00-09-589A	02
09	NV	WASHOE COUNTY	32031C2825E	28-JUN-2000	00-09-762A	02
10	AK	FAIRBANKS-NORTH STAR BOROUGH	0250090181G	06-APR-2000	00-10-116A	02
10	AK	FAIRBANKS-NORTH STAR BOROUGH	0250090212H	03-MAY-2000	00-10-255A	02
10	AK	JUNEAU, CITY AND BOROUGH OF	0200090880C	18-APR-2000	00-10-266A	02
10	AK	MATANUSKA-SUSITNA, BOROUGH OF	0200219700C	28-MAR-2000	00-10-091A	02
10	ID	ADA COUNTY	16001C0153G	23-FEB-2000	00-10-072P	05
10	ID	ADA COUNTY	16001C0154G	23-FEB-2000	00-10-072P	05
10	ID	ADA COUNTY	16001C0254G	25-APR-2000	00-10-210A	01
10	ID	ADA COUNTY	16001C0153G	09-JUN-2000	00-10-289P	06
10	ID	ADA COUNTY	16001C0254G	09-JUN-2000	00-10-309A	02
10	ID	BELLEVUE, CITY OF	1600210857D	08-FEB-2000	00-10-104A	01
10	ID	BELLEVUE, CITY OF	1600210857D	04-JAN-2000	00-10-115P	05
10	ID	BELLEVUE, CITY OF	1600210859D	04-JAN-2000	00-10-115P	05
10	ID	BLAINE COUNTY	1651670857C	04-JAN-2000	00-10-115P	05
10	ID	BLAINE COUNTY	1651671175B	21-APR-2000	00-10-284V	19
10	ID	BOISE COUNTY	16015C0400B	24-FEB-2000	00-10-145A	02
10	ID	BONNER COUNTY	1602060210B	16-FEB-2000	00-10-111A	02
10	ID	BONNER COUNTY	1602060300C	18-FEB-2000	00-10-142A	02
10	ID	BONNER COUNTY	1602060325B	10-APR-2000	00-10-233A	02
10	ID	BONNER COUNTY	1602060325B	17-MAY-2000	00-10-287A	02
10	ID	CASSIA COUNTY	1600410100B	21-JUN-2000	00-10-326A	02
10	ID	EAGLE, CITY OF	16001C0153G	23-FEB-2000	00-10-072P	05
10	ID	EAGLE, CITY OF	16001C0154G	23-FEB-2000	00-10-072P	05
10	ID	EAGLE, CITY OF	16001C0153G	25-APR-2000	00-10-179A	01
10	ID	EAGLE, CITY OF	16001C0153G	09-JUN-2000	00-10-289P	06
10	ID	FREMONT COUNTY	1600610125B	29-FEB-2000	00-10-157A	02
10	ID	GARDEN CITY, CITY OF	16001C0166G	21-JUN-2000	00-10-334A	02
10	ID	KOOTENAI COUNTY	1600760125C	28-JUN-2000	00-10-336A	02
10	ID	MERIDIAN, CITY OF	16001C0144G	09-FEB-2000	00-10-118A	02
10	ID	MERIDIAN, CITY OF	16001C0143G	20-APR-2000	00-10-237A	02
10	ID	MINIDOKA COUNTY	160201B	15-MAY-2000	00-10-164A	02
10	ID	MOUNTAIN HOME, CITY OF	1600580005C	14-JUN-2000	00-10-314A	02
10	ID	MOUNTAIN HOME, CITY OF	1602120605C	14-JUN-2000	00-10-314A	02
10	ID	SANDPOINT,CITY OF	1600250001C	07-MAR-2000	00-10-110A	02
10	ID	SUN VALLEY, CITY OF	1600240453D	21-MAR-2000	00-10-199A	02
10	ID	TWIN FALLS, CITY OF	1601200005B	14-JUN-2000	00-10-286A	02
10	ID	VALLEY COUNTY	1602200325A	09-MAY-2000	00-10-001A	02
10	ID	VALLEY COUNTY	1602200325A	24-FEB-2000	00-10-148A	02
10	ID	WASHINGTON COUNTY	1602210320B	01-FEB-2000	00-10-093A	02
10	OR	ALBANY, CITY OF	4101370001F	12-JAN-2000	00-10-066A	02
10	OR	ALBANY, CITY OF	4101370001F	24-FEB-2000	00-10-151A	02
10	OR	ALBANY, CITY OF	4101370005F	09-JUN-2000	00-10-331A	02
10	OR	ASHLAND, CITY OF	4100900003B	28-JUN-2000	00-10-229A	02
10	OR	ATHENA, CITY OF	4102060001D	27-MAR-2000	97-10-329V	19
10	OR	BAY CITY, CITY OF	4101970001B	21-MAR-2000	00-10-169A	02
10	OR	BEAVERTON, CITY OF	4102400002C	25-MAY-2000	99-10-610P	05
10	OR	BEAVERTON, CITY OF	4102400003C	25-MAY-2000	99-10-610P	05
10	OR	CANNON BEACH, CITY OF	4100290005B	28-JUN-2000	99-10-518P	08
10	OR	CLACKAMAS COUNTY	4155880020A	13-MAR-2000	00-10-060A	02
10	OR	CLACKAMAS COUNTY	4155880030A	26-JUN-2000	00-10-173P	05
10	OR	CLACKAMAS COUNTY	4155880055B	09-MAY-2000	00-10-257A	02
10	OR	COLUMBIA COUNTY	41009C0425C	28-JAN-2000	00-10-114A	02
10	OR	COLUMBIA COUNTY	41009C0450C	18-APR-2000	00-10-234A	02
10	OR	CRESWELL, CITY OF	41039C1661F	14-JUN-2000	00-10-094A	01
10	OR	DEPOE BAY, CITY OF	4102830001B	21-JAN-2000	00-10-098A	02
10	OR	DOUGLAS COUNTY	4100590940A	25-MAY-2000	00-10-120A	02
10	OR	DOUGLAS COUNTY	4100591135A	08-FEB-2000	00-10-133A	02
10	OR	DOUGLAS COUNTY	4100590325A	24-FEB-2000	00-10-147A	02
10	OR	DOUGLAS COUNTY	4100590930A	21-MAR-2000	00-10-200A	02
10	OR	DOUGLAS COUNTY	4100590550A	09-JUN-2000	00-10-313A	02
10	OR	EAGLE POINT, CITY OF	4100930001B	29-FEB-2000	99-10-588A	01
10	OR	EUGENE, CITY OF	41039C1104F	10-JAN-2000	00-10-053A	01
10	OR	EUGENE, CITY OF	41039C1136F	04-FEB-2000	00-10-090A	02
10	OR	EUGENE, CITY OF	41039C1107F	29-FEB-2000	00-10-106A	02
10	OR	EUGENE, CITY OF	41039C0619F	31-MAY-2000	00-10-155A	02
10	OR	EUGENE, CITY OF	41039C1126F	27-MAR-2000	00-10-186A	02
10	OR	EUGENE, CITY OF	41039C1106F	07-MAR-2000	00-10-189A	02
10	OR	EUGENE, CITY OF	41039C1107F	07-MAR-2000	00-10-189A	02
10	OR	EUGENE, CITY OF	41039C1126F	21-MAR-2000	00-10-196A	02
10	OR	EUGENE, CITY OF	41039C1107F	28-MAR-2000	00-10-206A	02
10	OR	EUGENE, CITY OF	41039C1107F	03-MAY-2000	00-10-243A	02
10	OR	EUGENE, CITY OF	41039C1106F	28-APR-2000	00-10-252A	02

Region	State	Community	Map panel	Determination date	Case No.	Type
10	OR	EUGENE, CITY OF	41039C1128F	09-MAY-2000	00-10-265A	02
10	OR	EUGENE, CITY OF	41039C1107F	30-MAY-2000	00-10-270A	02
10	OR	EUGENE, CITY OF	41039C1136F	09-JUN-2000	00-10-275A	02
10	OR	EUGENE, CITY OF	41039C1109F	21-JUN-2000	00-10-332A	02
10	OR	EUGENE, CITY OF	41039C1137F	28-JUN-2000	00-10-338A	02
10	OR	EUGENE, CITY OF	41039C1136F	28-JUN-2000	00-10-348A	02
10	OR	FAIRVIEW, CITY OF	4101800001D	05-JUN-2000	00-10-267A	01
10	OR	FLORENCE, CITY OF	41039C1427F	22-FEB-2000	00-10-123A	02
10	OR	FLORENCE, CITY OF	41039C0945F	12-APR-2000	00-10-227A	02
10	OR	FLORENCE, CITY OF	41039C1427F	09-MAY-2000	00-10-264A	02
10	OR	FLORENCE, CITY OF	41039C1427F	21-JUN-2000	00-10-273A	02
10	OR	GRANT COUNTY	4100740650B	07-APR-2000	00-10-188A	02
10	OR	JACKSON COUNTY	4155890412B	11-JAN-2000	00-10-089A	02
10	OR	JACKSON COUNTY	4155890406B	31-MAY-2000	00-10-305A	02
10	OR	JOSEPHINE COUNTY	4155900237D	15-MAR-2000	00-10-096A	17
10	OR	JOSEPHINE COUNTY	4155900237D	24-MAY-2000	00-10-205A	02
10	OR	KEIZER, CITY OF	41047C0193G	16-FEB-2000	00-10-136A	02
10	OR	KEIZER, CITY OF	41047C0332G	22-FEB-2000	00-10-139A	02
10	OR	KEIZER, CITY OF	41047C0193G	14-JUN-2000	00-10-306A	02
10	OR	KEIZER, CITY OF	41047C0188G	20-JAN-2000	99-10-624V	19
10	OR	KEIZER, CITY OF	41047C0189G	20-JAN-2000	99-10-624V	19
10	OR	KEIZER, CITY OF	41047C0331G	20-JAN-2000	99-10-624V	19
10	OR	KEIZER, CITY OF	41047C0332G	20-JAN-2000	99-10-624V	19
10	OR	LANE COUNTY	41039C2135F	22-FEB-2000	00-10-027A	02
10	OR	LANE COUNTY	41039C1165F	05-JAN-2000	00-10-058A	02
10	OR	LANE COUNTY	41039C1107F	30-MAR-2000	00-10-132A	02
10	OR	LANE COUNTY	41039C1107F	24-MAR-2000	00-10-137A	02
10	OR	LANE COUNTY	41039C1107F	24-FEB-2000	00-10-146A	02
10	OR	LANE COUNTY	41039C1660F	02-MAR-2000	00-10-163A	02
10	OR	LANE COUNTY	41039C1660F	02-MAR-2000	00-10-165A	02
10	OR	LANE COUNTY	41039C1106F	03-MAR-2000	00-10-167A	02
10	OR	LANE COUNTY	41039C0790F	07-MAR-2000	00-10-174A	02
10	OR	LANE COUNTY	41039C0600F	07-MAR-2000	00-10-176A	02
10	OR	LANE COUNTY	41039C1107F	29-MAR-2000	00-10-193A	02
10	OR	LANE COUNTY	41039C0615F	04-APR-2000	00-10-219A	02
10	OR	LANE COUNTY	41039C0620F	28-MAR-2000	00-10-221A	02
10	OR	LANE COUNTY	41039C2400F	28-APR-2000	00-10-251A	02
10	OR	LANE COUNTY	41039C1105F	14-JUN-2000	00-10-317A	02
10	OR	LANE COUNTY	41039C0700F	21-JUN-2000	00-10-340A	02
10	OR	LANE COUNTY	41039C2085F	28-JUN-2000	00-10-342A	02
10	OR	LANE COUNTY	41039C0550F	30-JUN-2000	00-10-344A	02
10	OR	LANE COUNTY	41039C1107F	28-JUN-2000	00-10-346A	02
10	OR	LANE COUNTY	41039C1104F	10-JAN-2000	99-10-583A	01
10	OR	LINCOLN CITY, CITY OF	4101300001C	10-JAN-2000	00-10-085A	02
10	OR	LINCOLN CITY, CITY OF	4101300001C	21-APR-2000	00-10-149A	17
10	OR	LINCOLN CITY, CITY OF	4101300001C	25-MAY-2000	00-10-177A	02
10	OR	LINCOLN CITY, CITY OF	4101300001C	11-MAY-2000	00-10-254A	02
10	OR	LINCOLN CITY, CITY OF	4101300001C	12-MAY-2000	00-10-279A	02
10	OR	LINCOLN CITY, CITY OF	4101300001C	16-MAR-2000	98-10-423P	06
10	OR	LINCOLN COUNTY	4101290075B	16-FEB-2000	00-10-131A	02
10	OR	LINN COUNTY	4101360380B	27-MAR-2000	00-10-236A	02
10	OR	LINN COUNTY	4101360350B	21-JUN-2000	00-10-325A	02
10	OR	MADRAS, CITY OF	4101030001C	02-FEB-2000	00-10-117A	02
10	OR	MARION COUNTY	41047C0275G	17-APR-2000	99-10-543A	02
10	OR	MARION COUNTY	41047C0050G	20-JAN-2000	99-10-624V	19
10	OR	MARION COUNTY	41047C0132G	20-JAN-2000	99-10-624V	19
10	OR	MARION COUNTY	41047C0225G	20-JAN-2000	99-10-624V	19
10	OR	MARION COUNTY	41047C0339G	20-JAN-2000	99-10-624V	19
10	OR	MARION COUNTY	41047C0351G	20-JAN-2000	99-10-624V	19
10	OR	MARION COUNTY	41047C0375G	20-JAN-2000	99-10-624V	19
10	OR	MARION COUNTY	41047C0400G	20-JAN-2000	99-10-624V	19
10	OR	MARION COUNTY	41047C0676G	20-JAN-2000	99-10-624V	19
10	OR	MARION COUNTY	41047C0677G	20-JAN-2000	99-10-624V	19
10	OR	MARION COUNTY	41047C0775G	20-JAN-2000	99-10-624V	19
10	OR	MARION COUNTY	41047C1000G	20-JAN-2000	99-10-624V	19
10	OR	MEDFORD, CITY OF	4100960003C	12-APR-2000	00-10-166A	02
10	OR	MEDFORD, CITY OF	4100960007B	02-JUN-2000	00-10-301A	02
10	OR	MILWAUKIE, CITY OF	4100190001B	26-JUN-2000	00-10-173P	05
10	OR	MILWAUKIE, CITY OF	4100190002B	26-JUN-2000	00-10-173P	05
10	OR	MULTNOMAH COUNTY	4101790379B	26-JUN-2000	00-10-173P	05
10	OR	MULTNOMAH COUNTY	4101790381B	26-JUN-2000	00-10-173P	05
10	OR	MULTNOMAH COUNTY	4101790382B	26-JUN-2000	00-10-173P	05
10	OR	MULTNOMAH COUNTY	4101790401B	26-JUN-2000	00-10-173P	05

Region	State	Community	Map panel	Determination date	Case No.	Type
10	OR	NORTH PLAINS, CITY OF	4102700001B	30-MAY-2000	00-10-293A	02
10	OR	PHILOMATH, CITY OF	4100110001B	21-JAN-2000	00-10-097A	01
10	OR	POLK COUNTY	41053C0010C	14-FEB-2000	00-10-124A	02
10	OR	POLK COUNTY	41053C0010C	09-MAY-2000	00-10-258A	02
10	OR	PORTLAND, CITY OF	4101830047D	26-JUN-2000	00-10-173P	06
10	OR	PORTLAND, CITY OF	4101830048C	26-JUN-2000	00-10-173P	06
10	OR	PORTLAND, CITY OF	4101830049D	26-JUN-2000	00-10-173P	06
10	OR	PORTLAND, CITY OF	4101830051C	26-JUN-2000	00-10-173P	06
10	OR	PORTLAND, CITY OF	4101830052C	26-JUN-2000	00-10-173P	06
10	OR	ROSEBURG, CITY OF	4100670005E	12-JAN-2000	00-10-063A	02
10	OR	ROSEBURG, CITY OF	4100670005E	09-FEB-2000	00-10-119A	02
10	OR	ROSEBURG, CITY OF	4100670005E	29-FEB-2000	00-10-156A	02
10	OR	ROSEBURG, CITY OF	4100670005E	10-APR-2000	00-10-228A	02
10	OR	ROSEBURG, CITY OF	4100670005E	09-JUN-2000	00-10-321A	02
10	OR	ROSEBURG, CITY OF	4100670005E	28-JUN-2000	00-10-341A	02
10	OR	SALEM, CITY OF	41047C0342G	16-JUN-2000	00-10-315A	02
10	OR	SALEM, CITY OF	41047C0187G	20-JAN-2000	99-10-624V	19
10	OR	SALEM, CITY OF	41047C0329G	20-JAN-2000	99-10-624V	19
10	OR	SALEM, CITY OF	41047C0333G	20-JAN-2000	99-10-624V	19
10	OR	SALEM, CITY OF	41047C0337G	20-JAN-2000	99-10-624V	19
10	OR	SALEM, CITY OF	41047C0342G	20-JAN-2000	99-10-624V	19
10	OR	SALEM, CITY OF	41047C0344G	20-JAN-2000	99-10-624V	19
10	OR	SALEM, CITY OF	41047C0351G	20-JAN-2000	99-10-624V	19
10	OR	SALEM, CITY OF	41047C0657G	20-JAN-2000	99-10-624V	19
10	OR	SCIO, CITY OF	4101440001A	05-JAN-2000	00-10-077A	02
10	OR	SHERIDAN, CITY OF	4102570002C	07-FEB-2000	00-10-079A	02
10	OR	SHERIDAN, CITY OF	4102570002C	03-APR-2000	00-10-192A	02
10	OR	SILVERTON, CITY OF	41047C0243G	20-JAN-2000	99-10-624V	19
10	OR	SPRINGFIELD, CITY OF	41039C1134F	07-JAN-2000	00-10-068A	02
10	OR	TIGARD, CITY OF	4102760003B	19-APR-2000	00-10-209A	01
10	OR	TROUTDALE, CITY OF	4101840005D	02-MAY-2000	00-10-222A	01
10	OR	TUALATIN, CITY OF	4102770002D	28-JAN-2000	00-10-086A	01
10	OR	TUALATIN, CITY OF	4102770002D	10-JAN-2000	00-10-088A	02
10	OR	WASHINGTON COUNTY	4102380368B	21-MAR-2000	00-10-202A	02
10	OR	WASHINGTON COUNTY	4102380342B	03-MAY-2000	00-10-223A	02
10	OR	WASHINGTON COUNTY	4102380502C	25-MAY-2000	99-10-610P	05
10	OR	WASHINGTON COUNTY	4102380506C	25-MAY-2000	99-10-610P	05
10	OR	WOODBURN, CITY OF	41047C0138G	20-JAN-2000	99-10-624V	19
10	WA	ABERDEEN, CITY OF	5300580002B	10-MAR-2000	00-10-181A	02
10	WA	BRIER, CITY OF	53061C1317E	30-JUN-2000	00-10-280A	02
10	WA	CHEHALIS, CITY OF	5301040001B	21-JAN-2000	00-10-122A	02
10	WA	CHELAN COUNTY	5300150775B	11-FEB-2000	99-10-145P	05
10	WA	EAST WENATCHEE, TOWN OF	5300360535A	14-APR-2000	00-10-194P	05
10	WA	EAST WENATCHEE, TOWN OF	5300380001C	14-APR-2000	00-10-194P	05
10	WA	FERNDALE, TOWN OF	5302010005B	22-JUN-2000	00-10-129A	01
10	WA	HOQUIAM, CITY OF	5300610005B	02-MAR-2000	00-10-172A	02
10	WA	KING COUNTY	53033C1225F	22-FEB-2000	00-10-022A	02
10	WA	KING COUNTY	53033C1280F	14-FEB-2000	00-10-102A	02
10	WA	KING COUNTY	53033C0040F	04-APR-2000	00-10-182A	02
10	WA	KING COUNTY	53033C0063G	25-APR-2000	00-10-218A	02
10	WA	KING COUNTY	53033C1259F	17-APR-2000	00-10-232A	02
10	WA	KING COUNTY	53033C0615F	05-JAN-2000	99-10-576A	02
10	WA	KING COUNTY	53033C0063G	27-MAR-2000	99-10-626V	19
10	WA	KING COUNTY	53033C0068G	27-MAR-2000	99-10-626V	19
10	WA	KING COUNTY	53033C0360G	27-MAR-2000	99-10-626V	19
10	WA	KING COUNTY	53033C0360G	27-MAR-2000	99-10-626V	19
10	WA	KITSAP COUNTY	5300920310B	12-MAY-2000	00-10-246A	02
10	WA	KITTITAS COUNTY	5300950261B	21-MAR-2000	00-10-109A	17
10	WA	KITTITAS COUNTY	5300950229B	29-MAR-2000	00-10-140A	17
10	WA	KITTITAS COUNTY	5300950409B	08-MAY-2000	00-10-235A	02
10	WA	LAKE STEVENS, CITY OF	53061C0743E	04-MAY-2000	00-10-113A	02
10	WA	LAKE STEVENS, CITY OF	53061C0743E	09-MAY-2000	00-10-249A	02
10	WA	LEWIS COUNTY	5301020360B	24-FEB-2000	00-10-144A	02
10	WA	LEWIS COUNTY	5301020460B	09-MAR-2000	00-10-187A	02
10	WA	MASON COUNTY	5301150200C	18-APR-2000	00-10-160A	02
10	WA	MOUNTLAKE TERRACE, CITY OF	53061C1315E	09-MAY-2000	00-10-268A	02
10	WA	OAK HARBOR, CITY OF	53029C0120D	09-FEB-2000	00-R10-001	02
10	WA	OKANOGAN COUNTY	5301170675D	12-APR-2000	00-10-084P	06
10	WA	OKANOGAN COUNTY	5301171100B	01-MAR-2000	00-10-158A	02
10	WA	OLYMPIA, CITY OF	5301910005B	09-JUN-2000	00-10-292A	02
10	WA	OROVILLE, TOWN OF	5301210001C	29-MAR-2000	00-10-170A	02
10	WA	PACIFIC COUNTY	5301260053A	21-JUN-2000	00-10-180A	02
10	WA	PEND OREILLE COUNTY	530131B	17-MAY-2000	00-10-288A	02

Region	State	Community	Map panel	Determination date	Case No.	Type
10	WA	PULLMAN, CITY OF	5302120001C	23-FEB-2000	00-10-143A	02
10	WA	RAYMOND, CITY OF	5301290005B	19-MAY-2000	00-10-295A	02
10	WA	REDMOND, CITY OF	53033C0370F	12-JUN-2000	00-10-224P	06
10	WA	REDMOND, CITY OF	53033C0370F	15-MAR-2000	00-10-226A	01
10	WA	REDMOND, CITY OF	53033C0370F	20-APR-2000	00-10-239A	02
10	WA	SAN JUAN COUNTY	5301490003B	27-JAN-2000	00-10-108A	02
10	WA	SEATTLE, CITY OF	53033C0331F	29-FEB-2000	00-10-059P	06
10	WA	SKAGIT COUNTY	5301510225C	07-APR-2000	00-10-083P	05
10	WA	SKAGIT COUNTY	5301510235D	16-FEB-2000	00-10-112A	02
10	WA	SKAGIT COUNTY	5301510425C	24-MAY-2000	00-10-298A	02
10	WA	SKAGIT COUNTY	5301510225C	09-JUN-2000	00-10-300A	02
10	WA	SKAGIT COUNTY	5301510260C	24-MAY-2000	00-10-304A	02
10	WA	SKAGIT COUNTY	5301510235D	14-JUN-2000	00-10-324A	02
10	WA	SKAGIT COUNTY	5301510235D	14-JUN-2000	00-10-327A	02
10	WA	SKAGIT COUNTY	5301510330C	13-JAN-2000	99-10-617A	02
10	WA	SNOHOMISH COUNTY	53061C0760E	26-JUN-2000	00-10-135A	17
10	WA	SNOHOMISH COUNTY	53061C0743E	21-MAR-2000	00-10-201A	02
10	WA	SNOHOMISH COUNTY	53061C0710E	10-MAR-2000	00-10-207A	02
10	WA	SNOHOMISH COUNTY	53061C1055E	31-MAR-2000	00-10-215A	02
10	WA	SNOHOMISH COUNTY	53061C0695E	08-MAY-2000	00-10-259A	02
10	WA	SNOHOMISH COUNTY	53061C0715E	28-JUN-2000	00-10-303A	02
10	WA	SNOHOMISH COUNTY	53061C0715E	21-JUN-2000	00-10-335A	02
10	WA	SPOKANE COUNTY	5301740277B	02-JUN-2000	00-10-064A	02
10	WA	SPOKANE COUNTY	5301740303C	02-MAR-2000	00-10-138A	02
10	WA	SPOKANE COUNTY	5301740294C	31-MAR-2000	00-10-191A	02
10	WA	SPOKANE COUNTY	5301740294C	04-MAY-2000	00-10-216A	02
10	WA	SULTAN, TOWN OF	53061C1406E	27-JAN-2000	00-10-099A	02
10	WA	SULTAN, TOWN OF	53061C1402E	12-MAY-2000	00-10-105A	01
10	WA	SULTAN, TOWN OF	53061C1406E	08-FEB-2000	00-10-107A	02
10	WA	SULTAN, TOWN OF	53061C1406E	10-MAY-2000	00-10-278A	02
10	WA	THURSTON COUNTY	5301880282C	03-APR-2000	00-10-220A	02
10	WA	YAKIMA COUNTY	5302171036B	07-APR-2000	00-10-231A	02

Region	State	Community	Panel	Panel date
01	MAINE	DALLAS PLANTATION	2304550025B	23-FEB-2000
01	MAINE	STARKS, TOWN OF	2300620005C	20-APR-2000
01	MAINE	STARKS, TOWN OF	2300620006C	20-APR-2000
01	MAINE	STARKS, TOWN OF	2300620008C	20-APR-2000
01	MAINE	STARKS, TOWN OF	2303720000	20-APR-2000
01	MAINE	STARKS, TOWN OF	2303720012C	20-APR-2000
01	MAINE	STARKS, TOWN OF	2303720014C	20-APR-2000
01	MAINE	STARKS, TOWN OF	2303720016C	20-APR-2000
01	MAINE	TEMPLE, TOWN OF	2300620000	20-APR-2000
01	MAINE	TEMPLE, TOWN OF	2300620002C	20-APR-2000
01	MAINE	TEMPLE, TOWN OF	2300620005C	20-APR-2000
01	MAINE	TEMPLE, TOWN OF	2300620006C	20-APR-2000
01	MAINE	TEMPLE, TOWN OF	2300620008C	20-APR-2000
01	MAINE	TEMPLE, TOWN OF	2300620015C	20-APR-2000
01	MAINE	TEMPLE, TOWN OF	2300620016C	20-APR-2000
01	MAINE	TEMPLE, TOWN OF	2300620018C	20-APR-2000
01	MASSACHUSETTS	MILLBURY, TOWN OF	2503180000	07-JAN-2000
01	MASSACHUSETTS	MILLBURY, TOWN OF	2503180001C**	07-JAN-2000
01	MASSACHUSETTS	MILLBURY, TOWN OF	2503180002C	07-JAN-2000
01	MASSACHUSETTS	MILLBURY, TOWN OF	2503180003C**	07-JAN-2000
01	MASSACHUSETTS	MILLBURY, TOWN OF	2503180004C**	07-JAN-2000
01	MASSACHUSETTS	MILLBURY, TOWN OF	2503180006C	07-JAN-2000
01	NEW HAMPSHIRE	BRENTWOOD, TOWN OF	3301250000	04-MAY-2000
01	NEW HAMPSHIRE	BRENTWOOD, TOWN OF	3301250002C	04-MAY-2000
01	NEW HAMPSHIRE	BRENTWOOD, TOWN OF	3301250003C	04-MAY-2000
01	NEW HAMPSHIRE	BRENTWOOD, TOWN OF	3301250004C	04-MAY-2000
01	NEW HAMPSHIRE	CHARLESTOWN, TOWN OF	3301530000	04-MAY-2000
01	NEW HAMPSHIRE	CHARLESTOWN, TOWN OF	3301530005D	04-MAY-2000
01	NEW HAMPSHIRE	CHARLESTOWN, TOWN OF	3301530006D	04-MAY-2000
01	NEW HAMPSHIRE	CHARLESTOWN, TOWN OF	3301530010D	04-MAY-2000
01	NEW HAMPSHIRE	CHARLESTOWN, TOWN OF	3301530015D	04-MAY-2000
01	NEW HAMPSHIRE	LINCOLN, TOWN OF	3300620000	20-APR-2000
01	NEW HAMPSHIRE	LINCOLN, TOWN OF	3300620020D	20-APR-2000
01	NEW HAMPSHIRE	LINCOLN, TOWN OF	3300620035D	20-APR-2000
01	NEW HAMPSHIRE	LINCOLN, TOWN OF	3300620040D	20-APR-2000
01	NEW HAMPSHIRE	WALPOLE, TOWN OF	3300270000	04-MAY-2000
01	NEW HAMPSHIRE	WALPOLE, TOWN OF	3300270005B	04-MAY-2000

Region	State	Community	Panel	Panel date
01	NEW HAMPSHIRE	WALPOLE, TOWN OF	3300270010B	04-MAY-2000
01	NEW HAMPSHIRE	WOODSTOCK, TOWN OF	3300790000	06-APR-2000
01	NEW HAMPSHIRE	WOODSTOCK, TOWN OF	3300790020C	06-APR-2000
01	RHODE ISLAND	PROVIDENCE, CITY OF (PROVIDENCE)	4454060000	06-JUN-2000
01	RHODE ISLAND	PROVIDENCE, CITY OF (PROVIDENCE)	4454060001F**	06-JUN-2000
01	RHODE ISLAND	PROVIDENCE, CITY OF (PROVIDENCE)	4454060002F**	06-JUN-2000
01	RHODE ISLAND	PROVIDENCE, CITY OF (PROVIDENCE)	4454060004F**	06-JUN-2000
01	RHODE ISLAND	PROVIDENCE, CITY OF (PROVIDENCE)	4454060005F	06-JUN-2000
01	RHODE ISLAND	PROVIDENCE, CITY OF (PROVIDENCE)	4454060006F**	06-JUN-2000
01	VERMONT	WOLCOTT, TOWN OF	5000680000	06-JUN-2000
01	VERMONT	WOLCOTT, TOWN OF	5000680011C	06-JUN-2000
01	VERMONT	WOLCOTT, TOWN OF	5000680012C	06-JUN-2000
01	VERMONT	WOLCOTT, TOWN OF	5000680013C	06-JUN-2000
01	VERMONT	WOLCOTT, TOWN OF	5000680014C	06-JUN-2000
01	VERMONT	WOLCOTT, TOWN OF	5000680020C	06-JUN-2000
01	VERMONT	WOLCOTT, TOWN OF	5000680026C	06-JUN-2000
01	VERMONT	WOLCOTT, TOWN OF	5000680027C	06-JUN-2000
02	NEW JERSEY	BARNEGAT, TOWNSHIP OF (OCEAN COUNTY).	3403960000	20-JUN-2000
02	NEW JERSEY	BARNEGAT, TOWNSHIP OF (OCEAN COUNTY).	3403960015D**	20-JUN-2000
02	NEW JERSEY	BARNEGAT, TOWNSHIP OF (OCEAN COUNTY).	3403960020D**	20-JUN-2000
02	NEW YORK	CLARKSTOWN, TOWN OF (ROCKLAND COUNTY).	3603790003E**	18-MAY-2000
02	NEW YORK	CLARKSTOWN, TOWN OF (ROCKLAND COUNTY).	3603790004**	18-MAY-2000
02	NEW YORK	CLARKSTOWN, TOWN OF (ROCKLAND COUNTY).	3603790005E**	18-MAY-2000
02	NEW YORK	CLARKSTOWN, TOWN OF (ROCKLAND COUNTY).	3603790006F**	18-MAY-2000
02	NEW YORK	CLARKSTOWN, TOWN OF (ROCKLAND COUNTY).	3603790007E	18-MAY-2000
02	NEW YORK	CLARKSTOWN, TOWN OF (ROCKLAND COUNTY).	3603790008E**	18-MAY-2000
02	NEW YORK	CLARKSTOWN, TOWN OF (ROCKLAND COUNTY).	3603790010E	18-MAY-2000
02	NEW YORK	CLARKSTOWN, TOWN OF (ROCKLAND COUNTY).	3603790011E**	18-MAY-2000
02	NEW YORK	CLARKSTOWN, TOWN OF (ROCKLAND COUNTY).	3603790012E**	18-MAY-2000
02	NEW YORK	CLARKSTOWN, TOWN OF (ROCKLAND COUNTY).	3603790014E	18-MAY-2000
02	NEW YORK	CLARKSTOWN, TOWN OF (ROCKLAND COUNTY).	3603790015E**	18-MAY-2000
02	NEW YORK	CLARKSTOWN, TOWN OF (ROCKLAND COUNTY).	3603790016E**	18-MAY-2000
02	NEW YORK	CLARKSTOWN, TOWN OF (ROCKLAND COUNTY).	3606790000	18-MAY-2000
02	NEW YORK	COOPERSTOWN, VILLAGE OF	3606650001D	04-MAY-2000
02	NEW YORK	ELLICOTTVILLE, TOWN OF	3600690000	19-JAN-2000
02	NEW YORK	ELLICOTTVILLE, TOWN OF	3600690031D	19-JAN-2000
02	NEW YORK	ELLICOTTVILLE, TOWN OF	3600690032D	19-JAN-2000
02	NEW YORK	GREENWICH, VILLAGE OF	3608870001C	04-MAY-2000
02	NEW YORK	LOWVILLE, TOWN OF (LEWIS COUNTY)	3615580000	20-JUN-2000
02	NEW YORK	LOWVILLE, TOWN OF (LEWIS COUNTY)	3615580005C	20-JUN-2000
02	NEW YORK	LOWVILLE, TOWN OF (LEWIS COUNTY)	3615580010C	20-JUN-2000
02	NEW YORK	LOWVILLE, TOWN OF (LEWIS COUNTY)	3615580015C	20-JUN-2000
02	NEW YORK	LOWVILLE, VILLAGE OF (LEWIS COUNTY)	3615580001C	20-JUN-2000
02	NEW YORK	NEW BREMEN, TOWN OF	3603730000	04-MAY-2000
02	NEW YORK	NEW BREMEN, TOWN OF	3603730005C	04-MAY-2000
02	NEW YORK	NEW BREMEN, TOWN OF	3603730010C	04-MAY-2000
02	NEW YORK	NEW BREMEN, TOWN OF	3603730020C	04-MAY-2000
02	NEW YORK	NEW BREMEN, TOWN OF	3603730025C	04-MAY-2000
02	NEW YORK	NEW YORK MILLS, VILLAGE OF	3605370001C	04-MAY-2000
02	NEW YORK	PAINTED POST, VILLAGE OF (STEUBEN COUNTY).	3607790001E	18-MAY-2000
02	NEW YORK	WHITESBORO, VILLAGE OF	365660001C	04-MAY-2000
02	NEW YORK	WHITESTOWN, TOWN OF	3605670000	04-MAY-2000
02	NEW YORK	WHITESTOWN, TOWN OF	365670004C	04-MAY-2000
02	NEW YORK	WHITESTOWN, TOWN OF	365670008C	04-MAY-2000
02	NEW YORK	YORKVILLE, VILLAGE OF	365680001C	04-MAY-2000
03	MARYLAND	ABERDEEN, TOWN OF HARFORD COUNTY	24025C0000	07-JAN-2000
03	MARYLAND	ABERDEEN, TOWN OF HARFORD COUNTY	24025C0187D	07-JAN-2000

Region	State	Community	Panel	Panel date
03	MARYLAND	ABERDEEN, TOWN OF HARFORD COUNTY	24025C0189D	07-JAN-2000
03	MARYLAND	ABERDEEN, TOWN OF HARFORD COUNTY	24025C0191D	07-JAN-2000
03	MARYLAND	ABERDEEN, TOWN OF HARFORD COUNTY	24025C0193D	07-JAN-2000
03	MARYLAND	ABERDEEN, TOWN OF HARFORD COUNTY	24025C0194D	07-JAN-2000
03	MARYLAND	ABERDEEN, TOWN OF HARFORD COUNTY	24025C0277D	07-JAN-2000
03	MARYLAND	ABERDEEN, TOWN OF HARFORD COUNTY	24025C0281D	07-JAN-2000
03	MARYLAND	BEL AIR, TOWN OF HARFORD COUNTY	24025C0000	07-JAN-2000
03	MARYLAND	BEL AIR, TOWN OF HARFORD COUNTY	24025C0161D	07-JAN-2000
03	MARYLAND	BEL AIR, TOWN OF HARFORD COUNTY	24025C0162D	07-JAN-2000
03	MARYLAND	BEL AIR, TOWN OF HARFORD COUNTY	24025C0163D	07-JAN-2000
03	MARYLAND	BEL AIR, TOWN OF HARFORD COUNTY	24025C0164D	07-JAN-2000
03	MARYLAND	HARFORD COUNTY *	24025C0000D	07-JAN-2000
03	MARYLAND	HARFORD COUNTY *	24025C0004D	07-JAN-2000
03	MARYLAND	HARFORD COUNTY *	24025C0008D	07-JAN-2000
03	MARYLAND	HARFORD COUNTY *	24025C0015D	07-JAN-2000
03	MARYLAND	HARFORD COUNTY *	24025C0016D	07-JAN-2000
03	MARYLAND	HARFORD COUNTY *	24025C0017D	07-JAN-2000
03	MARYLAND	HARFORD COUNTY *	24025C0020D	07-JAN-2000
03	MARYLAND	HARFORD COUNTY *	24025C0035D	07-JAN-2000
03	MARYLAND	HARFORD COUNTY *	24025C0036D	07-JAN-2000
03	MARYLAND	HARFORD COUNTY *	24025C0037D	07-JAN-2000
03	MARYLAND	HARFORD COUNTY *	24025C0038D	07-JAN-2000
03	MARYLAND	HARFORD COUNTY *	24025C0039D	07-JAN-2000
03	MARYLAND	HARFORD COUNTY *	24025C0041D	07-JAN-2000
03	MARYLAND	HARFORD COUNTY *	24025C0042D	07-JAN-2000
03	MARYLAND	HARFORD COUNTY *	24025C0043D	07-JAN-2000
03	MARYLAND	HARFORD COUNTY *	24025C0044D	07-JAN-2000
03	MARYLAND	HARFORD COUNTY *	24025C0055D	07-JAN-2000
03	MARYLAND	HARFORD COUNTY *	24025C0060D	07-JAN-2000
03	MARYLAND	HARFORD COUNTY *	24025C0063D	07-JAN-2000
03	MARYLAND	HARFORD COUNTY *	24025C0064D	07-JAN-2000
03	MARYLAND	HARFORD COUNTY *	24025C0065D	07-JAN-2000
03	MARYLAND	HARFORD COUNTY *	24025C0070D	07-JAN-2000
03	MARYLAND	HARFORD COUNTY *	24025C0080D	07-JAN-2000
03	MARYLAND	HARFORD COUNTY *	24025C0090D	07-JAN-2000
03	MARYLAND	HARFORD COUNTY *	24025C0095D	07-JAN-2000
03	MARYLAND	HARFORD COUNTY *	24025C0105D	07-JAN-2000
03	MARYLAND	HARFORD COUNTY *	24025C0110D	07-JAN-2000
03	MARYLAND	HARFORD COUNTY *	24025C0120D	07-JAN-2000
03	MARYLAND	HARFORD COUNTY *	24025C0126D	07-JAN-2000
03	MARYLAND	HARFORD COUNTY *	24025C0127D	07-JAN-2000
03	MARYLAND	HARFORD COUNTY *	24025C0128D	07-JAN-2000
03	MARYLAND	HARFORD COUNTY *	24025C0129D	07-JAN-2000
03	MARYLAND	HARFORD COUNTY *	24025C0132D	07-JAN-2000
03	MARYLAND	HARFORD COUNTY *	24025C0133D	07-JAN-2000
03	MARYLAND	HARFORD COUNTY *	24025C0134D	07-JAN-2000
03	MARYLAND	HARFORD COUNTY *	24025C0136D	07-JAN-2000
03	MARYLAND	HARFORD COUNTY *	24025C0137D	07-JAN-2000
03	MARYLAND	HARFORD COUNTY *	24025C0140D	07-JAN-2000
03	MARYLAND	HARFORD COUNTY *	24025C0141D	07-JAN-2000
03	MARYLAND	HARFORD COUNTY *	24025C0142D	07-JAN-2000
03	MARYLAND	HARFORD COUNTY *	24025C0143D	07-JAN-2000
03	MARYLAND	HARFORD COUNTY *	24025C0144D	07-JAN-2000
03	MARYLAND	HARFORD COUNTY *	24025C0151D	07-JAN-2000
03	MARYLAND	HARFORD COUNTY *	24025C0152D	07-JAN-2000
03	MARYLAND	HARFORD COUNTY *	24025C0153D	07-JAN-2000
03	MARYLAND	HARFORD COUNTY *	24025C0160D	07-JAN-2000
03	MARYLAND	HARFORD COUNTY *	24025C0161D	07-JAN-2000
03	MARYLAND	HARFORD COUNTY *	24025C0162D	07-JAN-2000
03	MARYLAND	HARFORD COUNTY *	24025C0163D	07-JAN-2000
03	MARYLAND	HARFORD COUNTY *	24025C0164D	07-JAN-2000
03	MARYLAND	HARFORD COUNTY *	24025C0166D	07-JAN-2000
03	MARYLAND	HARFORD COUNTY *	24025C0167D	07-JAN-2000
03	MARYLAND	HARFORD COUNTY *	24025C0168D	07-JAN-2000
03	MARYLAND	HARFORD COUNTY *	24025C0169D	07-JAN-2000
03	MARYLAND	HARFORD COUNTY *	24025C0180D	07-JAN-2000
03	MARYLAND	HARFORD COUNTY *	24025C0185D	07-JAN-2000
03	MARYLAND	HARFORD COUNTY *	24025C0186D	07-JAN-2000
03	MARYLAND	HARFORD COUNTY *	24025C0187D	07-JAN-2000
03	MARYLAND	HARFORD COUNTY *	24025C0188D	07-JAN-2000
03	MARYLAND	HARFORD COUNTY *	24025C0189D	07-JAN-2000
03	MARYLAND	HARFORD COUNTY *	24025C0191D	07-JAN-2000
03	MARYLAND	HARFORD COUNTY *	24025C0192D	07-JAN-2000
03	MARYLAND	HARFORD COUNTY *	24025C0193D	07-JAN-2000

Region	State	Community	Panel	Panel date
03	MARYLAND	HARFORD COUNTY *	24025C0194D	07-JAN-2000
03	MARYLAND	HARFORD COUNTY *	24025C0205D	07-JAN-2000
03	MARYLAND	HARFORD COUNTY *	24025C0211D	07-JAN-2000
03	MARYLAND	HARFORD COUNTY *	24025C0212D	07-JAN-2000
03	MARYLAND	HARFORD COUNTY *	24025C0213D	07-JAN-2000
03	MARYLAND	HARFORD COUNTY *	24025C0214D	07-JAN-2000
03	MARYLAND	HARFORD COUNTY *	24025C0220D	07-JAN-2000
03	MARYLAND	HARFORD COUNTY *	24025C0231D	07-JAN-2000
03	MARYLAND	HARFORD COUNTY *	24025C0232D	07-JAN-2000
03	MARYLAND	HARFORD COUNTY *	24025C0235D	07-JAN-2000
03	MARYLAND	HARFORD COUNTY *	24025C0245D	07-JAN-2000
03	MARYLAND	HARFORD COUNTY *	24025C0251D	07-JAN-2000
03	MARYLAND	HARFORD COUNTY *	24025C0252D	07-JAN-2000
03	MARYLAND	HARFORD COUNTY *	24025C0254D	07-JAN-2000
03	MARYLAND	HARFORD COUNTY *	24025C0256D	07-JAN-2000
03	MARYLAND	HARFORD COUNTY *	24025C0257D	07-JAN-2000
03	MARYLAND	HARFORD COUNTY *	24025C0258D	07-JAN-2000
03	MARYLAND	HARFORD COUNTY *	24025C0259D	07-JAN-2000
03	MARYLAND	HARFORD COUNTY *	24025C0261D	07-JAN-2000
03	MARYLAND	HARFORD COUNTY *	24025C0262D	07-JAN-2000
03	MARYLAND	HARFORD COUNTY *	24025C0263D	07-JAN-2000
03	MARYLAND	HARFORD COUNTY *	24025C0264D	07-JAN-2000
03	MARYLAND	HARFORD COUNTY *	24025C0266D	07-JAN-2000
03	MARYLAND	HARFORD COUNTY *	24025C0267D	07-JAN-2000
03	MARYLAND	HARFORD COUNTY *	24025C0270D	07-JAN-2000
03	MARYLAND	HARFORD COUNTY *	24025C0276D	07-JAN-2000
03	MARYLAND	HARFORD COUNTY *	24025C0277D	07-JAN-2000
03	MARYLAND	HARFORD COUNTY *	24025C0278D	07-JAN-2000
03	MARYLAND	HARFORD COUNTY *	24025C0281D	07-JAN-2000
03	MARYLAND	HARFORD COUNTY *	24025C0286D	07-JAN-2000
03	MARYLAND	HARFORD COUNTY *	24025C0300D	07-JAN-2000
03	MARYLAND	HARFORD COUNTY *	24025C0325D	07-JAN-2000
03	MARYLAND	HARFORD COUNTY *	24025C0350D	07-JAN-2000
03	MARYLAND	HARFORD COUNTY *	24025C0375D	07-JAN-2000
03	MARYLAND	HAVRE DE GRACE, CITY OF HARFORD COUNTY.	24025C0000	07-JAN-2000
03	MARYLAND	HAVRE DE GRACE, CITY OF HARFORD COUNTY.	24025C0005D	07-JAN-2000
03	MARYLAND	HAVRE DE GRACE, CITY OF HARFORD COUNTY.	24025C0211D	07-JAN-2000
03	MARYLAND	HAVRE DE GRACE, CITY OF HARFORD COUNTY.	24025C0212D	07-JAN-2000
03	MARYLAND	HAVRE DE GRACE, CITY OF HARFORD COUNTY.	24025C0212D	07-JAN-2000
03	MARYLAND	HAVRE DE GRACE, CITY OF HARFORD COUNTY.	24025C0213D	07-JAN-2000
03	MARYLAND	HAVRE DE GRACE, CITY OF HARFORD COUNTY.	24025C0214D	07-JAN-2000
03	PENNSYLVANIA	CLARKS SUMMIT, BOROUGH OF	4205270001B**	07-JAN-2000
03	PENNSYLVANIA	GREENWICH, TOWNSHIP OF BERKS COUNTY.	42011C0000	07-JAN-2000
03	PENNSYLVANIA	GREENWICH, TOWNSHIP OF BERKS COUNTY.	42011C0195F	07-JAN-2000
03	PENNSYLVANIA	KUTZTOWN, BOROUGH OF	42011C0000	07-JAN-2000
03	PENNSYLVANIA	KUTZTOWN, BOROUGH OF	42011C0194F	07-JAN-2000
03	PENNSYLVANIA	KUTZTOWN, BOROUGH OF	42011C0195F	07-JAN-2000
03	PENNSYLVANIA	LONGSWAMP, TOWNSHIP OF BERKS COUNTY.	42011C0000	07-JAN-2000
03	PENNSYLVANIA	LONGSWAMP, TOWNSHIP OF BERKS COUNTY.	42011C195F	07-JAN-2000
03	PENNSYLVANIA	LONGSWAMP, TOWNSHIP OF BERKS COUNTY.	42011C382F	07-JAN-2000
03	PENNSYLVANIA	MAXATAWNY, TOWNSHIP OF	42011C0000	07-JAN-2000
03	PENNSYLVANIA	MAXATAWNY, TOWNSHIP OF	42011C0194F	07-JAN-2000
03	PENNSYLVANIA	MAXATAWNY, TOWNSHIP OF	42011C0195F	07-JAN-2000
03	PENNSYLVANIA	MAXATAWNY, TOWNSHIP OF	42011C0215F	07-JAN-2000
03	PENNSYLVANIA	MAXATAWNY, TOWNSHIP OF	42011C0382F	07-JAN-2000
03	PENNSYLVANIA	MAXATAWNY, TOWNSHIP OF	42011C0401F	07-JAN-2000
03	PENNSYLVANIA	RICHMOND, TOWNSHIP OF BERKS COUNTY.	42011C0000	07-JAN-2000
03	PENNSYLVANIA	RICHMOND, TOWNSHIP OF BERKS COUNTY.	42011C195F	07-JAN-2000
03	PENNSYLVANIA	RICHMOND, TOWNSHIP OF BERKS COUNTY.	42011C382F	07-JAN-2000

Region	State	Community	Panel	Panel date
03	PENNSYLVANIA	ROCKLAND, TOWNSHIP OF	42011C0000	07-JAN-2000
03	PENNSYLVANIA	ROCKLAND, TOWNSHIP OF	42011C0382F	07-JAN-2000
03	PENNSYLVANIA	ROCKLAND, TOWNSHIP OF	42011C0401F	07-JAN-2000
03	PENNSYLVANIA	SOUTH LONDONDERRY, TOWNSHIP OF LEBANON COUNTY.	4210430000	06-JUN-2000
03	PENNSYLVANIA	SOUTH LONDONDERRY, TOWNSHIP OF LEBANON COUNTY.	4210430003B	06-JUN-2000
03	PENNSYLVANIA	SOUTH LONDONDERRY, TOWNSHIP OF LEBANON COUNTY.	4210430010B**	06-JUN-2000
03	VIRGINIA	BUENA VISTA, CITY OF	51163C0000	06-APR-2000
03	VIRGINIA	BUENA VISTA, CITY OF	51163C0290C	06-APR-2000
03	VIRGINIA	BUENA VISTA, CITY OF	51163C0385C	06-APR-2000
03	VIRGINIA	BUENA VISTA, CITY OF	51163C0401C	06-APR-2000
03	VIRGINIA	BUENA VISTA, CITY OF	51163C0405C	06-APR-2000
03	VIRGINIA	GLASGOW, TOWN OF	51163C0000	06-APR-2000
03	VIRGINIA	GLASGOW, TOWN OF	51163C0389C	06-APR-2000
03	VIRGINIA	GLASGOW, TOWN OF	51163C0390C	06-APR-2000
03	VIRGINIA	GLASGOW, TOWN OF	51163C0393C	06-APR-2000
03	VIRGINIA	GLASGOW, TOWN OF	51163C0452C	06-APR-2000
03	VIRGINIA	GOSHEN, TOWN OF	51163C0000	06-APR-2000
03	VIRGINIA	GOSHEN, TOWN OF	51163C0107C**	06-APR-2000
03	VIRGINIA	GOSHEN, TOWN OF	51163C0126C**	06-APR-2000
03	VIRGINIA	HALIFAX, TOWN OF	5103010001C	19-JAN-2000
03	VIRGINIA	LEXINGTON, CITY OF (INDEPENDENT CITY)	27015C0262C	06-APR-2000
03	VIRGINIA	LEXINGTON, CITY OF (INDEPENDENT CITY)	27015C0264C	06-APR-2000
03	VIRGINIA	LEXINGTON, CITY OF (INDEPENDENT CITY)	27015C0266C	06-APR-2000
03	VIRGINIA	LEXINGTON, CITY OF (INDEPENDENT CITY)	27015C0270C	06-APR-2000
03	VIRGINIA	LEXINGTON, CITY OF (INDEPENDENT CITY)	5100890000	06-APR-2000
03	VIRGINIA	ROCKBRIDGE COUNTY *	51163C0000	06-APR-2000
03	VIRGINIA	ROCKBRIDGE COUNTY *	51163C0025C	06-APR-2000
03	VIRGINIA	ROCKBRIDGE COUNTY *	51163C0050C	06-APR-2000
03	VIRGINIA	ROCKBRIDGE COUNTY *	51163C0075C	06-APR-2000
03	VIRGINIA	ROCKBRIDGE COUNTY *	51163C0107C	06-APR-2000
03	VIRGINIA	ROCKBRIDGE COUNTY *	51163C0125C	06-APR-2000
03	VIRGINIA	ROCKBRIDGE COUNTY *	51163C0126C	06-APR-2000
03	VIRGINIA	ROCKBRIDGE COUNTY *	51163C0130C	06-APR-2000
03	VIRGINIA	ROCKBRIDGE COUNTY *	51163C0135C	06-APR-2000
03	VIRGINIA	ROCKBRIDGE COUNTY *	51163C0140C	06-APR-2000
03	VIRGINIA	ROCKBRIDGE COUNTY *	51163C0145C	06-APR-2000
03	VIRGINIA	ROCKBRIDGE COUNTY *	51163C0175C	06-APR-2000
03	VIRGINIA	ROCKBRIDGE COUNTY *	51163C0190C	06-APR-2000
03	VIRGINIA	ROCKBRIDGE COUNTY *	51163C0200C	06-APR-2000
03	VIRGINIA	ROCKBRIDGE COUNTY *	51163C0225C	06-APR-2000
03	VIRGINIA	ROCKBRIDGE COUNTY *	51163C0250C	06-APR-2000
03	VIRGINIA	ROCKBRIDGE COUNTY *	51163C0262C	06-APR-2000
03	VIRGINIA	ROCKBRIDGE COUNTY *	51163C0264C	06-APR-2000
03	VIRGINIA	ROCKBRIDGE COUNTY *	51163C0266C	06-APR-2000
03	VIRGINIA	ROCKBRIDGE COUNTY *	51163C0270C	06-APR-2000
03	VIRGINIA	ROCKBRIDGE COUNTY *	51163C0275C	06-APR-2000
03	VIRGINIA	ROCKBRIDGE COUNTY *	51163C0280C	06-APR-2000
03	VIRGINIA	ROCKBRIDGE COUNTY *	51163C0285C	06-APR-2000
03	VIRGINIA	ROCKBRIDGE COUNTY *	51163C0290C	06-APR-2000
03	VIRGINIA	ROCKBRIDGE COUNTY *	51163C0295C	06-APR-2000
03	VIRGINIA	ROCKBRIDGE COUNTY *	51163C0305C	06-APR-2000
03	VIRGINIA	ROCKBRIDGE COUNTY *	51163C0325C	06-APR-2000
03	VIRGINIA	ROCKBRIDGE COUNTY *	51163C0350C	06-APR-2000
03	VIRGINIA	ROCKBRIDGE COUNTY *	51163C0375C	06-APR-2000
03	VIRGINIA	ROCKBRIDGE COUNTY *	51163C0380C	06-APR-2000
03	VIRGINIA	ROCKBRIDGE COUNTY *	51163C0385C	06-APR-2000
03	VIRGINIA	ROCKBRIDGE COUNTY *	51163C0389C	06-APR-2000
03	VIRGINIA	ROCKBRIDGE COUNTY *	51163C0390C	06-APR-2000
03	VIRGINIA	ROCKBRIDGE COUNTY *	51163C0393C	06-APR-2000
03	VIRGINIA	ROCKBRIDGE COUNTY *	51163C0395C	06-APR-2000
03	VIRGINIA	ROCKBRIDGE COUNTY *	51163C0401C	06-APR-2000
03	VIRGINIA	ROCKBRIDGE COUNTY *	51163C0405C	06-APR-2000
03	VIRGINIA	ROCKBRIDGE COUNTY *	51163C0430C	06-APR-2000
03	VIRGINIA	ROCKBRIDGE COUNTY *	51163C0435C	06-APR-2000
03	VIRGINIA	ROCKBRIDGE COUNTY *	51163C0445C	06-APR-2000
03	VIRGINIA	ROCKBRIDGE COUNTY *	51163C0452C	06-APR-2000
03	VIRGINIA	ROCKBRIDGE COUNTY *	51163C0455C	06-APR-2000
03	VIRGINIA	ROCKBRIDGE COUNTY *	51163C0460C	06-APR-2000
03	WEST VIRGINIA	GRANT COUNTY*	5400380000	04-MAY-2000
03	WEST VIRGINIA	GRANT COUNTY*	5400380129C	04-MAY-2000
03	WEST VIRGINIA	GRANT COUNTY*	5400380133C	04-MAY-2000

Region	State	Community	Panel	Panel date
03	WEST VIRGINIA	GRANT COUNTY*	5400380141C	04-MAY-2000
03	WEST VIRGINIA	LOGAN COUNTY	5455360000	18-MAY-2000
03	WEST VIRGINIA	LOGAN COUNTY	5455360092C**	18-MAY-2000
03	WEST VIRGINIA	LOGAN COUNTY	5455360096C	18-MAY-2000
03	WEST VIRGINIA	LOGAN COUNTY	5455360098C	18-MAY-2000
03	WEST VIRGINIA	LOGAN COUNTY	5455360131C**	18-MAY-2000
03	WEST VIRGINIA	LOGAN COUNTY	5455360133C	18-MAY-2000
03	WEST VIRGINIA	LOGAN COUNTY	5455360162C	18-MAY-2000
03	WEST VIRGINIA	MORGAN COUNTY	5401440000	18-MAY-2000
03	WEST VIRGINIA	MORGAN COUNTY	5401440025D	18-MAY-2000
03	WEST VIRGINIA	MORGAN COUNTY	5401440075D	18-MAY-2000
03	WEST VIRGINIA	PETERSBURG, TOWN OF	5400390001E	04-MAY-2000
04	FLORIDA	CENTURY, CITY OF	12033C0000	23-FEB-2000
04	FLORIDA	CENTURY, CITY OF	12033C0075F	23-FEB-2000
04	FLORIDA	CENTURY, CITY OF	12033C0100F	23-FEB-2000
04	FLORIDA	DE FUNIAK SPRINGS, CITY OF (WALTON COUNTY).	12131C0000	07-MAR-2000
04	FLORIDA	DE FUNIAK SPRINGS, CITY OF (WALTON COUNTY).	12131C0275F**	07-MAR-2000
04	FLORIDA	DE FUNIAK SPRINGS, CITY OF (WALTON COUNTY).	12131C0300F**	07-MAR-2000
04	FLORIDA	ESCAMBIA COUNTY*	12033C0000	23-FEB-2000
04	FLORIDA	ESCAMBIA COUNTY*	12033C0005F	23-FEB-2000
04	FLORIDA	ESCAMBIA COUNTY*	12033C0025F	23-FEB-2000
04	FLORIDA	ESCAMBIA COUNTY*	12033C0050F	23-FEB-2000
04	FLORIDA	ESCAMBIA COUNTY*	12033C0075F	23-FEB-2000
04	FLORIDA	ESCAMBIA COUNTY*	12033C0100F	23-FEB-2000
04	FLORIDA	ESCAMBIA COUNTY*	12033C0115F	23-FEB-2000
04	FLORIDA	ESCAMBIA COUNTY*	12033C0120F	23-FEB-2000
04	FLORIDA	ESCAMBIA COUNTY*	12033C0125F	23-FEB-2000
04	FLORIDA	ESCAMBIA COUNTY*	12033C0145F	23-FEB-2000
04	FLORIDA	ESCAMBIA COUNTY*	12033C0150F	23-FEB-2000
04	FLORIDA	ESCAMBIA COUNTY*	12033C0155F	23-FEB-2000
04	FLORIDA	ESCAMBIA COUNTY*	12033C0160F	23-FEB-2000
04	FLORIDA	ESCAMBIA COUNTY*	12033C0165F	23-FEB-2000
04	FLORIDA	ESCAMBIA COUNTY*	12033C0170F	23-FEB-2000
04	FLORIDA	ESCAMBIA COUNTY*	12033C0185F	23-FEB-2000
04	FLORIDA	ESCAMBIA COUNTY*	12033C0210F	23-FEB-2000
04	FLORIDA	ESCAMBIA COUNTY*	12033C0230F	23-FEB-2000
04	FLORIDA	ESCAMBIA COUNTY*	12033C0235F	23-FEB-2000
04	FLORIDA	ESCAMBIA COUNTY*	12033C0240F	23-FEB-2000
04	FLORIDA	ESCAMBIA COUNTY*	12033C0245F	23-FEB-2000
04	FLORIDA	ESCAMBIA COUNTY*	12033C0260F	23-FEB-2000
04	FLORIDA	ESCAMBIA COUNTY*	12033C0265F	23-FEB-2000
04	FLORIDA	ESCAMBIA COUNTY*	12033C0270F	23-FEB-2000
04	FLORIDA	ESCAMBIA COUNTY*	12033C0280F	23-FEB-2000
04	FLORIDA	ESCAMBIA COUNTY*	12033C0285F	23-FEB-2000
04	FLORIDA	ESCAMBIA COUNTY*	12033C0290F	23-FEB-2000
04	FLORIDA	ESCAMBIA COUNTY*	12033C0295F	23-FEB-2000
04	FLORIDA	ESCAMBIA COUNTY*	12033C0305F	23-FEB-2000
04	FLORIDA	ESCAMBIA COUNTY*	12033C0315F	23-FEB-2000
04	FLORIDA	ESCAMBIA COUNTY*	12033C0320F	23-FEB-2000
04	FLORIDA	ESCAMBIA COUNTY*	12033C0335F	23-FEB-2000
04	FLORIDA	ESCAMBIA COUNTY*	12033C0345F	23-FEB-2000
04	FLORIDA	ESCAMBIA COUNTY*	12033C0355F	23-FEB-2000
04	FLORIDA	ESCAMBIA COUNTY*	12033C0360F	23-FEB-2000
04	FLORIDA	ESCAMBIA COUNTY*	12033C0364F	23-FEB-2000
04	FLORIDA	ESCAMBIA COUNTY*	12033C0365F	23-FEB-2000
04	FLORIDA	ESCAMBIA COUNTY*	12033C0368F	23-FEB-2000
04	FLORIDA	ESCAMBIA COUNTY*	12033C0369F	23-FEB-2000
04	FLORIDA	ESCAMBIA COUNTY*	12033C0370F	23-FEB-2000
04	FLORIDA	ESCAMBIA COUNTY*	12033C0380F	23-FEB-2000
04	FLORIDA	ESCAMBIA COUNTY*	12033C0385F	23-FEB-2000
04	FLORIDA	ESCAMBIA COUNTY*	12033C0386F	23-FEB-2000
04	FLORIDA	ESCAMBIA COUNTY*	12033C0388F	23-FEB-2000
04	FLORIDA	ESCAMBIA COUNTY*	12033C0389F	23-FEB-2000
04	FLORIDA	ESCAMBIA COUNTY*	12033C0443F	23-FEB-2000
04	FLORIDA	ESCAMBIA COUNTY*	12033C0444F	23-FEB-2000
04	FLORIDA	ESCAMBIA COUNTY*	12033C0463F	23-FEB-2000
04	FLORIDA	ESCAMBIA COUNTY*	12033C0492F	23-FEB-2000
04	FLORIDA	ESCAMBIA COUNTY*	12033C0494F	23-FEB-2000
04	FLORIDA	ESCAMBIA COUNTY*	12033C0505F	23-FEB-2000
04	FLORIDA	ESCAMBIA COUNTY*	12033C0508F	23-FEB-2000
04	FLORIDA	ESCAMBIA COUNTY*	12033C0509F	23-FEB-2000

Region	State	Community	Panel	Panel date
04	FLORIDA	ESCAMBIA COUNTY*	12033C0510F	23-FEB-2000
04	FLORIDA	ESCAMBIA COUNTY*	12033C0511F	23-FEB-2000
04	FLORIDA	ESCAMBIA COUNTY*	12033C0512F	23-FEB-2000
04	FLORIDA	ESCAMBIA COUNTY*	12033C0516F	23-FEB-2000
04	FLORIDA	ESCAMBIA COUNTY*	12033C0517F	23-FEB-2000
04	FLORIDA	ESCAMBIA COUNTY*	12033C0526F	23-FEB-2000
04	FLORIDA	ESCAMBIA COUNTY*	12033C0527F	23-FEB-2000
04	FLORIDA	ESCAMBIA COUNTY*	12033C0528F	23-FEB-2000
04	FLORIDA	ESCAMBIA COUNTY*	12033C0529F	23-FEB-2000
04	FLORIDA	ESCAMBIA COUNTY*	12033C0531F	23-FEB-2000
04	FLORIDA	ESCAMBIA COUNTY*	12033C0532F	23-FEB-2000
04	FLORIDA	ESCAMBIA COUNTY*	12033C0533F	23-FEB-2000
04	FLORIDA	ESCAMBIA COUNTY*	12033C0534F	23-FEB-2000
04	FLORIDA	ESCAMBIA COUNTY*	12033C0536F	23-FEB-2000
04	FLORIDA	ESCAMBIA COUNTY*	12033C0553F	23-FEB-2000
04	FLORIDA	ESCAMBIA COUNTY*	12033C0554F	23-FEB-2000
04	FLORIDA	ESCAMBIA COUNTY*	12033C0558F	23-FEB-2000
04	FLORIDA	ESCAMBIA COUNTY*	12033C0581F	23-FEB-2000
04	FLORIDA	ESCAMBIA COUNTY*	12033C0582F	23-FEB-2000
04	FLORIDA	ESCAMBIA COUNTY*	12033C0601F	23-FEB-2000
04	FLORIDA	ESCAMBIA COUNTY*	12033C0602F	23-FEB-2000
04	FLORIDA	ESCAMBIA COUNTY*	12033C0606F	23-FEB-2000
04	FLORIDA	ESCAMBIA COUNTY*	12033C0607F	23-FEB-2000
04	FLORIDA	FREEPORT, CITY OF	12131C0000	07-MAR-2000
04	FLORIDA	FREEPORT, CITY OF	12131C0420F	07-MAR-2000
04	FLORIDA	FREEPORT, CITY OF	12131C0440F	07-MAR-2000
04	FLORIDA	FREEPORT, CITY OF	12131C0556F	07-MAR-2000
04	FLORIDA	FREEPORT, CITY OF	12131C0557F	07-MAR-2000
04	FLORIDA	FREEPORT, CITY OF	12131C0580F	07-MAR-2000
04	FLORIDA	GREEN COVE SPRINGS, CITY OF	1200650000	06-APR-2000
04	FLORIDA	GREEN COVE SPRINGS, CITY OF	1200650001D	06-APR-2000
04	FLORIDA	GREEN COVE SPRINGS, CITY OF	1200650002D	06-APR-2000
04	FLORIDA	GREEN COVE SPRINGS, CITY OF	1200650003D	06-APR-2000
04	FLORIDA	GREEN COVE SPRINGS, CITY OF	1200650004D	06-APR-2000
04	FLORIDA	GULF BREEZE, CITY OF	1202750000	19-JAN-2000
04	FLORIDA	GULF BREEZE, CITY OF	1202750011F	19-JAN-2000
04	FLORIDA	GULF BREEZE, CITY OF	1202750012F	19-JAN-2000
04	FLORIDA	GULF BREEZE, CITY OF	1202750013F**	19-JAN-2000
04	FLORIDA	PAXTON, TOWN OF (WALTON COUNTY)	12131C0000	07-MAR-2000
04	FLORIDA	PAXTON, TOWN OF (WALTON COUNTY)	12131C0050F**	07-MAR-2000
04	FLORIDA	PENSACOLA BEACH-SANTA ROSA ISLAND AUTHORITY.	12033C0000	23-FEB-2000
04	FLORIDA	PENSACOLA BEACH-SANTA ROSA ISLAND AUTHORITY.	12033C0557F	23-FEB-2000
04	FLORIDA	PENSACOLA BEACH-SANTA ROSA ISLAND AUTHORITY.	12033C0558F	23-FEB-2000
04	FLORIDA	PENSACOLA BEACH-SANTA ROSA ISLAND AUTHORITY.	12033C0559F	23-FEB-2000
04	FLORIDA	PENSACOLA BEACH-SANTA ROSA ISLAND AUTHORITY.	12033C0577F	23-FEB-2000
04	FLORIDA	PENSACOLA BEACH-SANTA ROSA ISLAND AUTHORITY.	12033C0578F	23-FEB-2000
04	FLORIDA	PENSACOLA BEACH-SANTA ROSA ISLAND AUTHORITY.	12033C0579F	23-FEB-2000
04	FLORIDA	PENSACOLA BEACH-SANTA ROSA ISLAND AUTHORITY.	12033C0581F	23-FEB-2000
04	FLORIDA	PENSACOLA, CITY OF	12033C0000	23-FEB-2000
04	FLORIDA	PENSACOLA, CITY OF	12033C0315F**	23-FEB-2000
04	FLORIDA	PENSACOLA, CITY OF	12033C0320F**	23-FEB-2000
04	FLORIDA	PENSACOLA, CITY OF	12033C0369F	23-FEB-2000
04	FLORIDA	PENSACOLA, CITY OF	12033C0370F**	23-FEB-2000
04	FLORIDA	PENSACOLA, CITY OF	12033C0380F**	23-FEB-2000
04	FLORIDA	PENSACOLA, CITY OF	12033C0383F**	23-FEB-2000
04	FLORIDA	PENSACOLA, CITY OF	12033C0385F**	23-FEB-2000
04	FLORIDA	PENSACOLA, CITY OF	12033C0386F**	23-FEB-2000
04	FLORIDA	PENSACOLA, CITY OF	12033C0387F	23-FEB-2000
04	FLORIDA	PENSACOLA, CITY OF	12033C0388F	23-FEB-2000
04	FLORIDA	PENSACOLA, CITY OF	12033C0389F	23-FEB-2000
04	FLORIDA	PENSACOLA, CITY OF	12033C0391F**	23-FEB-2000
04	FLORIDA	SANTA ROSA COUNTY *	1202740000	19-JAN-2000
04	FLORIDA	SANTA ROSA COUNTY *	1202740329C	19-JAN-2000
04	FLORIDA	SANTA ROSA COUNTY *	1202740333D	19-JAN-2000
04	FLORIDA	SANTA ROSA COUNTY *	1202740334D	19-JAN-2000
04	FLORIDA	SANTA ROSA COUNTY *	1202740335D	19-JAN-2000

Region	State	Community	Panel	Panel date
04	FLORIDA	SANTA ROSA COUNTY *	1202740337C	19-JAN-2000
04	FLORIDA	SANTA ROSA COUNTY *	1202740341C	19-JAN-2000
04	FLORIDA	SANTA ROSA COUNTY *	1202740342C	19-JAN-2000
04	FLORIDA	SANTA ROSA COUNTY *	1202740353E	19-JAN-2000
04	FLORIDA	SANTA ROSA COUNTY *	1202740354E	19-JAN-2000
04	FLORIDA	SANTA ROSA COUNTY *	1202740355E	19-JAN-2000
04	FLORIDA	SANTA ROSA COUNTY *	1202740358D	19-JAN-2000
04	FLORIDA	SANTA ROSA COUNTY *	1202740359D	19-JAN-2000
04	FLORIDA	SANTA ROSA COUNTY *	1202740360D	19-JAN-2000
04	FLORIDA	SANTA ROSA COUNTY *	1202740361C	19-JAN-2000
04	FLORIDA	SANTA ROSA COUNTY *	1202740362C	19-JAN-2000
04	FLORIDA	SANTA ROSA COUNTY *	1202740366C	19-JAN-2000
04	FLORIDA	SANTA ROSA COUNTY *	1202740367C	19-JAN-2000
04	FLORIDA	WALTON COUNTY	12131C0000	07-MAR-2000
04	FLORIDA	WALTON COUNTY	12131C0025F**	07-MAR-2000
04	FLORIDA	WALTON COUNTY	12131C0050F**	07-MAR-2000
04	FLORIDA	WALTON COUNTY	12131C0075F**	07-MAR-2000
04	FLORIDA	WALTON COUNTY	12131C0100F**	07-MAR-2000
04	FLORIDA	WALTON COUNTY	12131C0125F**	07-MAR-2000
04	FLORIDA	WALTON COUNTY	12131C0150F**	07-MAR-2000
04	FLORIDA	WALTON COUNTY	12131C0175F**	07-MAR-2000
04	FLORIDA	WALTON COUNTY	12131C0200F**	07-MAR-2000
04	FLORIDA	WALTON COUNTY	12131C0225F**	07-MAR-2000
04	FLORIDA	WALTON COUNTY	12131C0250F**	07-MAR-2000
04	FLORIDA	WALTON COUNTY	12131C0275F**	07-MAR-2000
04	FLORIDA	WALTON COUNTY	12131C0300F**	07-MAR-2000
04	FLORIDA	WALTON COUNTY	12131C0305F**	07-MAR-2000
04	FLORIDA	WALTON COUNTY	12131C0310F**	07-MAR-2000
04	FLORIDA	WALTON COUNTY	12131C0315F**	07-MAR-2000
04	FLORIDA	WALTON COUNTY	12131C0320F**	07-MAR-2000
04	FLORIDA	WALTON COUNTY	12131C0330F**	07-MAR-2000
04	FLORIDA	WALTON COUNTY	12131C0340F	07-MAR-2000
04	FLORIDA	WALTON COUNTY	12131C0360F	07-MAR-2000
04	FLORIDA	WALTON COUNTY	12131C0370F	07-MAR-2000
04	FLORIDA	WALTON COUNTY	12131C0390F	07-MAR-2000
04	FLORIDA	WALTON COUNTY	12131C0395F	07-MAR-2000
04	FLORIDA	WALTON COUNTY	12131C0400F	07-MAR-2000
04	FLORIDA	WALTON COUNTY	12131C0415F	07-MAR-2000
04	FLORIDA	WALTON COUNTY	12131C0420F	07-MAR-2000
04	FLORIDA	WALTON COUNTY	12131C0425F	07-MAR-2000
04	FLORIDA	WALTON COUNTY	12131C0440F	07-MAR-2000
04	FLORIDA	WALTON COUNTY	12131C0445F	07-MAR-2000
04	FLORIDA	WALTON COUNTY	12131C0450F	07-MAR-2000
04	FLORIDA	WALTON COUNTY	12131C0455F	07-MAR-2000
04	FLORIDA	WALTON COUNTY	12131C0465F	07-MAR-2000
04	FLORIDA	WALTON COUNTY	12131C0470F	07-MAR-2000
04	FLORIDA	WALTON COUNTY	12131C0490F	07-MAR-2000
04	FLORIDA	WALTON COUNTY	12131C0507F	07-MAR-2000
04	FLORIDA	WALTON COUNTY	12131C0509F	07-MAR-2000
04	FLORIDA	WALTON COUNTY	12131C0519F	07-MAR-2000
04	FLORIDA	WALTON COUNTY	12131C0526F	07-MAR-2000
04	FLORIDA	WALTON COUNTY	12131C0527F	07-MAR-2000
04	FLORIDA	WALTON COUNTY	12131C0528F	07-MAR-2000
04	FLORIDA	WALTON COUNTY	12131C0532F	07-MAR-2000
04	FLORIDA	WALTON COUNTY	12131C0532F	07-MAR-2000
04	FLORIDA	WALTON COUNTY	12131C0537F	07-MAR-2000
04	FLORIDA	WALTON COUNTY	12131C0538F	07-MAR-2000
04	FLORIDA	WALTON COUNTY	12131C0539F	07-MAR-2000
04	FLORIDA	WALTON COUNTY	12131C0541F	07-MAR-2000
04	FLORIDA	WALTON COUNTY	12131C0542F	07-MAR-2000
04	FLORIDA	WALTON COUNTY	12131C0543F	07-MAR-2000
04	FLORIDA	WALTON COUNTY	12131C0544F	07-MAR-2000
04	FLORIDA	WALTON COUNTY	12131C0551F	07-MAR-2000
04	FLORIDA	WALTON COUNTY	12131C0552F	07-MAR-2000
04	FLORIDA	WALTON COUNTY	12131C0554F	07-MAR-2000
04	FLORIDA	WALTON COUNTY	12131C0554F	07-MAR-2000
04	FLORIDA	WALTON COUNTY	12131C0556F	07-MAR-2000
04	FLORIDA	WALTON COUNTY	12131C0557F	07-MAR-2000
04	FLORIDA	WALTON COUNTY	12131C0558F	07-MAR-2000
04	FLORIDA	WALTON COUNTY	12131C0559F	07-MAR-2000
04	FLORIDA	WALTON COUNTY	12131C0561F	07-MAR-2000
04	FLORIDA	WALTON COUNTY	12131C0562F	07-MAR-2000
04	FLORIDA	WALTON COUNTY	12131C0563F	07-MAR-2000
04	FLORIDA	WALTON COUNTY	12131C0564F	07-MAR-2000

Region	State	Community	Panel	Panel date
04	FLORIDA	WALTON COUNTY	12131C0566F	07-MAR-2000
04	FLORIDA	WALTON COUNTY	12131C0568F	07-MAR-2000
04	FLORIDA	WALTON COUNTY	12131C0569F	07-MAR-2000
04	FLORIDA	WALTON COUNTY	12131C0580F	07-MAR-2000
04	FLORIDA	WALTON COUNTY	12131C0585F	07-MAR-2000
04	FLORIDA	WALTON COUNTY	12131C0590F	07-MAR-2000
04	FLORIDA	WALTON COUNTY	12131C0595F	07-MAR-2000
04	FLORIDA	WALTON COUNTY	12131C0595F	07-MAR-2000
04	FLORIDA	WALTON COUNTY	12131C0605F	07-MAR-2000
04	FLORIDA	WALTON COUNTY	12131C0615F	07-MAR-2000
04	FLORIDA	WALTON COUNTY	12131C0630F	07-MAR-2000
04	FLORIDA	WALTON COUNTY	12131C0676F	07-MAR-2000
04	FLORIDA	WALTON COUNTY	12131C0677F	07-MAR-2000
04	FLORIDA	WALTON COUNTY	12131C0681F	07-MAR-2000
04	FLORIDA	WALTON COUNTY	12131C0682F	07-MAR-2000
04	FLORIDA	WALTON COUNTY	12131C0701F	07-MAR-2000
04	FLORIDA	WALTON COUNTY	12131C0702F	07-MAR-2000
04	FLORIDA	WALTON COUNTY	12131C0703F	07-MAR-2000
04	FLORIDA	WALTON COUNTY	12131C0704F	07-MAR-2000
04	FLORIDA	WALTON COUNTY	12131C0706F**	07-MAR-2000
04	FLORIDA	WALTON COUNTY	12131C0707F**	07-MAR-2000
04	FLORIDA	WALTON COUNTY	12131C0708F	07-MAR-2000
04	FLORIDA	WALTON COUNTY	12131C0709F	07-MAR-2000
04	FLORIDA	WALTON COUNTY	12131C0726F**	07-MAR-2000
04	FLORIDA	WALTON COUNTY	12131C0728F	07-MAR-2000
04	FLORIDA	WALTON COUNTY	12131C0730F**	07-MAR-2000
04	FLORIDA	WALTON COUNTY	12131C0735F**	07-MAR-2000
04	FLORIDA	WALTON COUNTY	12131C0736F	07-MAR-2000
04	FLORIDA	WALTON COUNTY	12131C0737F	07-MAR-2000
04	FLORIDA	WALTON COUNTY	12131C0741F	07-MAR-2000
04	FLORIDA	WALTON COUNTY	12131C0742F	07-MAR-2000
04	FLORIDA	WALTON COUNTY	12131C0744F	07-MAR-2000
04	FLORIDA	WALTON COUNTY	12131C0755F	07-MAR-2000
04	FLORIDA	WALTON COUNTY	12131C0761F	07-MAR-2000
04	FLORIDA	WALTON COUNTY	12131C0763F	07-MAR-2000
04	GEORGIA	CLERMONT, TOWN OF (HALL COUNTY)	13139C0000	21-MAR-2000
04	GEORGIA	CLERMONT, TOWN OF (HALL COUNTY)	13139C0081E	21-MAR-2000
04	GEORGIA	CLERMONT, TOWN OF (HALL COUNTY)	13139C0085E	21-MAR-2000
04	GEORGIA	FLOWERY BRANCH, CITY OF	13139C0000	21-MAR-2000
04	GEORGIA	FLOWERY BRANCH, CITY OF	13139C0283E	21-MAR-2000
04	GEORGIA	FLOWERY BRANCH, CITY OF	13139C0291E	21-MAR-2000
04	GEORGIA	FLOWERY BRANCH, CITY OF	13139C0300E	21-MAR-2000
04	GEORGIA	GAINESVILLE, CITY OF	13139C0000	21-MAR-2000
04	GEORGIA	GAINESVILLE, CITY OF	13139C0169E	21-MAR-2000
04	GEORGIA	GAINESVILLE, CITY OF	13139C0170E	21-MAR-2000
04	GEORGIA	GAINESVILLE, CITY OF	13139C0175E	21-MAR-2000
04	GEORGIA	GAINESVILLE, CITY OF	13139C0179E	21-MAR-2000
04	GEORGIA	GAINESVILLE, CITY OF	13139C0180E	21-MAR-2000
04	GEORGIA	GAINESVILLE, CITY OF	13139C0183E	21-MAR-2000
04	GEORGIA	GAINESVILLE, CITY OF	13139C0185E	21-MAR-2000
04	GEORGIA	GAINESVILLE, CITY OF	13139C0186E	21-MAR-2000
04	GEORGIA	GAINESVILLE, CITY OF	13139C0187E	21-MAR-2000
04	GEORGIA	GAINESVILLE, CITY OF	13139C0188E	21-MAR-2000
04	GEORGIA	GAINESVILLE, CITY OF	13139C0189E	21-MAR-2000
04	GEORGIA	GAINESVILLE, CITY OF	13139C0195E	21-MAR-2000
04	GEORGIA	GAINESVILLE, CITY OF	13139C0301E	21-MAR-2000
04	GEORGIA	GAINESVILLE, CITY OF	13139C0302E	21-MAR-2000
04	GEORGIA	GAINESVILLE, CITY OF	13139C0310E	21-MAR-2000
04	GEORGIA	GILLSVILLE, CITY OF	13139C0000	21-MAR-2000
04	GEORGIA	GILLSVILLE, CITY OF	13139C0225E**	21-MAR-2000
04	GEORGIA	HALL COUNTY *	13139C0000	21-MAR-2000
04	GEORGIA	HALL COUNTY *	13139C0025E	21-MAR-2000
04	GEORGIA	HALL COUNTY *	13139C0040E	21-MAR-2000
04	GEORGIA	HALL COUNTY *	13139C0045E	21-MAR-2000
04	GEORGIA	HALL COUNTY *	13139C0059E	21-MAR-2000
04	GEORGIA	HALL COUNTY *	13139C0060E	21-MAR-2000
04	GEORGIA	HALL COUNTY *	13139C0067E	21-MAR-2000
04	GEORGIA	HALL COUNTY *	13139C0070E	21-MAR-2000
04	GEORGIA	HALL COUNTY *	13139C0075E	21-MAR-2000
04	GEORGIA	HALL COUNTY *	13139C0076E	21-MAR-2000
04	GEORGIA	HALL COUNTY *	13139C0077E	21-MAR-2000
04	GEORGIA	HALL COUNTY *	13139C0078E	21-MAR-2000
04	GEORGIA	HALL COUNTY *	13139C0079E	21-MAR-2000
04	GEORGIA	HALL COUNTY *	13139C0081E	21-MAR-2000

Region	State	Community	Panel	Panel date
04	GEORGIA	HALL COUNTY *	13139C0083E	21-MAR-2000
04	GEORGIA	HALL COUNTY *	13139C0085E	21-MAR-2000
04	GEORGIA	HALL COUNTY *	13139C0086E	21-MAR-2000
04	GEORGIA	HALL COUNTY *	13139C0087E	21-MAR-2000
04	GEORGIA	HALL COUNTY *	13139C0088E	21-MAR-2000
04	GEORGIA	HALL COUNTY *	13139C0089E	21-MAR-2000
04	GEORGIA	HALL COUNTY *	13139C0091E	21-MAR-2000
04	GEORGIA	HALL COUNTY *	13139C0093E	21-MAR-2000
04	GEORGIA	HALL COUNTY *	13139C0095E	21-MAR-2000
04	GEORGIA	HALL COUNTY *	13139C0110E	21-MAR-2000
04	GEORGIA	HALL COUNTY *	13139C0125E	21-MAR-2000
04	GEORGIA	HALL COUNTY *	13139C0169E	21-MAR-2000
04	GEORGIA	HALL COUNTY *	13139C0170E	21-MAR-2000
04	GEORGIA	HALL COUNTY *	13139C0175E	21-MAR-2000
04	GEORGIA	HALL COUNTY *	13139C0179E	21-MAR-2000
04	GEORGIA	HALL COUNTY *	13139C0180E	21-MAR-2000
04	GEORGIA	HALL COUNTY *	13139C0183E	21-MAR-2000
04	GEORGIA	HALL COUNTY *	13139C0185E	21-MAR-2000
04	GEORGIA	HALL COUNTY *	13139C0186E	21-MAR-2000
04	GEORGIA	HALL COUNTY *	13139C0187E	21-MAR-2000
04	GEORGIA	HALL COUNTY *	13139C0188E	21-MAR-2000
04	GEORGIA	HALL COUNTY *	13139C0189E	21-MAR-2000
04	GEORGIA	HALL COUNTY *	13139C0195E	21-MAR-2000
04	GEORGIA	HALL COUNTY *	13139C0225E	21-MAR-2000
04	GEORGIA	HALL COUNTY *	13139C0275E	21-MAR-2000
04	GEORGIA	HALL COUNTY *	13139C0281E	21-MAR-2000
04	GEORGIA	HALL COUNTY *	13139C0282E	21-MAR-2000
04	GEORGIA	HALL COUNTY *	13139C0283E	21-MAR-2000
04	GEORGIA	HALL COUNTY *	13139C0284E	21-MAR-2000
04	GEORGIA	HALL COUNTY *	13139C0291E	21-MAR-2000
04	GEORGIA	HALL COUNTY *	13139C0292E	21-MAR-2000
04	GEORGIA	HALL COUNTY *	13139C0294E	21-MAR-2000
04	GEORGIA	HALL COUNTY *	13139C0300E	21-MAR-2000
04	GEORGIA	HALL COUNTY *	13139C0301E	21-MAR-2000
04	GEORGIA	HALL COUNTY *	13139C0302E	21-MAR-2000
04	GEORGIA	HALL COUNTY *	13139C0303E	21-MAR-2000
04	GEORGIA	HALL COUNTY *	13139C0304E	21-MAR-2000
04	GEORGIA	HALL COUNTY *	13139C0308E	21-MAR-2000
04	GEORGIA	HALL COUNTY *	13139C0310E	21-MAR-2000
04	GEORGIA	HALL COUNTY *	13139C0311E	21-MAR-2000
04	GEORGIA	HALL COUNTY *	13139C0312E	21-MAR-2000
04	GEORGIA	HALL COUNTY *	13139C0313E	21-MAR-2000
04	GEORGIA	HALL COUNTY *	13139C0314E	21-MAR-2000
04	GEORGIA	HALL COUNTY *	13139C0316E	21-MAR-2000
04	GEORGIA	HALL COUNTY *	13139C0317E	21-MAR-2000
04	GEORGIA	HALL COUNTY *	13139C0318E	21-MAR-2000
04	GEORGIA	HALL COUNTY *	13139C0350E	21-MAR-2000
04	GEORGIA	HALL COUNTY *	13139C0356E	21-MAR-2000
04	GEORGIA	HALL COUNTY *	13139C0357E**	21-MAR-2000
04	GEORGIA	HALL COUNTY *	13139C0376E	21-MAR-2000
04	GEORGIA	HALL COUNTY *	13139C0377E	21-MAR-2000
04	GEORGIA	LULA, CITY OF	13139C0000	21-MAR-2000
04	GEORGIA	LULA, CITY OF	13139C0125E**	21-MAR-2000
04	GEORGIA	LULA, CITY OF	13139C0225E**	21-MAR-2000
04	GEORGIA	OAKWOOD, CITY OF (HALL COUNTY)	13139C0000	21-MAR-2000
04	GEORGIA	OAKWOOD, CITY OF (HALL COUNTY)	13139C0169E	21-MAR-2000
04	GEORGIA	OAKWOOD, CITY OF (HALL COUNTY)	13139C0188E**	21-MAR-2000
04	GEORGIA	OAKWOOD, CITY OF (HALL COUNTY)	13139C0282E	21-MAR-2000
04	GEORGIA	OAKWOOD, CITY OF (HALL COUNTY)	13139C0284E**	21-MAR-2000
04	GEORGIA	OAKWOOD, CITY OF (HALL COUNTY)	13139C0301E	21-MAR-2000
04	GEORGIA	OAKWOOD, CITY OF (HALL COUNTY)	13139C0303E	21-MAR-2000
04	KENTUCKY	INEZ, CITY OF	2103620001D	07-MAR-2000
04	KENTUCKY	MARTIN COUNTY*	2101660000	07-MAR-2000
04	KENTUCKY	MARTIN COUNTY*	2101660014D	07-MAR-2000
04	KENTUCKY	MARTIN COUNTY*	2101660025D	07-MAR-2000
04	KENTUCKY	MARTIN COUNTY*	2101660031D	07-MAR-2000
04	KENTUCKY	MARTIN COUNTY*	2101660032D	07-MAR-2000
04	MISSISSIPPI	BROOKHAVEN, CITY OF	2801070000	07-JAN-2000
04	MISSISSIPPI	BROOKHAVEN, CITY OF	2801070001B	07-JAN-2000
04	MISSISSIPPI	BROOKHAVEN, CITY OF	2801070003B	07-JAN-2000
04	MISSISSIPPI	LAUDERDALE COUNTY *	28075C0000	21-MAR-2000
04	MISSISSIPPI	LAUDERDALE COUNTY *	28075C0084D	21-MAR-2000
04	MISSISSIPPI	LAUDERDALE COUNTY *	28075C0085D	21-MAR-2000
04	MISSISSIPPI	LAUDERDALE COUNTY *	28075C0092E	21-MAR-2000

Region	State	Community	Panel	Panel date
04	MISSISSIPPI	LAUDERDALE COUNTY *	28075C0095E	21-MAR-2000
04	MISSISSIPPI	LAUDERDALE COUNTY *	28075C0101E	21-MAR-2000
04	MISSISSIPPI	LAUDERDALE COUNTY *	28075C0103E	21-MAR-2000
04	MISSISSIPPI	LAUDERDALE COUNTY *	28075C0105E	21-MAR-2000
04	MISSISSIPPI	LAUDERDALE COUNTY *	28075C0115E	21-MAR-2000
04	MISSISSIPPI	LAUDERDALE COUNTY *	28075C0160E	21-MAR-2000
04	MISSISSIPPI	LINCOLN COUNTY	2802730000	07-JAN-2000
04	MISSISSIPPI	LINCOLN COUNTY	2802730110C	07-JAN-2000
04	MISSISSIPPI	MERIDIAN, CITY OF	28075C0000	21-MAR-2000
04	MISSISSIPPI	MERIDIAN, CITY OF	28075C005E	21-MAR-2000
04	MISSISSIPPI	MERIDIAN, CITY OF	28075C0084D	21-MAR-2000
04	MISSISSIPPI	MERIDIAN, CITY OF	28075C0085D	21-MAR-2000
04	MISSISSIPPI	MERIDIAN, CITY OF	28075C0092E	21-MAR-2000
04	MISSISSIPPI	MERIDIAN, CITY OF	28075C0095E	21-MAR-2000
04	MISSISSIPPI	MERIDIAN, CITY OF	28075C0101E	21-MAR-2000
04	MISSISSIPPI	MERIDIAN, CITY OF	28075C0103E	21-MAR-2000
04	MISSISSIPPI	MERIDIAN, CITY OF	28075C0111E	21-MAR-2000
04	MISSISSIPPI	MERIDIAN, CITY OF	28075C0115E	21-MAR-2000
04	MISSISSIPPI	MERIDIAN, CITY OF	28075C0160E	21-MAR-2000
04	NORTH CAROLINA	BURGAW, TOWN OF PENDER COUNTY	3704830000	19-JAN-2000
04	NORTH CAROLINA	BURGAW, TOWN OF PENDER COUNTY	3704830001A	19-JAN-2000
04	NORTH CAROLINA	BURGAW, TOWN OF PENDER COUNTY	3704830002A	19-JAN-2000
04	NORTH CAROLINA	BURGAW, TOWN OF PENDER COUNTY	3704830003A	19-JAN-2000
04	NORTH CAROLINA	CORNELIUS, TOWN OF	3704980000	19-JAN-2000
04	NORTH CAROLINA	CORNELIUS, TOWN OF	3704980005A	19-JAN-2000
04	NORTH CAROLINA	CORNELIUS, TOWN OF	3704980010A	19-JAN-2000
04	NORTH CAROLINA	CORNELIUS, TOWN OF	3704980015A	19-JAN-2000
04	NORTH CAROLINA	CUMBERLAND COUNTY (UNINCORPORATED AREAS).	3700760000	04-MAY-2000
04	NORTH CAROLINA	CUMBERLAND COUNTY (UNINCORPORATED AREAS).	3700760030C**	04-MAY-2000
04	NORTH CAROLINA	CUMBERLAND COUNTY (UNINCORPORATED AREAS).	3700760035C**	04-MAY-2000
04	NORTH CAROLINA	CUMBERLAND COUNTY (UNINCORPORATED AREAS).	3700760070C**	04-MAY-2000
04	NORTH CAROLINA	CUMBERLAND COUNTY (UNINCORPORATED AREAS).	3700760075C**	04-MAY-2000
04	NORTH CAROLINA	DAVIDSON, TOWN OF IREDELL AND MECKLENBURG COUNTIES.	3705030005A	19-JAN-2000
04	NORTH CAROLINA	DURHAM COUNTY (UNINCORPORATED AREAS).	37063C0000	21-MAR-2000
04	NORTH CAROLINA	DURHAM COUNTY (UNINCORPORATED AREAS).	37063C0154H	21-MAR-2000
04	NORTH CAROLINA	DURHAM COUNTY (UNINCORPORATED AREAS).	37063C0159H	21-MAR-2000
04	NORTH CAROLINA	DURHAM COUNTY (UNINCORPORATED AREAS).	37063C0162H	21-MAR-2000
04	NORTH CAROLINA	DURHAM COUNTY (UNINCORPORATED AREAS).	37063C0166H	21-MAR-2000
04	NORTH CAROLINA	MECKLENBURG COUNTY *	3701580000	19-JAN-2000
04	NORTH CAROLINA	MECKLENBURG COUNTY *	3701580005D**	19-JAN-2000
04	NORTH CAROLINA	MECKLENBURG COUNTY *	3701580010D**	19-JAN-2000
04	NORTH CAROLINA	MECKLENBURG COUNTY *	3701580015D**	19-JAN-2000
04	NORTH CAROLINA	MECKLENBURG COUNTY *	3701580020D**	19-JAN-2000
04	NORTH CAROLINA	MECKLENBURG COUNTY *	3701580025C**	19-JAN-2000
04	NORTH CAROLINA	MECKLENBURG COUNTY *	3701580030D**	19-JAN-2000
04	NORTH CAROLINA	SPRING LAKE, TOWN OF (CUMBERLAND COUNTY).	3700760000	04-MAY-2000
04	NORTH CAROLINA	SPRING LAKE, TOWN OF (CUMBERLAND COUNTY).	3700760001A**	04-MAY-2000
04	NORTH CAROLINA	SPRING LAKE, TOWN OF (CUMBERLAND COUNTY).	3700760002A**	04-MAY-2000
04	SOUTH CAROLINA	BATESBURG-LEESVILLE, TOWN OF	45063C0000	09-FEB-2000
04	SOUTH CAROLINA	BATESBURG-LEESVILLE, TOWN OF	45063C0195G	09-FEB-2000
04	SOUTH CAROLINA	BATESBURG-LEESVILLE, TOWN OF	45063C0200G	09-FEB-2000
04	SOUTH CAROLINA	BATESBURG-LEESVILLE, TOWN OF	45063C0225G	09-FEB-2000
04	SOUTH CAROLINA	CAYCE, CITY OF	45063C0000	09-FEB-2000
04	SOUTH CAROLINA	CAYCE, CITY OF	45063C0277G**	09-FEB-2000
04	SOUTH CAROLINA	CAYCE, CITY OF	45063C0278G**	09-FEB-2000
04	SOUTH CAROLINA	CAYCE, CITY OF	45063C0279G**	09-FEB-2000
04	SOUTH CAROLINA	CAYCE, CITY OF	45063C0287G**	09-FEB-2000
04	SOUTH CAROLINA	CHAPIN, TOWN OF LEXINGTON COUNTY	45063C0000	09-FEB-2000
04	SOUTH CAROLINA	CHAPIN, TOWN OF LEXINGTON COUNTY	45063C0040G**	09-FEB-2000
04	SOUTH CAROLINA	COLUMBIA, CITY OF	45063C0000	09-FEB-2000

Region	State	Community	Panel	Panel date
04	SOUTH CAROLINA	COLUMBIA, CITY OF	45063C0133G**	09-FEB-2000
04	SOUTH CAROLINA	COLUMBIA, CITY OF	45063C0134G**	09-FEB-2000
04	SOUTH CAROLINA	GASTON,TOWN OF	45063C0000	09-FEB-2000
04	SOUTH CAROLINA	GASTON,TOWN OF	45063C0404G	09-FEB-2000
04	SOUTH CAROLINA	GASTON,TOWN OF	45063C0411G	09-FEB-2000
04	SOUTH CAROLINA	GASTON,TOWN OF	45063C0412G	09-FEB-2000
04	SOUTH CAROLINA	GILBERT, TOWN OF	45063C0000	09-FEB-2000
04	SOUTH CAROLINA	GILBERT, TOWN OF	45063C0217G**	09-FEB-2000
04	SOUTH CAROLINA	IRMO, TOWN OF	45063C0000	09-FEB-2000
04	SOUTH CAROLINA	IRMO, TOWN OF	45063C0127G**	09-FEB-2000
04	SOUTH CAROLINA	IRMO, TOWN OF	45063C0129G**	09-FEB-2000
04	SOUTH CAROLINA	IRMO, TOWN OF	45063C0133G**	09-FEB-2000
04	SOUTH CAROLINA	LEXINGTON COUNTY (UNINCORPORATED AREAS).	45063C0000	09-FEB-2000
04	SOUTH CAROLINA	LEXINGTON COUNTY (UNINCORPORATED AREAS).	45063C0020G**	09-FEB-2000
04	SOUTH CAROLINA	LEXINGTON COUNTY (UNINCORPORATED AREAS).	45063C0040G**	09-FEB-2000
04	SOUTH CAROLINA	LEXINGTON COUNTY (UNINCORPORATED AREAS).	45063C0050G	09-FEB-2000
04	SOUTH CAROLINA	LEXINGTON COUNTY (UNINCORPORATED AREAS).	45063C0080G**	09-FEB-2000
04	SOUTH CAROLINA	LEXINGTON COUNTY (UNINCORPORATED AREAS).	45063C0085G**	09-FEB-2000
04	SOUTH CAROLINA	LEXINGTON COUNTY (UNINCORPORATED AREAS).	45063C0090G**	09-FEB-2000
04	SOUTH CAROLINA	LEXINGTON COUNTY (UNINCORPORATED AREAS).	45063C0095G**	09-FEB-2000
04	SOUTH CAROLINA	LEXINGTON COUNTY (UNINCORPORATED AREAS).	45063C0110G**	09-FEB-2000
04	SOUTH CAROLINA	LEXINGTON COUNTY (UNINCORPORATED AREAS).	45063C0111G**	09-FEB-2000
04	SOUTH CAROLINA	LEXINGTON COUNTY (UNINCORPORATED AREAS).	45063C0112G**	09-FEB-2000
04	SOUTH CAROLINA	LEXINGTON COUNTY (UNINCORPORATED AREAS).	45063C0113G**	09-FEB-2000
04	SOUTH CAROLINA	LEXINGTON COUNTY (UNINCORPORATED AREAS).	45063C0114G**	09-FEB-2000
04	SOUTH CAROLINA	LEXINGTON COUNTY (UNINCORPORATED AREAS).	45063C0116G**	09-FEB-2000
04	SOUTH CAROLINA	LEXINGTON COUNTY (UNINCORPORATED AREAS).	45063C0117G**	09-FEB-2000
04	SOUTH CAROLINA	LEXINGTON COUNTY (UNINCORPORATED AREAS).	45063C0118G**	09-FEB-2000
04	SOUTH CAROLINA	LEXINGTON COUNTY (UNINCORPORATED AREAS).	45063C0119G**	09-FEB-2000
04	SOUTH CAROLINA	LEXINGTON COUNTY (UNINCORPORATED AREAS).	45063C0126G**	09-FEB-2000
04	SOUTH CAROLINA	LEXINGTON COUNTY (UNINCORPORATED AREAS).	45063C0127G**	09-FEB-2000
04	SOUTH CAROLINA	LEXINGTON COUNTY (UNINCORPORATED AREAS).	45063C0128G**	09-FEB-2000
04	SOUTH CAROLINA	LEXINGTON COUNTY (UNINCORPORATED AREAS).	45063C0129G**	09-FEB-2000
04	SOUTH CAROLINA	LEXINGTON COUNTY (UNINCORPORATED AREAS).	45063C0133G**	09-FEB-2000
04	SOUTH CAROLINA	LEXINGTON COUNTY (UNINCORPORATED AREAS).	45063C0134G**	09-FEB-2000
04	SOUTH CAROLINA	LEXINGTON COUNTY (UNINCORPORATED AREAS).	45063C0136G**	09-FEB-2000
04	SOUTH CAROLINA	LEXINGTON COUNTY (UNINCORPORATED AREAS).	45063C0137G**	09-FEB-2000
04	SOUTH CAROLINA	LEXINGTON COUNTY (UNINCORPORATED AREAS).	45063C0138G**	09-FEB-2000
04	SOUTH CAROLINA	LEXINGTON COUNTY (UNINCORPORATED AREAS).	45063C0139G**	09-FEB-2000
04	SOUTH CAROLINA	LEXINGTON COUNTY (UNINCORPORATED AREAS).	45063C0141G**	09-FEB-2000
04	SOUTH CAROLINA	LEXINGTON COUNTY (UNINCORPORATED AREAS).	45063C0142G**	09-FEB-2000
04	SOUTH CAROLINA	LEXINGTON COUNTY (UNINCORPORATED AREAS).	45063C0143G	09-FEB-2000
04	SOUTH CAROLINA	LEXINGTON COUNTY (UNINCORPORATED AREAS).	45063C0144G**	09-FEB-2000

Region	State	Community	Panel	Panel date
04	SOUTH CAROLINA	LEXINGTON COUNTY (UNINCORPORATED AREAS).	45063C0161G**	09-FEB-2000
04	SOUTH CAROLINA	LEXINGTON COUNTY (UNINCORPORATED AREAS).	45063C0163G**	09-FEB-2000
04	SOUTH CAROLINA	LEXINGTON COUNTY (UNINCORPORATED AREAS).	45063C0195G	09-FEB-2000
04	SOUTH CAROLINA	LEXINGTON COUNTY (UNINCORPORATED AREAS).	45063C0200G	09-FEB-2000
04	SOUTH CAROLINA	LEXINGTON COUNTY (UNINCORPORATED AREAS).	45063C0216G	09-FEB-2000
04	SOUTH CAROLINA	LEXINGTON COUNTY (UNINCORPORATED AREAS).	45063C0217G**	09-FEB-2000
04	SOUTH CAROLINA	LEXINGTON COUNTY (UNINCORPORATED AREAS).	45063C0218G	09-FEB-2000
04	SOUTH CAROLINA	LEXINGTON COUNTY (UNINCORPORATED AREAS).	45063C0219G	09-FEB-2000
04	SOUTH CAROLINA	LEXINGTON COUNTY (UNINCORPORATED AREAS).	45063C0225G	09-FEB-2000
04	SOUTH CAROLINA	LEXINGTON COUNTY (UNINCORPORATED AREAS).	45063C0226G	09-FEB-2000
04	SOUTH CAROLINA	LEXINGTON COUNTY (UNINCORPORATED AREAS).	45063C0227G	09-FEB-2000
04	SOUTH CAROLINA	LEXINGTON COUNTY (UNINCORPORATED AREAS).	45063C0228G**	09-FEB-2000
04	SOUTH CAROLINA	LEXINGTON COUNTY (UNINCORPORATED AREAS).	45063C0229G**	09-FEB-2000
04	SOUTH CAROLINA	LEXINGTON COUNTY (UNINCORPORATED AREAS).	45063C0231G**	09-FEB-2000
04	SOUTH CAROLINA	LEXINGTON COUNTY (UNINCORPORATED AREAS).	45063C0232G**	09-FEB-2000
04	SOUTH CAROLINA	LEXINGTON COUNTY (UNINCORPORATED AREAS).	45063C0233G**	09-FEB-2000
04	SOUTH CAROLINA	LEXINGTON COUNTY (UNINCORPORATED AREAS).	45063C0234G**	09-FEB-2000
04	SOUTH CAROLINA	LEXINGTON COUNTY (UNINCORPORATED AREAS).	45063C0236G**	09-FEB-2000
04	SOUTH CAROLINA	LEXINGTON COUNTY (UNINCORPORATED AREAS).	45063C0237G**	09-FEB-2000
04	SOUTH CAROLINA	LEXINGTON COUNTY (UNINCORPORATED AREAS).	45063C0238G	09-FEB-2000
04	SOUTH CAROLINA	LEXINGTON COUNTY (UNINCORPORATED AREAS).	45063C0239G	09-FEB-2000
04	SOUTH CAROLINA	LEXINGTON COUNTY (UNINCORPORATED AREAS).	45063C0241G**	09-FEB-2000
04	SOUTH CAROLINA	LEXINGTON COUNTY (UNINCORPORATED AREAS).	45063C0242G**	09-FEB-2000
04	SOUTH CAROLINA	LEXINGTON COUNTY (UNINCORPORATED AREAS).	45063C0243G	09-FEB-2000
04	SOUTH CAROLINA	LEXINGTON COUNTY (UNINCORPORATED AREAS).	45063C0244G**	09-FEB-2000
04	SOUTH CAROLINA	LEXINGTON COUNTY (UNINCORPORATED AREAS).	45063C0251G**	09-FEB-2000
04	SOUTH CAROLINA	LEXINGTON COUNTY (UNINCORPORATED AREAS).	45063C0252G	09-FEB-2000
04	SOUTH CAROLINA	LEXINGTON COUNTY (UNINCORPORATED AREAS).	45063C0253G**	09-FEB-2000
04	SOUTH CAROLINA	LEXINGTON COUNTY (UNINCORPORATED AREAS).	45063C0254G**	09-FEB-2000
04	SOUTH CAROLINA	LEXINGTON COUNTY (UNINCORPORATED AREAS).	45063C0256G	09-FEB-2000
04	SOUTH CAROLINA	LEXINGTON COUNTY (UNINCORPORATED AREAS).	45063C0257G**	09-FEB-2000
04	SOUTH CAROLINA	LEXINGTON COUNTY (UNINCORPORATED AREAS).	45063C0258G**	09-FEB-2000
04	SOUTH CAROLINA	LEXINGTON COUNTY (UNINCORPORATED AREAS).	45063C0259G**	09-FEB-2000
04	SOUTH CAROLINA	LEXINGTON COUNTY (UNINCORPORATED AREAS).	45063C0261G**	09-FEB-2000
04	SOUTH CAROLINA	LEXINGTON COUNTY (UNINCORPORATED AREAS).	45063C0262G**	09-FEB-2000
04	SOUTH CAROLINA	LEXINGTON COUNTY (UNINCORPORATED AREAS).	45063C0263G**	09-FEB-2000
04	SOUTH CAROLINA	LEXINGTON COUNTY (UNINCORPORATED AREAS).	45063C0264G**	09-FEB-2000

Region	State	Community	Panel	Panel date
04	SOUTH CAROLINA	LEXINGTON COUNTY (UNINCORPORATED AREAS).	45063C0266G**	09-FEB-2000
04	SOUTH CAROLINA	LEXINGTON COUNTY (UNINCORPORATED AREAS).	45063C0267G**	09-FEB-2000
04	SOUTH CAROLINA	LEXINGTON COUNTY (UNINCORPORATED AREAS).	45063C0268G**	09-FEB-2000
04	SOUTH CAROLINA	LEXINGTON COUNTY (UNINCORPORATED AREAS).	45063C0269G**	09-FEB-2000
04	SOUTH CAROLINA	LEXINGTON COUNTY (UNINCORPORATED AREAS).	45063C0276G**	09-FEB-2000
04	SOUTH CAROLINA	LEXINGTON COUNTY (UNINCORPORATED AREAS).	45063C0277G**	09-FEB-2000
04	SOUTH CAROLINA	LEXINGTON COUNTY (UNINCORPORATED AREAS).	45063C0278G**	09-FEB-2000
04	SOUTH CAROLINA	LEXINGTON COUNTY (UNINCORPORATED AREAS).	45063C0279G**	09-FEB-2000
04	SOUTH CAROLINA	LEXINGTON COUNTY (UNINCORPORATED AREAS).	45063C0286G**	09-FEB-2000
04	SOUTH CAROLINA	LEXINGTON COUNTY (UNINCORPORATED AREAS).	45063C0287G**	09-FEB-2000
04	SOUTH CAROLINA	LEXINGTON COUNTY (UNINCORPORATED AREAS).	45063C0288G**	09-FEB-2000
04	SOUTH CAROLINA	LEXINGTON COUNTY (UNINCORPORATED AREAS).	45063C0289G	09-FEB-2000
04	SOUTH CAROLINA	LEXINGTON COUNTY (UNINCORPORATED AREAS).	45063C0325G	09-FEB-2000
04	SOUTH CAROLINA	LEXINGTON COUNTY (UNINCORPORATED AREAS).	45063C0350G	09-FEB-2000
04	SOUTH CAROLINA	LEXINGTON COUNTY (UNINCORPORATED AREAS).	45063C0355G	09-FEB-2000
04	SOUTH CAROLINA	LEXINGTON COUNTY (UNINCORPORATED AREAS).	45063C0356G	09-FEB-2000
04	SOUTH CAROLINA	LEXINGTON COUNTY (UNINCORPORATED AREAS).	45063C0357G**	09-FEB-2000
04	SOUTH CAROLINA	LEXINGTON COUNTY (UNINCORPORATED AREAS).	45063C0365G	09-FEB-2000
04	SOUTH CAROLINA	LEXINGTON COUNTY (UNINCORPORATED AREAS).	45063C0370G	09-FEB-2000
04	SOUTH CAROLINA	LEXINGTON COUNTY (UNINCORPORATED AREAS).	45063C0376G**	09-FEB-2000
04	SOUTH CAROLINA	LEXINGTON COUNTY (UNINCORPORATED AREAS).	45063C0378G	09-FEB-2000
04	SOUTH CAROLINA	LEXINGTON COUNTY (UNINCORPORATED AREAS).	45063C0379G	09-FEB-2000
04	SOUTH CAROLINA	LEXINGTON COUNTY (UNINCORPORATED AREAS).	45063C0381G**	09-FEB-2000
04	SOUTH CAROLINA	LEXINGTON COUNTY (UNINCORPORATED AREAS).	45063C0382G**	09-FEB-2000
04	SOUTH CAROLINA	LEXINGTON COUNTY (UNINCORPORATED AREAS).	45063C0383G**	09-FEB-2000
04	SOUTH CAROLINA	LEXINGTON COUNTY (UNINCORPORATED AREAS).	45063C0384G**	09-FEB-2000
04	SOUTH CAROLINA	LEXINGTON COUNTY (UNINCORPORATED AREAS).	45063C0390G	09-FEB-2000
04	SOUTH CAROLINA	LEXINGTON COUNTY (UNINCORPORATED AREAS).	45063C0395G	09-FEB-2000
04	SOUTH CAROLINA	LEXINGTON COUNTY (UNINCORPORATED AREAS).	45063C0401G**	09-FEB-2000
04	SOUTH CAROLINA	LEXINGTON COUNTY (UNINCORPORATED AREAS).	45063C0402G	09-FEB-2000
04	SOUTH CAROLINA	LEXINGTON COUNTY (UNINCORPORATED AREAS).	45063C0404G	09-FEB-2000
04	SOUTH CAROLINA	LEXINGTON COUNTY (UNINCORPORATED AREAS).	45063C0406G	09-FEB-2000
04	SOUTH CAROLINA	LEXINGTON COUNTY (UNINCORPORATED AREAS).	45063C0408G	09-FEB-2000
04	SOUTH CAROLINA	LEXINGTON COUNTY (UNINCORPORATED AREAS).	45063C0411G	09-FEB-2000
04	SOUTH CAROLINA	LEXINGTON COUNTY (UNINCORPORATED AREAS).	45063C0412G	09-FEB-2000
04	SOUTH CAROLINA	LEXINGTON COUNTY (UNINCORPORATED AREAS).	45063C0415G	09-FEB-2000
04	SOUTH CAROLINA	LEXINGTON COUNTY (UNINCORPORATED AREAS).	45063C0416G	09-FEB-2000

Region	State	Community	Panel	Panel date
04	SOUTH CAROLINA	LEXINGTON COUNTY (UNINCORPORATED AREAS).	45063C0450G	09-FEB-2000
04	SOUTH CAROLINA	LEXINGTON COUNTY (UNINCORPORATED AREAS).	45063C0475G	09-FEB-2000
04	SOUTH CAROLINA	LEXINGTON COUNTY (UNINCORPORATED AREAS).	45063C0500G	09-FEB-2000
04	SOUTH CAROLINA	LEXINGTON COUNTY (UNINCORPORATED AREAS).	45063C0525G	09-FEB-2000
04	SOUTH CAROLINA	LEXINGTON COUNTY (UNINCORPORATED AREAS).	45063C0530G	09-FEB-2000
04	SOUTH CAROLINA	LEXINGTON COUNTY (UNINCORPORATED AREAS).	45063C0550G	09-FEB-2000
04	SOUTH CAROLINA	LEXINGTON COUNTY (UNINCORPORATED AREAS).	45063C0575G	09-FEB-2000
04	SOUTH CAROLINA	PELION, TOWN OF	45063C0000	09-FEB-2000
04	SOUTH CAROLINA	PELION, TOWN OF	45063C0370G	09-FEB-2000
04	SOUTH CAROLINA	PELION, TOWN OF	45063C0390G	09-FEB-2000
04	SOUTH CAROLINA	PELION, TOWN OF	45063C0525G	09-FEB-2000
04	SOUTH CAROLINA	PINE RIDGE, TOWN OF	45063C0000	09-FEB-2000
04	SOUTH CAROLINA	PINE RIDGE, TOWN OF	45063C0286G**	09-FEB-2000
04	SOUTH CAROLINA	PINE RIDGE, TOWN OF	45063C0287G**	09-FEB-2000
04	SOUTH CAROLINA	PINE RIDGE, TOWN OF	45063C0288G**	09-FEB-2000
04	SOUTH CAROLINA	PINE RIDGE, TOWN OF	45063C0289G	09-FEB-2000
04	SOUTH CAROLINA	SOUTH CONGAREE, TOWN OF	45063C0000	09-FEB-2000
04	SOUTH CAROLINA	SOUTH CONGAREE, TOWN OF	45063C0266G**	09-FEB-2000
04	SOUTH CAROLINA	SOUTH CONGAREE, TOWN OF	45063C0267G**	09-FEB-2000
04	SOUTH CAROLINA	SOUTH CONGAREE, TOWN OF	45063C0268G**	09-FEB-2000
04	SOUTH CAROLINA	SOUTH CONGAREE, TOWN OF	45063C0269G**	09-FEB-2000
04	SOUTH CAROLINA	SOUTH CONGAREE, TOWN OF	45063C0286G**	09-FEB-2000
04	SOUTH CAROLINA	SOUTH CONGAREE, TOWN OF	45063C0288G**	09-FEB-2000
04	SOUTH CAROLINA	SPRINGDALE, TOWN OF	45063C0000	09-FEB-2000
04	SOUTH CAROLINA	SPRINGDALE, TOWN OF	45063C0257G**	09-FEB-2000
04	SOUTH CAROLINA	SPRINGDALE, TOWN OF	45063C0259G**	09-FEB-2000
04	SOUTH CAROLINA	SPRINGDALE, TOWN OF	45063C0276G**	09-FEB-2000
04	SOUTH CAROLINA	SPRINGDALE, TOWN OF	45063C0277G**	09-FEB-2000
04	SOUTH CAROLINA	SPRINGDALE, TOWN OF	45063C0278G**	09-FEB-2000
04	SOUTH CAROLINA	SPRINGDALE, TOWN OF	45063C0279G**	09-FEB-2000
04	SOUTH CAROLINA	SUMMIT, TOWN OF	45063C0000	09-FEB-2000
04	SOUTH CAROLINA	SUMMIT, TOWN OF	45063CO216G	09-FEB-2000
04	SOUTH CAROLINA	SWANSEA, TOWN OF	45063C0000	09-FEB-2000
04	SOUTH CAROLINA	SWANSEA, TOWN OF	45063C0530G	09-FEB-2000
04	SOUTH CAROLINA	WEST COLUMBIA, CITY OF	45063C0000	09-FEB-2000
04	SOUTH CAROLINA	WEST COLUMBIA, CITY OF	45063C0163G**	09-FEB-2000
04	SOUTH CAROLINA	WEST COLUMBIA, CITY OF	45063C0276G**	09-FEB-2000
04	SOUTH CAROLINA	WEST COLUMBIA, CITY OF	45063C0277G**	09-FEB-2000
04	SOUTH CAROLINA	WEST COLUMBIA, CITY OF	45063C0278G**	09-FEB-2000
04	SOUTH CAROLINA	WEST COLUMBIA, CITY OF	45063C0279G**	09-FEB-2000
04	TENNESSEE	DECATUR COUNTY*	4700410000	07-JAN-2000
04	TENNESSEE	DECATUR COUNTY*	4700410001C	07-JAN-2000
04	TENNESSEE	DECATUR COUNTY*	4700410002D	07-JAN-2000
04	TENNESSEE	DECATUR COUNTY*	4700410003D	07-JAN-2000
04	TENNESSEE	DECATUR COUNTY*	4700410004C	07-JAN-2000
04	TENNESSEE	DECATUR COUNTY*	4700410005C	07-JAN-2000
04	TENNESSEE	DECATUR COUNTY*	4700410006C	07-JAN-2000
05	MICHIGAN	ASH, TOWNSHIP OF	26115C0000	20-APR-2000
05	MICHIGAN	ASH, TOWNSHIP OF	26115C0084D	20-APR-2000
05	MICHIGAN	ASH, TOWNSHIP OF	26115C0085D	20-APR-2000
05	MICHIGAN	ASH, TOWNSHIP OF	26115C0094D	20-APR-2000
05	MICHIGAN	ASH, TOWNSHIP OF	26115C0095D	20-APR-2000
05	MICHIGAN	ASH, TOWNSHIP OF	26115C0103D	20-APR-2000
05	MICHIGAN	ASH, TOWNSHIP OF	26115C0108D	20-APR-2000
05	MICHIGAN	ASH, TOWNSHIP OF	26115C0111D	20-APR-2000
05	MICHIGAN	ASH, TOWNSHIP OF	26115C0112D	20-APR-2000
05	MICHIGAN	ASH, TOWNSHIP OF	26115C0113D	20-APR-2000
05	MICHIGAN	ASH, TOWNSHIP OF	26115C0114D	20-APR-2000
05	MICHIGAN	ASH, TOWNSHIP OF	26115C0116D	20-APR-2000
05	MICHIGAN	ASH, TOWNSHIP OF	26115C0118D	20-APR-2000
05	MICHIGAN	BEDFORD, TOWNSHIP OF (MONROE COUNTY).	26115C0000	20-APR-2000
05	MICHIGAN	BEDFORD, TOWNSHIP OF (MONROE COUNTY).	26115C0344D	20-APR-2000
05	MICHIGAN	BEDFORD, TOWNSHIP OF (MONROE COUNTY).	26115C0345D	20-APR-2000

Region	State	Community	Panel	Panel date
05	MICHIGAN	BEDFORD, TOWNSHIP OF (MONROE COUNTY).	26115C0350D	20-APR-2000
05	MICHIGAN	BEDFORD, TOWNSHIP OF (MONROE COUNTY).	26115C0355D	20-APR-2000
05	MICHIGAN	BEDFORD, TOWNSHIP OF (MONROE COUNTY).	26115C0360D	20-APR-2000
05	MICHIGAN	BEDFORD, TOWNSHIP OF (MONROE COUNTY).	26115C0363D	20-APR-2000
05	MICHIGAN	BEDFORD, TOWNSHIP OF (MONROE COUNTY).	26115C0364D	20-APR-2000
05	MICHIGAN	BEDFORD, TOWNSHIP OF (MONROE COUNTY).	26115C0365D	20-APR-2000
05	MICHIGAN	BEDFORD, TOWNSHIP OF (MONROE COUNTY).	26115C0366D	20-APR-2000
05	MICHIGAN	BEDFORD, TOWNSHIP OF (MONROE COUNTY).	26115C0367D	20-APR-2000
05	MICHIGAN	BEDFORD, TOWNSHIP OF (MONROE COUNTY).	26115C0368D	20-APR-2000
05	MICHIGAN	BEDFORD, TOWNSHIP OF (MONROE COUNTY).	26115C0369D	20-APR-2000
05	MICHIGAN	BEDFORD, TOWNSHIP OF (MONROE COUNTY).	26115C0457D	20-APR-2000
05	MICHIGAN	BEDFORD, TOWNSHIP OF (MONROE COUNTY).	26115C0476D	20-APR-2000
05	MICHIGAN	BEDFORD, TOWNSHIP OF (MONROE COUNTY).	26115C0477D	20-APR-2000
05	MICHIGAN	BEDFORD, TOWNSHIP OF (MONROE COUNTY).	26115C0481D	20-APR-2000
05	MICHIGAN	BEDFORD, TOWNSHIP OF (MONROE COUNTY).	26115C0482D	20-APR-2000
05	MICHIGAN	BERLIN, TOWNSHIP OF	26115C0000	20-APR-2000
05	MICHIGAN	BERLIN, TOWNSHIP OF	26115C0108D	20-APR-2000
05	MICHIGAN	BERLIN, TOWNSHIP OF	26115C0109D	20-APR-2000
05	MICHIGAN	BERLIN, TOWNSHIP OF	26115C0114D	20-APR-2000
05	MICHIGAN	BERLIN, TOWNSHIP OF	26115C0116D	20-APR-2000
05	MICHIGAN	BERLIN, TOWNSHIP OF	26115C0117D	20-APR-2000
05	MICHIGAN	BERLIN, TOWNSHIP OF	26115C0118D	20-APR-2000
05	MICHIGAN	BERLIN, TOWNSHIP OF	26115C0119D	20-APR-2000
05	MICHIGAN	BERLIN, TOWNSHIP OF	26115C0136D	20-APR-2000
05	MICHIGAN	BERLIN, TOWNSHIP OF	26115C0140D	20-APR-2000
05	MICHIGAN	BERLIN, TOWNSHIP OF	26115C0145D	20-APR-2000
05	MICHIGAN	BERLIN, TOWNSHIP OF	26115C0252D	20-APR-2000
05	MICHIGAN	BERLIN, TOWNSHIP OF	26115C0256D	20-APR-2000
05	MICHIGAN	BERLIN, TOWNSHIP OF	26115C0257D	20-APR-2000
05	MICHIGAN	BERLIN, TOWNSHIP OF	26115C0280D	20-APR-2000
05	MICHIGAN	CARLETON, VILLAGE OF	26115C0000	20-APR-2000
05	MICHIGAN	CARLETON, VILLAGE OF	26115C0084D	20-APR-2000
05	MICHIGAN	CARLETON, VILLAGE OF	26115C0095D	20-APR-2000
05	MICHIGAN	DUNDEE, TOWNSHIP OF	26115C0000	20-APR-2000
05	MICHIGAN	DUNDEE, TOWNSHIP OF	26115C0175D	20-APR-2000
05	MICHIGAN	DUNDEE, TOWNSHIP OF	26115C0180D	20-APR-2000
05	MICHIGAN	DUNDEE, TOWNSHIP OF	26115C0183D	20-APR-2000
05	MICHIGAN	DUNDEE, TOWNSHIP OF	26115C0184D	20-APR-2000
05	MICHIGAN	DUNDEE, TOWNSHIP OF	26115C0185D	20-APR-2000
05	MICHIGAN	DUNDEE, TOWNSHIP OF	26115C0200D	20-APR-2000
05	MICHIGAN	DUNDEE, TOWNSHIP OF	26115C0205D	20-APR-2000
05	MICHIGAN	DUNDEE, TOWNSHIP OF	26115C0215D	20-APR-2000
05	MICHIGAN	ERIE, TOWNSHIP OF MONROE COUNTY	26115C0000	20-APR-2000
05	MICHIGAN	ERIE, TOWNSHIP OF MONROE COUNTY	26115C0360D	20-APR-2000
05	MICHIGAN	ERIE, TOWNSHIP OF MONROE COUNTY	26115C0367D	20-APR-2000
05	MICHIGAN	ERIE, TOWNSHIP OF MONROE COUNTY	26115C0369D	20-APR-2000
05	MICHIGAN	ERIE, TOWNSHIP OF MONROE COUNTY	26115C0379D	20-APR-2000
05	MICHIGAN	ERIE, TOWNSHIP OF MONROE COUNTY	26115C0380D	20-APR-2000
05	MICHIGAN	ERIE, TOWNSHIP OF MONROE COUNTY	26115C0383D	20-APR-2000
05	MICHIGAN	ERIE, TOWNSHIP OF MONROE COUNTY	26115C0386D	20-APR-2000
05	MICHIGAN	ERIE, TOWNSHIP OF MONROE COUNTY	26115C0387D	20-APR-2000
05	MICHIGAN	ERIE, TOWNSHIP OF MONROE COUNTY	26115C0388D	20-APR-2000
05	MICHIGAN	ERIE, TOWNSHIP OF MONROE COUNTY	26115C0389D	20-APR-2000
05	MICHIGAN	ERIE, TOWNSHIP OF MONROE COUNTY	26115C0395D	20-APR-2000
05	MICHIGAN	ERIE, TOWNSHIP OF MONROE COUNTY	26115C0482D	20-APR-2000
05	MICHIGAN	ERIE, TOWNSHIP OF MONROE COUNTY	26115C0501D	20-APR-2000
05	MICHIGAN	ERIE, TOWNSHIP OF MONROE COUNTY	26115C0502D	20-APR-2000
05	MICHIGAN	ERIE, TOWNSHIP OF MONROE COUNTY	26115C0510D	20-APR-2000

Region	State	Community	Panel	Panel date
05	MICHIGAN	ESTRAL BEACH, VILLAGE OF MONROE COUNTY.	26115C0000	20-APR-2000
05	MICHIGAN	ESTRAL BEACH, VILLAGE OF MONROE COUNTY.	26115C0280D	20-APR-2000
05	MICHIGAN	EXETER, TOWNSHIP OF MONROE COUNTY	26115C0000	20-APR-2000
05	MICHIGAN	EXETER, TOWNSHIP OF MONROE COUNTY	26115C0085D	20-APR-2000
05	MICHIGAN	EXETER, TOWNSHIP OF MONROE COUNTY	26115C0095D	20-APR-2000
05	MICHIGAN	EXETER, TOWNSHIP OF MONROE COUNTY	26115C0210D	20-APR-2000
05	MICHIGAN	EXETER, TOWNSHIP OF MONROE COUNTY	26115C0230D	20-APR-2000
05	MICHIGAN	FRENCHTOWN, TOWNSHIP OF	26115C0000	20-APR-2000
05	MICHIGAN	FRENCHTOWN, TOWNSHIP OF	26115C0094D	20-APR-2000
05	MICHIGAN	FRENCHTOWN, TOWNSHIP OF	26115C0095D	20-APR-2000
05	MICHIGAN	FRENCHTOWN, TOWNSHIP OF	26115C0113D	20-APR-2000
05	MICHIGAN	FRENCHTOWN, TOWNSHIP OF	26115C0114D	20-APR-2000
05	MICHIGAN	FRENCHTOWN, TOWNSHIP OF	26115C0230D	20-APR-2000
05	MICHIGAN	FRENCHTOWN, TOWNSHIP OF	26115C0232D	20-APR-2000
05	MICHIGAN	FRENCHTOWN, TOWNSHIP OF	26115C0234D	20-APR-2000
05	MICHIGAN	FRENCHTOWN, TOWNSHIP OF	26115C0235D	20-APR-2000
05	MICHIGAN	FRENCHTOWN, TOWNSHIP OF	26115C0237D	20-APR-2000
05	MICHIGAN	FRENCHTOWN, TOWNSHIP OF	26115C0241D	20-APR-2000
05	MICHIGAN	FRENCHTOWN, TOWNSHIP OF	26115C0242D	20-APR-2000
05	MICHIGAN	FRENCHTOWN, TOWNSHIP OF	26115C0251D	20-APR-2000
05	MICHIGAN	FRENCHTOWN, TOWNSHIP OF	26115C0252D	20-APR-2000
05	MICHIGAN	FRENCHTOWN, TOWNSHIP OF	26115C0253D	20-APR-2000
05	MICHIGAN	FRENCHTOWN, TOWNSHIP OF	26115C0254D	20-APR-2000
05	MICHIGAN	FRENCHTOWN, TOWNSHIP OF	26115C0256D	20-APR-2000
05	MICHIGAN	FRENCHTOWN, TOWNSHIP OF	26115C0257D	20-APR-2000
05	MICHIGAN	FRENCHTOWN, TOWNSHIP OF	26115C0258D	20-APR-2000
05	MICHIGAN	FRENCHTOWN, TOWNSHIP OF	26115C0261D	20-APR-2000
05	MICHIGAN	FRENCHTOWN, TOWNSHIP OF	26115C0262D	20-APR-2000
05	MICHIGAN	FRENCHTOWN, TOWNSHIP OF	26115C0263D	20-APR-2000
05	MICHIGAN	FRENCHTOWN, TOWNSHIP OF	26115C0264D	20-APR-2000
05	MICHIGAN	FRENCHTOWN, TOWNSHIP OF	26115C0270D	20-APR-2000
05	MICHIGAN	FRENCHTOWN, TOWNSHIP OF	26115C0280D	20-APR-2000
05	MICHIGAN	FRENCHTOWN, TOWNSHIP OF	26115C0405D	20-APR-2000
05	MICHIGAN	IDA, TOWNSHIP OF	26115C0000	20-APR-2000
05	MICHIGAN	IDA, TOWNSHIP OF	26115C0200D	20-APR-2000
05	MICHIGAN	IDA, TOWNSHIP OF	26115C0215D	20-APR-2000
05	MICHIGAN	IDA, TOWNSHIP OF	26115C0220D	20-APR-2000
05	MICHIGAN	IDA, TOWNSHIP OF	26115C0350D	20-APR-2000
05	MICHIGAN	IDA, TOWNSHIP OF	26115C0355D	20-APR-2000
05	MICHIGAN	IDA, TOWNSHIP OF	26115C0360D	20-APR-2000
05	MICHIGAN	LASALLE, TOWNSHIP OF	26115C0000	20-APR-2000
05	MICHIGAN	LASALLE, TOWNSHIP OF	26115C0220D	20-APR-2000
05	MICHIGAN	LASALLE, TOWNSHIP OF	26115C0238D	20-APR-2000
05	MICHIGAN	LASALLE, TOWNSHIP OF	26115C0239D	20-APR-2000
05	MICHIGAN	LASALLE, TOWNSHIP OF	26115C0360D	20-APR-2000
05	MICHIGAN	LASALLE, TOWNSHIP OF	26115C0377D	20-APR-2000
05	MICHIGAN	LASALLE, TOWNSHIP OF	26115C0379D	20-APR-2000
05	MICHIGAN	LASALLE, TOWNSHIP OF	26115C0380D	20-APR-2000
05	MICHIGAN	LASALLE, TOWNSHIP OF	26115C0381D	20-APR-2000
05	MICHIGAN	LASALLE, TOWNSHIP OF	26115C0382D	20-APR-2000
05	MICHIGAN	LASALLE, TOWNSHIP OF	26115C0383D	20-APR-2000
05	MICHIGAN	LASALLE, TOWNSHIP OF	26115C0384D	20-APR-2000
05	MICHIGAN	LONDON, TOWNSHIP OF	26115C0000	20-APR-2000
05	MICHIGAN	LONDON, TOWNSHIP OF	26115C0035D	20-APR-2000
05	MICHIGAN	LONDON, TOWNSHIP OF	26115C0045D	20-APR-2000
05	MICHIGAN	LONDON, TOWNSHIP OF	26115C0055D	20-APR-2000
05	MICHIGAN	LONDON, TOWNSHIP OF	26115C0060D	20-APR-2000
05	MICHIGAN	LONDON, TOWNSHIP OF	26115C0065D	20-APR-2000
05	MICHIGAN	LONDON, TOWNSHIP OF	26115C0185D	20-APR-2000
05	MICHIGAN	LONDON, TOWNSHIP OF	26115C0205D	20-APR-2000
05	MICHIGAN	LONDON, TOWNSHIP OF	26115C0210D	20-APR-2000
05	MICHIGAN	LUNA PIER, CITY OF	26115C0000	20-APR-2000
05	MICHIGAN	LUNA PIER, CITY OF	26115C0379D	20-APR-2000
05	MICHIGAN	LUNA PIER, CITY OF	26115C0383D	20-APR-2000
05	MICHIGAN	LUNA PIER, CITY OF	26115C0387D	20-APR-2000
05	MICHIGAN	MAYBEE, VILLAGE OF (MONROE COUNTY)	26115C0000	20-APR-2000
05	MICHIGAN	MAYBEE, VILLAGE OF (MONROE COUNTY)	26115C0210D	20-APR-2000
05	MICHIGAN	MILAN, TOWNSHIP OF	26115C0000	20-APR-2000
05	MICHIGAN	MILAN, TOWNSHIP OF	26115C0010D	20-APR-2000
05	MICHIGAN	MILAN, TOWNSHIP OF	26115C0020D	20-APR-2000
05	MICHIGAN	MILAN, TOWNSHIP OF	26115C0030D	20-APR-2000
05	MICHIGAN	MILAN, TOWNSHIP OF	26115C0035D	20-APR-2000

Region	State	Community	Panel	Panel date
05	MICHIGAN	MILAN, TOWNSHIP OF	26115C0040D	20-APR-2000
05	MICHIGAN	MILAN, TOWNSHIP OF	26115C0045D	20-APR-2000
05	MICHIGAN	MILAN, TOWNSHIP OF	26115C0175D	20-APR-2000
05	MICHIGAN	MILAN, TOWNSHIP OF	26115C0180D	20-APR-2000
05	MICHIGAN	MILAN, TOWNSHIP OF	26115C0185D	20-APR-2000
05	MICHIGAN	MONROE, CITY OF	26115C0000	20-APR-2000
05	MICHIGAN	MONROE, CITY OF	26115C0234D	20-APR-2000
05	MICHIGAN	MONROE, CITY OF	26115C0235D	20-APR-2000
05	MICHIGAN	MONROE, CITY OF	26115C0237D	20-APR-2000
05	MICHIGAN	MONROE, CITY OF	26115C0241D	20-APR-2000
05	MICHIGAN	MONROE, CITY OF	26115C0242D	20-APR-2000
05	MICHIGAN	MONROE, CITY OF	26115C0244D	20-APR-2000
05	MICHIGAN	MONROE, CITY OF	26115C0253D	20-APR-2000
05	MICHIGAN	MONROE, CITY OF	26115C0261D	20-APR-2000
05	MICHIGAN	MONROE, CITY OF	26115C0262D	20-APR-2000
05	MICHIGAN	MONROE, CITY OF	26115C0263D	20-APR-2000
05	MICHIGAN	MONROE, CITY OF	26115C0264D	20-APR-2000
05	MICHIGAN	MONROE, TOWNSHIP OF	26115C0000	20-APR-2000
05	MICHIGAN	MONROE, TOWNSHIP OF	26115C0236D	20-APR-2000
05	MICHIGAN	MONROE, TOWNSHIP OF	26115C0237D	20-APR-2000
05	MICHIGAN	MONROE, TOWNSHIP OF	26115C0238D	20-APR-2000
05	MICHIGAN	MONROE, TOWNSHIP OF	26115C0239D	20-APR-2000
05	MICHIGAN	MONROE, TOWNSHIP OF	26115C0241D	20-APR-2000
05	MICHIGAN	MONROE, TOWNSHIP OF	26115C0242D	20-APR-2000
05	MICHIGAN	MONROE, TOWNSHIP OF	26115C0243D	20-APR-2000
05	MICHIGAN	MONROE, TOWNSHIP OF	26115C0244D	20-APR-2000
05	MICHIGAN	MONROE, TOWNSHIP OF	26115C0263D	20-APR-2000
05	MICHIGAN	MONROE, TOWNSHIP OF	26115C0377D	20-APR-2000
05	MICHIGAN	MONROE, TOWNSHIP OF	26115C0381D	20-APR-2000
05	MICHIGAN	MONROE, TOWNSHIP OF	26115C0382D	20-APR-2000
05	MICHIGAN	MONROE, TOWNSHIP OF	26115C0405D	20-APR-2000
05	MICHIGAN	PETERSBURG, CITY OF	26115C0000	20-APR-2000
05	MICHIGAN	PETERSBURG, CITY OF	26115C0200D	20-APR-2000
05	MICHIGAN	RAISINVILLE, TOWNSHIP OF	26115C0000	20-APR-2000
05	MICHIGAN	RAISINVILLE, TOWNSHIP OF	26115C0095D	20-APR-2000
05	MICHIGAN	RAISINVILLE, TOWNSHIP OF	26115C0205D	20-APR-2000
05	MICHIGAN	RAISINVILLE, TOWNSHIP OF	26115C0210D	20-APR-2000
05	MICHIGAN	RAISINVILLE, TOWNSHIP OF	26115C0215D	20-APR-2000
05	MICHIGAN	RAISINVILLE, TOWNSHIP OF	26115C0220D	20-APR-2000
05	MICHIGAN	RAISINVILLE, TOWNSHIP OF	26115C0230D	20-APR-2000
05	MICHIGAN	RAISINVILLE, TOWNSHIP OF	26115C0235D	20-APR-2000
05	MICHIGAN	RAISINVILLE, TOWNSHIP OF	26115C0236D	20-APR-2000
05	MICHIGAN	RAISINVILLE, TOWNSHIP OF	26115C0237D	20-APR-2000
05	MICHIGAN	RAISINVILLE, TOWNSHIP OF	26115C0238D	20-APR-2000
05	MICHIGAN	SOUTH ROCKWOOD, VILLAGE OF	26115C0000	20-APR-2000
05	MICHIGAN	SOUTH ROCKWOOD, VILLAGE OF	26115C0109D	20-APR-2000
05	MICHIGAN	SOUTH ROCKWOOD, VILLAGE OF	26115C0117D	20-APR-2000
05	MICHIGAN	SOUTH ROCKWOOD, VILLAGE OF	26115C0136D	20-APR-2000
05	MICHIGAN	SUMMERFIELD, TOWNSHIP OF	26115C0000	20-APR-2000
05	MICHIGAN	SUMMERFIELD, TOWNSHIP OF	26115C0175D	20-APR-2000
05	MICHIGAN	SUMMERFIELD, TOWNSHIP OF	26115C0200D	20-APR-2000
05	MICHIGAN	SUMMERFIELD, TOWNSHIP OF	26115C0350D	20-APR-2000
05	MICHIGAN	WHITEFORD, TOWNSHIP OF	26115C0000	20-APR-2000
05	MICHIGAN	WHITEFORD, TOWNSHIP OF	26115C0310D	20-APR-2000
05	MICHIGAN	WHITEFORD, TOWNSHIP OF	26115C0320D	20-APR-2000
05	MICHIGAN	WHITEFORD, TOWNSHIP OF	26115C0340D	20-APR-2000
05	MICHIGAN	WHITEFORD, TOWNSHIP OF	26115C0344D	20-APR-2000
05	MICHIGAN	WHITEFORD, TOWNSHIP OF	26115C0345D	20-APR-2000
05	MICHIGAN	WHITEFORD, TOWNSHIP OF	26115C0350D	20-APR-2000
05	MICHIGAN	WHITEFORD, TOWNSHIP OF	26115C0435D	20-APR-2000
05	MICHIGAN	WHITEFORD, TOWNSHIP OF	26115C0451D	20-APR-2000
05	MICHIGAN	WHITEFORD, TOWNSHIP OF	26115C0452D	20-APR-2000
05	MICHIGAN	WHITEFORD, TOWNSHIP OF	26115C0456D	20-APR-2000
05	MICHIGAN	WHITEFORD, TOWNSHIP OF	26115C0457D	20-APR-2000
05	MINNESOTA	BECKER, CITY OF(SHERBURNE COUNTY)	27141C0000	04-MAY-2000
05	MINNESOTA	BECKER, CITY OF(SHERBURNE COUNTY)	27141C0220E	04-MAY-2000
05	MINNESOTA	BECKER, CITY OF(SHERBURNE COUNTY)	27141C0240E	04-MAY-2000
05	MINNESOTA	BECKER, CITY OF(SHERBURNE COUNTY)	27141C0310E	04-MAY-2000
05	MINNESOTA	BECKER, CITY OF(SHERBURNE COUNTY)	27141C0330E	04-MAY-2000
05	MINNESOTA	BELLECHESTER, CITY OF (WABASHA AND GOODHUE COUNTIES).	2707540000	20-JUN-2000
05	MINNESOTA	BELLECHESTER, CITY OF (WABASHA AND GOODHUE COUNTIES).	2707540110D**	20-JUN-2000
05	MINNESOTA	BIG LAKE, CITY OF (SHERBURNE COUNTY)	27141C0000	04-MAY-2000

Region	State	Community	Panel	Panel date
05	MINNESOTA	BIG LAKE, CITY OF (SHERBURNE COUNTY)	27141C0335E	04-MAY-2000
05	MINNESOTA	BIG LAKE, CITY OF (SHERBURNE COUNTY)	27141C0355E**	04-MAY-2000
05	MINNESOTA	BROWN COUNTY	27015C0000	06-JUN-2000
05	MINNESOTA	BROWN COUNTY	27015C0005C	06-JUN-2000
05	MINNESOTA	BROWN COUNTY	27015C0010C	06-JUN-2000
05	MINNESOTA	BROWN COUNTY	27015C0025C	06-JUN-2000
05	MINNESOTA	BROWN COUNTY	27015C0030C	06-JUN-2000
05	MINNESOTA	BROWN COUNTY	27015C0040C	06-JUN-2000
05	MINNESOTA	BROWN COUNTY	27015C0045C	06-JUN-2000
05	MINNESOTA	BROWN COUNTY	27015C0065C	06-JUN-2000
05	MINNESOTA	BROWN COUNTY	27015C0100C**	06-JUN-2000
05	MINNESOTA	BROWN COUNTY	27015C0125C	06-JUN-2000
05	MINNESOTA	BROWN COUNTY	27015C0150C	06-JUN-2000
05	MINNESOTA	BROWN COUNTY	27015C0175C	06-JUN-2000
05	MINNESOTA	BROWN COUNTY	27015C0180C	06-JUN-2000
05	MINNESOTA	BROWN COUNTY	27015C0185C	06-JUN-2000
05	MINNESOTA	BROWN COUNTY	27015C0190C	06-JUN-2000
05	MINNESOTA	BROWN COUNTY	27015C0195C	06-JUN-2000
05	MINNESOTA	BROWN COUNTY	27015C0205C	06-JUN-2000
05	MINNESOTA	BROWN COUNTY	27015C0215C	06-JUN-2000
05	MINNESOTA	BROWN COUNTY	27015C0220C	06-JUN-2000
05	MINNESOTA	BROWN COUNTY	27015C0250C	06-JUN-2000
05	MINNESOTA	BROWN COUNTY	27015C0255C	06-JUN-2000
05	MINNESOTA	BROWN COUNTY	27015C0275C	06-JUN-2000
05	MINNESOTA	BROWN COUNTY	27015C0300C	06-JUN-2000
05	MINNESOTA	BROWN COUNTY	27015C0325C	06-JUN-2000
05	MINNESOTA	BROWN COUNTY	27015C0350C**	06-JUN-2000
05	MINNESOTA	BROWN COUNTY	27015C0375C**	06-JUN-2000
05	MINNESOTA	BROWN COUNTY	27015C0400C	06-JUN-2000
05	MINNESOTA	BROWN COUNTY	27015C0425C**	06-JUN-2000
05	MINNESOTA	BROWN COUNTY	27015C0450C	06-JUN-2000
05	MINNESOTA	BROWN COUNTY	27015C0475C	06-JUN-2000
05	MINNESOTA	BROWN COUNTY	27015C0500C**	06-JUN-2000
05	MINNESOTA	CLEAR LAKE, CITY OF (SHERBURNE CO.)	27141C0000	04-MAY-2000
05	MINNESOTA	CLEAR LAKE, CITY OF (SHERBURNE CO.)	27141C0185E**	04-MAY-2000
05	MINNESOTA	CLEAR LAKE, CITY OF (SHERBURNE CO.)	27141C0205E	04-MAY-2000
05	MINNESOTA	COBDEN, CITY OF (BROWN COUNTY)	27015C0000	06-JUN-2000
05	MINNESOTA	COBDEN, CITY OF (BROWN COUNTY)	27015C0150C	06-JUN-2000
05	MINNESOTA	COMFREY, CITY OF	27015C0000	06-JUN-2000
05	MINNESOTA	COMFREY, CITY OF	27015C0425C**	06-JUN-2000
05	MINNESOTA	ELGIN, CITY OF (WABASHA COUNTY)	27151C0000	20-JUN-2000
05	MINNESOTA	ELGIN, CITY OF (WABASHA COUNTY)	27151C0320D	20-JUN-2000
05	MINNESOTA	ELGIN, CITY OF (WABASHA COUNTY)	27151C0340D	20-JUN-2000
05	MINNESOTA	ELK RIVER, CITY OF (SHERBURNE COUNTY).	27141C0000	04-MAY-2000
05	MINNESOTA	ELK RIVER, CITY OF (SHERBURNE COUNTY).	27141C0270E	04-MAY-2000
05	MINNESOTA	ELK RIVER, CITY OF (SHERBURNE COUNTY).	27141C0360E	04-MAY-2000
05	MINNESOTA	ELK RIVER, CITY OF (SHERBURNE COUNTY).	27141C0370E	04-MAY-2000
05	MINNESOTA	ELK RIVER, CITY OF (SHERBURNE COUNTY).	27141C0380E	04-MAY-2000
05	MINNESOTA	ELK RIVER, CITY OF (SHERBURNE COUNTY).	27141C0385E	04-MAY-2000
05	MINNESOTA	ELK RIVER, CITY OF (SHERBURNE COUNTY).	27141C0390E	04-MAY-2000
05	MINNESOTA	ELK RIVER, CITY OF (SHERBURNE COUNTY).	27141C0395E	04-MAY-2000
05	MINNESOTA	ELK RIVER, CITY OF (SHERBURNE COUNTY).	27141C0410E	04-MAY-2000
05	MINNESOTA	EVAN, CITY OF (BROWN COUNTY)	27015C0000	06-JUN-2000
05	MINNESOTA	EVAN, CITY OF (BROWN COUNTY)	27015C0150C	06-JUN-2000
05	MINNESOTA	HAMMOND, CITY OF (WABASHA COUNTY)	27151C0000	20-JUN-2000
05	MINNESOTA	HAMMOND, CITY OF (WABASHA COUNTY)	27151C0282D	20-JUN-2000
05	MINNESOTA	HAMMOND, CITY OF (WABASHA COUNTY)	27151C0301D	20-JUN-2000
05	MINNESOTA	HANSKA, CITY OF (BROWN COUNTY)	27015C0000	06-JUN-2000
05	MINNESOTA	HANSKA, CITY OF (BROWN COUNTY)	27015C0375C**	06-JUN-2000
05	MINNESOTA	KELLOGG, CITY OF (WABASHA COUNTY)	27151C0000	20-JUN-2000
05	MINNESOTA	KELLOGG, CITY OF (WABASHA COUNTY)	27151C225D**	20-JUN-2000
05	MINNESOTA	KELLOGG, CITY OF (WABASHA COUNTY)	27151C240D	20-JUN-2000
05	MINNESOTA	LAKE CITY, CITY OF (WABASHA AND GOODHUE COUNTIES).	27151C0000	20-JUN-2000

Region	State	Community	Panel	Panel date
05	MINNESOTA	LAKE CITY, CITY OF (WABASHA AND GOODHUE COUNTIES).	27151C0031D	20-JUN-2000
05	MINNESOTA	LAKE CITY, CITY OF (WABASHA AND GOODHUE COUNTIES).	27151C0032D**	20-JUN-2000
05	MINNESOTA	LAKE CITY, CITY OF (WABASHA AND GOODHUE COUNTIES).	27151C0033D	20-JUN-2000
05	MINNESOTA	LAKE CITY, CITY OF (WABASHA AND GOODHUE COUNTIES).	27151C0034D	20-JUN-2000
05	MINNESOTA	LAKE CITY, CITY OF (WABASHA AND GOODHUE COUNTIES).	27151C0041D**	20-JUN-2000
05	MINNESOTA	LAKE CITY, CITY OF (WABASHA AND GOODHUE COUNTIES).	27151C0042D	20-JUN-2000
05	MINNESOTA	LAKE CITY, CITY OF (WABASHA AND GOODHUE COUNTIES).	27151C0065D	20-JUN-2000
05	MINNESOTA	MAZEPPA, CITY OF (WABASHA COUNTY)	27151C0000	20-JUN-2000
05	MINNESOTA	MAZEPPA, CITY OF (WABASHA COUNTY)	27151C0116D	20-JUN-2000
05	MINNESOTA	MAZEPPA, CITY OF (WABASHA COUNTY)	27151C0118D	20-JUN-2000
05	MINNESOTA	MILLVILLE, CITY OF (WABASHA COUNTY)	27151C0000	20-JUN-2000
05	MINNESOTA	MILLVILLE, CITY OF (WABASHA COUNTY)	27151C0306D	20-JUN-2000
05	MINNESOTA	MINNEISKA, CITY OF (WABASHA AND WINONA COUNTIES).	27151C0000	20-JUN-2000
05	MINNESOTA	MINNEISKA, CITY OF (WABASHA AND WINONA COUNTIES).	27151C0385D	20-JUN-2000
05	MINNESOTA	MINNEISKA, CITY OF (WABASHA AND WINONA COUNTIES).	27151C0405D	20-JUN-2000
05	MINNESOTA	MINNEOTA, CITY OF	2702590001B	06-APR-2000
05	MINNESOTA	NEW ULM, CITY OF (BROWN COUNTY)	27015C0000	06-JUN-2000
05	MINNESOTA	NEW ULM, CITY OF (BROWN COUNTY)	27015C0185C	06-JUN-2000
05	MINNESOTA	NEW ULM, CITY OF (BROWN COUNTY)	27015C0205C	06-JUN-2000
05	MINNESOTA	NEW ULM, CITY OF (BROWN COUNTY)	27015C0215C	06-JUN-2000
05	MINNESOTA	NEW ULM, CITY OF (BROWN COUNTY)	27015C0220C	06-JUN-2000
05	MINNESOTA	PLAINVIEW, CITY OF (WABASHA COUNTY)	27151C0000	20-JUN-2000
05	MINNESOTA	PLAINVIEW, CITY OF (WABASHA COUNTY)	27151C0340D**	20-JUN-2000
05	MINNESOTA	PLAINVIEW, CITY OF (WABASHA COUNTY)	27151C0350D**	20-JUN-2000
05	MINNESOTA	SHERBURNE COUNTY *	27141C0000	04-MAY-2000
05	MINNESOTA	SHERBURNE COUNTY *	27141C0005E	04-MAY-2000
05	MINNESOTA	SHERBURNE COUNTY *	27141C0020E	04-MAY-2000
05	MINNESOTA	SHERBURNE COUNTY *	27141C0045E	04-MAY-2000
05	MINNESOTA	SHERBURNE COUNTY *	27141C0065E	04-MAY-2000
05	MINNESOTA	SHERBURNE COUNTY *	27141C0070E	04-MAY-2000
05	MINNESOTA	SHERBURNE COUNTY *	27141C0100E	04-MAY-2000
05	MINNESOTA	SHERBURNE COUNTY *	27141C0125E	04-MAY-2000
05	MINNESOTA	SHERBURNE COUNTY *	27141C0150E	04-MAY-2000
05	MINNESOTA	SHERBURNE COUNTY *	27141C0160E	04-MAY-2000
05	MINNESOTA	SHERBURNE COUNTY *	27141C0180E	04-MAY-2000
05	MINNESOTA	SHERBURNE COUNTY *	27141C0185E	04-MAY-2000
05	MINNESOTA	SHERBURNE COUNTY *	27141C0195E	04-MAY-2000
05	MINNESOTA	SHERBURNE COUNTY *	27141C0210E	04-MAY-2000
05	MINNESOTA	SHERBURNE COUNTY *	27141C0215E	04-MAY-2000
05	MINNESOTA	SHERBURNE COUNTY *	27141C0220E	04-MAY-2000
05	MINNESOTA	SHERBURNE COUNTY *	27141C0240E	04-MAY-2000
05	MINNESOTA	SHERBURNE COUNTY *	27141C0245E	04-MAY-2000
05	MINNESOTA	SHERBURNE COUNTY *	27141C0265E	04-MAY-2000
05	MINNESOTA	SHERBURNE COUNTY *	27141C0270E	04-MAY-2000
05	MINNESOTA	SHERBURNE COUNTY *	27141C0275E	04-MAY-2000
05	MINNESOTA	SHERBURNE COUNTY *	27141C0310E	04-MAY-2000
05	MINNESOTA	SHERBURNE COUNTY *	27141C0330E	04-MAY-2000
05	MINNESOTA	SHERBURNE COUNTY *	27141C0335E	04-MAY-2000
05	MINNESOTA	SHERBURNE COUNTY *	27141C0345E	04-MAY-2000
05	MINNESOTA	SHERBURNE COUNTY *	27141C0355E	04-MAY-2000
05	MINNESOTA	SHERBURNE COUNTY *	27141C0360E	04-MAY-2000
05	MINNESOTA	SHERBURNE COUNTY *	27141C0365E	04-MAY-2000
05	MINNESOTA	SHERBURNE COUNTY *	27141C0370E	04-MAY-2000
05	MINNESOTA	SHERBURNE COUNTY *	27141C0380E	04-MAY-2000
05	MINNESOTA	SHERBURNE COUNTY *	27141C0385E	04-MAY-2000
05	MINNESOTA	SHERBURNE COUNTY *	27141C0390E	04-MAY-2000
05	MINNESOTA	SHERBURNE COUNTY *	27141C0395E	04-MAY-2000
05	MINNESOTA	SHERBURNE COUNTY *	27141C0410E	04-MAY-2000
05	MINNESOTA	SLEEPY EYE, CITY OF (BROWN COUNTY)	270150175C	06-JUN-2000
05	MINNESOTA	SLEEPY EYE, CITY OF (BROWN COUNTY)	27015C0000	06-JUN-2000
05	MINNESOTA	SPRINGFIELD, CITY OF (BROWN COUNTY)	27015C0000	06-JUN-2000
05	MINNESOTA	SPRINGFIELD, CITY OF (BROWN COUNTY)	27015C0255C	06-JUN-2000
05	MINNESOTA	WABASHA COUNTY	27151C0000	20-JUN-2000
05	MINNESOTA	WABASHA COUNTY	27151C0029D**	20-JUN-2000

Region	State	Community	Panel	Panel date
05	MINNESOTA	WABASHA COUNTY	27151C0031D	20-JUN-2000
05	MINNESOTA	WABASHA COUNTY	27151C0032D	20-JUN-2000
05	MINNESOTA	WABASHA COUNTY	27151C0033D	20-JUN-2000
05	MINNESOTA	WABASHA COUNTY	27151C0034D	20-JUN-2000
05	MINNESOTA	WABASHA COUNTY	27151C0041D**	20-JUN-2000
05	MINNESOTA	WABASHA COUNTY	27151C0042D	20-JUN-2000
05	MINNESOTA	WABASHA COUNTY	27151C0065D	20-JUN-2000
05	MINNESOTA	WABASHA COUNTY	27151C0070D	20-JUN-2000
05	MINNESOTA	WABASHA COUNTY	27151C0090D	20-JUN-2000
05	MINNESOTA	WABASHA COUNTY	27151C0110D**	20-JUN-2000
05	MINNESOTA	WABASHA COUNTY	27151C0116D	20-JUN-2000
05	MINNESOTA	WABASHA COUNTY	27151C0117D**	20-JUN-2000
05	MINNESOTA	WABASHA COUNTY	27151C0118D	20-JUN-2000
05	MINNESOTA	WABASHA COUNTY	27151C0119D	20-JUN-2000
05	MINNESOTA	WABASHA COUNTY	27151C0140D	20-JUN-2000
05	MINNESOTA	WABASHA COUNTY	27151C0141D	20-JUN-2000
05	MINNESOTA	WABASHA COUNTY	27151C0145D	20-JUN-2000
05	MINNESOTA	WABASHA COUNTY	27151C0155D**	20-JUN-2000
05	MINNESOTA	WABASHA COUNTY	27151C0160D**	20-JUN-2000
05	MINNESOTA	WABASHA COUNTY	27151C0165D**	20-JUN-2000
05	MINNESOTA	WABASHA COUNTY	27151C0170D	20-JUN-2000
05	MINNESOTA	WABASHA COUNTY	27151C0200D	20-JUN-2000
05	MINNESOTA	WABASHA COUNTY	27151C0210D	20-JUN-2000
05	MINNESOTA	WABASHA COUNTY	27151C0225D**	20-JUN-2000
05	MINNESOTA	WABASHA COUNTY	27151C0230D	20-JUN-2000
05	MINNESOTA	WABASHA COUNTY	27151C0235D**	20-JUN-2000
05	MINNESOTA	WABASHA COUNTY	27151C0240D	20-JUN-2000
05	MINNESOTA	WABASHA COUNTY	27151C0245D	20-JUN-2000
05	MINNESOTA	WABASHA COUNTY	27151C0260D**	20-JUN-2000
05	MINNESOTA	WABASHA COUNTY	27151C0280D	20-JUN-2000
05	MINNESOTA	WABASHA COUNTY	27151C0282D	20-JUN-2000
05	MINNESOTA	WABASHA COUNTY	27151C0301D	20-JUN-2000
05	MINNESOTA	WABASHA COUNTY	27151C0305D	20-JUN-2000
05	MINNESOTA	WABASHA COUNTY	27151C0306D	20-JUN-2000
05	MINNESOTA	WABASHA COUNTY	27151C0310D**	20-JUN-2000
05	MINNESOTA	WABASHA COUNTY	27151C0315D**	20-JUN-2000
05	MINNESOTA	WABASHA COUNTY	27151C0320D	20-JUN-2000
05	MINNESOTA	WABASHA COUNTY	27151C0340D**	20-JUN-2000
05	MINNESOTA	WABASHA COUNTY	27151C0350D**	20-JUN-2000
05	MINNESOTA	WABASHA COUNTY	27151C0375D**	20-JUN-2000
05	MINNESOTA	WABASHA COUNTY	27151C0380D	20-JUN-2000
05	MINNESOTA	WABASHA COUNTY	27151C0385D	20-JUN-2000
05	MINNESOTA	WABASHA COUNTY	27151C0405D	20-JUN-2000
05	MINNESOTA	WABASHA COUNTY	27151C0435D**	20-JUN-2000
05	MINNESOTA	WABASHA COUNTY	27151C0475D**	20-JUN-2000
05	MINNESOTA	WABASHA, CITY OF (WABASHA COUNTY)	27151C0000	20-JUN-2000
05	MINNESOTA	WABASHA, CITY OF (WABASHA COUNTY)	27151C0090D	20-JUN-2000
05	MINNESOTA	WABASHA, CITY OF (WABASHA COUNTY)	27151C0095D	20-JUN-2000
05	MINNESOTA	WABASHA, CITY OF (WABASHA COUNTY)	27151C0210D	20-JUN-2000
05	MINNESOTA	WABASHA, CITY OF (WABASHA COUNTY)	27151C0225D**	20-JUN-2000
05	MINNESOTA	WABASHA, CITY OF (WABASHA COUNTY)	27151C0230D	20-JUN-2000
05	MINNESOTA	ZIMMERMAN, CITY OF (SHERBURNE COUNTY).	27141C0000	04-MAY-2000
05	MINNESOTA	ZUMBRO FALLS, CITY OF (WABASHA COUNTY).	27151C0000	20-JUN-2000
05	MINNESOTA	ZUMBRO FALLS, CITY OF (WABASHA COUNTY).	27151C0141D	20-JUN-2000
05	OHIO	WAYNE LAKES, VILLAGE OF (DARKE COUNTY0.	3909040001D	20-JUN-2000
05	WISCONSIN	CRAWFORD COUNTY	5555510000	18-MAY-2000
05	WISCONSIN	CRAWFORD COUNTY	5555510025D	18-MAY-2000
05	WISCONSIN	CRAWFORD COUNTY	5555510035D	18-MAY-2000
05	WISCONSIN	CRAWFORD COUNTY	5555510100D	18-MAY-2000
05	WISCONSIN	CRAWFORD COUNTY	5555510175D	18-MAY-2000
05	WISCONSIN	CRAWFORD COUNTY	5555510180D	18-MAY-2000
05	WISCONSIN	CRAWFORD COUNTY	5555510185D	18-MAY-2000
05	WISCONSIN	CRAWFORD COUNTY	5555510190D	18-MAY-2000
05	WISCONSIN	CRAWFORD COUNTY	5555510195D	18-MAY-2000
05	WISCONSIN	CRAWFORD COUNTY	5555510205D	18-MAY-2000
05	WISCONSIN	CRAWFORD COUNTY	5555510250D	18-MAY-2000
05	WISCONSIN	CRAWFORD COUNTY	5555510255D	18-MAY-2000
05	WISCONSIN	FOND DU LAC COUNTY	5501310000	06-JUN-2000
05	WISCONSIN	FOND DU LAC COUNTY	5501310130C	06-JUN-2000
05	WISCONSIN	FOND DU LAC COUNTY	5501310135D	06-JUN-2000

Region	State	Community	Panel	Panel date
05	WISCONSIN	FOND DU LAC COUNTY	5501310155D	06-JUN-2000
05	WISCONSIN	FOND DU LAC COUNTY	5501310170C	06-JUN-2000
06	AR	ADONA, CITY OF	05105CIND0 **	20-JUN-2000
06	AR	BIGELOW, TOWN OF	05105CIND0 **	20-JUN-2000
06	AR	CASA, CITY OF	05105CIND0 **	20-JUN-2000
06	AR	FOURCHE, CITY OF	05105CIND0 **	20-JUN-2000
06	AR	HOUSTON, TOWN OF	05105CIND0 **	20-JUN-2000
06	AR	PERRY COUNTY	05105C0039C	20-JUN-2000
06	AR	PERRY COUNTY	05105C0050C	20-JUN-2000
06	AR	PERRY COUNTY	05105C0127C	20-JUN-2000
06	AR	PERRY COUNTY	05105CIND0 **	20-JUN-2000
06	AR	PERRY, TOWN OF	05105C0127C	20-JUN-2000
06	AR	PERRY, TOWN OF	05105CIND0 **	20-JUN-2000
06	AR	PERRYVILLE, CITY OF	05105C0127C	20-JUN-2000
06	AR	PERRYVILLE, CITY OF	05105CIND0 **	20-JUN-2000
06	AR	WEST MEMPHIS, CITY OF	0500550008D**	04-MAY-2000
06	AR	WEST MEMPHIS, CITY OF	0500550009D**	04-MAY-2000
06	AR	WEST MEMPHIS, CITY OF	0500550012D**	04-MAY-2000
06	AR	WEST MEMPHIS, CITY OF	0500550014D**	04-MAY-2000
06	AR	WEST MEMPHIS, CITY OF	0500550016D**	04-MAY-2000
06	AR	WEST MEMPHIS, CITY OF	0500550017D**	04-MAY-2000
06	AR	WEST MEMPHIS, CITY OF	0500550018D**	04-MAY-2000
06	AR	WEST MEMPHIS, CITY OF	0500550019D**	04-MAY-2000
06	AR	WEST MEMPHIS, CITY OF	050055IND0 **	04-MAY-2000
06	AR	WHITE COUNTY *	0504670001B***	01-MAR-2000
06	AR	WHITE COUNTY *	0504670002B***	01-MAR-2000
06	AR	WHITE COUNTY *	0504670003B***	01-MAR-2000
06	AR	WHITE COUNTY *	0504670004B***	01-MAR-2000
06	AR	WHITE COUNTY *	0504670005B***	01-MAR-2000
06	AR	WHITE COUNTY *	0504670006B***	01-MAR-2000
06	AR	WHITE COUNTY *	0504670007B***	01-MAR-2000
06	AR	WHITE COUNTY *	0504670008B***	01-MAR-2000
06	AR	WHITE COUNTY *	0504670009B***	01-MAR-2000
06	AR	WHITE COUNTY *	0504670010B***	01-MAR-2000
06	AR	WHITE COUNTY *	0504670011B***	01-MAR-2000
06	AR	WHITE COUNTY *	0504670012B***	01-MAR-2000
06	AR	WHITE COUNTY *	0504670013B***	01-MAR-2000
06	AR	WHITE COUNTY *	0504670014B***	01-MAR-2000
06	AR	WHITE COUNTY *	0504670015B***	01-MAR-2000
06	AR	WHITE COUNTY *	0504679999B***	01-MAR-2000
06	AR	WHITE COUNTY *	050467IND0 ***	01-MAR-2000
06	LA	BELCHER, VILLAGE OF	22017C0214F	06-APR-2000
06	LA	BELCHER, VILLAGE OF	22017C0225F	06-APR-2000
06	LA	BELCHER, VILLAGE OF	22017C0276F	06-APR-2000
06	LA	BELCHER, VILLAGE OF	22017C0277F	06-APR-2000
06	LA	BELCHER, VILLAGE OF	22017CIND0 **	06-APR-2000
06	LA	BLANCHARD, VILLAGE OF	22017C0335F	06-APR-2000
06	LA	BLANCHARD, VILLAGE OF	22017C0355F	06-APR-2000
06	LA	BLANCHARD, VILLAGE OF	22017CIND0 **	06-APR-2000
06	LA	CADDO PARISH*	22017C0025F	06-APR-2000
06	LA	CADDO PARISH*	22017C0050F	06-APR-2000
06	LA	CADDO PARISH*	22017C0075F	06-APR-2000
06	LA	CADDO PARISH*	22017C0100F	06-APR-2000
06	LA	CADDO PARISH*	22017C0125F	06-APR-2000
06	LA	CADDO PARISH*	22017C0150F	06-APR-2000
06	LA	CADDO PARISH*	22017C0175F	06-APR-2000
06	LA	CADDO PARISH*	22017C0190F	06-APR-2000
06	LA	CADDO PARISH*	22017C0200F	06-APR-2000
06	LA	CADDO PARISH*	22017C0214F	06-APR-2000
06	LA	CADDO PARISH*	22017C0225F	06-APR-2000
06	LA	CADDO PARISH*	22017C0250F	06-APR-2000
06	LA	CADDO PARISH*	22017C0255F	06-APR-2000
06	LA	CADDO PARISH*	22017C0270F	06-APR-2000
06	LA	CADDO PARISH*	22017C0275F	06-APR-2000
06	LA	CADDO PARISH*	22017C0276F	06-APR-2000
06	LA	CADDO PARISH*	22017C0277F	06-APR-2000
06	LA	CADDO PARISH*	22017C0300F	06-APR-2000
06	LA	CADDO PARISH*	22017C0325F	06-APR-2000
06	LA	CADDO PARISH*	22017C0335F	06-APR-2000
06	LA	CADDO PARISH*	22017C0339F	06-APR-2000
06	LA	CADDO PARISH*	22017C0341F	06-APR-2000
06	LA	CADDO PARISH*	22017C0342F	06-APR-2000
06	LA	CADDO PARISH*	22017C0343F	06-APR-2000
06	LA	CADDO PARISH*	22017C0344F	06-APR-2000

Region	State	Community	Panel	Panel date
06	LA	CADDO PARISH*	22017C0350F	06-APR-2000
06	LA	CADDO PARISH*	22017C0355F	06-APR-2000
06	LA	CADDO PARISH*	22017C0358F	06-APR-2000
06	LA	CADDO PARISH*	22017C0359F	06-APR-2000
06	LA	CADDO PARISH*	22017C0360F	06-APR-2000
06	LA	CADDO PARISH*	22017C0361F	06-APR-2000
06	LA	CADDO PARISH*	22017C0362F	06-APR-2000
06	LA	CADDO PARISH*	22017C0363F	06-APR-2000
06	LA	CADDO PARISH*	22017C0364F	06-APR-2000
06	LA	CADDO PARISH*	22017C0366F	06-APR-2000
06	LA	CADDO PARISH*	22017C0367F	06-APR-2000
06	LA	CADDO PARISH*	22017C0368F	06-APR-2000
06	LA	CADDO PARISH*	22017C0369F	06-APR-2000
06	LA	CADDO PARISH*	22017C0380F	06-APR-2000
06	LA	CADDO PARISH*	22017C0386F	06-APR-2000
06	LA	CADDO PARISH*	22017C0388F	06-APR-2000
06	LA	CADDO PARISH*	22017C0389F	06-APR-2000
06	LA	CADDO PARISH*	22017C0410F	06-APR-2000
06	LA	CADDO PARISH*	22017C0420F	06-APR-2000
06	LA	CADDO PARISH*	22017C0430F	06-APR-2000
06	LA	CADDO PARISH*	22017C0432F	06-APR-2000
06	LA	CADDO PARISH*	22017C0434F	06-APR-2000
06	LA	CADDO PARISH*	22017C0435F	06-APR-2000
06	LA	CADDO PARISH*	22017C0440F	06-APR-2000
06	LA	CADDO PARISH*	22017C0442F	06-APR-2000
06	LA	CADDO PARISH*	22017C0444F	06-APR-2000
06	LA	CADDO PARISH*	22017C0445F	06-APR-2000
06	LA	CADDO PARISH*	22017C0451F	06-APR-2000
06	LA	CADDO PARISH*	22017C0452F	06-APR-2000
06	LA	CADDO PARISH*	22017C0453F	06-APR-2000
06	LA	CADDO PARISH*	22017C0454F	06-APR-2000
06	LA	CADDO PARISH*	22017C0456F	06-APR-2000
06	LA	CADDO PARISH*	22017C0457F	06-APR-2000
06	LA	CADDO PARISH*	22017C0458F	06-APR-2000
06	LA	CADDO PARISH*	22017C0459F	06-APR-2000
06	LA	CADDO PARISH*	22017C0461F	06-APR-2000
06	LA	CADDO PARISH*	22017C0462F	06-APR-2000
06	LA	CADDO PARISH*	22017C0463F	06-APR-2000
06	LA	CADDO PARISH*	22017C0464F	06-APR-2000
06	LA	CADDO PARISH*	22017C0466F	06-APR-2000
06	LA	CADDO PARISH*	22017C0467F	06-APR-2000
06	LA	CADDO PARISH*	22017C0468F	06-APR-2000
06	LA	CADDO PARISH*	22017C0469F	06-APR-2000
06	LA	CADDO PARISH*	22017C0476F	06-APR-2000
06	LA	CADDO PARISH*	22017C0477F	06-APR-2000
06	LA	CADDO PARISH*	22017C0478F	06-APR-2000
06	LA	CADDO PARISH*	22017C0479F	06-APR-2000
06	LA	CADDO PARISH*	22017C0485F	06-APR-2000
06	LA	CADDO PARISH*	22017C0486F	06-APR-2000
06	LA	CADDO PARISH*	22017C0487F	06-APR-2000
06	LA	CADDO PARISH*	22017C0488F	06-APR-2000
06	LA	CADDO PARISH*	22017C0489F	06-APR-2000
06	LA	CADDO PARISH*	22017C0495F	06-APR-2000
06	LA	CADDO PARISH*	22017C0525F	06-APR-2000
06	LA	CADDO PARISH*	22017C0535F	06-APR-2000
06	LA	CADDO PARISH*	22017C0545F	06-APR-2000
06	LA	CADDO PARISH*	22017C0555F	06-APR-2000
06	LA	CADDO PARISH*	22017C0560F	06-APR-2000
06	LA	CADDO PARISH*	22017C0565F	06-APR-2000
06	LA	CADDO PARISH*	22017C0570F	06-APR-2000
06	LA	CADDO PARISH*	22017C0580F	06-APR-2000
06	LA	CADDO PARISH*	22017C0585F	06-APR-2000
06	LA	CADDO PARISH*	22017C0590F	06-APR-2000
06	LA	CADDO PARISH*	22017C0595F	06-APR-2000
06	LA	CADDO PARISH*	22017C0605F	06-APR-2000
06	LA	CADDO PARISH*	22017C0610F	06-APR-2000
06	LA	CADDO PARISH*	22017C0625F	06-APR-2000
06	LA	CADDO PARISH*	22017C0650F	06-APR-2000
06	LA	CADDO PARISH*	22017C0675F	06-APR-2000
06	LA	CADDO PARISH*	22017C0700F	06-APR-2000
06	LA	CADDO PARISH*	22017C0725F	06-APR-2000
06	LA	CADDO PARISH*	22017C0750F	06-APR-2000
06	LA	CADDO PARISH*	22017C0775F	06-APR-2000
06	LA	CADDO PARISH*	22017C0800F	06-APR-2000

Region	State	Community	Panel	Panel date
06	LA	CADDO PARISH*	22017CIND0 **	06-APR-2000
06	LA	CATAHOULA PARISH*	2200470175D	04-MAY-2000
06	LA	CATAHOULA PARISH*	2200470200D	04-MAY-2000
06	LA	CATAHOULA PARISH*	2200470225D	04-MAY-2000
06	LA	CATAHOULA PARISH*	2200470250D	04-MAY-2000
06	LA	CATAHOULA PARISH*	2200470275D	04-MAY-2000
06	LA	CATAHOULA PARISH*	2200470300D	04-MAY-2000
06	LA	CATAHOULA PARISH*	220047IND0 **	04-MAY-2000
06	LA	GREENWOOD, TOWN OF	22017C0410F	06-APR-2000
06	LA	GREENWOOD, TOWN OF	22017C0430F	06-APR-2000
06	LA	GREENWOOD, TOWN OF	22017C0435F	06-APR-2000
06	LA	GREENWOOD, TOWN OF	22017C0440F	06-APR-2000
06	LA	GREENWOOD, TOWN OF	22017C0445F	06-APR-2000
06	LA	GREENWOOD, TOWN OF	22017CIND0 **	06-APR-2000
06	LA	MOORINGSPORT, TOWN OF	22017C0255F	06-APR-2000
06	LA	MOORINGSPORT, TOWN OF	22017C0275F	06-APR-2000
06	LA	MOORINGSPORT, TOWN OF	22017CIND0 **	06-APR-2000
06	LA	OIL CITY, TOWN OF	22017C0190F	06-APR-2000
06	LA	OIL CITY, TOWN OF	22017C0255F	06-APR-2000
06	LA	OIL CITY, TOWN OF	22017CIND0 **	06-APR-2000
06	LA	SHREVEPORT, CITY OF	22017C0339F	06-APR-2000
06	LA	SHREVEPORT, CITY OF	22017C0341F	06-APR-2000
06	LA	SHREVEPORT, CITY OF	22017C0342F	06-APR-2000
06	LA	SHREVEPORT, CITY OF	22017C0343F	06-APR-2000
06	LA	SHREVEPORT, CITY OF	22017C0344F	06-APR-2000
06	LA	SHREVEPORT, CITY OF	22017C0358F	06-APR-2000
06	LA	SHREVEPORT, CITY OF	22017C0359F	06-APR-2000
06	LA	SHREVEPORT, CITY OF	22017C0361F	06-APR-2000
06	LA	SHREVEPORT, CITY OF	22017C0362F	06-APR-2000
06	LA	SHREVEPORT, CITY OF	22017C0363F	06-APR-2000
06	LA	SHREVEPORT, CITY OF	22017C0364F	06-APR-2000
06	LA	SHREVEPORT, CITY OF	22017C0366F	06-APR-2000
06	LA	SHREVEPORT, CITY OF	22017C0367F	06-APR-2000
06	LA	SHREVEPORT, CITY OF	22017C0368F	06-APR-2000
06	LA	SHREVEPORT, CITY OF	22017C0369F	06-APR-2000
06	LA	SHREVEPORT, CITY OF	22017C0386F	06-APR-2000
06	LA	SHREVEPORT, CITY OF	22017C0388F	06-APR-2000
06	LA	SHREVEPORT, CITY OF	22017C0389F	06-APR-2000
06	LA	SHREVEPORT, CITY OF	22017C0430F	06-APR-2000
06	LA	SHREVEPORT, CITY OF	22017C0432F	06-APR-2000
06	LA	SHREVEPORT, CITY OF	22017C0434F	06-APR-2000
06	LA	SHREVEPORT, CITY OF	22017C0435F	06-APR-2000
06	LA	SHREVEPORT, CITY OF	22017C0442F	06-APR-2000
06	LA	SHREVEPORT, CITY OF	22017C0444F	06-APR-2000
06	LA	SHREVEPORT, CITY OF	22017C0445F	06-APR-2000
06	LA	SHREVEPORT, CITY OF	22017C0451F	06-APR-2000
06	LA	SHREVEPORT, CITY OF	22017C0452F	06-APR-2000
06	LA	SHREVEPORT, CITY OF	22017C0453F	06-APR-2000
06	LA	SHREVEPORT, CITY OF	22017C0454F	06-APR-2000
06	LA	SHREVEPORT, CITY OF	22017C0456F	06-APR-2000
06	LA	SHREVEPORT, CITY OF	22017C0457F	06-APR-2000
06	LA	SHREVEPORT, CITY OF	22017C0458F	06-APR-2000
06	LA	SHREVEPORT, CITY OF	22017C0459F	06-APR-2000
06	LA	SHREVEPORT, CITY OF	22017C0461F	06-APR-2000
06	LA	SHREVEPORT, CITY OF	22017C0462F	06-APR-2000
06	LA	SHREVEPORT, CITY OF	22017C0463F	06-APR-2000
06	LA	SHREVEPORT, CITY OF	22017C0464F	06-APR-2000
06	LA	SHREVEPORT, CITY OF	22017C0466F	06-APR-2000
06	LA	SHREVEPORT, CITY OF	22017C0467F	06-APR-2000
06	LA	SHREVEPORT, CITY OF	22017C0468F	06-APR-2000
06	LA	SHREVEPORT, CITY OF	22017C0469F	06-APR-2000
06	LA	SHREVEPORT, CITY OF	22017C0476F	06-APR-2000
06	LA	SHREVEPORT, CITY OF	22017C0477F	06-APR-2000
06	LA	SHREVEPORT, CITY OF	22017C0478F	06-APR-2000
06	LA	SHREVEPORT, CITY OF	22017C0479F	06-APR-2000
06	LA	SHREVEPORT, CITY OF	22017C0485F	06-APR-2000
06	LA	SHREVEPORT, CITY OF	22017C0486F	06-APR-2000
06	LA	SHREVEPORT, CITY OF	22017C0487F	06-APR-2000
06	LA	SHREVEPORT, CITY OF	22017C0488F	06-APR-2000
06	LA	SHREVEPORT, CITY OF	22017C0489F	06-APR-2000
06	LA	SHREVEPORT, CITY OF	22017C0495F	06-APR-2000
06	LA	SHREVEPORT, CITY OF	22017C0605F	06-APR-2000
06	LA	SHREVEPORT, CITY OF	22017CIND0 **	06-APR-2000
06	NM	BOSQUE FARMS, CITY OF	3501420001B	09-FEB-2000

Region	State	Community	Panel	Panel date
06	NM	BOSQUE FARMS, CITY OF	3501420002B	09-FEB-2000
06	NM	BOSQUE FARMS, CITY OF	350142IND0 **	09-FEB-2000
06	NM	LOS LUNAS, VILLAGE OF	3501440005A	06-APR-2000
06	NM	VALENCIA COUNTY *	3500860070D	09-FEB-2000
06	NM	VALENCIA COUNTY *	3500860100D	09-FEB-2000
06	NM	VALENCIA COUNTY *	3500860185D	09-FEB-2000
06	NM	VALENCIA COUNTY *	3500860195D	09-FEB-2000
06	NM	VALENCIA COUNTY *	3500860200D	09-FEB-2000
06	NM	VALENCIA COUNTY *	3500860225D	09-FEB-2000
06	NM	VALENCIA COUNTY *	3500860300D	09-FEB-2000
06	NM	VALENCIA COUNTY *	350086IND0 **	09-FEB-2000
06	OK	CALUMET, TOWN OF	40017C0120D	19-JAN-2000
06	OK	CALUMET, TOWN OF	40017C0250D	19-JAN-2000
06	OK	CALUMET, TOWN OF	40017C0255D	19-JAN-2000
06	OK	CALUMET, TOWN OF	40017C0260D	19-JAN-2000
06	OK	CALUMET, TOWN OF	40017C0265D	19-JAN-2000
06	OK	CALUMET, TOWN OF	40017C0270D	19-JAN-2000
06	OK	CALUMET, TOWN OF	40017CIND0 **	19-JAN-2000
06	OK	CANADIAN COUNTY*	40017C0075D	19-JAN-2000
06	OK	CANADIAN COUNTY*	40017C0100D	19-JAN-2000
06	OK	CANADIAN COUNTY*	40017C0120D	19-JAN-2000
06	OK	CANADIAN COUNTY*	40017C0125D	19-JAN-2000
06	OK	CANADIAN COUNTY*	40017C0150D	19-JAN-2000
06	OK	CANADIAN COUNTY*	40017C0160D	19-JAN-2000
06	OK	CANADIAN COUNTY*	40017C0170D	19-JAN-2000
06	OK	CANADIAN COUNTY*	40017C0175D	19-JAN-2000
06	OK	CANADIAN COUNTY*	40017C0180D	19-JAN-2000
06	OK	CANADIAN COUNTY*	40017C0185D	19-JAN-2000
06	OK	CANADIAN COUNTY*	40017C0190D	19-JAN-2000
06	OK	CANADIAN COUNTY*	40017C0195D	19-JAN-2000
06	OK	CANADIAN COUNTY*	40017C0225D	19-JAN-2000
06	OK	CANADIAN COUNTY*	40017C0250D	19-JAN-2000
06	OK	CANADIAN COUNTY*	40017C0255D	19-JAN-2000
06	OK	CANADIAN COUNTY*	40017C0260D	19-JAN-2000
06	OK	CANADIAN COUNTY*	40017C0265D	19-JAN-2000
06	OK	CANADIAN COUNTY*	40017C0270D	19-JAN-2000
06	OK	CANADIAN COUNTY*	40017C0280D	19-JAN-2000
06	OK	CANADIAN COUNTY*	40017C0285D	19-JAN-2000
06	OK	CANADIAN COUNTY*	40017C0290D	19-JAN-2000
06	OK	CANADIAN COUNTY*	40017C0295D	19-JAN-2000
06	OK	CANADIAN COUNTY*	40017C0315D	19-JAN-2000
06	OK	CANADIAN COUNTY*	40017C0320D	19-JAN-2000
06	OK	CANADIAN COUNTY*	40017C0325D	19-JAN-2000
06	OK	CANADIAN COUNTY*	40017C0340D	19-JAN-2000
06	OK	CANADIAN COUNTY*	40017C0375D	19-JAN-2000
06	OK	CANADIAN COUNTY*	40017C0400D	19-JAN-2000
06	OK	CANADIAN COUNTY*	40017C0410D	19-JAN-2000
06	OK	CANADIAN COUNTY*	40017C0420D	19-JAN-2000
06	OK	CANADIAN COUNTY*	40017C0425D	19-JAN-2000
06	OK	CANADIAN COUNTY*	40017C0430D	19-JAN-2000
06	OK	CANADIAN COUNTY*	40017C0435D	19-JAN-2000
06	OK	CANADIAN COUNTY*	40017C0440D	19-JAN-2000
06	OK	CANADIAN COUNTY*	40017C0445D	19-JAN-2000
06	OK	CANADIAN COUNTY*	40017C0455D	19-JAN-2000
06	OK	CANADIAN COUNTY*	40017C0460D	19-JAN-2000
06	OK	CANADIAN COUNTY*	40017C0465D	19-JAN-2000
06	OK	CANADIAN COUNTY*	40017C0470D	19-JAN-2000
06	OK	CANADIAN COUNTY*	40017C0480D	19-JAN-2000
06	OK	CANADIAN COUNTY*	40017C0490D	19-JAN-2000
06	OK	CANADIAN COUNTY*	40017C0495D	19-JAN-2000
06	OK	CANADIAN COUNTY*	40017C0535D	19-JAN-2000
06	OK	CANADIAN COUNTY*	40017C0555D	19-JAN-2000
06	OK	CANADIAN COUNTY*	40017CIND0 **	19-JAN-2000
06	OK	EL RENO, CITY OF	40017C0120D	19-JAN-2000
06	OK	EL RENO, CITY OF	40017CIND0 **	19-JAN-2000
06	OK	FAIRLAND, TOWN OF	40017C0150D	19-JAN-2000
06	OK	FAIRLAND, TOWN OF	40017C0175D	19-JAN-2000
06	OK	FAIRLAND, TOWN OF	40017C0255D	19-JAN-2000
06	OK	FAIRLAND, TOWN OF	40017C0260D	19-JAN-2000
06	OK	FAIRLAND, TOWN OF	40017C0265D	19-JAN-2000
06	OK	FAIRLAND, TOWN OF	40017C0270D	19-JAN-2000
06	OK	FAIRLAND, TOWN OF	40017C0280D	19-JAN-2000
06	OK	FAIRLAND, TOWN OF	40017C0285D	19-JAN-2000
06	OK	FAIRLAND, TOWN OF	40017C0290D	19-JAN-2000

Region	State	Community	Panel	Panel date
06	OK	FAIRLAND, TOWN OF	40017C0295D	19-JAN-2000
06	OK	FAIRLAND, TOWN OF	40017C0315D	19-JAN-2000
06	OK	FAIRLAND, TOWN OF	40017C0325D	19-JAN-2000
06	OK	FAIRLAND, TOWN OF	40017C0410D	19-JAN-2000
06	OK	FAIRLAND, TOWN OF	40017C0430D	19-JAN-2000
06	OK	FAIRLAND, TOWN OF	40017C0435D	19-JAN-2000
06	OK	MUSTANG, CITY OF	40017C0470D	19-JAN-2000
06	OK	MUSTANG, CITY OF	40017C0490D	19-JAN-2000
06	OK	MUSTANG, CITY OF	40017C0495D	19-JAN-2000
06	OK	MUSTANG, CITY OF	40017CIND0 **	19-JAN-2000
06	OK	PIEDMONT, CITY OF	40017C0160D	19-JAN-2000
06	OK	PIEDMONT, CITY OF	40017C0170D	19-JAN-2000
06	OK	PIEDMONT, CITY OF	40017C0175D	19-JAN-2000
06	OK	PIEDMONT, CITY OF	40017C0180D	19-JAN-2000
06	OK	PIEDMONT, CITY OF	40017C0190D	19-JAN-2000
06	OK	PIEDMONT, CITY OF	40017C0195D	19-JAN-2000
06	OK	PIEDMONT, CITY OF	40017CIND0 **	19-JAN-2000
06	OK	UNION CITY, TOWN OF	40017C0410D	19-JAN-2000
06	OK	UNION CITY, TOWN OF	40017C0420D	19-JAN-2000
06	OK	UNION CITY, TOWN OF	40017C0430D	19-JAN-2000
06	OK	UNION CITY, TOWN OF	40017C0435D	19-JAN-2000
06	OK	UNION CITY, TOWN OF	40017C0440D	19-JAN-2000
06	OK	UNION CITY, TOWN OF	40017C0445D	19-JAN-2000
06	OK	UNION CITY, TOWN OF	40017C0455D	19-JAN-2000
06	OK	UNION CITY, TOWN OF	40017C0465D	19-JAN-2000
06	OK	UNION CITY, TOWN OF	40017C0535D	19-JAN-2000
06	OK	UNION CITY, TOWN OF	40017C0555D	19-JAN-2000
06	OK	UNION CITY, TOWN OF	40017CIND0 **	19-JAN-2000
06	OK	YUKON, CITY OF	40017C0315D	19-JAN-2000
06	OK	YUKON, CITY OF	40017C0320D	19-JAN-2000
06	OK	YUKON, CITY OF	40017C0340D	19-JAN-2000
06	OK	YUKON, CITY OF	40017C0460D	19-JAN-2000
06	OK	YUKON, CITY OF	40017C0480D	19-JAN-2000
06	OK	YUKON, CITY OF	40017CIND0 **	19-JAN-2000
06	TX	ARCOLA CITY OF	48157CIND0 **	20-APR-2000
06	TX	AUSTIN, CITY OF	48453C0095F	19-JAN-2000
06	TX	AUSTIN, CITY OF	48453C0100F	19-JAN-2000
06	TX	AUSTIN, CITY OF	48453C0130F	19-JAN-2000
06	TX	AUSTIN, CITY OF	48453C0135F	19-JAN-2000
06	TX	AUSTIN, CITY OF	48453C0170G	19-JAN-2000
06	TX	AUSTIN, CITY OF	48453C0175F	19-JAN-2000
06	TX	AUSTIN, CITY OF	48453C0215G	19-JAN-2000
06	TX	AUSTIN, CITY OF	48453C0260F	19-JAN-2000
06	TX	AUSTIN, CITY OF	48453C0265F	19-JAN-2000
06	TX	AUSTIN, CITY OF	48453C0305F	19-JAN-2000
06	TX	AUSTIN, CITY OF	48453CIND0 **	19-JAN-2000
06	TX	BAYTOWN, CITY OF	48201C0745K	20-APR-2000
06	TX	BAYTOWN, CITY OF	48201CIND0 **	20-APR-2000
06	TX	BEE CAVE, VILLAGE OF	48453CIND0 **	19-JAN-2000
06	TX	BELLAIRE, CITY OF	48201C0855K	20-APR-2000
06	TX	BELLAIRE, CITY OF	48201CIND0 **	20-APR-2000
06	TX	BIG OAKS M.U.D.	48157CIND0 **	20-APR-2000
06	TX	BRAZOS COUNTY *	48041C0163D	09-FEB-2000
06	TX	BRAZOS COUNTY *	48041C0201D	09-FEB-2000
06	TX	BRAZOS COUNTY *	48041C0205D	09-FEB-2000
06	TX	BRAZOS COUNTY *	48041CIND0 **	09-FEB-2000
06	TX	BRYAN, CITY OF	48041C0163D	09-FEB-2000
06	TX	BRYAN, CITY OF	48041CIND0 **	09-FEB-2000
06	TX	BUNKER HILL VILLAGE, CITY OF	48201CIND0 **	20-APR-2000
06	TX	CEDAR PARK, CITY OF	48453CIND0 **	19-JAN-2000
06	TX	CHELFORD M.U.D., CITY	48157CIND0 **	20-APR-2000
06	TX	CHELFORD M.U.D., CITY	48201C0810K	20-APR-2000
06	TX	CHELFORD M.U.D., CITY	48201CIND0 **	20-APR-2000
06	TX	COLLEGE STATION, CITY OF	48041C0163D	09-FEB-2000
06	TX	COLLEGE STATION, CITY OF	48041C0201D	09-FEB-2000
06	TX	COLLEGE STATION, CITY OF	48041C0205D	09-FEB-2000
06	TX	COLLEGE STATION, CITY OF	48041CIND0 **	09-FEB-2000
06	TX	DEER PARK, CITY OF	48201CIND0 **	20-APR-2000
06	TX	EDINBURG, CITY OF	4803380005E	06-JUN-2000
06	TX	EDINBURG, CITY OF	4803380010E	06-JUN-2000
06	TX	EDINBURG, CITY OF	4803380015E	06-JUN-2000
06	TX	EDINBURG, CITY OF	4803380020E	06-JUN-2000
06	TX	EDINBURG, CITY OF	4803380030E	06-JUN-2000
06	TX	EDINBURG, CITY OF	4803380035E	06-JUN-2000

Region	State	Community	Panel	Panel date
06	TX	EDINBURG, CITY OF	480338IND0 **	06-JUN-2000
06	TX	EL LAGO, CITY OF	48201CIND0 **	20-APR-2000
06	TX	FAIRCHILDS, VILLAGE OF	48157CIND0 **	20-APR-2000
06	TX	FIRST COLONY L.I.D.	48157CIND0 **	20-APR-2000
06	TX	FORT BEND COUNTY *	48157C0140K	20-APR-2000
06	TX	FORT BEND COUNTY *	48157C0280K	20-APR-2000
06	TX	FORT BEND COUNTY *	48157C0283K	20-APR-2000
06	TX	FORT BEND COUNTY *	48157CIND0 **	20-APR-2000
06	TX	FORT BEND COUNTY L.I.D. #2	48157C0140K	20-APR-2000
06	TX	FORT BEND COUNTY L.I.D. #2	48157C0280K	20-APR-2000
06	TX	FORT BEND COUNTY L.I.D. #2	48157C0283K	20-APR-2000
06	TX	FORT BEND COUNTY L.I.D. #2	48157CIND0 **	20-APR-2000
06	TX	FORT BEND COUNTY L.I.D. #7	48157C0140K	20-APR-2000
06	TX	FORT BEND COUNTY L.I.D. #7	48157C0280K	20-APR-2000
06	TX	FORT BEND COUNTY L.I.D. #7	48157C0283K	20-APR-2000
06	TX	FORT BEND COUNTY L.I.D. #7	48157CIND0 **	20-APR-2000
06	TX	FORT BEND COUNTY M.U.D. #2	48157C0140K	20-APR-2000
06	TX	FORT BEND COUNTY M.U.D. #2	48157C0280K	20-APR-2000
06	TX	FORT BEND COUNTY M.U.D. #2	48157C0283K	20-APR-2000
06	TX	FORT BEND COUNTY M.U.D. #2	48157CIND0 **	20-APR-2000
06	TX	FORT BEND COUNTY M.U.D. #2	48201C0840K	20-APR-2000
06	TX	FORT BEND COUNTY M.U.D. #2	48201CIND0 **	20-APR-2000
06	TX	FORT BEND COUNTY M.U.D. #23	48157C0140K	20-APR-2000
06	TX	FORT BEND COUNTY M.U.D. #23	48157C0280K	20-APR-2000
06	TX	FORT BEND COUNTY M.U.D. #23	48157C0283K	20-APR-2000
06	TX	FORT BEND COUNTY M.U.D. #23	48157CIND0 **	20-APR-2000
06	TX	FORT BEND COUNTY M.U.D. #25	48157C0140K	20-APR-2000
06	TX	FORT BEND COUNTY M.U.D. #25	48157C0280K	20-APR-2000
06	TX	FORT BEND COUNTY M.U.D. #25	48157C0283K	20-APR-2000
06	TX	FORT BEND COUNTY M.U.D. #25	48157CIND0 **	20-APR-2000
06	TX	FORT BEND COUNTY M.U.D. #30	48157C0140K	20-APR-2000
06	TX	FORT BEND COUNTY M.U.D. #30	48157C0280K	20-APR-2000
06	TX	FORT BEND COUNTY M.U.D. #30	48157C0283K	20-APR-2000
06	TX	FORT BEND COUNTY M.U.D. #30	48157CIND0 **	20-APR-2000
06	TX	FORT BEND COUNTY M.U.D. #34	48157C0140K	20-APR-2000
06	TX	FORT BEND COUNTY M.U.D. #34	48157C0280K	20-APR-2000
06	TX	FORT BEND COUNTY M.U.D. #34	48157C0283K	20-APR-2000
06	TX	FORT BEND COUNTY M.U.D. #34	48157CIND0 **	20-APR-2000
06	TX	FORT BEND COUNTY M.U.D. #35	48157C0140K	20-APR-2000
06	TX	FORT BEND COUNTY M.U.D. #35	48157C0280K	20-APR-2000
06	TX	FORT BEND COUNTY M.U.D. #35	48157C0283K	20-APR-2000
06	TX	FORT BEND COUNTY M.U.D. #35	48157CIND0 **	20-APR-2000
06	TX	FORT BEND COUNTY M.U.D. #41	48157C0140K	20-APR-2000
06	TX	FORT BEND COUNTY M.U.D. #41	48157C0280K	20-APR-2000
06	TX	FORT BEND COUNTY M.U.D. #41	48157C0283K	20-APR-2000
06	TX	FORT BEND COUNTY M.U.D. #41	48157CIND0 **	20-APR-2000
06	TX	FORT BEND COUNTY M.U.D. #42	48157C0140K	20-APR-2000
06	TX	FORT BEND COUNTY M.U.D. #42	48157C0280K	20-APR-2000
06	TX	FORT BEND COUNTY M.U.D. #42	48157C0283K	20-APR-2000
06	TX	FORT BEND COUNTY M.U.D. #42	48157CIND0 **	20-APR-2000
06	TX	FORT BEND COUNTY M.U.D. #81	48157C0140K	20-APR-2000
06	TX	FORT BEND COUNTY M.U.D. #81	48157C0280K	20-APR-2000
06	TX	FORT BEND COUNTY M.U.D. #81	48157C0283K	20-APR-2000
06	TX	FORT BEND COUNTY M.U.D. #81	48157CIND0 **	20-APR-2000
06	TX	FRISCO, CITY OF	48157C0140K	20-APR-2000
06	TX	FULSHEAR, CITY OF	48157CIND0 **	20-APR-2000
06	TX	GALENA PARK, CITY OF	48201C0885K	20-APR-2000
06	TX	GALENA PARK, CITY OF	48201CIND0 **	20-APR-2000
06	TX	GARFIELD, VILLAGE OF	48453CIND0 **	19-JAN-2000
06	TX	HARRIS COUNTY*	48201C0235K	20-APR-2000
06	TX	HARRIS COUNTY*	48201C0245K	20-APR-2000
06	TX	HARRIS COUNTY*	48201C0305K	20-APR-2000
06	TX	HARRIS COUNTY*	48201C0315K	20-APR-2000
06	TX	HARRIS COUNTY*	48201C0320K	20-APR-2000
06	TX	HARRIS COUNTY*	48201C0420K	20-APR-2000
06	TX	HARRIS COUNTY*	48201C0430K	20-APR-2000
06	TX	HARRIS COUNTY*	48201C0440K	20-APR-2000
06	TX	HARRIS COUNTY*	48201C0445K	20-APR-2000
06	TX	HARRIS COUNTY*	48201C0465K	20-APR-2000
06	TX	HARRIS COUNTY*	48201C0635K	20-APR-2000
06	TX	HARRIS COUNTY*	48201C0655K	20-APR-2000
06	TX	HARRIS COUNTY*	48201C0660K	20-APR-2000
06	TX	HARRIS COUNTY*	48201C0665K	20-APR-2000
06	TX	HARRIS COUNTY*	48201C0670K	20-APR-2000

Region	State	Community	Panel	Panel date
06	TX	HARRIS COUNTY*	48201C0680K	20-APR-2000
06	TX	HARRIS COUNTY*	48201C0690K	20-APR-2000
06	TX	HARRIS COUNTY*	48201C0735K	20-APR-2000
06	TX	HARRIS COUNTY*	48201C0745K	20-APR-2000
06	TX	HARRIS COUNTY*	48201C0810K	20-APR-2000
06	TX	HARRIS COUNTY*	48201C0830K	20-APR-2000
06	TX	HARRIS COUNTY*	48201C0835K	20-APR-2000
06	TX	HARRIS COUNTY*	48201C0840K	20-APR-2000
06	TX	HARRIS COUNTY*	48201C0845K	20-APR-2000
06	TX	HARRIS COUNTY*	48201C0855K	20-APR-2000
06	TX	HARRIS COUNTY*	48201C0860K	20-APR-2000
06	TX	HARRIS COUNTY*	48201C0865K	20-APR-2000
06	TX	HARRIS COUNTY*	48201C0870K	20-APR-2000
06	TX	HARRIS COUNTY*	48201C0880K	20-APR-2000
06	TX	HARRIS COUNTY*	48201C0885K	20-APR-2000
06	TX	HARRIS COUNTY*	48201C1005K	20-APR-2000
06	TX	HARRIS COUNTY*	48201C1010K	20-APR-2000
06	TX	HARRIS COUNTY*	48201C1030K	20-APR-2000
06	TX	HARRIS COUNTY*	48201C1035K	20-APR-2000
06	TX	HARRIS COUNTY*	48201C1045K	20-APR-2000
06	TX	HARRIS COUNTY*	48201C1055K	20-APR-2000
06	TX	HARRIS COUNTY*	48201C1060K	20-APR-2000
06	TX	HARRIS COUNTY*	48201C1065K	20-APR-2000
06	TX	HARRIS COUNTY*	48201C1070K	20-APR-2000
06	TX	HARRIS COUNTY*	48201C1090K	20-APR-2000
06	TX	HARRIS COUNTY*	48201CIND0 **	20-APR-2000
06	TX	HEDWIG VILLAGE, CITY OF	48201CIND0 **	20-APR-2000
06	TX	HIDALGO COUNTY *	4803340290D	06-JUN-2000
06	TX	HIDALGO COUNTY *	4803340295D	06-JUN-2000
06	TX	HIDALGO COUNTY *	4803340300D	06-JUN-2000
06	TX	HIDALGO COUNTY *	4803340325D	06-JUN-2000
06	TX	HIDALGO COUNTY *	4803340350C	06-JUN-2000
06	TX	HIDALGO COUNTY *	4803340450C	06-JUN-2000
06	TX	HIDALGO COUNTY *	480334IND0 **	06-JUN-2000
06	TX	HILSHIRE VILLAGE, CITY OF	48201C0665K	20-APR-2000
06	TX	HILSHIRE VILLAGE, CITY OF	48201CIND0 **	20-APR-2000
06	TX	HOUSTON, CITY OF	48201C0235K	20-APR-2000
06	TX	HOUSTON, CITY OF	48201C0315K	20-APR-2000
06	TX	HOUSTON, CITY OF	48201C0320K	20-APR-2000
06	TX	HOUSTON, CITY OF	48201C0420K	20-APR-2000
06	TX	HOUSTON, CITY OF	48201C0430K	20-APR-2000
06	TX	HOUSTON, CITY OF	48201C0440K	20-APR-2000
06	TX	HOUSTON, CITY OF	48201C0445K	20-APR-2000
06	TX	HOUSTON, CITY OF	48201C0465K	20-APR-2000
06	TX	HOUSTON, CITY OF	48201C0635K	20-APR-2000
06	TX	HOUSTON, CITY OF	48201C0655K	20-APR-2000
06	TX	HOUSTON, CITY OF	48201C0660K	20-APR-2000
06	TX	HOUSTON, CITY OF	48201C0665K	20-APR-2000
06	TX	HOUSTON, CITY OF	48201C0670K	20-APR-2000
06	TX	HOUSTON, CITY OF	48201C0680K	20-APR-2000
06	TX	HOUSTON, CITY OF	48201C0690K	20-APR-2000
06	TX	HOUSTON, CITY OF	48201C0745K	20-APR-2000
06	TX	HOUSTON, CITY OF	48201C0810K	20-APR-2000
06	TX	HOUSTON, CITY OF	48201C0830K	20-APR-2000
06	TX	HOUSTON, CITY OF	48201C0835K	20-APR-2000
06	TX	HOUSTON, CITY OF	48201C0840K	20-APR-2000
06	TX	HOUSTON, CITY OF	48201C0845K	20-APR-2000
06	TX	HOUSTON, CITY OF	48201C0855K	20-APR-2000
06	TX	HOUSTON, CITY OF	48201C0860K	20-APR-2000
06	TX	HOUSTON, CITY OF	48201C0865K	20-APR-2000
06	TX	HOUSTON, CITY OF	48201C0870K	20-APR-2000
06	TX	HOUSTON, CITY OF	48201C0880K	20-APR-2000
06	TX	HOUSTON, CITY OF	48201C0885K	20-APR-2000
06	TX	HOUSTON, CITY OF	48201C1005K	20-APR-2000
06	TX	HOUSTON, CITY OF	48201C1010K	20-APR-2000
06	TX	HOUSTON, CITY OF	48201C1030K	20-APR-2000
06	TX	HOUSTON, CITY OF	48201C1035K	20-APR-2000
06	TX	HOUSTON, CITY OF	48201C1055K	20-APR-2000
06	TX	HOUSTON, CITY OF	48201C1060K	20-APR-2000
06	TX	HOUSTON, CITY OF	48201C1070K	20-APR-2000
06	TX	HOUSTON, CITY OF	48201C1090K	20-APR-2000
06	TX	HOUSTON, CITY OF	48201CIND0 **	20-APR-2000
06	TX	HUMBLE, CITY OF	48201C0315K	20-APR-2000
06	TX	HUMBLE, CITY OF	48201CIND0 **	20-APR-2000

Region	State	Community	Panel	Panel date
06	TX	HUNTER'S CREEK VILLAGE, CITY OF	48201C0665K	20-APR-2000
06	TX	HUNTER'S CREEK VILLAGE, CITY OF	48201CIND0 **	20-APR-2000
06	TX	JACINTO CITY, CITY OF	48201CIND0 **	20-APR-2000
06	TX	JERSEY VILLAGE, CITY OF	48201C0440K	20-APR-2000
06	TX	JERSEY VILLAGE, CITY OF	48201C0445K	20-APR-2000
06	TX	JERSEY VILLAGE, CITY OF	48201C0635K	20-APR-2000
06	TX	JERSEY VILLAGE, CITY OF	48201CIND0 **	20-APR-2000
06	TX	JONESTOWN, CITY OF	48453CIND0 **	19-JAN-2000
06	TX	KENDLETON, TOWN OF	48157CIND0 **	20-APR-2000
06	TX	KILLEEN, CITY OF	4800310005C**	04-MAY-2000
06	TX	KILLEEN, CITY OF	4800310007C**	04-MAY-2000
06	TX	KILLEEN, CITY OF	4800310008C**	04-MAY-2000
06	TX	KILLEEN, CITY OF	480031IND0 **	04-MAY-2000
06	TX	KINGSBRIDGE M.U.D.	48157CIND0 **	20-APR-2000
06	TX	KINGSBRIDGE M.U.D.	48201CIND0 **	20-APR-2000
06	TX	LA PORTE, CITY OF	48201CIND0 **	20-APR-2000
06	TX	LAGO VISTA, CITY OF	48453CIND0 **	19-JAN-2000
06	TX	LAKEWAY, CITY OF	48453CIND0 **	19-JAN-2000
06	TX	LEANDER, CITY OF	48453CIND0 **	19-JAN-2000
06	TX	MANOR, CITY OF	48453CIND0 **	19-JAN-2000
06	TX	MEADOWS PLACE, CITY OF	48157CIND0 **	20-APR-2000
06	TX	MISSION BEND M.U.D. #1	48201C0810K	20-APR-2000
06	TX	MISSION BEND M.U.D. #1	48201CIND0 **	20-APR-2000
06	TX	MISSION BEND M.U.D. #2	48201C0810K	20-APR-2000
06	TX	MISSION BEND M.U.D. #2	48201CIND0 **	20-APR-2000
06	TX	MISSOURI CITY, CITY OF	48157CIND0 **	20-APR-2000
06	TX	MISSOURI CITY, CITY OF	48201C0845K	20-APR-2000
06	TX	MISSOURI CITY, CITY OF	48201CIND0 **	20-APR-2000
06	TX	MORGANS POINT, CITY OF	48201CIND0 **	20-APR-2000
06	TX	NASSAU BAY, CITY OF	48201C1090K	20-APR-2000
06	TX	NASSAU BAY, CITY OF	48201CIND0 **	20-APR-2000
06	TX	NEEDVILLE, CITY OF	48157CIND0 **	20-APR-2000
06	TX	PASADENA, CITY OF	48201C1090K	20-APR-2000
06	TX	PASADENA, CITY OF	48201CIND0 **	20-APR-2000
06	TX	PEARLAND, CITY OF	48201C1045K	20-APR-2000
06	TX	PEARLAND, CITY OF	48201C1055K	20-APR-2000
06	TX	PEARLAND, CITY OF	48201C1065K	20-APR-2000
06	TX	PEARLAND, CITY OF	48201CIND0 **	20-APR-2000
06	TX	PECAN GROVE M.U.D.	48157CIND0 **	20-APR-2000
06	TX	PFLUGERVILLE, CITY OF	48453CIND0 **	19-JAN-2000
06	TX	PINEY POINT VILLAGE, CITY OF	48201C0835K	20-APR-2000
06	TX	PINEY POINT VILLAGE, CITY OF	48201CIND0 **	20-APR-2000
06	TX	PLEAK, VILLAGE OF	48157CIND0 **	20-APR-2000
06	TX	RICHMOND, CITY OF	48157CIND0 **	20-APR-2000
06	TX	ROLLINGWOOD, CITY OF	48453CIND0 **	19-JAN-2000
06	TX	ROSENBERG, CITY OF	48157CIND0 **	20-APR-2000
06	TX	ROUND ROCK, CITY OF	48453CIND0 **	19-JAN-2000
06	TX	SAN LEANNA, CITY OF	48453C0260F	19-JAN-2000
06	TX	SAN LEANNA, CITY OF	48453CIND0 **	19-JAN-2000
06	TX	SEABROOK, CITY OF	48201CIND0 **	20-APR-2000
06	TX	SEGUIN, CITY OF	4855080005D	07-MAR-2000
06	TX	SEGUIN, CITY OF	4855080010D	07-MAR-2000
06	TX	SEGUIN, CITY OF	485508IND0 **	07-MAR-2000
06	TX	SEGUIN, CITY OF	485508V000	07-MAR-2000
06	TX	SHOREACRES, CITY OF	48201CIND0 **	20-APR-2000
06	TX	SIMONTON, VILLAGE OF	48157CIND0 **	20-APR-2000
06	TX	SOUTH HOUSTON,CITY OF	48201CIND0 **	20-APR-2000
06	TX	SOUTHSIDE PLACE, CITY OF	48201C0855K	20-APR-2000
06	TX	SOUTHSIDE PLACE, CITY OF	48201C0860K	20-APR-2000
06	TX	SOUTHSIDE PLACE, CITY OF	48201CIND0 **	20-APR-2000
06	TX	SPRING VALLEY, CITY OF	48201C0665K	20-APR-2000
06	TX	SPRING VALLEY, CITY OF	48201CIND0 **	20-APR-2000
06	TX	STAFFORD, CITY OF	48157C0140K	20-APR-2000
06	TX	STAFFORD, CITY OF	48157CIND0 **	20-APR-2000
06	TX	STAFFORD, CITY OF	48201C0845K	20-APR-2000
06	TX	STAFFORD, CITY OF	48201CIND0 **	20-APR-2000
06	TX	SUGAR LAND, CITY OF	48157C0140K	20-APR-2000
06	TX	SUGAR LAND, CITY OF	48157CIND0 **	20-APR-2000
06	TX	SUNSET VALLEY, CITY OF	48453CIND0 **	19-JAN-2000
06	TX	TAYLOR LAKE VILLAGE, CITY OF	48201CIND0 **	20-APR-2000
06	TX	THOMPSONS, TOWN OF	48157CIND0 **	20-APR-2000
06	TX	TOMBALL, CITY OF	48201CIND0 **	20-APR-2000
06	TX	TRAVIS COUNTY*	48453C0095F	19-JAN-2000
06	TX	TRAVIS COUNTY*	48453C0100F	19-JAN-2000

Region	State	Community	Panel	Panel date
06	TX	TRAVIS COUNTY*	48453C0130F	19-JAN-2000
06	TX	TRAVIS COUNTY*	48453C0135F	19-JAN-2000
06	TX	TRAVIS COUNTY*	48453C0170G	19-JAN-2000
06	TX	TRAVIS COUNTY*	48453C0175F	19-JAN-2000
06	TX	TRAVIS COUNTY*	48453C0215G	19-JAN-2000
06	TX	TRAVIS COUNTY*	48453C0260F	19-JAN-2000
06	TX	TRAVIS COUNTY*	48453C0265F	19-JAN-2000
06	TX	TRAVIS COUNTY*	48453C0305F	19-JAN-2000
06	TX	TRAVIS COUNTY*	48453C0340F	19-JAN-2000
06	TX	TRAVIS COUNTY*	48453CIND0 **	19-JAN-2000
06	TX	WEBSTER, CITY OF	48201C1070K	20-APR-2000
06	TX	WEBSTER, CITY OF	48201C1090K	20-APR-2000
06	TX	WEBSTER, CITY OF	48201CIND0 **	20-APR-2000
06	TX	WEST KEEGANS BAYOU IMPROVEMENT DISTRICT.	48157CIND0 **	20-APR-2000
06	TX	WEST LAKE HILLS, CITY OF	48453CIND0 **	19-JAN-2000
06	TX	WEST UNIVERSITY PLACE, CITY OF	48201C0855K	20-APR-2000
06	TX	WEST UNIVERSITY PLACE, CITY OF	48201C0860K	20-APR-2000
06	TX	WEST UNIVERSITY PLACE, CITY OF	48201CIND0 **	20-APR-2000
06	TX	WICHITA FALLS, CITY OF	4806620025E	19-JAN-2000
06	TX	WICHITA FALLS, CITY OF	4806620030F	19-JAN-2000
06	TX	WICHITA FALLS, CITY OF	480662IND0 **	19-JAN-2000
06	TX	WILLOW FORK DRAINAGE DISTRICT	48157CIND0 **	20-APR-2000
06	TX	WILLOW FORK DRAINAGE DISTRICT	48201CIND0 **	20-APR-2000
06	TX	WIXON VALLEY, CITY OF	48041CIND0 **	09-FEB-2000
07	IA	ADEL, CITY OF	19049C0118D	19-JAN-2000
07	IA	ADEL, CITY OF	19049C0181D	19-JAN-2000
07	IA	ADEL, CITY OF	19049CIND0 **	19-JAN-2000
07	IA	DALLAS CENTER, TOWN OF	19049C0120D	19-JAN-2000
07	IA	DALLAS CENTER, TOWN OF	19049C0125D	19-JAN-2000
07	IA	DALLAS CENTER, TOWN OF	19049CIND0 **	19-JAN-2000
07	IA	DALLAS COUNTY *	19049C0010D**	19-JAN-2000
07	IA	DALLAS COUNTY *	19049C0025D**	19-JAN-2000
07	IA	DALLAS COUNTY *	19049C0030D**	19-JAN-2000
07	IA	DALLAS COUNTY *	19049C0050D**	19-JAN-2000
07	IA	DALLAS COUNTY *	19049C0069D**	19-JAN-2000
07	IA	DALLAS COUNTY *	19049C0075D**	19-JAN-2000
07	IA	DALLAS COUNTY *	19049C0100D**	19-JAN-2000
07	IA	DALLAS COUNTY *	19049C0118D**	19-JAN-2000
07	IA	DALLAS COUNTY *	19049C0120D**	19-JAN-2000
07	IA	DALLAS COUNTY *	19049C0125D**	19-JAN-2000
07	IA	DALLAS COUNTY *	19049C0130D**	19-JAN-2000
07	IA	DALLAS COUNTY *	19049C0140D**	19-JAN-2000
07	IA	DALLAS COUNTY *	19049C0160D**	19-JAN-2000
07	IA	DALLAS COUNTY *	19049C0175D**	19-JAN-2000
07	IA	DALLAS COUNTY *	19049C0181D**	19-JAN-2000
07	IA	DALLAS COUNTY *	19049C0185D**	19-JAN-2000
07	IA	DALLAS COUNTY *	19049C0191D**	19-JAN-2000
07	IA	DALLAS COUNTY *	19049C0192D**	19-JAN-2000
07	IA	DALLAS COUNTY *	19049C0195D**	19-JAN-2000
07	IA	DALLAS COUNTY *	19049C0200D**	19-JAN-2000
07	IA	DALLAS COUNTY *	19049C0215D**	19-JAN-2000
07	IA	DALLAS COUNTY *	19049C0220D**	19-JAN-2000
07	IA	DALLAS COUNTY *	19049C0225D**	19-JAN-2000
07	IA	DALLAS COUNTY *	19049CIND0 **	19-JAN-2000
07	IA	DAWSON, CITY OF	19049C0010D	19-JAN-2000
07	IA	DAWSON, CITY OF	19049CIND0 **	19-JAN-2000
07	IA	DESOTO, CITY OF	19049C0191D	19-JAN-2000
07	IA	DESOTO, CITY OF	19049CIND0 **	19-JAN-2000
07	IA	DICKINSON COUNTY *	1908640025C	20-APR-2000
07	IA	DICKINSON COUNTY *	1908640050C	20-APR-2000
07	IA	DICKINSON COUNTY *	1908640075C	20-APR-2000
07	IA	DICKINSON COUNTY *	1908640100C	20-APR-2000
07	IA	DICKINSON COUNTY *	190864IND0 **	20-APR-2000
07	IA	GRANGER, CITY OF	19049C0069D	19-JAN-2000
07	IA	GRANGER, CITY OF	19049C0075D	19-JAN-2000
07	IA	GRANGER, CITY OF	19049C0130D	19-JAN-2000
07	IA	GRANGER, CITY OF	19049CIND0 **	19-JAN-2000
07	IA	MITCHELL COUNTY *	1908920001B***	01-MAR-2000
07	IA	MITCHELL COUNTY *	1908920002B***	01-MAR-2000
07	IA	MITCHELL COUNTY *	1908920003B***	01-MAR-2000
07	IA	MITCHELL COUNTY *	1908920004B***	01-MAR-2000
07	IA	MITCHELL COUNTY *	1908920005B***	01-MAR-2000
07	IA	MITCHELL COUNTY *	1908920006B***	01-MAR-2000

Region	State	Community	Panel	Panel date
07	IA	MITCHELL COUNTY *	1908929999B***	01-MAR-2000
07	IA	MITCHELL COUNTY *	190892IND0 ***	01-MAR-2000
07	IA	PERRY, CITY OF	19049C0030D	19-JAN-2000
07	IA	PERRY, CITY OF	19049CIND0 **	19-JAN-2000
07	IA	REDFIELD, CITY OF	19049C0160D	19-JAN-2000
07	IA	REDFIELD, CITY OF	19049CIND0 **	19-JAN-2000
07	IA	RICEVILLE, CITY OF	190418 A***	01-MAR-2000
07	IA	RICEVILLE, CITY OF	1904189999A***	01-MAR-2000
07	IA	VAN METER, CITY OF	19049C0192D	19-JAN-2000
07	IA	VAN METER, CITY OF	19049CIND0 **	19-JAN-2000
07	IA	WAUKEE, CITY OF	19049C0140D	19-JAN-2000
07	IA	WAUKEE, CITY OF	19049C0225D	19-JAN-2000
07	IA	WAUKEE, CITY OF	19049CIND0 **	19-JAN-2000
07	KS	LEAVENWORTH COUNTY *	2001860125D	20-JUN-2000
07	KS	LEAVENWORTH COUNTY *	200186IND0 **	20-JUN-2000
07	KS	TONGANOXIE, CITY OF	2001920001C	20-JUN-2000
07	MO	BULL CREEK, VILLAGE OF	2909160001B	19-JAN-2000
07	MO	CLARK COUNTY *	2907920025C	19-JAN-2000
07	MO	CLARK COUNTY *	2907920050C	19-JAN-2000
07	MO	CLARK COUNTY *	2907920075C	19-JAN-2000
07	MO	CLARK COUNTY *	2907920100C	19-JAN-2000
07	MO	CLARK COUNTY *	2907920125C	19-JAN-2000
07	MO	CLARK COUNTY *	2907920150C	19-JAN-2000
07	MO	CLARK COUNTY *	2907920175C	19-JAN-2000
07	MO	CLARK COUNTY *	290792IND0 **	19-JAN-2000
07	MO	HOLLISTER, CITY OF	2904370001C	19-JAN-2000
07	MO	INDEPENDENCE, CITY OF	2901720005E	21-MAR-2000
07	MO	INDEPENDENCE, CITY OF	2901720010E	21-MAR-2000
07	MO	INDEPENDENCE, CITY OF	2901720015E	21-MAR-2000
07	MO	INDEPENDENCE, CITY OF	2901720020E	21-MAR-2000
07	MO	INDEPENDENCE, CITY OF	2901720025E	21-MAR-2000
07	MO	INDEPENDENCE, CITY OF	2901720035E	21-MAR-2000
07	MO	INDEPENDENCE, CITY OF	2901720040E	21-MAR-2000
07	MO	INDEPENDENCE, CITY OF	290172IND0 **	21-MAR-2000
07	MO	MCDONALD COUNTY *	2908170025B***	01-MAR-2000
07	MO	MCDONALD COUNTY *	2908170050B***	01-MAR-2000
07	MO	MCDONALD COUNTY *	2908170075B***	01-MAR-2000
07	MO	MCDONALD COUNTY *	2908170100B***	01-MAR-2000
07	MO	MCDONALD COUNTY *	2908170125B***	01-MAR-2000
07	MO	MCDONALD COUNTY *	2908170150B***	01-MAR-2000
07	MO	MCDONALD COUNTY *	2908179999B***	01-MAR-2000
07	MO	MCDONALD COUNTY *	290817IND0 ***	01-MAR-2000
07	MO	ROCKAWAY BEACH, TOWN OF	290438 A***	01-MAR-2000
07	MO	ROCKAWAY BEACH, TOWN OF	2904389999A***	01-MAR-2000
07	NE	LINDSAY, VILLAGE OF	3101770005C	09-FEB-2000
07	NE	PLATTE COUNTY *	3104670010C	09-FEB-2000
07	NE	PLATTE COUNTY *	3104670020C	09-FEB-2000
07	NE	PLATTE COUNTY *	3104670025C	09-FEB-2000
07	NE	PLATTE COUNTY *	3104670040C	09-FEB-2000
07	NE	PLATTE COUNTY *	3104670050C	09-FEB-2000
07	NE	PLATTE COUNTY *	3104670075C	09-FEB-2000
07	NE	PLATTE COUNTY *	3104670100C	09-FEB-2000
07	NE	PLATTE COUNTY *	3104670105D	09-FEB-2000
07	NE	PLATTE COUNTY *	3104670115D	09-FEB-2000
07	NE	PLATTE COUNTY *	3104670120D	09-FEB-2000
07	NE	PLATTE COUNTY *	3104670125D	09-FEB-2000
07	NE	PLATTE COUNTY *	3104670140C	09-FEB-2000
07	NE	PLATTE COUNTY *	3104670145C	09-FEB-2000
07	NE	PLATTE COUNTY *	3104670150C	09-FEB-2000
07	NE	PLATTE COUNTY *	3104670175C	09-FEB-2000
07	NE	PLATTE COUNTY *	3104670200D	09-FEB-2000
07	NE	PLATTE COUNTY *	3104670225D	09-FEB-2000
07	NE	PLATTE COUNTY *	3104670250C	09-FEB-2000
07	NE	PLATTE COUNTY *	310467IND0 **	09-FEB-2000
08	MT	YELLOWSTONE COUNTY *	3001421010B	21-MAR-2000
08	MT	YELLOWSTONE COUNTY *	3001421030B	21-MAR-2000
08	MT	YELLOWSTONE COUNTY *	300142IND0 **	21-MAR-2000
08	ND	JAMESTOWN CITY OF	3853660004D	21-MAR-2000
08	ND	JAMESTOWN CITY OF	3853660012D	21-MAR-2000
08	ND	JAMESTOWN CITY OF	3853660016D	21-MAR-2000
08	ND	JAMESTOWN CITY OF	3853660018D	21-MAR-2000
08	ND	JAMESTOWN CITY OF	385366IND0 **	21-MAR-2000
08	ND	MCHENRY COUNTY*	38049C0070D	19-JAN-2000
08	ND	MCHENRY COUNTY*	38049C0090D	19-JAN-2000

Region	State	Community	Panel	Panel date
08	ND	MCHENRY COUNTY*	38049C0095D	19-JAN-2000
08	ND	MCHENRY COUNTY*	38049C0210D	19-JAN-2000
08	ND	MCHENRY COUNTY*	38049C0225D	19-JAN-2000
08	ND	MCHENRY COUNTY*	38049C0230D	19-JAN-2000
08	ND	MCHENRY COUNTY*	38049C0235D	19-JAN-2000
08	ND	MCHENRY COUNTY*	38049C0240D	19-JAN-2000
08	ND	MCHENRY COUNTY*	38049C0245D	19-JAN-2000
08	ND	MCHENRY COUNTY*	38049C0255D	19-JAN-2000
08	ND	MCHENRY COUNTY*	38049C0260D	19-JAN-2000
08	ND	MCHENRY COUNTY*	38049C0265D	19-JAN-2000
08	ND	MCHENRY COUNTY*	38049C0270D	19-JAN-2000
08	ND	MCHENRY COUNTY*	38049C0280D	19-JAN-2000
08	ND	MCHENRY COUNTY*	38049C0285D	19-JAN-2000
08	ND	MCHENRY COUNTY*	38049C0290D	19-JAN-2000
08	ND	MCHENRY COUNTY*	38049C0295D	19-JAN-2000
08	ND	MCHENRY COUNTY*	38049C0455D	19-JAN-2000
08	ND	MCHENRY COUNTY*	38049C0460D	19-JAN-2000
08	ND	MCHENRY COUNTY*	38049C0465D	19-JAN-2000
08	ND	MCHENRY COUNTY*	38049C0470D	19-JAN-2000
08	ND	MCHENRY COUNTY*	38049C0620D	19-JAN-2000
08	ND	MCHENRY COUNTY*	38049C0630D	19-JAN-2000
08	ND	MCHENRY COUNTY*	38049C0635D	19-JAN-2000
08	ND	MCHENRY COUNTY*	38049C0640D	19-JAN-2000
08	ND	MCHENRY COUNTY*	38049C0645D	19-JAN-2000
08	ND	MCHENRY COUNTY*	38049C0770D	19-JAN-2000
08	ND	MCHENRY COUNTY*	38049C0785D	19-JAN-2000
08	ND	MCHENRY COUNTY*	38049C0790D	19-JAN-2000
08	ND	MCHENRY COUNTY*	38049C0795D	19-JAN-2000
08	ND	MCHENRY COUNTY*	38049C0805D	19-JAN-2000
08	ND	MCHENRY COUNTY*	38049C0810D	19-JAN-2000
08	ND	MCHENRY COUNTY*	38049C0815D	19-JAN-2000
08	ND	MCHENRY COUNTY*	38049C0820D	19-JAN-2000
08	ND	MCHENRY COUNTY*	38049C0910D	19-JAN-2000
08	ND	MCHENRY COUNTY*	38049C0929D	19-JAN-2000
08	ND	MCHENRY COUNTY*	38049C0930D	19-JAN-2000
08	ND	MCHENRY COUNTY*	38049C0933D	19-JAN-2000
08	ND	MCHENRY COUNTY*	38049C0935D	19-JAN-2000
08	ND	MCHENRY COUNTY*	38049C0937D	19-JAN-2000
08	ND	MCHENRY COUNTY*	38049C0940D	19-JAN-2000
08	ND	MCHENRY COUNTY*	38049C0941D	19-JAN-2000
08	ND	MCHENRY COUNTY*	38049C0945D	19-JAN-2000
08	ND	MCHENRY COUNTY*	38049C0955D	19-JAN-2000
08	ND	MCHENRY COUNTY*	38049C0960D	19-JAN-2000
08	ND	MCHENRY COUNTY*	38049C0980D	19-JAN-2000
08	ND	MCHENRY COUNTY*	38049C1244D	19-JAN-2000
08	ND	MCHENRY COUNTY*	38049C1263D	19-JAN-2000
08	ND	MCHENRY COUNTY*	38049CIND0 **	19-JAN-2000
08	ND	MCKINNEY, TOWNSHIP OF	3803110040C	19-JAN-2000
08	ND	MCKINNEY, TOWNSHIP OF	3803110045C	19-JAN-2000
08	ND	MCKINNEY, TOWNSHIP OF	3803110085C	19-JAN-2000
08	ND	MCKINNEY, TOWNSHIP OF	380311IND0 **	19-JAN-2000
08	ND	WARD COUNTY *	38101C0090D	19-JAN-2000
08	ND	WARD COUNTY *	38101C0095D	19-JAN-2000
08	ND	WARD COUNTY *	38101C0100D	19-JAN-2000
08	ND	WARD COUNTY *	38101C0180D	19-JAN-2000
08	ND	WARD COUNTY *	38101C0185D	19-JAN-2000
08	ND	WARD COUNTY *	38101C0190D	19-JAN-2000
08	ND	WARD COUNTY *	38101C0195D	19-JAN-2000
08	ND	WARD COUNTY *	38101C0205D	19-JAN-2000
08	ND	WARD COUNTY *	38101C0215D	19-JAN-2000
08	ND	WARD COUNTY *	38101C0219D	19-JAN-2000
08	ND	WARD COUNTY *	38101C0220D	19-JAN-2000
08	ND	WARD COUNTY *	38101C0240D	19-JAN-2000
08	ND	WARD COUNTY *	38101C0255D	19-JAN-2000
08	ND	WARD COUNTY *	38101C0260D	19-JAN-2000
08	ND	WARD COUNTY *	38101C0280D	19-JAN-2000
08	ND	WARD COUNTY *	38101C0285D	19-JAN-2000
08	ND	WARD COUNTY *	38101C0290D	19-JAN-2000
08	ND	WARD COUNTY *	38101C0295D	19-JAN-2000
08	ND	WARD COUNTY *	38101C0303D	19-JAN-2000
08	ND	WARD COUNTY *	38101C0304D	19-JAN-2000
08	ND	WARD COUNTY *	38101C0315D	19-JAN-2000
08	ND	WARD COUNTY *	38101C0330D	19-JAN-2000
08	ND	WARD COUNTY *	38101C0335D	19-JAN-2000

Region	State	Community	Panel	Panel date
08	ND	WARD COUNTY *	38101C0345D	19-JAN-2000
08	ND	WARD COUNTY *	38101C0505D	19-JAN-2000
08	ND	WARD COUNTY *	38101C0510D	19-JAN-2000
08	ND	WARD COUNTY *	38101C0520D	19-JAN-2000
08	ND	WARD COUNTY *	38101C0530D	19-JAN-2000
08	ND	WARD COUNTY *	38101C0535D	19-JAN-2000
08	ND	WARD COUNTY *	38101C0540D	19-JAN-2000
08	ND	WARD COUNTY *	38101C0545D	19-JAN-2000
08	ND	WARD COUNTY *	38101C0555D	19-JAN-2000
08	ND	WARD COUNTY *	38101C0560D	19-JAN-2000
08	ND	WARD COUNTY *	38101C0565D	19-JAN-2000
08	ND	WARD COUNTY *	38101C0566D	19-JAN-2000
08	ND	WARD COUNTY *	38101C0568D	19-JAN-2000
08	ND	WARD COUNTY *	38101C0570D	19-JAN-2000
08	ND	WARD COUNTY *	38101C0590D	19-JAN-2000
08	ND	WARD COUNTY *	38101C0595D	19-JAN-2000
08	ND	WARD COUNTY *	38101C0615D	19-JAN-2000
08	ND	WARD COUNTY *	38101C0620D	19-JAN-2000
08	ND	WARD COUNTY *	38101C0735D	19-JAN-2000
08	ND	WARD COUNTY *	38101C0755D	19-JAN-2000
08	ND	WARD COUNTY *	38101C0757D	19-JAN-2000
08	ND	WARD COUNTY *	38101C0760D	19-JAN-2000
08	ND	WARD COUNTY *	38101C0776D	19-JAN-2000
08	ND	WARD COUNTY *	38101C0777D	19-JAN-2000
08	ND	WARD COUNTY *	38101C0779D	19-JAN-2000
08	ND	WARD COUNTY *	38101C0780D	19-JAN-2000
08	ND	WARD COUNTY *	38101C0781D	19-JAN-2000
08	ND	WARD COUNTY *	38101C0782D	19-JAN-2000
08	ND	WARD COUNTY *	38101C0783D	19-JAN-2000
08	ND	WARD COUNTY *	38101C0784D	19-JAN-2000
08	ND	WARD COUNTY *	38101C0787D	19-JAN-2000
08	ND	WARD COUNTY *	38101C0791D	19-JAN-2000
08	ND	WARD COUNTY *	38101C0795D	19-JAN-2000
08	ND	WARD COUNTY *	38101C0801D	19-JAN-2000
08	ND	WARD COUNTY *	38101C0802D	19-JAN-2000
08	ND	WARD COUNTY *	38101C0803D	19-JAN-2000
08	ND	WARD COUNTY *	38101C0804D	19-JAN-2000
08	ND	WARD COUNTY *	38101C0810D	19-JAN-2000
08	ND	WARD COUNTY *	38101C0815D	19-JAN-2000
08	ND	WARD COUNTY *	38101C0820D	19-JAN-2000
08	ND	WARD COUNTY *	38101C0830D	19-JAN-2000
08	ND	WARD COUNTY *	38101C0835D	19-JAN-2000
08	ND	WARD COUNTY *	38101C0840D	19-JAN-2000
08	ND	WARD COUNTY *	38101C0845D	19-JAN-2000
08	ND	WARD COUNTY *	38101C0975D	19-JAN-2000
08	ND	WARD COUNTY *	38101C0985D	19-JAN-2000
08	ND	WARD COUNTY *	38101C1000D	19-JAN-2000
08	ND	WARD COUNTY *	38101C1005D	19-JAN-2000
08	ND	WARD COUNTY *	38101C1010D	19-JAN-2000
08	ND	WARD COUNTY *	38101C1020D	19-JAN-2000
08	ND	WARD COUNTY *	38101C1025D	19-JAN-2000
08	ND	WARD COUNTY *	38101C1029D	19-JAN-2000
08	ND	WARD COUNTY *	38101C1030D	19-JAN-2000
08	ND	WARD COUNTY *	38101C1031D	19-JAN-2000
08	ND	WARD COUNTY *	38101C1033D	19-JAN-2000
08	ND	WARD COUNTY *	38101C1035D	19-JAN-2000
08	ND	WARD COUNTY *	38101C1040D	19-JAN-2000
08	ND	WARD COUNTY *	38101C1045D	19-JAN-2000
08	ND	WARD COUNTY *	38101CIND0D**	19-JAN-2000
08	WY	GREEN RIVER, TOWN OF	5600500005C	20-JUN-2000
09	CA	ALAMEDA COUNTY*	0600010090D	09-FEB-2000
09	CA	ALAMEDA COUNTY*	0600010180C	09-FEB-2000
09	CA	ALAMEDA COUNTY*	060001IND0 **	09-FEB-2000
09	CA	AMADOR COUNTY *	060015 E	06-JUN-2000
09	CA	AVENAL, CITY OF	0650730010B	07-MAR-2000
09	CA	AVENAL, CITY OF	065073IND0 **	07-MAR-2000
09	CA	BUTTE COUNTY *	06007C0310D	20-APR-2000
09	CA	BUTTE COUNTY *	06007C0320D	20-APR-2000
09	CA	BUTTE COUNTY *	06007C0330D	20-APR-2000
09	CA	BUTTE COUNTY *	06007C0510D	20-APR-2000
09	CA	BUTTE COUNTY *	06007C0985D	20-APR-2000
09	CA	BUTTE COUNTY *	06007C1025D	20-APR-2000
09	CA	CHICO, CITY OF	06007C0310D	20-APR-2000
09	CA	CHICO, CITY OF	06007C0320D	20-APR-2000

Region	State	Community	Panel	Panel date
09	CA	CHICO, CITY OF	06007C0330D	20-APR-2000
09	CA	CHICO, CITY OF	06007C0510D	20-APR-2000
09	CA	FREMONT,CITY OF	0650280010C	09-FEB-2000
09	CA	FREMONT,CITY OF	0650280029C	09-FEB-2000
09	CA	FREMONT,CITY OF	0650280030C	09-FEB-2000
09	CA	FREMONT,CITY OF	0650280033C	09-FEB-2000
09	CA	FREMONT,CITY OF	0650280045D	09-FEB-2000
09	CA	FREMONT,CITY OF	0650280046D	09-FEB-2000
09	CA	FREMONT,CITY OF	0650280048D	09-FEB-2000
09	CA	FREMONT,CITY OF	065028IND0 **	09-FEB-2000
09	CA	HAYWARD, CITY OF	0650330002D	09-FEB-2000
09	CA	HAYWARD, CITY OF	0650330003E	09-FEB-2000
09	CA	HAYWARD, CITY OF	0650330010E	09-FEB-2000
09	CA	HAYWARD, CITY OF	0650330011E	09-FEB-2000
09	CA	HAYWARD, CITY OF	0650330019E	09-FEB-2000
09	CA	HAYWARD, CITY OF	0650330020E	09-FEB-2000
09	CA	HAYWARD, CITY OF	0650330024E	09-FEB-2000
09	CA	HAYWARD, CITY OF	0650330025D	09-FEB-2000
09	CA	HAYWARD, CITY OF	065033IND0 **	09-FEB-2000
09	CA	IONE, CITY OF	0600160005D	06-JUN-2000
09	CA	NAPA, CITY OF	0602070005D	19-JAN-2000
09	CA	NAPA, CITY OF	060207IND0 **	19-JAN-2000
09	CA	NEWARK, CITY OF	0600090005F	09-FEB-2000
09	CA	NEWARK, CITY OF	060009IND0 **	09-FEB-2000
09	CA	OROVILLE, CITY OF	06007C0985D	20-APR-2000
09	CA	SAN LEANDRO, CITY OF	0600130001C	09-FEB-2000
09	CA	SAN LEANDRO, CITY OF	0600130002C	09-FEB-2000
09	CA	SAN LEANDRO, CITY OF	0600130003C	09-FEB-2000
09	CA	SAN LEANDRO, CITY OF	060013IND0 **	09-FEB-2000
09	CA	UNION CITY, CITY OF	0600140010C	09-FEB-2000
09	CA	UNION CITY, CITY OF	060014IND0 **	09-FEB-2000
09	NV	RENO, CITY OF	32031C2968F	20-APR-2000
09	NV	RENO, CITY OF	32031CIND0 **	20-APR-2000
09	NV	SPARKS, CITY OF	32031CIND0 **	20-APR-2000
09	NV	WASHOE COUNTY*	32031C2968F	20-APR-2000
09	NV	WASHOE COUNTY*	32031CIND0 **	20-APR-2000
10	ID	BLAINE COUNTY *	1651671154B**	20-APR-2000
10	ID	BLAINE COUNTY *	1651671162B	20-APR-2000
10	ID	BLAINE COUNTY *	1651671166B	20-APR-2000
10	ID	BLAINE COUNTY *	1651671175B	20-APR-2000
10	ID	BLAINE COUNTY *	165167IND0 **	20-APR-2000
10	ID	CAREY, CITY OF	1602341154A	20-APR-2000
10	ID	CAREY, CITY OF	1602341162A	20-APR-2000
10	ID	CAREY, CITY OF	1602341166A	20-APR-2000
10	ID	CAREY, CITY OF	160234IND0 **	20-APR-2000
10	OR	AUMSVILLE, CITY OF	41047C0682G	19-JAN-2000
10	OR	AUMSVILLE, CITY OF	41047C0684G	19-JAN-2000
10	OR	AUMSVILLE, CITY OF	41047C0701G	19-JAN-2000
10	OR	AUMSVILLE, CITY OF	41047C0703G	19-JAN-2000
10	OR	AUMSVILLE, CITY OF	41047CIND0 **	19-JAN-2000
10	OR	AURORA, CITY OF	41047C0132G	19-JAN-2000
10	OR	AURORA, CITY OF	41047CIND0 **	19-JAN-2000
10	OR	DETROIT, CITY OF	41047C1060D	19-JAN-2000
10	OR	DETROIT, CITY OF	41047CIND0 **	19-JAN-2000
10	OR	MARION COUNTY*	41047C0025G	19-JAN-2000
10	OR	MARION COUNTY*	41047C0050G	19-JAN-2000
10	OR	MARION COUNTY*	41047C0075G	19-JAN-2000
10	OR	MARION COUNTY*	41047C0100G	19-JAN-2000
10	OR	MARION COUNTY*	41047C0117G	19-JAN-2000
10	OR	MARION COUNTY*	41047C0119G	19-JAN-2000
10	OR	MARION COUNTY*	41047C0125G	19-JAN-2000
10	OR	MARION COUNTY*	41047C0130G	19-JAN-2000
10	OR	MARION COUNTY*	41047C0131G	19-JAN-2000
10	OR	MARION COUNTY*	41047C0132G	19-JAN-2000
10	OR	MARION COUNTY*	41047C0133G	19-JAN-2000
10	OR	MARION COUNTY*	41047C0134G	19-JAN-2000
10	OR	MARION COUNTY*	41047C0136G	19-JAN-2000
10	OR	MARION COUNTY*	41047C0137G	19-JAN-2000
10	OR	MARION COUNTY*	41047C0138G	19-JAN-2000
10	OR	MARION COUNTY*	41047C0139G	19-JAN-2000
10	OR	MARION COUNTY*	41047C0141G	19-JAN-2000
10	OR	MARION COUNTY*	41047C0145G	19-JAN-2000
10	OR	MARION COUNTY*	41047C0175G	19-JAN-2000
10	OR	MARION COUNTY*	41047C0192G	19-JAN-2000

Region	State	Community	Panel	Panel date
10	OR	MARION COUNTY*	41047C0193G	19-JAN-2000
10	OR	MARION COUNTY*	41047C0194G	19-JAN-2000
10	OR	MARION COUNTY*	41047C0200G	19-JAN-2000
10	OR	MARION COUNTY*	41047C0213G	19-JAN-2000
10	OR	MARION COUNTY*	41047C0225G	19-JAN-2000
10	OR	MARION COUNTY*	41047C0243G	19-JAN-2000
10	OR	MARION COUNTY*	41047C0244G	19-JAN-2000
10	OR	MARION COUNTY*	41047C0250G	19-JAN-2000
10	OR	MARION COUNTY*	41047C0266G	19-JAN-2000
10	OR	MARION COUNTY*	41047C0275G	19-JAN-2000
10	OR	MARION COUNTY*	41047C0325G	19-JAN-2000
10	OR	MARION COUNTY*	41047C0327G	19-JAN-2000
10	OR	MARION COUNTY*	41047C0328G	19-JAN-2000
10	OR	MARION COUNTY*	41047C0329G	19-JAN-2000
10	OR	MARION COUNTY*	41047C0331G	19-JAN-2000
10	OR	MARION COUNTY*	41047C0332G	19-JAN-2000
10	OR	MARION COUNTY*	41047C0333G	19-JAN-2000
10	OR	MARION COUNTY*	41047C0334G	19-JAN-2000
10	OR	MARION COUNTY*	41047C0336G	19-JAN-2000
10	OR	MARION COUNTY*	41047C0337G	19-JAN-2000
10	OR	MARION COUNTY*	41047C0338G	19-JAN-2000
10	OR	MARION COUNTY*	41047C0339G	19-JAN-2000
10	OR	MARION COUNTY*	41047C0341G	19-JAN-2000
10	OR	MARION COUNTY*	41047C0342G	19-JAN-2000
10	OR	MARION COUNTY*	41047C0343G	19-JAN-2000
10	OR	MARION COUNTY*	41047C0344G	19-JAN-2000
10	OR	MARION COUNTY*	41047C0351G	19-JAN-2000
10	OR	MARION COUNTY*	41047C0361G	19-JAN-2000
10	OR	MARION COUNTY*	41047C0363G	19-JAN-2000
10	OR	MARION COUNTY*	41047C0364G	19-JAN-2000
10	OR	MARION COUNTY*	41047C0375G	19-JAN-2000
10	OR	MARION COUNTY*	41047C0382G	19-JAN-2000
10	OR	MARION COUNTY*	41047C0400G	19-JAN-2000
10	OR	MARION COUNTY*	41047C0425G	19-JAN-2000
10	OR	MARION COUNTY*	41047C0650G	19-JAN-2000
10	OR	MARION COUNTY*	41047C0652G	19-JAN-2000
10	OR	MARION COUNTY*	41047C0656G	19-JAN-2000
10	OR	MARION COUNTY*	41047C0657G	19-JAN-2000
10	OR	MARION COUNTY*	41047C0675G	19-JAN-2000
10	OR	MARION COUNTY*	41047C0676G	19-JAN-2000
10	OR	MARION COUNTY*	41047C0677G	19-JAN-2000
10	OR	MARION COUNTY*	41047C0679G	19-JAN-2000
10	OR	MARION COUNTY*	41047C0681G	19-JAN-2000
10	OR	MARION COUNTY*	41047C0682G	19-JAN-2000
10	OR	MARION COUNTY*	41047C0683G	19-JAN-2000
10	OR	MARION COUNTY*	41047C0684G	19-JAN-2000
10	OR	MARION COUNTY*	41047C0700G	19-JAN-2000
10	OR	MARION COUNTY*	41047C0701G	19-JAN-2000
10	OR	MARION COUNTY*	41047C0703G	19-JAN-2000
10	OR	MARION COUNTY*	41047C0704G	19-JAN-2000
10	OR	MARION COUNTY*	41047C0708G	19-JAN-2000
10	OR	MARION COUNTY*	41047C0716G	19-JAN-2000
10	OR	MARION COUNTY*	41047C0725G	19-JAN-2000
10	OR	MARION COUNTY*	41047C0750G	19-JAN-2000
10	OR	MARION COUNTY*	41047C0775G	19-JAN-2000
10	OR	MARION COUNTY*	41047C0793G	19-JAN-2000
10	OR	MARION COUNTY*	41047C0794G	19-JAN-2000
10	OR	MARION COUNTY*	41047C0800G	19-JAN-2000
10	OR	MARION COUNTY*	41047C0975G	19-JAN-2000
10	OR	MARION COUNTY*	41047C1000G	19-JAN-2000
10	OR	MARION COUNTY*	41047C1025G	19-JAN-2000
10	OR	MARION COUNTY*	41047C1060D	19-JAN-2000
10	OR	MARION COUNTY*	41047C1078G	19-JAN-2000
10	OR	MARION COUNTY*	41047C1079G	19-JAN-2000
10	OR	MARION COUNTY*	41047C1083G	19-JAN-2000
10	OR	MARION COUNTY*	41047CIND0 **	19-JAN-2000

[FR Doc. 00–23353 Filed 9–13–00; 8:45 am]

BILLING CODE 6718–04–F

FEDERAL RESERVE SYSTEM

Formations of, Acquisitions by, and Mergers of Bank Holding Companies

The companies listed in this notice have applied to the Board for approval, pursuant to the Bank Holding Company Act of 1956 (12 U.S.C. 1841 *et seq.*) (BHC Act), Regulation Y (12 CFR Part 225), and all other applicable statutes and regulations to become a bank holding company and/or to acquire the assets or the ownership of, control of, or the power to vote shares of a bank or bank holding company and all of the banks and nonbanking companies owned by the bank holding company, including the companies listed below.

The applications listed below, as well as other related filings required by the Board, are available for immediate inspection at the Federal Reserve Bank indicated. The application also will be available for inspection at the offices of the Board of Governors. Interested persons may express their views in writing on the standards enumerated in the BHC Act (12 U.S.C. 1842(c)). If the proposal also involves the acquisition of a nonbanking company, the review also includes whether the acquisition of the nonbanking company complies with the standards in section 4 of the BHC Act (12 U.S.C. 1843). Unless otherwise noted, nonbanking activities will be conducted throughout the United States. Additional information on all bank holding companies may be obtained from the National Information Center website at www.ffiec.gov/nic/.

Unless otherwise noted, comments regarding each of these applications must be received at the Reserve Bank indicated or the offices of the Board of Governors not later than October 10, 2000.

A. Federal Reserve Bank of Kansas City (D. Michael Manies, Assistant Vice President) 925 Grand Avenue, Kansas City, Missouri 64198–0001:

1. Big Mac Bancshares, Inc., Hoxie, Kansas; to become a bank holding company by acquiring up to 100 percent of the voting shares of Peoples State Bank, McDonald, Kansas.

Board of Governors of the Federal Reserve System, September 11, 2000.

Jennifer J. Johnson,

Secretary of the Board.

[FR Doc. 00–23655 Filed 9–13–00; 8:45 am]

BILLING CODE 6210–01–P

FEDERAL RESERVE SYSTEM

Notice of Proposals To Engage in Permissible Nonbanking Activities or To Acquire Companies That Are Engaged in Permissible Nonbanking Activities

The companies listed in this notice have given notice under section 4 of the Bank Holding Company Act (12 U.S.C. 1843) (BHC Act) and Regulation Y, (12 CFR Part 225) to engage *de novo*, or to acquire or control voting securities or assets of a company, including the companies listed below, that engages either directly or through a subsidiary or other company, in a nonbanking activity that is listed in § 225.28 of Regulation Y (12 CFR 225.28) or that the Board has determined by Order to be closely related to banking and permissible for bank holding companies. Unless otherwise noted, these activities will be conducted throughout the United States.

Each notice is available for inspection at the Federal Reserve Bank indicated. The notice also will be available for inspection at the offices of the Board of Governors. Interested persons may express their views in writing on the question whether the proposal complies with the standards of section 4 of the BHC Act. Additional information on all bank holding companies may be obtained from the National Information Center website at www.ffiec.gov/nic/.

Unless otherwise noted, comments regarding the applications must be received at the Reserve Bank indicated or the offices of the Board of Governors not later than September 29, 2000.

A. Federal Reserve Bank of Philadelphia (Michael E. Collins, Senior Vice President), 100 North 6th Street, Philadelphia, Pennsylvania 19105–1521:

1. USABancShares.com, Philadelphia, Pennsylvania; to retain shares of Bondsonline Group, Inc., Mercer Island, Washington, and thereby engage in data processing activities, pursuant to § 225.28(b)(14) of Regulation Y.

B. Federal Reserve Bank of San Francisco (Maria Villanueva, Consumer Regulation Group), 101 Market Street, San Francisco, California 94105–1579:

1. Humboldt Bancorp, Eureka, California; to acquire Central Pacific Mortgage Company Folsom, California, and thereby engage in originating and selling mortgage loans, pursuant to § 225.28(b)(1) of Regulation Y.

Board of Governors of the Federal Reserve System, September 11, 2000.

Jennifer J. Johnson,

Secretary of the Board.

[FR Doc. 00–23656 Filed 9–13–00; 8:45 am]

BILLING CODE 6210–01–P

GENERAL ACCOUNTING OFFICE

Federal Accounting Standards Advisory Board

AGENCY: General Accounting Office.

ACTION: Notice of meeting on October 5–6, 2000.

Board Action: Pursuant to the Federal Advisory Committee Act (Pub. L. 92–463), as amended, and the FASAB Rules of Procedure, as amended in October, 1999, notice is hereby given that the Federal Accounting Standards Advisory Board (FASAB) will meet on Thursday, October 5, from 9 a.m. to 4 p.m. and Friday, October 6, from 9 a.m. to 4 p.m. in room 6N30, 441 G St., NW, Washington, DC. Please note that the meeting room is different from the usual meeting room.

The purpose of the meeting is to discuss:

- Stewardship Reporting issues,
- A proposed amendment to paragraph 65.2 of SFFAS 7, Accounting for Revenue and Other Financing Sources,
- Responses to the February 2000 exposure draft on accounting for direct loans and loan guarantees,
- National Defense PP&E issues, and
- Other topics as necessary.

A Steering Committee meeting of the Board's Principal Board members will be held in conjunction with the Board meeting. A more detailed agenda can be obtained from the FASAB website (*www.financenet.gov/fasab.htm* after September 25th, 2000.

Any interested person may attend the meeting as an observer. Board discussion and reviews are open to the public. GAO Building security requires advance notice of your attendance. Please notify FASAB by October 3 of your planned attendance by calling 202–512–7350.

FOR FURTHER INFORMATION CONTACT: Wendy Comes, Executive Director, 441 G St., NW, Mailstop 6K17V, Washington, DC 20548, or call (202) 512–7350.

Authority: Federal Advisory Committee Act. Pub. L. No. 92–463.

Dated: September 8, 2000.

Wendy M. Comes,

Executive Director.

[FR Doc. 00–23663 Filed 9–13–00; 8:45 am]

BILLING CODE 1610–01–M

GENERAL SERVICES ADMINISTRATION

Public Buildings Service

Notice of Availability of Draft Environment Impact Statement; Proposed Federal Courthouse and Office Building, Eugene/Springfield Metro Area, Lane County, Oregon

Pursuant to section 102(2)(C) of the National Environmental Policy Act (NEPA) of 1969, as amended, as implemented by the Council on Environmental Quality (40 CFR Parts 1500–1508), the General Services Administration (GSA) has filed with the Environmental Protection Agency, and made available to other government and interested private parties, the Draft Environmental Impact Statement (DEIS) for the proposed construction of a 265,290 gross square feet Courthouse and office building including 80 secured parking spaces, located in the urban center of either Eugene/Springfield, Lane County, Oregon.

Two public meetings will be held to solicit comment on the DEIS. They will be held on September 26 Eugene at the Hilton Hotel, 66 East 6th Ave, Eugene, WA, and on September 27th at the Springfield City Hall—Council Meeting Room, 225 5th Street, Springfield, OR.

The DEIS is on file and a copy may be obtained from U.S. General Services Administration, Region 10, Attention: Michael D. Levine, 10PCA, 400 15th Street, SW, Auburn, Washington 98001 (206) 931–7263. A summary of the DEIS can be viewed at the following website: www.northwest.gsa.gov/eugeneusch/intro.htm.

Written comments regarding the Draft Environmental Impact Statement may be submitted until 45 days after publication of the Draft and should be addressed to: John L. Meerscheidt, Herrera Environmental Consultants, 2200 Sixth Ave, Suite 601, Seattle, Washington 98121.

Dated: September 5, 2000.

L. Jay Pearson,

Regional Administrator (10A).

[FR Doc. 00–23604 Filed 9–13–00; 8:45 am]

BILLING CODE 6820–23–M

DEPARTMENT OF HEALTH AND HUMAN SERVICES

Food and Drug Administration

[Docket No. 00N–1494]

Agency Information Collection Activities; Proposed Collection; Comment Request; Medical Devices; Classification/Reclassification; Restricted Devices: Analyte Specific Reagents

AGENCY: Food and Drug Administration, HHS.

ACTION: Notice.

SUMMARY: The Food and Drug Administration (FDA) is announcing an opportunity for public comment on the proposed collection of certain information by the agency. Under the Paperwork Reduction Act of 1995 (the PRA), Federal agencies are required to publish notice in the **Federal Register** concerning each proposed collection of information, including each proposed extension of an existing information collection, and to allow 60 days for public comment in response to the notice. This notice solicits comments on labeling requirements for certain in vitro diagnostic products for manufacturers of analyte specific reagents (ASR's).

DATES: Submit written or electronic comments on the collection of information by November 13, 2000.

ADDRESSES: Submit electronic comments on the collection of information via the Internet at: http://www.accessdata.fda.gov/scripts/oc/dockets/comments/commentdocket.cfm. Submit written comments on the collection of information to the Dockets Management Branch (HFA–305), Food and Drug Administration, 5630 Fishers Lane, rm. 1061, Rockville, MD 20852. All comments should be identified with the docket number found in brackets in the heading of this document.

FOR FURTHER INFORMATION CONTACT: Peggy Schlosburg, Office of Information Resources Management (HFA–250), Food and Drug Administration, 5600 Fishers Lane, Rockville, MD 20857, 301–827–1223.

SUPPLEMENTARY INFORMATION: Under the PRA (44 U.S.C. 3501–3520), Federal agencies must obtain approval from the Office of Management and Budget (OMB) for each collection of information they conduct or sponsor. ''Collection of information'' is defined in 44 U.S.C. 3502(3) and 5 CFR 1320.3(c) and includes agency requests or requirements that members of the public submit reports, keep records, or provide information to a third party. Section 3506(c)(2)(A) of the PRA (44 U.S.C. 3506(c)(2)(A)) requires Federal agencies to provide a 60–day notice in the **Federal Register** concerning each proposed collection of information, including each proposed extension of an existing collection of information, before submitting the collection to OMB for approval. To comply with this requirement, FDA is publishing notice of the proposed collection of information set forth in this document.

With respect to the following collection of information, FDA invites comments on: (1) Whether the proposed collection of information is necessary for the proper performance of FDA's functions, including whether the information will have practical utility; (2) the accuracy of FDA's estimate of the burden of the proposed collection of information, including the validity of the methodology and assumptions used; (3) ways to enhance the quality, utility, and clarity of the information to be collected; and (4) ways to minimize the burden of the collection of information on respondents, including through the use of automated collection techniques, when appropriate, and other forms of information technology.

Medical Devices: Classification/Reclassification; Restricted Devices; Specific Reagents—21 CFR Part 809 (OMB No. 0910–0361)—Extension

Section 513 of the Federal Food, Drug, and Cosmetic Act (the act) (21 U.S.C. 360c) requires that FDA classify all devices into one of three classes depending on the degree of regulatory control needed to provide reasonable assurance of their safety and effectiveness. The three classes of devices are: Class I, general controls; class II, special controls; and class III, premarket approval. Section 502 of the act (21 U.S.C. 352) establishes certain labeling requirements for devices including requirements that the labeling not be false or misleading in any particular, that the labeling contain the established name for the device, and that the labeling contain adequate directions for use. Section 520(e) of the act (21 U.S.C. 360j(e)) provides that FDA may restrict the sale, distribution, or use of a device, if FDA determines that there cannot otherwise be reasonable assurance of its safety and effectiveness. Sections 502(q) and (r) of the act authorizes FDA to regulate the advertising of devices that are restricted under section 520(e) of the act.

FDA restricts distribution of analyte specific reagents to laboratories certified under the Clinical Laboratory Improvement Amendments of 1988 as qualified to perform high complexity

testing to manufacturers of in vitro diagnostic products and to organizations that use the tests for reasons other than providing diagnostic information to physicians and patients. FDA has established certain labeling requirements for suppliers of ASR's and some requirements regarding advertising and promotional materials for ASR's. FDA believes the labeling requirements and restrictions on advertising and promotion are necessary to ensure that laboratories developing tests from ASR's have sufficient information to use the ASR's appropriately and to limit specific claims by manufacturers, because these ASR's are intended to be used as ingredients in a variety of ways by laboratories qualified to do high complexity testing.

The most likely respondents to this information collection will primarily be medical device manufacturers of in vitro products, clinical laboratories, and third parties.

FDA estimates the burden of this collection of information as follows:

TABLE 1.—ESTIMATED ANNUAL REPORTING BURDEN[1]

21 CFR Section	No. of Respondents	Annual Frequency per Response	Total Annual Responses	Hours per Response	Total Hours
809.10(e)	300	25	7,500	1	7,500
809.30(d)	300	25	7,500	1	7,500
Totals					15,000

[1] There are no capital costs or operating and maintenance costs associated with this collection of information.

The burden is based on the estimate and averaging of five establishments. The number of establishments manufacturing or supplying ASR's ranged from 100 to 500 with the average being 300. Consequently, FDA estimates the number of ASR manufacturers and suppliers subject to the reporting requirements is approximately 300.

The number of ASR's being manufactured was derived by asking the same five establishments. Three of the establishments gave estimates for the number of ASR's that ranged from 5,000 to 10,000, with the average being 7,500.

In order to determine the number of ASR's manufactured by each respondent, FDA used the average number of ASR's manufactured and divided it by the number of ASR manufacturers (7,500 ÷ 300). Consequently, the estimate of the number of ASR's manufactured by each respondent is approximately 25.

FDA estimates for each ASR, it adds approximately 1 additional hour to the design and review process for new labels to conform with the requirements of § 809.10(e) (21 CFR 890.10(e)). FDA also estimates that the total reporting hour burden is approximately 7,500 hours (300 x 25).

FDA estimates for each ASR it adds approximately 1 hour to the preparation and review time for the professional materials to ascertain compliance with § 809.30(d). FDA estimates that the total reporting hour burden for promotional materials is approximately 7,500 (300 X 25).

Dated: September 7, 2000.

William K. Hubbard,

Senior Associate Commissioner for Policy, Planning, and Legislation.

[FR Doc. 00–23546 Filed 9–13–00; 8:45 am]

BILLING CODE 4160–01–F

DEPARTMENT OF HEALTH AND HUMAN SERVICES

Food and Drug Administration

[Docket No. 00N–1303]

Agency Information Collection Activities; Submission for OMB Review; Comment Request; Agreement for Shipment of Devices for Sterilization

AGENCY: Food and Drug Administration, HHS.

ACTION: Notice.

SUMMARY: The Food and Drug Administration (FDA) is announcing that the proposed collection of information listed below has been submitted to the Office of Management and Budget (OMB) for review and clearance under the Paperwork Reduction Act of 1995.

DATES: Submit written comments on the collection of information by October 16, 2000.

ADDRESSES: Submit written comments on the collection of information to the Office of Information and Regulatory Affairs, OMB, New Executive Office Bldg., 725 17th St. NW., rm. 10235, Washington, DC 20503, Attn: Wendy Taylor, Desk Officer for FDA.

FOR FURTHER INFORMATION CONTACT: Peggy Schlosburg, Office of Information Resources Management (HFA–250), Food and Drug Administration, 5600 Fishers Lane, Rockville, MD 20857, 301–827–1223.

SUPPLEMENTARY INFORMATION: In compliance with 44 U.S.C. 3507, FDA has submitted the following proposed collection of information to OMB for review and clearance.

Agreement for Shipment of Devices for Sterilization—21 CFR 801.150(e) (OMB Control No. 0910–0131)—Extension

Under sections 501(c) and 502(a) of the Federal Food, Drug, and Cosmetic Act (the act) (21 U.S.C. 351(c) and 352(a)), nonsterile devices that are labeled as sterile but are in interstate transit to a facility to be sterilized are adulterated and misbranded. FDA regulations in § 801.150(e) (21 CFR 801.150(e)) establish a control mechanism by which firms may manufacture and label medical devices as sterile at one establishment and ship the devices in interstate commerce for sterilization at another establishment, a practice that facilitates the processing of devices and is economically necessary for some firms. Under § 801.150(e), manufacturers and sterilizers may sign an agreement containing the following: (1) Instructions for maintaining accountability of the number of units in each shipment; (2) acknowledgment that the devices are nonsterile, being shipped for further processing; and (3) specifications for sterilization processing.

This agreement allows the manufacturer to ship misbranded products to be sterilized without initiating regulatory action and provides FDA with a means to protect consumers from use of nonsterile products. During routine plant inspections, FDA normally reviews agreements that must be kept for 2 years after final shipment or delivery of devices. The respondents to this collection of information are device manufacturers and contract sterilizers.

In the **Federal Register** of June 12, 2000 (65 FR 36816), the agency requested comments on the proposed collection of information. No significant comments were received.

FDA estimates the burden of this collection of information as follows:

TABLE 1.—ESTIMATED ANNUAL REPORTING BURDEN[1]

21 CFR Section	No. of Respondents	Annual Frequency per Response	Total Annual Responses	Hours per Response	Total Hours
801.150(e)	80	20	1,800	4	7,200
Total					7,200

[1] There are no capital costs or operating and maintenance costs associated with this collection of information.

FDA's estimate of the burden is based on actual data obtained from industry during the past 3 years where there are approximately 90 firms subject to this requirement.

No burden has been estimated for the recordkeeping requirement in § 801.150(a)(2) because these records are maintained as a usual and customary part of normal business activities. Under 5 CFR 1320.3(b)(2), the time, effort, and financial resources necessary to comply with a collection of information are excluded from the burden estimate if the reporting, recordkeeping, or disclosure activities needed to comply are usual and customary because they would occur in the normal course of activities.

Dated: September 7, 2000.

William K. Hubbard,

Senior Associate Commissioner for Policy, Planning, and Legislation.

[FR Doc. 00–23547 Filed 9–10–00; 8:45 am]

BILLING CODE 4160–01–F

DEPARTMENT OF HEALTH AND HUMAN SERVICES

Health Care Financing Administration

[Document Identifier: HCFA–901–1 and HCFA–1763]

Agency Information Collection Activities: Submission for OMB Review; Comment Request

In compliance with the requirement of section 3506(c)(2)(A) of the Paperwork Reduction Act of 1995, the Health Care Financing Administration (HCFA), Department of Health and Human Services, has submitted to the Office of Management and Budget (OMB) the following proposal for the collection of information. Interested persons are invited to send comments regarding the burden estimate or any other aspect of this collection of information, including any of the following subjects: (1) The necessity and utility of the proposed information collection for the proper performance of the agency's functions; (2) the accuracy of the estimated burden; (3) ways to enhance the quality, utility, and clarity of the information to be collected; and (4) the use of automated collection techniques or other forms of information technology to minimize the information collection burden.

(1) *Type of Information Collection Request:* Revision of a currently approved collection;

Title of Information Collection: Qualification Application and Supporting Regulations in 42 CFR Section 417.408 and 417.143;

Form No.: HCFA–901–1 (OMB# 0938–0470);

Use: Prepaid health plans must meet certain regulatory requirements to be federally qualified health maintenance organizations. This application is the collection form used to obtain the information from health plans that allow HCFA staff to determine compliance with the regulations;

Frequency: Other: One-time;

Affected Public: Business or other for-profit, not-for-profit institutions, and State, Local, or Tribal Government;

Number of Respondents: 35;

Total Annual Responses: 35;

Total Annual Hours: 3,500.

(2) *Type of Information Collection Request:* Extension of a currently approved collection;

Title of Information Collection: Request for Termination of Premium Hospital and/or Supplementary Medical Insurance and Supporting Regulations in 42 CFR 406.28 and 407.27;

Form No.: HCFA–1763 (OMB No. 0938–0025);

Use: The HCFA–1763 is used by beneficiaries to request voluntary termination from premium hospital and/or supplementary medical insurance;

Frequency: One time only;

Affected Public: Individuals or Households, Federal Government, and State, Local or Tribal Government;

Number of Respondents: 14,000;

Total Annual Responses: 14,000;

Total Annual Hours: 5,833.

To obtain copies of the supporting statement for the proposed paperwork collections referenced above, access HCFA's Web site address at http://www.hcfa.gov/regs/prdact95.htm, or E-mail your request, including your address and phone number, to Paperwork@hcfa.gov, or call the Reports Clearance Office on (410) 786–1326. Written comments and recommendations for the proposed information collections must be mailed within 30 days of this notice directly to the OMB Desk Officer designated at the following address: OMB Human Resources and Housing Branch, Attention: Allison Eydt, New Executive Office Building, Room 10235, Washington, DC 20503.

Dated: August 28, 2000.

John P. Burke III,

HCFA Reports Clearance Officer, HCFA, Office of Information Services, Security and Standards Group, Division of HCFA Enterprise Standards.

[FR Doc. 00–23625 Filed 9–13–00; 8:45 am]

BILLING CODE 4120–03–P

DEPARTMENT OF HEALTH AND HUMAN SERVICES

National Institutes of Health

National Cancer Institute: Development of a Molecular Rotation Engine

An opportunity for a Cooperative Research and Development Agreement (CRADA) is available for collaboration with the NCI Intramural Division of Basic Sciences for the development of an ATP-driven, molecular-based rotation engine. The opportunity is open to a multi or single party collaboration that would require the input of molecular biology and genetic engineering experience on the part of the potential collaborator or collaborators.

AGENCY: National Cancer Institute, National Institutes of Health, PHS, DHHS.

ACTION: Notice of Opportunity for Cooperative Research and Development Agreement.

SUMMARY: Pursuant to the Federal Technology Transfer Act of 1986 (FTTA, 15 U.S.C. 3710; Executive Order 12591 of April 10, 1987 as amended by the National Technology Transfer and Advancement Act of 1995), the National Cancer Institute (NCI) of the National Institutes of Health (NIH) of the Public Health Service (PHS) of the Department of Health and Human Services (DHHS) seeks a Cooperative Research and Development Agreement (CRADA) with a biotechnology, pharmaceutical, or other company that possesses the ability to assist in the development and commercialization of the described technology. CRADA proposals for development of this technology should include the development of a prototype. The CRADA would have an expected duration of one (1) to five (5) years. The goals of the CRADA will include the rapid publication of research results and timely commercialization of any products that result from the research. The CRADA Collaborator or Collaborators will have an option to negotiate the terms of an exclusive or nonexclusive commercialization license to subject inventions arising under the CRADA.

ADDRESSES: Proposals and questions about this CRADA opportunity may be addressed to Mr. Kevin Brand, Technology Development & Commercialization Branch, National Cancer Institute—Frederick Cancer Research and Development Center, Fairview Center, 1003 West Seventh Street, Room 502, Frederick, MD 20852, Telephone: (301) 846–5222; Facsimile: (301) 846–6820.

EFFECTIVE DATE: Organizations must submit a proposal summary of one page or less, to NCI on or before November 13, 2000. Guidelines for preparing full CRADA proposals will be communicated shortly thereafter to all respondents with whom initial discussions will have established sufficient mutual interest.

SUPPLEMENTARY INFORMATION:

Technology Available

The National Cancer Institute (NCI) of the National Institutes of Health (NIH) has a pending patent application related to the development of a molecular-based rotation engine. The engine is constructed of two cylinders, one inner and one outer whose inner surfaces are coated with oriented mobility or contractile proteins. In the presence of ATP the cylinders rotate relative to each other. Speed of relative rotation is controlled by the concentration of ATP or by nesting a series of cylinders inside each other. Power is controlled by adjusting the length of the cylinders. One advantage of this technology over other macroscopic motors is that it can be used to supply power to prosthetic implants and medical devices without the drawbacks associated with conventional power sources. Other advantages are that the motor operates at room temperature, and that fuels can be prepared from sugar, so the motor does not contribute to carbon dioxide pollution and the waste products are biologically safe. The NCI, in accordance with the regulations governing the transfer of agents which the Government has taken an active role in developing (37 CFR 404.8), is seeking a biotechnology, pharmaceutical or other similarly situated company which can develop a working model of this molecular engine and has the ability to make it commercially available. Those potential collaborators interested in reviewing NCI's pending patent application on this technology should contact J.P. Kim at the National Institutes of Health, Office of Technology Transfer, 6011 Executive Boulevard, Suite 325, Rockville, Maryland 20852, Telephone (301) 496–7056; Facsimile (301) 496–0220.

The role of the National Cancer Institute in this CRADA may include, but not be limited to:

1. Providing intellectual, scientific, and technical expertise and experience related to the development of a prototype molecular-based engine.

1. Providing collaborator or collaborators access to confidential information relating to the pending patent application which embodies this technology.

2. Planning research studies and interpreting research results.

3. Publishing research results.

The role of the CRADA Collaborator may include, but not be limited to:

1. Providing significant intellectual, scientific, and technical expertise or experience for the development of a prototype molecular-based engine.

Collaborators must have expertise in standard molecular biology: Gene construction, cloning and protein isolation. Experience in genetic engineering is essential. Other areas of expertise would include silicon micromachining and past work in nanotechnology.

2. Providing technical and financial support to facilitate scientific goals, as well as personnel and laboratory space.

3. Assume responsibility for the commercialization, marketing and distribution of such a molecular engine should a sound prototype be developed.

4. Planning research studies and interpreting research results.

5. Publishing research results.

Selection criteria for choosing the CRADA Collaborator may include, but not be limited to:

1. The ability to collaborate with NCI on the research and development of this technology. The ability to collaborate with NCI can be demonstrated through experience and expertise in this or related areas of technology indicating the ability to contribute intellectually to ongoing research and development.

2. The demonstration of adequate resources to perform the research and development of this technology (*e.g.* facilities, personnel and expertise) and accomplish objectives according to an appropriate timetable to be outlined in the CRADA Collaborator's proposal.

3. The willingness to commit best effort and demonstrated resources to the research anddevelopment of this technology, as outlined in the CRADA Collaborator's proposal.

4. The demonstration of expertise in the commercial development and production of products related to this area of technology.

5. The level of financial support the CRADA Collaborator will provide for CRADA-related Government activities.

6. The willingness to cooperate with the National Cancer Institute in the timely publication of research results.

7. The agreement to be bound by the appropriate DHHS regulations relating to human subjects, and all PHS policies relating to the use and care of laboratory animals.

8. The willingness to accept the legal provisions and language of the CRADA with only minor modification, if any. These provisions govern the distribution of patent rights to CRADA inventions. Generally, the rights of ownership are retained by the organization that is the employer of the inventor, with (1) the grant of a license for research and other Government purposes to the Government when the CRADA Collaborator's employee is the sole inventor, or (2) the grant of an option to elect an exclusive or nonexclusive license to the CRADA Collaborator when the Government employee is the sole inventor.

Dated: September 3, 2000.

Kathleen Sybert,

Branch Chief, Technology Development & Commercialization Branch, National Cancer Institute, National Institutes of Health.

[FR Doc. 00–23670 Filed 9–13–00; 8:45 am]

BILLING CODE 4140–01–P

DEPARTMENT OF HEALTH AND HUMAN SERVICES

National Institutes of Health

National Cancer Institute: Development of a Method for High Speed Parallel Nucleic Acid Sequencing

An opportunity for a Cooperative Research and Development Agreement (CRADA) is available for collaboration with the NCI Intramural Division of Basic Sciences to develop a new high speed method for DNA sequencing called Two Dye Sequencing (TDS). This new sequencing method employs the use of a fluoresced DNA polymerase to catalyze polymerization of likewise fluoresced oligonucleotides, with the entire construct working in the chamber of a microscope point of view which can detect individual molecules. Collaborator expertise in genetic engineering is essential to this project.

AGENCY: National Cancer Institute, National Institutes of Health, PHS, DHHS.

ACTION: Notice of opportunity for cooperative research and development agreement.

SUMMARY: Pursuant to the Federal Technology Transfer Act of 1986 (FTTA, 15 U.S.C. 3710; Executive Order 12591 of April 10, 1987 as amended by the National Technology Transfer and Advancement Act of 1995), the National Cancer Institute (NCI) of the National Institutes of Health (NIH) of the Public Health Service (PHS) of the Department of Health and Human Services (DHHS) seeks a Cooperative Research and Development Agreement (CRADA) with a pharmaceutical or biotechnology company. CRADA proposals should include development of a prototype. The CRADA would have an expected duration of one(1) to five(5) years. The goals of the CRADA will include the rapid publication of research results and timely commercialization of products, diagnostics and treatments that result from the research. The CRADA Collaborator will have an option to negotiate the terms of an exclusive or nonexclusive commercialization license to subject inventions arising under the CRADA.

ADDRESSES: Proposals and questions about this CRADA opportunity may be addressed to Mr. Kevin Brand, Technology Development & Commercialization Branch, National Cancer Institute—Frederick Cancer Research and Development Center, Fairview Center, 1003 West Seventh Street, Room 502, Frederick, MD 21701, Telephone: (301) 846–5222; Facsimile: (301) 846–6820.

EFFECTIVE DATE: Organizations must submit a proposal summary of one page or less, to NCI on or before November 13, 2000. Guidelines for preparing full CRADA proposals will be communicated shortly thereafter to all respondents with whom initial discussions will have established sufficient mutual interest.

SUPPLEMENTARY INFORMATION:

Technology Available

The National Cancer Institute (NCI) of the National Institutes of Health (NIH) has initiated the development of a new high speed DNA sequencing method designated as Two Dye Sequencing (TDS), and has a pending patent application embodying this technology. This method employs engineered DNA polymerases which are labeled with a fluorophore such as Green Fluorescent Protein (GFP) and are combined with an annealed oligonucleotide primer in a chamber of a microscope field of view capable of detecting individual molecules. Four nucleotide triphosphates, each labeled on the base with a different fluorescent dye are introduced to the reaction. Light of a specific wavelength is used to excite the fluorophore on the polymerase, which in turn excites the neighboring fluorophore on the nucleotide by Fluorescence Resonance Energy Transfer (FRET). As nucleotides are added to the primer, their spectral emissions provide sequence information of the DNA molecule. The NCI, in accordance with the regulations governing the transfer of agents which the Government has taken an active role in developing (37 CFR 404.8), is seeking a pharmaceutical or biotechnology company which can assist in the development of a working construct that embodies this technology for commercialization. Those potential collaborators interested in reviewing NCI's pending patent application on this technology should contact J.P. Kim at the National Institutes of Health, Office of Technology Transfer, 6011 Executive Boulevard, Suite 325, Rockville, Maryland 20852, Telephone (301) 496–7056; Facsimile (301) 496-0220.

The role of the National Cancer Institute in this CRADA may include, but not be limited to:

1. Providing intellectual, scientific, and technical expertise and experience related to the development of this new method for sequencing DNA via the TDS technology.
2. Providing collaborator access to confidential information relating to the pending patent application which embodies this technological improvement in DNA sequencing.
3. Planning research studies and interpreting research results.
4. Publishing research results.

The role of the CRADA Collaborator may include, but not be limited to:

1. Providing significant intellectual, scientific, and technical expertise or experience to the development of a prototype that employs this two-dye sequencing method. Although expertise in genetic engineering is essential, expertise in chemical synthesis, microscopy, laser optics, single molecule detection, imaging processing and computer algorithms or a willingness to enter these fields will be favored.
2. Providing technical and financial support to facilitate these scientific goals, as well as personnel and laboratory space.
3. Assuming responsibility for the commercialization, marketing and distribution of this sequencing method.
4. Planning research studies and interpreting research results.
5. Publishing research results.

Selection criteria for choosing the CRADA Collaborator may include, but not be limited to:

1. The ability to collaborate with NCI on the research and development of this technology. The ability to collaborate with NCI can be demonstrated through experience and expertise in this or related areas of technology indicating the ability to contribute intellectually to ongoing research and development.
2. The demonstration of adequate resources to perform the research and development of this technology (e.g. facilities, personnel and expertise) and accomplish objectives according to an appropriate timetable to be outlined in the CRADA Collaborator's proposal.
3. The willingness to commit best effort and demonstrated resources to the research and development of this technology, as outlined in the CRADA Collaborator's proposal.
4. The demonstration of expertise in the commercial development and production of products related to this area of technology.
5. The level of financial support the CRADA Collaborator will provide for CRADA-related Government activities.
6. The willingness to cooperate with the National Cancer Institute in the timely publication of research results.
7. The agreement to be bound by the appropriate DHHS regulations relating to human subjects, and all PHS policies relating to the use and care of laboratory animals.
8. The willingness to accept the legal provisions and language of the CRADA

with only minor modification, if any. These provisions govern the distribution of patent rights to CRADA inventions. Generally, the rights of ownership are retained by the organization that is the employer of the inventor, with (1) the grant of a license for research and other Government purposes to the Government when the CRADA Collaborator's employee is the sole inventor, or (2) the grant of an option to elect an exclusive or nonexclusive license to the CRADA Collaborator when the Government employee is the sole inventor.

Dated: September 3, 2000.

Kathleen Sybert,

Branch Chief, Technology Development & Commercialization Branch, National Cancer Institute, National Institutes of Health.

[FR Doc. 00–23672 Filed 9–13–00; 8:45 am]

BILLING CODE 4140–01–P

DEPARTMENT OF HEALTH AND HUMAN SERVICES

National Institutes of Health

National Cancer Institute: Development of Molecular Computing Devices.

An opportunity is available for a Cooperative Research and Development Agreement (CRADA) for collaboration with the NCI Intramural Division of Basic Sciences for the development of a prototype molecular-based computer, whose mode of operation would be by the select binding of proteins along a construct. This computer could be capable of data storage, the transformation of binary information, and signal readout. This opportunity is open for a multi-party collaboration where one collaborator provides biological expertise, particularly in the field of genetic engineering, and the second provides silicon-based technological expertise, particularly expertise in silicon micromachining.

AGENCY: National Cancer Institute, National Institutes of Health, PHS, DHHS.

ACTION: Notice of Opportunity for a Cooperative Research and Development Agreement.

SUMMARY: Pursuant to the Federal Technology Transfer Act of 1986 (FTTA, 15 U.S.C. 3710; Executive Order 12591 of April 10, 1987 as amended by the National Technology Transfer and Advancement Act of 1995), the National Cancer Institute (NCI) of the National Institutes of Health (NIH) of the Public Health Service (PHS) of the Department of Health and Human Services (DHHS) seeks a Cooperative Research and Development Agreement (CRADA with a biotechnology and/or silicon-based technology company. The CRADA would have an expected duration of one(1) to five(5) years. The goals of the CRADA will include the rapid publication of research results and timely commercialization of products, diagnostics and treatments that result from the research. The CRADA Collaborator(s) will have an option to negotiate the terms of an exclusive or nonexclusive commercialization license to subject inventions arising under the CRADA.

ADDRESSES: Proposals and questions about this CRADA opportunity may be addressed to Mr. Kevin Brand, Technology Development & Commercialization Branch, National Cancer Institute—Frederick Cancer Research and Development Center, Fairview Center, 1003 West Seventh Street, Room 502, Frederick, MD 21701, Telephone: (301) 846–5222; Facsimile: (301) 846–6820.

EFFECTIVE DATE: Organizations must submit a proposal summary, of one page or less, to NCI. Proposal review by NCI will begin on or before October 16, 2000. However, proposals will be accepted until appropriate collaborator(s) are found. Guidelines for preparing full CRADA proposals will be communicated to all respondents with whom initial discussions will have established sufficient mutual interest.

SUPPLEMENTARY INFORMATION:

Technology Available

The National Cancer Institute (NCI) of the National Institutes of Health (NIH) has a pending patent application relating to a molecular computing device. This device will act in a manner analogous to those of electronic-based computers, such as by way of flip-flops, AND gates, etc. Coupling of the gates allows for molecular computing. The method allows for data storage, the transformation of binary information, and signal readout. Possibilities include encoding ''read only'' memory for microscopic identifiers, digital control of gene expression, and quantification of analytes. The computing elements also provide means for complex regulation of gene expression. The NCI, in accordance with the regulations governing the transfer of agents which the Government has taken an active role in developing (37 CFR 404.8), is seeking a biotechnology and/or silicon-based technology company which can assist in the development of this prototype as described in the patent which is pending. Those potential collaborators interested in reviewing NCI's pending patent application on this technology should contact J.P. Kim at the National Institutes of Health, Office of Technology Transfer, 6011 Executive Boulevard, Suite 325, Rockville, Maryland 20852, Telephone (301) 496–7056; Facsimile (301) 496–0220.

The role of the National Cancer Institute in this CRADA may include, but not be limited to:

1. Providing intellectual, scientific, and technical expertise and experience related to the development of a prototype molecular computer.
2. Providing access to confidential information relating to the pending patent application.
3. Planning research studies and interpreting research results.
4. Publishing research results.

The role of the CRADA Collaborator may include, but not be limited to:

1. Providing significant intellectual, scientific, and technical expertise or experience to the development of a prototype molecular-based computing device, particularly in the area of genetic engineering and/or silicon micromachining.
2. Planning research studies and interpreting research results.
3. Publishing research results.

Selection criteria for choosing the CRADA Collaborator may include, but not be limited to:

1. The ability to collaborate with NCI can be demonstrated through experience and expertise in this or related areas of technology indicating the ability to contribute intellectually to ongoing research and development.
2. The demonstration of adequate resources to perform the research and development of this technology (*e.g.* facilities, personnel and expertise) and accomplish objectives according to an appropriate timetable to be outlined in the CRADA Collaborator's proposal.
3. The willingness to commit best effort and demonstrated resources to the research and development of this technology, as outlined in the CRADA Collaborator's proposal.
4. The demonstration of expertise in the commercial development and production of products related to this area of technology.
5. The level of financial support the CRADA Collaborator will provide for CRADA-related Government activities.
6. The willingness to cooperate with the National Cancer Institute in the timely publication of research results.
7. The agreement to be bound by the appropriate DHHS regulations relating to human subjects, and all PHS policies relating to the use and care of laboratory animals.
8. The willingness to accept the legal provisions and language of the CRADA

with only minor modification, if any. These provisions govern the distribution of patent rights to CRADA inventions. Generally, the rights of ownership are retained by the organization that is the employer of the inventor, with (1) the grant of a license for research and other Government purposes to the Government when the CRADA Collaborator's employee is the sole inventor, or (2) the grant of an option to elect an exclusive or nonexclusive license to the CRADA Collaborator when the Government employee is the sole inventor.

Dated: September 3, 2000.

Kathleen Sybert,

Branch Chief, Technology Development & Commercialization Branch, National Cancer Institute, National Institutes of Health.

[FR Doc. 00–23671 Filed 9–13–00; 8:45 am]

BILLING CODE 4140–01–P

DEPARTMENT OF HEALTH AND HUMAN SERVICES

National Institutes of Health

Office of the Director, National Institutes of Health; Notice of Meeting

Pursuant to section 10(a) of the Federal Advisory Committee Act, as amended (5 U.S.C. Appendix 2), notice is hereby given of a meeting of the Advisory Committee on Research on Minority Health.

The meeting will be open to the public, with attendance limited to space available. Individuals who plan to attend and need special assistance, such as sign language interpretation or other reasonable accommodations, should notify the Contact Person listed below in advance of the meeting.

Name of Committee: Advisory Committee on Research on Minority Health.

Date: September 15, 2000.

Time: 8:30 AM to 5 PM.

Agenda: Agenda items include: (1) a report by the Associate Director, ORMH; (2) presentation by CHORI; (3) report of the Committee Chair; and (4) other business of the Committee.

Place: Children's Hospital Oakland Research Institute, 5700 Martin Luther King Jr. Way, Oakland, CA.

Contact Person: Jean L. Flagg-Newton, Special Assistant to the Associate Director, Office of Research on Minority Health, National Institutes of Health, Building 1, Room 256, 9000 Rockville Pike, Bethesda, MD 20892, (301) 402–2518.

This meeting is being published less than 15 days prior to the meeting due to scheduling conflicts.

(Catalogue of Federal Domestic Assistance Program Nos. 93.14, Intramural Research Training Award; 93.187, Undergraduate Scholarship Program for individuals from Disadvantaged Backgrounds; 93.22, Clinical Research Loan Repayment Program for Individuals from Disadvantaged Backgrounds; 93.232, Loan Repayment Program for Research Generally; 93.39, Academic Research Enhancement Award; 93.936, NIH Acquired Immunodeficiency Syndrome Research Loan Repayment Program, National Institutes of Health, HHS)

Dated: September 7, 2000.

LaVerne Y. Stringfield,

Director, Office of Federal Advisory Committee Policy.

[FR Doc. 00–23669 Filed 9–13–00; 8:45 am]

BILLING CODE 4140–01–M

DEPARTMENT OF HEALTH AND HUMAN SERVICES

National Institutes of Health

National Institute on Alcohol Abuse and Alcoholism; Amended Notice of Meeting

Notice is hereby given of a change in the meeting of the Health Services Research Review Subcommittee, October 19, 2000, 8:30 am to October 19, 2000, 5:30 pm, American Inn, 8130 Wisconsin Avenue, Bethesda, MD, 20814 which was published in the **Federal Register** on August 17, 2000, FR 65 50210.

The meeting will be held at the Courtyard By Marriott, 805 Russell Avenue, Gaithersburg, MD 20879 on October 19, 2000. Published in **Federal Register** Volume 65, Number 160, page 50210. The meeting is closed to the public.

Dated: September 5, 2000.

LaVerne Y. Stringfield,

Director, Office of Federal Advisory Committee Policy.

[FR Doc. 00–23665 Filed 9–13–00; 8:45 am]

BILLING CODE 4140–01–M

DEPARTMENT OF HEALTH AND HUMAN SERVICES

National Institutes of Health

National Institute on Alcohol Abuse and Alcoholism; Notice of Closed Meeting

Pursuant to section 10(d) of the Federal Advisory Committee Act, as amended (5 U.S.C. Appendix 2), notice is hereby given of the following meeting.

The meeting will be closed to the public in accordance with the provisions set forth in sections 552b(c)(4) and 552b(c)(6), Title 5 U.S.C., as amended. The grant applications and the discussions could disclose confidential trade secrets or commercial property such as patentable material, and personal information concerning individuals associated with the grant applications, the disclosure of which would constitute a clearly unwarranted invasion of personal privacy.

Name of Committee: National Institute on Alcohol Abuse and Alcoholism Special Emphasis Panel.

Date: September 26, 2000.

Time: 10 a.m. to 12 p.m.

Agenda: To review and evaluate grant applications.

Place: 6000 Executive Boulevard, Suite 409, Rockville, MD 20852, (Telephone Conference Call).

Contact Person: Ronald Suddendorf, Scientific Review Administrator, Extramural Project Review Branch, National Institute on Alcohol Abuse and Alcoholism, National Institutes of Health, Suite 409, 6000 Executive Boulevard, Bethesda, MD 20892–7003, 301–443–2926.

(Catalogue of Federal Domestic Assistance Program Nos. 93.271, Alcohol Research Career Development Awards for Scientists and Clinicians; 93.272, Alcohol National Research Service Awards for Research Training; 93.273, Alcohol Research Programs; 93.891, Alcohol Research Center Grants, National Institutes of Health, HHS)

Dated: September 5, 2000.

LaVerne Y. Stringfield,

Director, Office of Federal Advisory Committee Policy.

[FR Doc. 00–23664 Filed 9–13–00; 8:45 am]

BILLING CODE 4140–01–M

DEPARTMENT OF HEALTH AND HUMAN SERVICES

National Institutes of Health

National Institute of Dental & Craniofacial Research; Notice of Closed Meetings

Pursuant to section 10(d) of the Federal Advisory Committee Act, as amended (5 U.S.C. Appendix 2), notice is hereby given of the following meetings.

The meetings will be closed to the public in accordance with the provisions set forth in sections 552b(c)(6), Title 5 U.S.C., as amended. The grant applications and the discussions could disclose confidential trade secrets or commercial property such as patentable material, and personal information concerning individuals associated with grant applications, the disclosure of which would constitute a clearly unwarranted invasion of personal privacy.

Name of Committee: National Institute of Dental and Craniofacial Research Special Emphasis Panel, 87–00, Review of R01s.

Date: September 18, 2000.

Time: 10 a.m. to 11:30 a.m.
Agenda: To review and evaluate grant applications.
Place: Natcher Building, Rm. 4AN44F, Bethesda, MD 20892, (Telephone Conference Call).
Contact Person: Anna Sandberg, Scientific Review Administrator, National Institute of Dental & Craniofacial Res., 45 Center Drive, Natcher Building, Rm. 4AN44F, Bethesda, MD 20892, (301) 594–3089.

Name of Committee: National Institute of Dental and Craniofacial Research Special Emphasis Panel, 90–00, Review of R13 Grants.
Date: September 20, 2000.
Time: 11 a.m. to 1 p.m.
Agenda: To review and evaluate grant applications.
Place: 45 Center Drive, Bethesda, MD 20892, (Telephone Conference Call).
Contact Person: H. George Hausch, Chief, 4500 Center Drive, Natcher Building, Rm. 4AN44F, National Institutes of Health, Bethesda, MD 20892, (301) 594–2372.

Name of Committee: National Institute of Dental and Craniofacial Research Special Emphasis Panel, 00–84, Review of P60 Grants.
Date: September 26, 2000.
Time: 1 p.m. to 2:30 p.m.
Agenda: To review and evaluate grant applications.
Place: 45 Center Drive, Bethesda, MD 20892, (Telephone Conference Call).
Contact Person: Yujing Liu, MD, Scientific Review Administrator, National Institute of Dental & Craniofacial Res., 45 Center Drive, Natcher Building, Rm. 4AN44F, National Institutes of Health, Bethesda, MD 20892, (301) 594–2372.

Name of Committee: National Institute of Dental and Craniofacial Research Special Emphasis Panel, 00–83, Review of P01 Grants.
Date: September 26, 2000.
Time: 3 p.m. to 4:30 p.m.
Agenda: To review and evaluate grant applications.
Place: 45 Natcher Bldg, Rm 5As.25u, Bethesda, MD 20892, (Telephone Conference Call).
Contact Person: Yujing Liu, MD, Scientific Review Administrator, National Institute of Dental & Craniofacial Res., 45 Center Drive, Natcher Building, Rm. 4AN44F, National Institutes of Health, Bethesda, MD 20892, (301) 594–2372.

Name of Committee: National Institute of Dental and Craniofacial Research Special Emphasis Panel.
Date: September 27, 2000.
Time: 10 a.m. to 11:30 a.m.
Agenda: To review and evaluate grant applications.
Place: 45 Center Drive, Bethesda, MD 20892, (Telephone Conference Call).
Contact Person: Philip Washko, Scientific Review Administrator, 45 Center Drive, Natcher Building, Rm. 4AN44F, National Institutes of Health, Bethesda, MD 20892, (301) 594–2372.

(Catalogue of Federal Domestic Assistance Program Nos. 93.121, Oral Diseases and Disorders Research, National Institutes of Health, HHS)

Dated: September 5, 2000.

LaVerne Y. Stringfield,

Director, Office of Federal Advisory Committee Policy.

[FR Doc. 00–23666 Filed 9–13–00; 8:45 am]

BILLING CODE 4140–01–M

DEPARTMENT OF HEALTH AND HUMAN SERVICES

National Institutes of Health

National Institute on Aging; Notice of Closed Meetings

Pursuant to section 10(d) of the Federal Advisory Committee Act, as amended (5 U.S.C. Appendix 2), notice is hereby given of the following meetings.

The meeting will be closed to the public in accordance with the provisions set forth in sections 552b(c)(4) and 552b(c)(6), Title 5 U.S.C., as amended. The grant applications and the discussions could disclose confidential trade secrets or commercial property such as patentable material, and personal information concerning individuals associated with the grant applications, the disclosure of which would constitute a clearly unwarranted invasion of personal privacy.

Name of Committee: National Institute on Aging Special Emphasis Panel, Review of Behavioral and Neural Plasticity in the Aged application.
Date: October 3, 2000.
Time: 1 p.m. to 4 p.m.
Agenda: To review and evaluate grant applications.
Place: 7201 Wisconsin Avenue, Bethesda, MD 20892, (Telephone Conference Call).
Contact Person: Louise L. Hsu, Scientific Review Administrator, The Bethesda Gateway Building, 7201 Wisconsin Avenue/Suite 2C212, Bethesda, MD 20892, (301) 496–9666.

Name of Committee: National Institute on Aging Special Emphasis Panel.
Date: October 5–6, 2000.
Time: 7 a.m. to 4 p.m.
Agenda: To review and evaluate grant applications.
Place: Bethesda Marriot, 5151 Pooks Hill Road, Bethesda, MD 20814.
Contact Person: Ramesh Vemuri, Office of Scientific Review, National Institute on Aging, The Bethesda Gateway Building, 7201 Wisconsin Avenue, Suite 2C212, Bethesda, MD 20892, (301) 496–9666.

Name of Committee: National Institute on Aging Initial Review Group, Biological Aging Review Committee.
Date: October 8–9, 2000.
Time: 6 a.m. to 4 p.m.
Agenda: To review and evaluate grant applications.
Place: Chevy Chase Holiday Inn, 5520 Wisconsin Ave., Chevy Chase, MD 20815.
Contact Person: James P. Harwood, Deputy Chief, Scientific Review Office, The Bethesda Gateway Building, 7201 Wisconsin Avenue/Suite 2C212, Bethesda, MD 20892, (301) 496–9666.

Name of Committee: National Institute on Aging Special Emphasis Panel, Alzheimer's Disease Pilot Clinical Trial.
Date: October 10, 2000.
Time: 1 p.m. to 3 p.m.
Agenda: To review and evaluate grant applications.
Place: 7201 Wisconsin Avenue, Bethesda, MD 20892, (Telephone Conference Call).
Contact Person: Ramesh Vemuri, Scientific Review Administrator, Office of Scientific Review, National Institute on Aging, The Bethesda Gateway Building, 7201 Wisconsin Avenue, Suite 2C212, Bethesda, MD 20892, (301) 496–9666.

Name of Committee: National Institute on Aging Initial Review Group, Sociology Aging Review Committee.
Date: October 12–13, 2000.
Time: 8:30 a.m. to 5 p.m.
Agenda: To review and evaluate grant applications.
Place: Bethesda Holiday Inn, 8120 Wisconsin Avenue, Bethesda, MD 20814.
Contact Person: Mary Ann Ann Guadagno, Scientific Review Administrator, The Bethesda Gateway Building, 7201 Wisconsin Avenue/Suite 2C212, Bethesda, MD 20892, (301) 496–9666.

Name of Committee: National Institute on Aging Special Emphasis Panel.
Date: October 16, 2000.
Time: 10 a.m. to 12:30 p.m.
Agenda: To review and evaluate grant applications.
Place: 7201 Wisconsin Avenue, Bethesda, MD 20892, (Telephone Conference Call).
Contact Person: Wiliam A. Kachadorian, The Bethesda Gateway Building, 7201 Wisconsin Avenue/Suite 2C212, Bethesda, MD 20892, (301) 496–9666.

Name of Committee: National Institute on Aging Initial Review Group, Clinical Aging Review Committee.
Date: October 19–20, 2000.
Time: 7 p.m. to 5 p.m.
Agenda: To review and evaluate grant applications.
Place: Marriott Pooks Hill, 5151 Pooks Hill Road, Bethesda, MD 20814.
Contact Person: William A. Kachadorian, Scientific Review Administrator, The Bethesda Gateway Building, 7201 Wisconsin Avenue/Suite 2C212, Bethesda, MD 20892, (301) 496–9666.

Name of Committee: National Institute on Aging Initial Review Group, Neuroscience of Aging Review Committee.
Date: November 13–14, 2000.
Time: 6 p.m. to 4:30 p.m.
Agenda: To review and evaluate grant applications.
Place: Holiday Inn, 5520 Wisconsin Avenue, Chevy Chase, MD 20815.
Contact Person: Louise L. Hsu, The Bethesda Gateway Building, 7201 Wisconsin Avenue/Suite 2C212, Bethesda, MD 20892, (301) 496–9666.

(Catalogue of Federal Domestic Assistance Program Nos. 93.866, Aging Research, National Institutes of Health, HHS)

Dated: September 6, 2000.

LaVerne Y. Stringfield,

Director, Office of Federal Advisory Committee Policy.

[FR Doc. 00–23667 Filed 9–13–00; 8:45 am]

BILLING CODE 4140–01–M

DEPARTMENT OF HEALTH AND HUMAN SERVICES

National Institutes of Health

National Library of Medicine; Notice of Meeting

Pursuant to section 10(d) of the Federal Advisory Committee Act, as amended (5 U.S.C. Appendix 2), notice is hereby given of the following meeting.

The meeting will be open to the public as indicated below, with attendance limited to space available. Individuals who plan to attend and need special assistance, such as sign language interpretation or other reasonable accommodations, should notify the Contact Person listed below in advance of the meeting.

The portions of the meeting devoted to the review and evaluation of journals for potential indexing by the National Library of Medicine will be closed to the public in accordance with the provisions set forth in section 552b(c)(9)(B), Title 5 U.S.C., as amended. Premature disclosure of the titles of the journals as potential titles to be indexed by the National Library of Medicine, the discussions, and the presence of individuals associated with these publications could significantly frustrate the review and evaluation of individual journals.

Name of Committee: Literature Selection Technical Review Committee.

Date: October 26–27, 2000.

Open: October 26, 2000, 9 a.m. to 11 a.m.

Agenda: Administrative reports and program developments.

Place: National Library of Medicine, 8600 Rockville Pike, Board Room, Bethesda, MD 20894.

Closed: October 26, 2000, 11 a.m. to 5 p.m.

Agenda: To review and evaluation journals as potential titles to be indexed by the National Library of Medicine.

Place: National Library of Medicine, 8600 Rockville Pike, Board Room, Bethesda, MD 20894.

Closed: October 27, 2000, 8:30 a.m. to 12:30 p.m.

Agenda: To review and evaluate journals as potential titles to be indexed by the National Library of Medicine.

Place: National Library of Medicine, 8600 Rockville Pike, Board Room, Bethesda, MD 20894.

Contact Person: Sheldon Kotzin, Chief, Bibliographic Services Division, Division of Library Operations, National Library of Medicine, 8600 Rockville Pike, Bldg, 38A/Room 4N419, Bethesda, MD 20894.

(Catalogue of Federal Domestic Assistance Program Nos. 93.879, Medical Library Assistance, National Institutes of Health, HHS)

Dated: September 6, 2000.

Anna P. Snouffer,

Acting Director, Office of Federal Advisory Committee Policy.

[FR Doc. 00–23668 Filed 9–13–00; 8:45 am]

BILLING CODE 4140–01–M

DEPARTMENT OF THE INTERIOR

Performance Review Board Appointments

AGENCY: Department of the Interior.

ACTION: Notice of performance review board appointments.

SUMMARY: This notice provides the names of individuals who have been appointed to serve as members of the Department of the Interior Performance Review Board.

DATES: These appointments are effective on September 14, 2000.

FOR FURTHER INFORMATION CONTACT: Carolyn Cohen, Director of Personnel Policy, Office of the Secretary, Department of the Interior, 1849 C Street, NW., Washington, DC 20240, Telephone Number: (202) 208–6761.

2000 SES Performance Review Board

The following Senior Executive Service members have been appointed to serve on the Department of the Interior 2000 Performance Review Board:

E. Melodee Stith, Office of the Assistant Secretary—Policy, Management and Budget
Willie R. Taylor, Office of the Assistant Secretary—Policy, Management and Budget
Carolyn Cohen, Office of the Assistant Secretary—Policy, Management and Budget
William D. Bettenberg, Office of the Assistant Secretary—Policy, Management and Budget
Dolores L. Chacon, Office of the Assistant Secretary—Policy, Management and Budget
Debra Sonderman, Office of the Assistant Secretary—Policy, Management and Budget
Gina Guy, Office of the Solicitor
Denise E. Sheehan, Fish and Wildlife Service
J. Lynn Smith, National Park Service
Jerry Belson, National Park Service
Kathryn R. Clement, U.S. Geological Survey
Barbara J. Ryan, U.S. Geological Survey
Carmen R. Maymi, Bureau of Reclamation
Margaret W. Sibley, Bureau of Reclamation
Robert W. Johnson, Bureau of Reclamation
Thomas A. Readinger, Minerals Management Service
Robert E. Brown, Minerals Management Service
Robert J. Ewing, Office of Surface Mining
W. Hord Tipton, III, Bureau of Land Management
Dominic A. Nessi, Office of the Assistant Secretary—Indian Affairs

Dated: September 7, 2000.

Carolyn Cohen,

Director of Personnel Policy.

[FR Doc. 00–23634 Filed 9–13–00; 8:45 am]

BILLING CODE 4310–10–M

DEPARTMENT OF THE INTERIOR

Bureau of Land Management

[NV–910–00–0777–30]

Northeastern Great Basin Resource Advisory Council Meeting Location and Time

August 31, 2000.

AGENCY: Bureau of Land Management, Interior.

ACTION: Resource Advisory Council's Meeting Location and Time.

SUMMARY: In accordance with the Federal Land Policy and Management Act and the Federal Advisory Committee Act of 1972 (FACA), 5 U.S.C., the Department of the Interior, Bureau of Land Management (BLM), Council meetings will be held as indicated below. The agenda for this meeting includes: approval of minutes of the previous meetings, wild horses, sage grouse, Great Basin Restoration Initiative, Off-Highway Vehicles, budget, emergency fire rehabilitation, Field Manager reports, identification of additional issues to be resolved and determination of the subject matter for future meetings. A field trip is also scheduled for the second day.

All meetings are open to the public. The public may present written comments to the Council. Each formal Council meeting will also have time allocated for hearing public comments. The public comment period for the Council meeting is listed below. Depending on the number of persons wishing to comment and time available,

the time for individual oral comments may be limited. Individuals who plan to attend and need special assistance, such as sign language interpretation, tour transportation or other reasonable accommodations, should contact the BLM as provided below.

DATES, TIMES, PLACE: The time and location of the meeting is as follows: Northeastern Great Basin Resource Advisory Council, Battle Mountain Field Office, 50 Bastian Road, Battle Mountain, Nevada, 89820; September 28 starting at 9 a.m.; public comments will be at 11 a.m.. and 3 p.m.; tentative adjournment at 5 p.m. Field trip to Tosawihi Quarry on September 29 starting at 9 a.m.

FOR FURTHER INFORMATION CONTACT: Susan Howle, Environmental Coordinator, Ely Field Office, 702 North Industrial Way, HC 33 Box 33500, Ely, NV 89301–9408, telephone 775–289–1873.

SUPPLEMENTARY INFORMATION: The purpose of the Council is to advise the Secretary of the Interior, through the BLM, on a variety of planning and management issues, associated with the management of the public lands.

Helen Hankins,

Field Office Manager, Elko Field Office.

[FR Doc. 00–23557 Filed 9–13–00; 8:45 am]

BILLING CODE 4310–HC–M

DEPARTMENT OF THE INTERIOR

Bureau of Land Management

[WY–920–1310–01; WYW129067]

Notice of Proposed Reinstatement of Terminated Oil and Gas Lease

September 8, 2000.

Pursuant to the provisions of 30 U.S.C. 188(d) and (e), and 43 CFR 3108.2–3(a) and (b)(1), a petition for reinstatement of oil and gas lease WYW129067 for lands in Fremont County, Wyoming, was timely filed and was accompanied by all the required rentals accruing from the date of termination. The lessee has agreed to the amended lease terms for rentals and royalties at rates of $10.00 per acre, or fraction thereof, per year and 16–⅔ percent, respectively. The lessee has paid the required $500 administrative fee and $125 to reimburse the Department for the cost of this **Federal Register** notice. The lessee has met all the requirements for reinstatement of the lease as set out in Section 31(d) and (e) of the Mineral Lands Leasing Act of 1920 (30 U.S.C. 188), and the Bureau of Land Management is proposing to reinstate lease WYW129067 effective May 1, 2000, subject to the original terms and conditions of the lease and the increased rental and royalty rates cited above.

Mavis Love,

Acting Chief, Leasable Minerals Section.

[FR Doc. 00–23627 Filed 9–13–00; 8:45 am]

BILLING CODE 4310–22–M

DEPARTMENT OF THE INTERIOR

Bureau of Land Management

[CA–940–01–5410–10–B131; CACA 42186]

Conveyance of Mineral Interests in California

AGENCY: Bureau of Land Management, Interior.

ACTION: Notice of segregation.

SUMMARY: The private land described in this notice, aggregating 320 acres, is segregated and made unavailable for filings under the general mining laws and the mineral leasing laws to determine its suitability for conveyance of the reserved mineral interest pursuant to section 209 of the Federal Land Policy and Management Act of October 21, 1976.

The mineral interests will be conveyed in whole or in part upon favorable mineral examination.

The purpose is to allow consolidation of surface and subsurface of minerals ownership where there are no known mineral values or in those instances where the reservation interferes with or precludes appropriate nonmineral development and such development is a more beneficial use of the land than the mineral development.

FOR FURTHER INFORMATION CONTACT: Kathy Gary, California State Office, Federal Office Building, 2800 Cottage Way, Room W–1928, Sacramento, California 95825, (916) 978–4677.

Serial No. CACA 42186

T. 29 S., R. 29 E., Mount Diablo Meridian
Sec. 10, S½.
County-Kern
Minerals Reservation—All coal and other minerals.

Upon publication of this Notice of Segregation in the **Federal Register** as provided in 43 CFR 2720.1–1(b), the mineral interests owned by the United States in the private lands covered by the application shall be segregated to the extent that they will not be subject to appropriation under the mining and mineral leasing laws. The segregative effect of the application shall terminate by publication of an opening order in the **Federal Register** specifying the date and time of opening; upon issuance of a patent or other document of conveyance to such mineral interest; or two years from the date of publication of this notice, whichever occurs first.

David McIlnay,

Chief, Lands Section.

[FR Doc. 00–23626 Filed 9–13–00; 8:45 am]

BILLING CODE 4310–40–P

DEPARTMENT OF THE INTERIOR

Minerals Management Service

RIN 1010–AB57

Major Portion Prices and Due Dates for Additional Royalty Payments on Indian Gas Production in Designated Areas Not Associated With an Index Zone

AGENCY: Minerals Management Service (MMS), Interior.

ACTION: Notice of major portion prices.

SUMMARY: Final regulations for valuing gas produced from Indian leases, published on August 10, 1999, require MMS to determine major portion values and notify industry by publishing the values in the **Federal Register**. The regulations also require MMS to publish a due date for industry to pay additional royalty based on the major portion value. This notice provides the major portion values and due dates for March and April 2000 production months.

EFFECTIVE DATES: January 1, 2000.

ADDRESSES: See **FOR FURTHER INFORMATION CONTACT** section below.

FOR FURTHER INFORMATION CONTACT: John Barder, Royalty Valuation Division, MMS; telephone, (303) 275–7234; FAX, (303) 275–7227; E-mail, John.Barder@mms.gov, mailing address, Minerals Management Service, Royalty Management Program, Royalty Valuation Division, P.O. Box 25165, MS 3152, Denver, Colorado 80225–0165.

SUPPLEMENTARY INFORMATION: On August 10, 1999, MMS published a final rule titled ''Amendments to Gas Valuation Regulations for Indian Leases,'' with an effective date of January 1, 2000 (64 FR 43506). The gas regulations apply to all gas production from Indian (tribal or allotted) oil and gas leases (except leases on the Osage Indian Reservation).

The rule requires that MMS publish major portion prices for each designated area not associated with an index zone for each production month beginning January 2000 along with a due date for additional royalty payments. See 30 CFR 206.174(a)(4)(ii) (64 FR 43520, August 10, 1999). If additional royalties are due based on a published major

portion price, the lessee must submit an amended Form MMS–2014, Report of Sales and Royalty Remittance, to MMS by the due date. If additional royalties are not paid by the due date, late payment interest under 30 CFR 218.54 (1999) will accrue from the due date until payment is made and an amended Form MMS–2014 is received. The table below lists the major portion prices for all designated areas not associated with an index zone and the due date for payment of additional royalties.

GAS MAJOR PORTION PRICES AND DUE DATES FOR DESIGNATED AREAS NOT ASSOCIATED WITH AN INDEX ZONE

MMS–Designated Areas	March 2000 (in MMBtu)	April 2000 (in MMBtu)	Due date
Blackfeet Reservation	$1.85	$2.16	10/31/2000
Fort Belknap	3.89	3.97	10/31/2000
Fort Berthold	0.98	1.17	10/31/2000
Fort Peck Reservation	1.66	1.83	10/31/2000
Navajo Allotted Leases in the Navajo Reservation	2.39	2.73	10/31/2000
Rocky Boys Reservation	1.34	1.92	10/31/2000
Turtle Mountain Reservation	1.27	1.18	10/31/2000
Ute Allotted Leases in the Uintah and Ouray Reservation	2.40	2.67	10/31/2000
Ute Tribal Leases in the Uintah and Ouray Reservation	2.40	2.67	10/31/2000

For information on how to report additional royalties due to major portion prices, please refer to our Dear Payor letter dated December 1, 1999.

Dated: September 8, 2000.

R. Dale Fazio,

Acting Associate Director for Royalty Management.

[FR Doc. 00–23551 Filed 9–13–00; 8:45 am]

BILLING CODE 4310–MR–P

JUDICIAL REVIEW COMMISSION ON FOREIGN ASSET CONTROL

Review of Laws and Judicial Precedents Relating to the Blocking of Assets of Foreign Persons by the United States Government, and Examination and Evaluation of Remedies Available to United States Persons Affected by the Blocking of Such Assets

AGENCY: Judicial Review Commission on Foreign Asset Control.

ACTION: Scheduling of public hearings, and notice of opportunity to submit comments.

SUMMARY: The Judicial Review Commission on Foreign Asset Control (''Commission'') will hold public hearings in connection with its statutory mandate under the Foreign Narcotics Kingpin Designation Act (''Narcotics Kingpin Act'') on September 21–22 and October 2–3, 2000. Under the Narcotics Kingpin Act, the Commission is required to conduct ''a review of the current judicial, regulatory, and administrative authorities relating to the blocking of assets of foreign persons by the United States Government,'' and ''a detailed examination and evaluation of the remedies available to United States persons affected by the blocking of assets of foreign persons by the United States Government.'' In addition to the public hearings, the Commission invites interested parties to submit written statements regarding the matters under review by the Commission.

DATES: September 21–22 and October 2–3, 2000.

FOR FURTHER INFORMATION CONTACT: David H. Laufman, Staff Director & Deputy Chief Counsel, Judicial Review Commission on Foreign Asset Control, at (202) 305–1590, or by e-mail at david.laufman@usdoj.gov.

SUPPLEMENTARY INFORMATION:

Background

The Commission was established pursuant to Title VIII of the Foreign Narcotics Kingpin Designation Act (Pub. L. 106–120), which was enacted in December 1999 as part of the Intelligence Authorization Act for Fiscal Year 2000 (''Act''). Section 804 of the Act requires the President to publicly designate certain foreign persons as ''significant foreign narcotics traffickers,'' and section 805(b) of the Act requires the blocking of all property and interests in property owned or controlled by such designated traffickers and certain other foreign persons designated by the Secretary of the Treasury. In addition, section 805(c) of the Act prohibits ''[a]ny transaction or dealing by a United States person, or within the United States, in property or interests in property of any significant narcotics trafficker * * * and foreign persons designated by the Secretary of the Treasury * * * ''

Of particular significance to the Commission's work is section 805(f) of the Act, which states that ''[t]he determinations, identifications, findings and designations made pursuant to section 804 and subsection (b) of [section 805] *shall not be subject to judicial review.*'' (Emphasis added.)

Under section 810(c) of the Act, the Commission is required to conduct (1) ''a review of the current judicial, regulatory, and administrative authorities relating to the blocking of assets of foreign persons by the United States Government''; and (2) ''a detailed examination and evaluation of the remedies available to United States persons affected by the blocking of assets of foreign persons by the United States Government.''

In addition to this statutory mandate, Congress instructed the Commission, in the Conference Report that accompanied final passage of the Act, ''to examine and report on at least the following constitutional and other issues:

(1) Whether reasonable protections of innocent U.S. businesses are available under the regime currently in place that is utilized to carry out the provisions of the International Emergency Economic Powers Act (''IEEPA'');

(2) whether advance notice prior to blocking of one's assets is required as a matter of constitutional due process;

(3) whether there are reasonable opportunities under the current IEEPA regulatory regime and the Administrative Procedures Act for an erroneous blocking of assets or mistaken listing under IEEPA to be remedied;

(4) whether the level of proof that is required under the current judicial, regulatory, or administrative scheme is adequate to protect legitimate business interests from irreparable financial harm;

(5) whether there is constitutionally adequate accessibility to the courts to challenge agency actions under IEEPA, or the designation of persons or entities under IEEPA;

(6) whether there are remedial measures and legislative amendments

that should be enacted to improve the current asset blocking scheme under IEEPA or [the Foreign Narcotics Kingpin Designation Act]; and

(7) whether the resources made available for the Office of Foreign Assets Control (''OFAC'') at the Department of Treasury in the fiscal year 2001 budget submission are adequate to carry out the provisions of this title or the other programs currently in effect under IEEPA.''

The Commission is required by statute to submit a final report to Congress by early December 2000.

Public Hearings

As part of the fact-finding undertaken to fulfill its legislative mandate, and pursuant to 21 U.S.C. 1908(d)(1), the Commission will hold public hearings on September 21–22 and October 2–3, 2000. The hearings on September 21 will be held in Room 2255 of the Rayburn House Office Building in Washington, D.C., located on Independence Avenue across from the U.S. Capitol, beginning at 9:30 a.m. The hearings on September 22 will be held in Room 2200 of the Rayburn House Office Building, beginning at 9:30 a.m. The hearings on October 2–3 will be held in Room 216 of the Senate Hart Office Building, located at 2nd St. and Constitution Avenue, N.E., Washington, DC, beginning at 9:30 a.m.

Written Submissions

Interested persons are invited to submit written statements concerning the matters before the Commission, which, in the Commission's discretion, may be included in its report to Congress. All written submissions should be submitted at the earliest practicable date but must be submitted by 5 p.m. on October 31, 2000. All submissions should be addressed to Larry D. Thompson, Chairman, Judicial Review Commission on Foreign Asset Control, Suite 700, 1331 F. St., NW., Washington, DC 20530.

David H. Laufman,

Staff Director & Deputy Chief Counsel.

[FR Doc. 00–23765 Filed 9–13–00; 8:45 am]

BILLING CODE 4410–AR–P

DEPARTMENT OF JUSTICE

Drug Enforcement Administration

Importer of Controlled Substances; Notice of Withdrawal

As set forth in the **Federal Register** (FR Doc. 99–21588) Vol. 64, No. 161 at page 45565, dated August 20, 1999, Morton Grove Pharmaceuticals, Inc., 6451 W. Main Street, Morton Grove, Illinois 60053, made application to the Drug Enforcement Administration for registration as an importer of codeine (9050).

Two registered bulk manufacturers of codeine requested a hearing to deny the proposed registration of Morton Grove Pharmaceuticals. Morton Grove Pharmaceuticals requested by letter that its application be withdrawn. Therefore, Morton Grove Pharmaceuticals' application to import codeine is hereby withdrawn.

Dated: August 21, 2000.

John H. King,

Deputy Assistant Administrator, Office of Diversion Control, Drug Enforcement Administration.

[FR Doc. 00–23621 Filed 9–13–00; 8:45 am]

BILLING CODE 4410–09–M

DEPARTMENT OF JUSTICE

Federal Bureau of Investigation

Notice of Meeting

AGENCY: Department of Justice, Federal Bureau of Investigation, National Domestic Preparedness Office (NDPO), State and Local Advisory Group to the NDPO.

ACTION: Committee Management; Notice of Meeting.

Authority: Title 5, United States Code, Appendix 2.

SUMMARY: The State and Local Advisory Group to the NDPO will meet on September 26–27, 2000, at the Radisson Hotel—Old Town, 901 N. Fairfax Street, Alexandria, Virginia. The meeting will start at 9:00 a.m. and end at approximately 5:00 p.m. on each day. Agenda items to be addressed include: Federal ethics and conflict of interest laws as they relate to federal advisory committees; A review of the Advisory Group charter and a discussion of the proposed bylaws; An overview of current NDPO initiatives; Roundtable discussion regarding state and local domestic preparedness priorities, the recommended priorities of federal preparedness programs to assist the state and local agencies, and the nexus between the two; Briefing and discussion on the draft Plan to Support State and Local WMD Preparedness; Briefing and discussion on the Curriculum Review Panel; A review and discussion of the draft NDPO Planning Guide.

This meeting will be open to the public. Any interested person must register five days in advance of the meeting. Registrations will then be accepted on a space available basis. For information on how to register or to receive a copy of the meeting agenda, contact Ms. Allison Dunham, telephone number (202) 324–9037.

Providing Oral or Written Comments at Advisory Group Meetings: Members of the public who wish to make a brief oral presentation at this meeting, must contact Ms. Allison Dunham, in writing, via fax {(202) 324–2224 or Email *adunham@leo.gov*} no later than noon Eastern time Wednesday, September 20, 2000, in order to have time reserved on the agenda. The notification should contain the requestor's name; corporate designation, consumer affiliation, or government designation; along with a short statement describing the topic to be addressed. In general, for meetings, opportunities for oral comment will usually be limited to no more than five minutes per speaker and no more than thirty minutes total. Written comments (at least 45 copies) received in the NDPO staff office sufficiently prior to a meeting date (usually one week before the meeting), may be mailed to the attention of Mr. Thomas G. Kinnally, Administrator, NDPO. Comments received too close to the meeting date will normally be provided to the Advisory Group at its meeting. Written comments may be provided to the relevant committee or subcommittee up until the time of the meeting.

Responsible FBI Official: Thomas G. Kinnally, Administrator, NDPO.

ADDRESSES: Room 5214, Federal Bureau of Investigation, 935 Pennsylvania Avenue, N.W., Washington, D.C. 20535.

FOR FURTHER INFORMATION CONTACT: Allison R. Dunham, (202) 324–9037.

Dated: September 6, 2000.

Thomas G. Kinnally,

Administrator, NDPO.

[FR Doc. 00–23628 Filed 9–13–00; 8:45 am]

BILLING CODE 4410–02–P

NATIONAL SCIENCE FOUNDATION

Notice of Permit Applications Received Under the Antarctic Conservation Act of 1978 (Pub. L. 95–541)

AGENCY: National Science Foundation.

ACTION: Notice of Permit Applications Received Under the Antarctic Conservation Act of 1978, Pub. L. 95–541.

SUMMARY: The National Science Foundation (NSF) is required to publish notice of permit applications received to conduct activities regulated under the Antarctic Conservation Act of 1978. NSF has published regulations under

the Antarctic Conservation Act at Title 45 Part 670 of the Code of Federal Regulations. This is the required notice of permit applications received.

DATES: Interested parties are invited to submit written data, comments, or views with respect to this permit application by October 17, 2000. Permit applications may be inspected by interested parties at the Permit Office, address below.

ADDRESSES: Comments should be addressed to Permit Office, Room 755, Office of Polar Programs, National Science Foundation, 4201 Wilson Boulevard, Arlington, Virginia 22230.

FOR FURTHER INFORMATION CONTACT: Nadene G. Kennedy at the above address or (703) 292–7405.

SUPPLEMENTARY INFORMATION: The National Science Foundation, as directed by the Antarctic Conservation Act of 1978 (Pub. L. 95–541), has developed regulations that implemented the ''Agreed Measures for the Conservation of Antarctic Fauna and Flora'' for all United States citizens. The Agreed Measures, developed by the Antarctic Treaty Consultative Parties, recommended establishment of a permit system for various activities in Antarctica and designation of certain animals and certain geographic areas a requiring special protection. The regulations establish such a permit system to designee Specially Protected Areas and Sites of Special Scientific Interest.

The applications received are as follows:

1. *Applicant* Maria Stenzel, 5846 Sherier Place, NW., Washington, DC 20016. Permit Application No. 2001–022

Activity for Which Permit Is Requested

Enter Antarctic Specially Protected Areas. The applicant is a photographer on assignment for National Geographic Magazine who plans to photograph Antarctic fauna and flora. The applicant has been in contact with a number of researchers and has made arrangements to cover their specific areas of study. In order to accomplish this the applicant will need to enter the Antarctic Specially Protected Areas where the scientists are conducting their research. No approach to the Specially Protected Areas will be made without the presence of the scientist or a member of his/her field party.

Location

ASPA 113—Litchfield Island, Arthur Harbor, Palmer Archipelago
ASPA 121—Cape Royds, Ross Island
ASPA 124—Cape Crozier, Ross Island
ASPA 128—Western Shore of Admiralty Bay, King George Island
ASPA 139—Biscoe Point, Anvers Island, Palmer Archipelago
ASPA 149—Cape Shireff, Livingston Island, South Shetlands

Dates

October 15, 2000 to February 1, 2001.

Nadene G. Kennedy,

Permit Officer, Office of Polar Programs.

[FR Doc. 00–23684 Filed 9–13–00; 8:45 am]

BILLING CODE 7555–01–M

NUCLEAR REGULATORY COMMISSION

[Docket Nos. 50–461, 50–219, and 50–289]

Amergen Energy Company, LLC, Clinton Power Station, Unit 1, Oyster Creek Nuclear Generating Station, Three Mile Island Nuclear Station, Unit 1; Correction to Notice of Consideration of Approval of Application Regarding Proposed Corporate Restructuring and Opportunity for a Hearing

On August 31, 2000, the **Federal Register** published a notice of consideration of issuance of an order under 10 CFR 50.80 approving the indirect transfer of Facility Operating Licenses Nos. NPF–62 for Clinton Power Station, Unit 1; DPR–16 for the Oyster Creek Nuclear Generating Station; and DPR–50 for the Three Mile Island Nuclear Station, Unit 1, held by AmerGen Energy Company, LLC (AmerGen or the licensee), as the owner and licensed operator. On pages 53036, column 1; 53035, column 1; and 53037, column 1, the following sentence is corrected to read: ''By September 20, 2000, any person whose interest may be affected by the Commission's action on the application may request a hearing and, if not the applicant, may petition for leave to intervene in a hearing proceeding on the Commission's action.''

Dated at Rockville, Maryland, this 8th day of September 2000.

For the Nuclear Regulatory Commission.

Donna M. Skay,

Project Manager, Section 2, Project Directorate III, Division of Licensing Project Management, Office of Nuclear Reactor Regulation.

[FR Doc. 00–23607 Filed 9–13–00; 8:45 am]

BILLING CODE 7590–01–P

NUCLEAR REGULATORY COMMISSION

[Docket No. 50–271]

Amergen Vermont, LLC and Vermont Yankee Nuclear Power Station; Correction to Notice of Consideration of Approval of Proposed Direct and Indirect License Transfers and Opportunity for a Hearing

On August 31, 2000, the **Federal Register** published a notice of consideration of issuance of an order under 10 CFR 50.80 approving the indirect transfer of Facility Operating License No. DPR–28 for Vermont Yankee Nuclear Power Station (Vermont Yankee) currently held by Vermont Yankee Nuclear Power Corporation, as the owner and licensed operator.

On page 53038, column 2, the following sentence is corrected to read: ''By September 20, 2000, any person whose interest may be affected by the Commission's action on the application may request a hearing and, if not the applicant, may petition for leave to intervene in a hearing proceeding on the Commission's action.''

Dated at Rockville, Maryland, this 8th day of September 2000.

For the Nuclear Regulatory Commission.

Donna M. Skay,

Project Manager, Section Project Directorate III, Division of Licensing Project Management, Office of Nuclear Reactor Regulation.

[FR Doc. 00–23608 Filed 9–13–00; 8:45 am]

BILLING CODE 7590–01–P

NUCLEAR REGULATORY COMMISSION

[Docket Nos. STN 50–456, STN 50–457, STN 50–454, STN 50–455, 50–10, 50–237, 50–249, 50–373, 50–374, 50–254, 50–265, 50–295, 50–304]

Commonwealth Edison Company, et al.; Correction to Notice of Consideration of Approval of Application Regarding Proposed Corporate Restructuring and Opportunity for a Hearing

On August 31, 2000, the **Federal Register** published a notice of consideration of issuance of an order under 10 CFR 50.80 approving the indirect transfer of Facility Operating Licenses Nos. NPF–72 and NPF–77 for Braidwood Station, Units 1 and 2; NPF–37 and NPF–66 for Byron Station, Units 1 and 2; DPR–2, DPR–19 and DPR–25 for Dresden Nuclear Power Station, Units 1, 2 and 3; DPR–29 and DPR–30 for Quad Cities Nuclear Power Station, Units 1 and 2; and DPR–39 and DPR–48 for Zion Nuclear Power Station,

Units 1 and 2, currently held by Commonwealth Edison Company (ComEd), as the owner and licensed operator. On pages 53043, column 1; 53044, column 1; 53039, column 2; 53040, column 2; 53041, column 2; and 53042, column 1, the following sentence is corrected to read: ''By September 20, 2000, any person whose interest may be affected by the Commission's action on the application may request a hearing and, if not the applicant, may petition for leave to intervene in a hearing proceeding on the Commission's action.''

Dated at Rockville, Maryland, this 8th day of September 2000.

For the Nuclear Regulatory Commission.

Donna M. Skay,

Project Manager, Section 2, Project Directorate III, Division of Licensing Project Management, Office of Nuclear Reactor Regulation.

[FR Doc. 00–23609 Filed 9–13–00; 8:45 am]

BILLING CODE 7590–01–P

NUCLEAR REGULATORY COMMISSION

[Docket Nos. 50–352, 50–353, 50–171, 50–277, 50–278, 50–272, 50–311]

Peco Energy Company, Limerick Generating Station, Units 1 and 2; Peach Bottom Atomic Power Station, Unit Nos. 1, 2, and 3; Salem Nuclear Generating Station, Unit Nos. 1 and 2; Correction to Notice of Consideration of Approval of Application Regarding Proposed Corporate Restructuring and Opportunity for a Hearing

On August 31, 2000, the **Federal Register** published a notice of consideration of issuance of an order under 10 CFR 50.80 approving the indirect transfer of Facility Operating Licenses Nos. NPF–39 and NPF–85 for Limerick Generating Station, Units 1 and 2; DPR–12, DPR–44, and DPR–56 for Peach Bottom Atomic Power Station, Unit Nos. 1, 2, and 3; and DPR–70 and DPR–75 for Salem Nuclear Generating Station, Unit Nos. 1 and 2. On pages 53046, column 1; 53045, column 1; and 53047, column 1, the following sentence is corrected to read: ''By September 20, 2000, any person whose interest may be affected by the Commission's action on the application may request a hearing and, if not the applicant, may petition for leave to intervene in a hearing proceeding on the Commission's action.''

Dated at Rockville, Maryland, this 8th day of September 2000.

For the Nuclear Regulatory Commission.

Donna M. Skay,

Project Manager, Section 2, Project Directorate III, Division of Licensing Project Management, Office of Nuclear Reactor Regulation.

[FR Doc. 00–23606 Filed 9–13–00; 8:45 am]

BILLING CODE 7590–01–P

NUCLEAR REGULATORY COMMISSION

[Docket No. 50–352]

PECO Energy Company (Limerick Generating Station, Unit 1); Exemption

I

The PECO Energy Company (PECO, the licensee) is the holder of Facility Operating License No. NPF–39 which authorizes operation of the Limerick Generating Station, Unit 1 (Limerick Unit 1). The license provides, among other things, that the facility is subject to all rules, regulations, and orders of the U.S. Nuclear Regulatory Commission (NRC, the Commission) now or hereafter in effect.

The facility consists of a boiling water reactor located in Montgomery and Chester Counties in Pennsylvania.

II

Title 10 of the Code of Federal Regulations (10 CFR) Part 50, Appendix G, requires that pressure-temperature (P–T) limits be established for reactor pressure vessels (RPVs) for normal operating and hydrostatic or leak rate testing conditions. Specifically, 10 CFR Part 50, Appendix G states, ''The appropriate requirements on both the pressure-temperature limits and the minimum permissible temperature must be met for all conditions.'' Appendix G of 10 CFR Part 50 specifies that the P–T limits identified as ''ASME Appendix G limits'' in Table 1 require that the limits must be at least as conservative as the limits obtained by following the methods of analysis and the margins of safety of Appendix G of Section XI of the ASME Code.

To address provisions of a proposed license amendment to the technical specification P–T limits for the Limerick facility, the licensee requested in its submittal of May 15, 2000, as supplemented by May 19 and August 10, 2000, that the staff exempt Limerick Unit 1 from application of specific requirements of 10 CFR Part 50, Section 50.60(a) and Appendix G, and substitute use of ASME Code Cases N–588 and N–640. Code Case N–588 permits the postulation of a circumferentially-oriented flaw (in lieu of an axially-oriented flaw) for the evaluation of the circumferential welds in RPV P–T limit curves. Since the pressure stresses on a circumferentially-oriented flaw are lower than the pressure stresses on an axially-oriented flaw by a factor of 2, using Code Case N–588 for establishing the P–T limits would be less conservative than the methodology currently endorsed by 10 CFR Part 50, Appendix G, and, therefore, an exemption to apply the Code Case would be required by 10 CFR 50.60. Code Case N–640 permits the use of an alternate reference fracture toughness (K_{Ic} fracture toughness curve instead of K_{Ia} fracture toughness curve) for reactor vessel materials in determining the P–T limits. Since the K_{Ic} fracture toughness curve shown in ASME Section XI, Appendix A, Figure A–2200–1 (the K_{Ic} fracture toughness curve, K_{Ic} curve) provides greater allowable fracture toughness than the corresponding K_{Ia} fracture toughness curve of ASME Section XI, Appendix G, Figure G–2210–1 (the K_{Ia} fracture toughness curve, K_{Ia} curve), using Code Case N–640 for establishing the P–T limits would be less conservative than the methodology currently endorsed by 10 CFR Part 50, Appendix G, and, therefore, an exemption to apply the Code Case would also be required by 10 CFR 50.60.

Code Case N–588

The licensee has proposed an exemption to allow the use of ASME Code Case N–588 in conjunction with ASME Section XI, 10 CFR 50.60(a) and 10 CFR Part 50, Appendix G, to determine the P–T limits.

The proposed license amendment to revise the P–T limits for Limerick Unit 1 relies, in part, on the requested exemption. These proposed P–T limits have been developed using the postulation of a circumferentially-oriented reference flaw as the limiting flaw in an RPV circumferential weld in lieu of an axially-oriented flaw required by the 1989 Edition of ASME Section XI, Appendix G.

Postulating the Appendix G [axially-oriented flaw] reference flaw in a circumferential weld is physically unrealistic and overly conservative, because the length of the flaw would extend well beyond the girth of the circumferential weld and into the adjoining base metal material. Industry experience with the repair of weld indications found during preservice inspection and data taken from destructive examination of actual vessel welds confirm that any remaining flaws are small, laminar in nature, and do not transverse the weld bead orientation.

Therefore, any potential defects, introduced during the fabrication process and not detected during subsequent nondestructive examinations, would only be expected to be oriented in the direction of weld fabrication. A defect with a circumferential orientation is therefore postulated by the ASME Code for circumferential welds.

An analysis provided to the ASME Code's Working Group on Operating Plant Criteria (in which Code Case N–588 was developed) indicated that if an axial flaw is postulated on a circumferential weld, then, based on the correction factors for membrane stress (M_m) given in the Code Case for the inside diameter circumferential (0.443) and axial (0.926) flaw orientations, it is equivalent to applying a safety factor of 4.18 on the pressure loading under normal operating conditions. Appendix G requires a safety factor of 2 on the contribution of the pressure load in the case of an axially-oriented flaw in an axial weld, shell plate, or forging. By postulating a circumferentially-oriented flaw on a circumferential weld and using the appropriate stress magnification factor, the margin of 2 is maintained for the contribution of the pressure load to the integrity calculation of the circumferential weld. Consequently, the NRC staff determined that the postulation of an axially-oriented flaw on a circumferential RPV weld is a level of conservatism that is not required to establish P–T limits to protect the reactor coolant system (RCS) pressure boundary from failure during hydrostatic testing, heatup, and cooldown.

The NRC staff noted that ASME Code Case N–588 also includes changes to the methodology for determining the thermal stress intensity, K_{IT}. The staff already accepted the use of Code Case N–588, including the modifications made to the K_{IT} methodology, for exemption requests from other licensees. Hence, the licensee may use the methodology in the edition of ASME Section XI of record, or later approved Editions of Section XI through the 1995 Edition, inclusive of the 1996 Addenda, or the methodology contained in Code Case N–588 for determining K_{IT}.

In summary, the ASME Section XI, Appendix G, procedure was developed for axially-oriented flaws. It is physically unrealistic and overly conservative to postulate flaws of this orientation to exist in circumferential welds. Hence, the NRC staff concurs that relaxation of the ASME Section XI, Appendix G, requirements by application of ASME Code Case N–588 is acceptable and would maintain, pursuant to 10 CFR 50.12(a)(2)(ii), the underlying purpose of the ASME Code and the NRC regulations to ensure an acceptable margin of safety.

Code Case N–640 (formerly Code Case N–626)

The licensee has proposed an exemption to allow use of ASME Code Case N–640 in conjunction with ASME Section XI, 10 CFR 50.60(a) and 10 CFR Part 50, Appendix G, to determine P–T limits.

The proposed license amendment to revise the P–T limits for Limerick Unit 1 relies in part on the requested exemption. These revised P–T limits have been developed using the K_{Ic} fracture toughness curve, in lieu of the K_{Ia} fracture toughness curve, as the lower bound for fracture toughness.

Use of the K_{Ic} curve in determining the lower bound fracture toughness in the development of P–T operating limits curve is more technically correct than use of the K_{Ia} curve since the rate of loading during a heatup or cooldown is slow and is more representative of a static condition than a dynamic condition. The K_{Ic} curve appropriately implements the use of static initiation fracture toughness behavior to evaluate the controlled heatup and cooldown process of a reactor vessel. The NRC staff has required use of the initial conservatism of the K_{Ia} curve since 1974 when the curve was codified. This initial conservatism was necessary due to the limited knowledge of RPV materials. Since 1974, additional knowledge has been gained about RPV materials which demonstrates that the lower bound on fracture toughness provided by the K_{Ia} curve is well beyond the margin of safety required to protect the public health and safety from potential RPV failure. In addition, P–T curves based on the K_{Ic} curve will enhance overall plant safety by opening the P–T operating window with the greatest safety benefit in the region of low temperature operations.

Since the RCS P–T operating window is defined by the P–T operating and test limit curves developed in accordance with ASME Section XI, Appendix G, continued operation of Limerick Unit 1 with these P–T curves without the relief provided by ASME Code Case N–640 would unnecessarily require that the RPV maintain a temperature exceeding 212 °F in a limited operating window during pressure tests. Consequently, steam vapor hazards would continue to be one of the safety concerns for personnel conducting inspections in primary containment. Implementation of the proposed P–T curves, as allowed by ASME Code Case N–640, does not significantly reduce the margin of safety and would eliminate steam vapor hazards by allowing inspections in primary containment to be conducted at a lower coolant temperature. Thus, pursuant to 10 CFR 50.12(a)(2)(ii), the underlying purpose of the regulation will continue to be served.

In summary, the ASME Section XI, Appendix G, procedure was conservatively developed based on the level of knowledge existing in 1974 concerning RPV materials and the estimated effects of operation. Since 1974, the level of knowledge about these topics has been greatly expanded. The NRC staff concurs that this increased knowledge permits relaxation of the ASME Section XI, Appendix G, requirements by application of ASME Code Case N–640, while maintaining, pursuant to 10 CFR 50.12(a)(2)(ii), the underlying purpose of the ASME Code and the NRC regulations to ensure an acceptable margin of safety.

III

Pursuant to 10 CFR 50.12, the Commission may, upon application by any interested person or upon its own initiative, grant exemptions from the requirements of 10 CFR Part 50, when (1) the exemptions are authorized by law, will not present an undue risk to public health or safety, and are consistent with the common defense and security; and (2) when special circumstances are present. These circumstances include the special circumstances that ''Application of the regulation in the particular circumstances would not serve the underlying purpose of the rule or is not necessary to achieve the underlying purpose of the rule; * * *'' The staff accepts the licensee's determination that the exemption would be required to approve the use of Code Cases N–588 and N–640. The staff examined the licensee's rationale to support the exemption requests and concurred that the use of the code cases would meet the underlying purpose of 10 CFR Part 50, Appendix G, and therefore, application of the assumed flaw types and the K_{Ia} equation in Appendix G to Section XI of the ASME Code, as invoked by the rule, is not necessary to meet the underlying purpose of the regulation and thus meets the special circumstance criterion of 10 CFR 50.12(a)(2)(ii) for granting the exemption requests. Based upon a consideration of the conservatism that is explicitly incorporated into the methodologies of 10 CFR Part 50, Appendix G; Appendix G of the ASME Code; and Regulatory Guide 1.99, Revision 2; the staff concludes that

application of the code cases as described would provide an adequate margin of safety against brittle failure of the RPV. (See the attached safety evaluation supporting these findings.) This is also consistent with the determination that the staff has reached for other licensees under similar conditions based on the same considerations including Quad Cities Nuclear Power Station, Units 1 and 2, exemption dated February 4, 2000. Therefore, the staff concludes that granting an exemption under the special circumstances of 10 CFR 50.12(a)(2)(ii) is appropriate and that the methodology of Code Cases N–588 and N–640 may be used to revise the P–T limits for Limerick Unit 1.

IV

Accordingly, the Commission has determined that, pursuant to 10 CFR 50.12(a), the exemption is authorized by law, will not endanger life or property or common defense and security, and is, otherwise, in the public interest. Also, special circumstances are present. Therefore, the Commission hereby grants PECO an exemption from the requirements of 10 CFR Part 50, Section 50.60(a) and 10 CFR Part 50, Appendix G, for Limerick Unit 1.

Pursuant to 10 CFR 51.32, the Commission has determined that the granting of this exemption will not have a significant effect on the quality of the human environment (65 FR 54081).

This exemption is effective upon issuance.

Dated at Rockville, Maryland, this 7th day of September 2000.

For the Nuclear Regulatory Commission.

John A. Zwolinski,

Director, Division of Licensing Project Management, Office of Nuclear Reactor Regulation.

Safety Evaluation by the Office of Nuclear Reactor Regulation Exemption Request by the Peco Energy Company to Update the Pressure-Temperature Limits for the Limerick Generating Station, Unit 1, Facility Operating License No. NPF–39

[Docket No. 50–352]

1.0 Introduction

1.1 Requirements for Generating Pressure-Temperature (P–T) Limits for Nuclear Power Generation Facilities

The U.S. Nuclear Regulatory Commission (NRC) has established requirements in Appendix G of Part 50 to Title 10 of the *Code of Federal Regulations* (10 CFR Part 50, Appendix G), to protect the integrity of the reactor coolant pressure boundary in nuclear power plants. The Appendix to Part 50 requires the pressure-temperature (P–T) limits for an operating plant to be at least as conservative as those that would be generated if the methods of Appendix G to Section XI of the American Society of Mechanical Engineers Boiler and Pressure Vessel Code (Appendix G to the ASME Code) were applied. The methodology of Appendix G to the ASME Code postulates the existence of a sharp surface flaw in the reactor pressure vessel (RPV) that is normal to the direction of the maximum applied stress. For materials in the beltline and upper and lower head regions of the RPV, the maximum flaw size is postulated to have a depth that is equal to one-fourth of the thickness and a length equal to 1.5 times the thickness. For the case of evaluating RPV nozzles, the surface flaw is postulated to propagate parallel to the axis of the nozzle's corner radius. The basic parameter in Appendix G to the ASME Code for calculating P–T limit curves is the stress intensity factor, K_I, which is a function of the stress state and flaw configuration. The methodology requires that licensees determine the reference stress intensity (K_{Ia}) factors, which vary as a function of temperature, from the reactor coolant system (RCS) operating temperatures, and from the adjusted reference temperatures (ARTs) for the limiting materials in the RPV. Thus, the critical locations in the RPV beltline and head regions are the ¼-thickness (¼T) and ¾-thickness (¾T) locations, which correspond to the points of the crack tips if the flaws are initiated and grown from the inside and outside surfaces of the vessel, respectively. Regulatory Guide (RG) 1.99, Revision 2, provides an acceptable method of calculating ARTs for ferritic RPV materials; the methods of RG 1.99, Revision 2, include methods for adjusting the ARTs of materials in the beltline region of the RPV, where the effects of neutron irradiation may induce an increased level of embrittlement in the materials.

The methodology of Appendix G requires that P–T curves must satisfy a safety factor of 2.0 on primary membrane and bending stresses during normal plant operations (including heatups, cooldowns, and transient operating conditions), and a safety factor of 1.5 on primary membrane and bending stresses when leak rate or hydrostatic pressure tests are performed on the RCS. Table 1 to 10 CFR Part 50, Appendix G, provides the staff's criteria for meeting the P–T limit requirements of Appendix G to the ASME Code and 10 CFR Part 50, Appendix G.

1.2 PECO Energy Company's Submittal of May 15, 2000

On May 15, 2000, PECO Energy Company (PECO) submitted a license amendment request to update the P–T limit curves for the Limerick Generating Station (LGS), Unit 1 (Reference 1). In the license amendment request, PECO also requested NRC approval for exemptions to use two Code Cases, N–588 and N–640, as methods that would allow PECO to deviate from complying with the requirements in 10 CFR Part 50, Appendix G, for generating the P–T limit curves. Requests for such exemptions are allowed pursuant to 10 CFR 50.60(b), which allows licensees to use alternatives to the requirements of 10 CFR Part 50, Appendices G and H, if an exemption to use the alternatives is granted by the Commission pursuant to 10 CFR 50.12. According to 10 CFR 50.12, the Commission may, upon request, grant exemptions to the requirements of 10 CFR Part 50, if the exemptions are authorized by law, will not present an undue risk to the public health and safety, and are consistent with the common defense and security. In considering the exemptions, the Commission will not consider granting exemptions unless special circumstances are present. These special circumstances include, but are not limited to, the following special cases:

- Pursuant to 10 CFR 50.12(a)(2)(ii), the circumstance that application of the regulation in the particular circumstances would not serve the underlying purpose of the rule or is not necessary to achieve the underlying purpose of the rule,
- Pursuant to 10 CFR 50.12(a)(2)(iii), the circumstance that compliance would result in undue hardship or other costs that are significantly in excess of those contemplated when the regulation was adopted, or that are significantly in excess of those incurred by others similarly situated, and
- Pursuant to 10 CFR 50.12(a)(2)(vi), the circumstance that there is present any other material circumstance not considered when the regulation was adopted for which it would be in the public interest to grant an exemption

The staff's assessment of the exemption request is given in Section 2.0 of this safety evaluation (SE).

2.0 Requests for Exemptions to use Code Cases N–588 and N–640 as Part of the Methods Used for Generation of the Updated P–T Curves

2.1 Exemption Request To Use Code Case N–588

PECO has requested, pursuant to 10 CFR 50.60(b), an exemption to use Code Case N–588 as the basis for evaluating the axial and circumferential welds in the LGS Unit 1 RPV. The current methods of Appendix G to the ASME Code mandate consideration of an axial flaw in full penetration RPV welds, and thus, for circumferential welds, dictate that the flaw be oriented transverse to the axis of the weld. Postulation of an axial flaw in a circumferential weld is unrealistic because the length of the flaw would extend well beyond the girth of the circumferential weld and into the adjoining base metal material. Industry experience with the repair of weld indications found during preservice inspection and data taken from destructive examination of actual vessel welds confirm that any remaining flaws are small, laminar in nature, and do not transverse the weld bead orientation. Therefore, any potential defects, introduced during the fabrication process and not detected during subsequent nondestructive examinations, would only be expected to be oriented in the direction of weld fabrication. For circumferential RPV welds, the methods of the Code Case, therefore, postulate the presence of a flaw that is oriented in a direction parallel to the axis of the weld (*i.e.,* in a circumferential orientation).

An analysis provided to the ASME Code's Working Group on Operating Plant Criteria (WGOPC) (in which Code Case N–588 was developed) indicated that if an axial flaw is postulated on a circumferential weld, then, based on the correction factors for membrane stress (M_m) given in the Code Case for the inside diameter circumferential (0.443) and axial (0.926) flaw orientations, it is equivalent to applying a safety factor of 4.18 on the pressure loading under normal operating conditions.[1] Appendix G to the ASME Code only requires that a safety factor of 2 be placed on the contribution of the pressure load in the case of an axially-oriented flaw in an axial weld, shell plate, or forging. By postulating a circumferentially-oriented flaw on a circumferential weld and using the appropriate correction factor, the margin of 2 is maintained for the stress integrity calculation for the circumferential weld. Consequently, the staff determined that the postulation of an axially-oriented flaw on a circumferential RPV weld adds a level of conservatism in the P–T limits that goes beyond the margins of safety required by 10 CFR Part 50, Appendix G, and by Appendix G of Section XI of the ASME Code.

The Code Case method for evaluating axially-oriented flaws postulated in axial welds or base metal materials does not deviate from the methods for evaluating them in the 1995 Edition of Appendix G to the ASME Code. Thus, application of Code Case N–588 will only matter if the Code Case is applied for the case where a circumferential weld is the most limiting material in the beltline region of the boiling water reactor designed RPV. Since application of the Code Case methods allows licensees to reduce the stress intensities attributed to the circumferential weld, the net effect of the Code Case would allow PECO to use the next most limiting base metal or axial weld material in the RPV as the basis for evaluating the vessel and generating the P–T limit curves, if the circumferential weld (girth weld) is the most limiting material in the beltline region of the vessel. In this case, the Code Case is really not relevant to the evaluation of the LGS Unit 1 RPV, because the LGS Unit 1 RPV is limited in the beltline region by Lower-Intermediate Plate 17–2 (Heat No. C7677–1).[2] However, the use of this Code Case by the licensee results in a more accurate calculation of the applied stress intensity factor for axial welds than would be obtained using Appendix G of Section XI of the ASME Code.

WGOPC has concluded that application of Code Case N–588 to plant P–T limits is still sufficient to ensure the structural integrity of RPVs during plant operations. The staff has concurred with WGOPC's determination and has previously granted exemptions to use Code Case N–588 for the Quad Cities Nuclear Power Station (Quad Cities) (i.e., NRC letter to Commonwealth Edison dated February 4, 2000, Reference 2). In the staff's letter of February 4, 2000, the staff concluded that the procedure in Appendix G to the ASME Code was developed for axially-oriented flaws and that such a procedure was physically unrealistic and overly conservative for postulating flaws of this orientation in a circumferential weld. The staff also concluded that relaxation of the requirements of Appendix G to the Code by application of Code Case N–588 is acceptable and would maintain, pursuant to 10 CFR 50.12(a)(2)(ii), the underlying purpose of the ASME Code and the NRC regulations to ensure an acceptable margin of safety for the Quad Cities RPVs and reactor coolant pressure. PECO's proposal to use Code Case N–588 for generation of the LGS Unit 1 P–T limit curves is predicated on the same technical basis as was used for generation of the Quad Cities P–T limits. The staff, therefore, concludes that Code Case N–588 is acceptable for application to the LGS Unit 1 P–T limits; however, since the LGS Unit 1 RPV is a plate-limited vessel, application of Code Case N–588 in this case will not provide PECO with any reduction in burden for the proposed LGS Unit 1 P–T limits.

2.2 Exemption Request To Use Code Case N–640

PECO has requested, pursuant to 10 CFR 50.60(b), an exemption to use ASME Code Case N–640 (previously designated as Code Case N–626) as the basis for establishing the P–T limit curves. Code Case N–640 permits application of the lower bound static initiation fracture toughness value equation (K_{Ic} equation) as the basis for establishing the curves in lieu of using the lower bound crack arrest fracture toughness value equation (i.e., the K_{Ia} equation, which is based on conditions needed to arrest a dynamically propagating crack, and which is the method invoked by Appendix G of Section XI of the ASME Code). Use of the K_{Ic} equation in determining the lower bound fracture toughness in the development of the P–T operating limits curve is more technically correct than the use of the K_{Ia} equation since the rate of loading during a heatup or cooldown is slow and is more representative of a static condition than a dynamic condition. The K_{Ic} equation appropriately implements the use of the static initiation fracture toughness behavior to evaluate the controlled heatup and cooldown process of a reactor vessel. The staff has required use of the initial conservatism of the K_{Ia} equation since 1974 when the equation was codified. This initial conservatism was necessary due to the limited knowledge of RPV materials. Since 1974, additional knowledge has been gained about RPV materials, which

[1] The margin of safety of 4.18 is arrived at by dividing 0.926 by 0.443 and then multiplying by the required safety factor of 2.

[2] The most limiting ¼T material for the generation of the LGS Unit 1 P–T limits is Lower-Intermediate Shell Plate 17–2 (Material Heat C7677–1). This plate has ¼T nil ductility reference temperature (RT_{NDT}) values at 22 effective full power years (EFPY) and 32 EFPY of 78 °F and 89 °F, respectively. In contrast, the ¼T RT_{NDT} values for the most limiting circumferential weld material (i.e, Weld Heat 640892/J424B27AE) at 22 EFPY and 32 EFPY are considerably less conservative, at 37 °F and 54 °F, respectively.

demonstrates that the lower bound on fracture toughness provided by the K_{Ic} equation is well beyond the margin of safety required to protect the public health and safety from potential RPV failure. In addition, P–T curves based on the K_{Ic} equation will enhance overall plant safety by opening the P–T operating window with the greatest safety benefit in the region of low temperature operations.

Generating the RCS P–T limit curves developed in accordance with Appendix G to the ASME Code, without the relief provided by ASME Code Case N–640, would unnecessarily require the RPV to be maintained at a temperature exceeding 212°F during the pressure test.

Consequently, steam vapor hazards would continue to be one of the safety concerns for personnel conducting inspections in primary containment. Implementation of the proposed curves, as allowed by ASME Code Case N–640, does not significantly reduce the margin of safety and would eliminate steam vapor hazards by allowing inspections in primary containment to be conducted at a lower coolant temperature. Thus, pursuant to 10 CFR 50.12(a)(2)(ii), the underlying purpose of the regulation will continue to be served. However, since use of the K_{Ic} equation results in the calculations of less conservative P–T limits than does use of the K_{Ia} equation, licensees need staff approval to apply the Code Case methods to the P–T limit calculations.

WGOPC has concluded that application of Code Case N–640 to plant P–T limits is still sufficient to ensure the structural integrity of RPVs during plant operations. The staff has concurred with ASME's determination and has previously granted exemptions to use Code Case N–640 for Quad Cities (*i.e.*, in the NRC letter to Commonwealth Edison dated February 4, 2000, Reference 2). In the staff's letter of February 4, 2000, the staff concluded that application of Code Case N–640 would not significantly reduce the safety margins required by 10 CFR Part 50, Appendix G, and would eliminate steam vapor hazards by allowing inspections in the primary containment to be conducted at a lower coolant temperature. The staff also concluded that relaxation of the requirements of Appendix G to the Code by application of Code Case N–640 is acceptable and would maintain, pursuant to 10 CFR 50.12(a)(2)(ii), the underlying purpose of the ASME Code and the NRC regulations to ensure an acceptable margin of safety for the Quad Cities RPVs and reactor coolant pressure boundary. PECO's proposal to use Code Case N–640 for generation of the LGS Unit 1 P–T limit curves is predicated on the same technical basis as was used for generation of the Quad Cities P-T limits. The staff, therefore, concludes that Code Case N–640 is acceptable for application to the LGS Unit 1 P–T limits.

3.0 Conclusion

The staff has determined that PECO has provided sufficient technical bases for using the methods of Code Cases N–588 and N–640 in the calculation of the P–T limits for LGS Unit 1. The staff has also determined that application of Code Case N–588 and Code Case N–640 to the P–T limit calculations will continue to serve the purpose in 10 CFR Part 50, Appendix G, for protecting the structural integrity of the LGS Unit 1 RPV and reactor coolant pressure boundary. In this case, since strict compliance with requirements of 10 CFR 50.60(a) and 10 CFR Part 50, Appendix G, is not necessary to achieve the overall intent of the regulations, the staff concludes that application of the Code Cases N–588 and N–640 to the P–T limit calculations meets the special circumstance provisions in 10 CFR 50.12(a)(2)(ii), for granting exemptions to the regulations, and that, pursuant to 10 CFR 50.12(a)(1), the granting of these exemptions is authorized by law, will not present undue risk to the public health and safety, and is consistent with the common defense and security. The staff therefore grants exemptions to 10 CFR 50.60(a) and 10 CFR Part 50, Appendix G, to allow PECO to use Code Cases N–588 and N–640 as the part of the bases for generating the P–T limit curves for LGS Unit 1; however, since the LGS Unit 1 RPV is a plate-limited vessel, application of Code Case N–588 in this case will not provide PECO with any relaxation in the burden for the generating the unit's P–T limits.

4.0 References

1. Letter from J. A. Hutton, Director—Licensing, Limerick Generating Station, Unit 1, to the U.S. Nuclear Regulatory Commission, Document Control Desk, ''Limerick Generating Station, Unit 1, Technical Specifications Change Request No. 00–02–1, Changes to Reactor Pressure Vessel Pressure-Temperature Limits,'' dated May 15, 2000.

2. Letter from S. N. Bailey, U.S. Nuclear Regulatory Commission, to O. D. Kingsley, Commonwealth Edison Company, ''Quad Cities—Exemption from the Requirements of 10 CFR Part 50, Section 50.60(a) and Appendix G,'' dated February 4, 2000.

Principal Contributors: J. Medoff, B Buckley.

Date: September 7, 2000.

[FR Doc. 00–23610 Filed 9–13–00; 8:45 am]

BILLING CODE 7590–01–U

NUCLEAR REGULATORY COMMISSION

[Docket No. 50–333]

Power Authority of the State of New York, Notice of Consideration of Issuance of Amendment to Facility Operating License, Proposed No Significant Hazards Consideration Determination and Opportunity for a Hearing

The U.S. Nuclear Regulatory Commission (the Commission) is considering issuance of an amendment to Facility Operating License No. NPF–59, issued to the Power Authority of the State of New York, (the licensee), for operation of the James A. FitzPatrick Nuclear Power Plant, (FitzPatrick), located in Oswego County, New York.

The proposed amendment would incorporate the additional provisions of analogous Boiling-Water Reactor Technical Specifications Limiting Condition for Operation 3.04 and Surveillance Requirements 3.04 into Technical Specification 3.0.D and 4.0.D respectively. (The Boiling-Water Reactor Technical Specification was adopted in the licensee's request for converting the Current Technical Specifications to the Improved Standard Technical Specifications by letter dated March 31, 1999, and was noticed in the **Federal Register** (64 FR 66509)). The proposed amendment would permit proceeding from the run mode through the startup mode to the shutdown mode without the conditions of TSs 3.0.D and 4.0.D being met, a condition already permitted if required to comply with an Action requirement.

The exigent need for the proposed amendment to the TSs was the result of not having immediate availability of testing equipment needed to calibrate instruments that were required to be operable in the startup mode. Delaying the calibration of the instrumentation until the calibration equipment was made available would require several hours. It was considered undesirable to delay transitioning from the run mode to the startup mode because (1) it was desirable to transition from the run mode to the startup mode as expeditiously as possible because the time to complete failure of the electro-hydraulic control system (EHC) hydraulic control oil pressure boundary was unknown, and (2) manually scramming the reactor would adversely

affect the degraded EHC system and therefore pose a significant challenge to the main condenser as a heat sink.

Before issuance of the proposed license amendment, the Commission will have made findings required by the Atomic Energy Act of 1954, as amended (the Act) and the Commissions regulations.

Pursuant to 10 CFR 50.91(a)(6) for amendments to be granted under exigent circumstances, the NRC staff must determine that the amendment request involves no significant hazards consideration. Under the Commissions regulations in 10 CFR 50.92, this means that operation of the facility in accordance with the proposed amendment would not (1) involve a significant increase in the probability or consequences of an accident previously evaluated; or (2) create the possibility of a new or different kind of accident from any accident previously evaluated; or (3) involve a significant reduction in a margin of safety. As required by 10 CFR 50.91(a), the licensee has provided its analysis of the issue of no significant hazards consideration, which is presented below:

1. The proposed change will not involve a significant increase in the probability or consequences of an accident previously evaluated.

The proposed changes to the TS would permit proceeding from the Run Mode through the Startup Mode to the Shutdown Mode without the conditions of CTS [Current Technical Specifications] 3.0.D and 4.0.D being met, a condition already permitted if required to comply with an Action requirement. The proposed changes do not introduce a new condition or set of circumstances, they merely expand the applicability of existing TS provisions to cover unplanned shutdowns where continued operation would be imprudent, and where unnecessary transients associated with shutdown by manual scram can be avoided. As such, the proposed changes do not introduce new conditions and therefore, will not increase the probability or consequences of any previously evaluated accidents.

2. The proposed change will not create the possibility of a new or different kind of accident.

The proposed changes to the TS permit proceeding from the Run Mode through the Startup Mode to the Shutdown Mode without the conditions of CTS 3.0.D and 4.0.D being met, a condition already permitted if required to comply with an Action requirement. Since this condition is already permitted by TS, the proposed TS change cannot create the possibility of a new or different kind of accident.

Therefore, the proposed TS changes do not create the possibility of a new or different kind of accident from any accident previously evaluated.

3. The proposed change will not involve a significant reduction in a margin of safety.

The proposed changes to the TS do not introduce any new conditions for plant operation. By extending the existing Action requirement exception to CTS 3.0.D and 4.0.D to include plant shutdowns, prudent action to conduct an expeditious, controlled shutdown is permitted where appropriate. Such action reduces the potential of unplanned plant transients and reduces challenges to automatic initiation of safety systems.

Therefore, the proposed TS changes do not involve a significant reduction in a margin of safety.

The NRC staff has reviewed the licensee's analysis and, based on this review, it appears that the three standards of 10 CFR 50.92(c) are satisfied. Therefore, the NRC staff proposes to determine that the amendment request involves no significant hazards consideration.

The Commission is seeking public comments on this proposed determination. Any comments received within 14 days after the date of publication of this notice will be considered in making any final determination.

Normally, the Commission will not issue the amendment until the expiration of the 14-day notice period. However, should circumstances change during the notice period, such that failure to act in a timely way would result, for example, in derating or shutdown of the facility, the Commission may issue the license amendment before the expiration of the 14-day notice period, provided that its final determination is that the amendment involves no significant hazards consideration. The final determination will consider all public and State comments received. Should the Commission take this action, it will publish in the **Federal Register** a notice of issuance. The Commission expects that the need to take this action will occur very infrequently.

Written comments may be submitted by mail to the Chief, Rules and Directives Branch, Division of Administrative Services, Office of Administration, U.S. Nuclear Regulatory Commission, Washington, DC 20555–0001, and should cite the publication date and page number of this **Federal Register** notice. Written comments may also be delivered to Room 6D59, Two White Flint North, 11545 Rockville Pike, Rockville, Maryland, from 7:30 a.m. to 4:15 p.m. Federal workdays. Copies of written comments received may be examined at the NRC Public Document Room, the Gelman Building, 2120 L Street, NW., Washington, DC.

The filing of requests for hearing and petitions for leave to intervene is discussed below.

By October 16, 2000, the licensee may file a request for a hearing with respect to issuance of the amendment to the subject facility operating license and any person whose interest may be affected by this proceeding and who wishes to participate as a party in the proceeding must file a written request for a hearing and a petition for leave to intervene. Requests for a hearing and a petition for leave to intervene shall be filed in accordance with the Commission's ''Rules of Practice for Domestic Licensing Proceedings'' in 10 CFR Part 2. Interested persons should consult a current copy of 10 CFR 2.714 which is available at the Commission's Public Document Room, the Gelman Building, 2120 L Street, NW., Washington, DC, and accessible electronically through the ADAMS Public Electronic Reading Room link at the NRC Web site (http://www.nrc.gov). If a request for a hearing or petition for leave to intervene is filed by the above date, the Commission or an Atomic Safety and Licensing Board, designated by the Commission or by the Chairman of the Atomic Safety and Licensing Board Panel, will rule on the request and/or petition; and the Secretary or the designated Atomic Safety and Licensing Board will issue a notice of hearing or an appropriate order.

As required by 10 CFR 2.714, a petition for leave to intervene shall set forth with particularity the interest of the petitioner in the proceeding, and how that interest may be affected by the results of the proceeding. The petition should specifically explain the reasons why intervention should be permitted with particular reference to the following factors: (1) The nature of the petitioner's right under the Act to be made a party to the proceeding; (2) the nature and extent of the petitioner's property, financial, or other interest in the proceeding; and (3) the possible effect of any order which may be entered in the proceeding on the petitioner's interest. The petition should also identify the specific aspect(s) of the subject matter of the proceeding as to which petitioner wishes to intervene. Any person who has filed a petition for leave to intervene or who has been admitted as a party may amend the petition without requesting leave of the Board up to 15 days prior to the first prehearing conference scheduled in the proceeding, but such an amended petition must satisfy the specificity requirements described above.

Not later than 15 days prior to the first prehearing conference scheduled in the proceeding, a petitioner shall file a supplement to the petition to intervene which must include a list of the

contentions which are sought to be litigated in the matter. Each contention must consist of a specific statement of the issue of law or fact to be raised or controverted. In addition, the petitioner shall provide a brief explanation of the bases of the contention and a concise statement of the alleged facts or expert opinion which support the contention and on which the petitioner intends to rely in proving the contention at the hearing. The petitioner must also provide references to those specific sources and documents of which the petitioner is aware and on which the petitioner intends to rely to establish those facts or expert opinion. Petitioner must provide sufficient information to show that a genuine dispute exists with the applicant on a material issue of law or fact. Contentions shall be limited to matters within the scope of the amendment under consideration. The contention must be one which, if proven, would entitle the petitioner to relief. A petitioner who fails to file such a supplement which satisfies these requirements with respect to at least one contention will not be permitted to participate as a party.

Those permitted to intervene become parties to the proceeding, subject to any limitations in the order granting leave to intervene, and have the opportunity to participate fully in the conduct of the hearing, including the opportunity to present evidence and cross-examine witnesses.

If the amendment is issued before the expiration of the 30-day hearing period, the Commission will make a final determination on the issue of no significant hazards consideration. If a hearing is requested, the final determination will serve to decide when the hearing is held.

If the final determination is that the amendment request involves no significant hazards consideration, the Commission may issue the amendment and make it immediately effective, notwithstanding the request for a hearing. Any hearing held would take place after issuance of the amendment.

If the final determination is that the amendment request involves a significant hazards consideration, any hearing held would take place before the issuance of any amendment.

A request for a hearing or a petition for leave to intervene must be filed with the Secretary of the Commission, U.S. Nuclear Regulatory Commission, Washington, DC 20555–0001, Attention: Rulemakings and Adjudications Staff, or may be delivered to the Commission's Public Document Room, the Gelman Building, 2120 L Street, NW., Washington, DC, by the above date. A copy of the petition should also be sent to the Office of the General Counsel, U.S. Nuclear Regulatory Commission, Washington, DC 20555–0001, and to Mr. David E. Blabey, 1633 Broadway, New York, New York 10019, attorney for the licensee.

Nontimely filings of petitions for leave to intervene, amended petitions, supplemental petitions and/or requests for hearing will not be entertained absent a determination by the Commission, the presiding officer or the presiding Atomic Safety and Licensing Board that the petition and/or request should be granted based upon a balancing of the factors specified in 10 CFR 2.714(a)(1)(i)–(v) and 2.714(d).

For further details with respect to this action, see the application for amendment dated August 29, 2000, as supplemented September 8, 2000, which are available for public inspection at the Commission's Public Document Room, the Gelman Building, 2120 L Street, NW., Washington, DC, and accessible electronically through the ADAMS Public Electronic Reading Room link at the NRC Web site (http://www.nrc.gov).

Dated at Rockville, Maryland, this 11th day of September 2000.

For the Nuclear Regulatory Commission.

Guy S. Vissing,

Senior Project Manager, Section 1, Project Directorate I, Division of Licensing Project Management, Office of Nuclear Reactor Regulation.

[FR Doc. 00–23605 Filed 9–13–00; 8:45 am]

BILLING CODE 7590–01–P

SECURITIES AND EXCHANGE COMMISSION

Submission for OMB Review; Comment Request

Upon Written Request, Copies Available From: Securities and Exchange Commission, Office of Filings and Information Services, Washington, DC 20549

Extension:

- Rules 1(a), 1(b), Forms U5A and U5B, SEC File No. 270–168, OMB Control No. 3235–0170
- Rule 3, Form U–3A3–1, SEC File No. 270–77, OMB Control No. 3235–0160
- Rule 26, SEC File No. 270–78, OMB Control No. 3235–0183
- Rule 44, SEC File No. 270–162, OMB Control No. 3235–0147
- Rule 62, Form U–R–1, SEC File No. 270–166, OMB Control No. 3235–0152
- Rule 88, Form U–13–1, SEC File No. 270–80, OMB Control No. 3235–0182
- Rule 95, Form U–13E–1, SEC File No. 270–74, OMB Control No. 3235–0162
- Form U–7D, SEC File No. 270–75, OMB Control No. 3235–0165

Notice is hereby given that, under the Paperwork Reduction Act of 1995 (44 U.S.C. 3501, *et seq.*), the Securities and Exchange Commission (''Commission'') requests comments on the collections of information summarized below. The Commission has submitted to the Office of Management and Budget requests for extension of the previously approved collections of information discussed below.

Rules 1(a) and 1(b) [17 CFR 250.1(a), 250.1(b)] and Forms U5A and U5B [17 CFR 259.5a, 259.5b] implement Sections 5(a) and 5(b) of the Public Utility Holding Company Act of 1935, as amended (''Act'') which require any holding company or any person proposing to become a holding company to file with the Commission a notification of registration and registration statement, respectively. The information is necessary for the Commission to determine whether a new registrant is in compliance with the requirements of the Act. The initial burden of this requirement is approximately 80 hours per respondent. Thereafter there is no annual burden. The Commission has been receiving four filings each year, with a total annual burden of 320 hours. Companies filing under this rule are required to retain records for a period of 10 years, and provision of the information is mandatory. The retention time period allows the Commission the opportunity to perform its audit functions. Responses are not kept confidential.

Rule 3 [17 CFR 250.3] permits a bank that is also a public utility holding company to claim an exemption from the requirements of the Act, through the submission of an annual statement on Form U–3A3–1 [17 CFR 259.403]. The rule and the form are used by the Commission staff to expedite its review of compliance with Section 3(a)(4) of the Act. Rule 3 and Form U–3A3–1 permit a bank that is also a public utility holding company to avoid the burdens associated with an application for an exemption from the requirements of the Act. An application for an exemption would involve a formal order, which might require an administrative hearing and which otherwise would consume a significant amount of Commission resources. Each year the Commission receives five submissions from banks; each takes about two hours to complete. Thus a total annual burden of ten hours is imposed. Provision of this information is required. Banks that file under this rule are required to retain records for a period of ten years. This retention period is consistent with requirements imposed by federal agencies that regulate banks. Banks are

allowed to request confidential treatment of information filed under this rule.

Rule 26 [17 CFR 250.26] sets forth the financial statement and recordkeeping requirements for registered holding companies and their subsidiaries. This information collection is of fundamental importance to the Commission in the review of financial statements of registered public utility holding companies. The Commission reviews financial statements in connection with its review of proposals submitted for approval under several provisions of the Act. Provision of this information is required. The rule imposes no annual burden because there is no form, as such, under Rule 26 and because the information is required for Form U5S, which is subject to separate OMB review. In addition, there is no requirement for record retention under this rule.

Rule 44 [17 CFR 250.44] prohibits sales of utility securities or of utility assets owned by registered public utility holding companies, not otherwise exempt under Commission regulations, except under a declaration that notifies the Commission of the proposed sale and that becomes effective. The information is essential to Commission administration of Section 12(d) of the Act and is not otherwise available. The Commission analyzes the information to determine if the proposed sale is consistent with the public interest. Provision of this information is required. The rule imposes a burden of about 96 hours each year on 4 respondents, each of which makes one submission. There is no requirement for record retention under this rule. Submissions are not kept confidential.

Rule 62 [17 CFR 250.62] prohibits the solicitation of authorization regarding any security of a regulated company in connection with reorganization subject to Commission approval or regarding any transaction which is the subject of an application or declaration, except under a declaration regarding the solicitation which has become effective. The information is necessary to permit the Commission to adequately enforce Sections 12(e) and 11(g) of the Act. The rule and Form U–R–1 [17 CFR 259.221] impose a total annual burden of 35 hours on 7 companies, who each spend 5 hours, and file as necessary.

Rule 88 [17 CFR 250.88] requires the filing of Form U–13–1 [17 CFR 259.113] for a mutual or subsidiary service company performing services for affiliate companies of a holding company system. Twenty-two respondents initially spend a total of approximately eighty-eight hours meeting this requirement. Thereafter, there is no annual burden. Service companies filing under this rule are required to retain records for a period of 10 years, and provision of the information is mandatory. The retention time period allows the Commission the opportunity to perform its audit functions. Responses are not kept confidential.

Rule 95 [17 CFR 250.95] requires service companies to file reports on Form U–13E–1 [17 CFR 259.213] with the Commission prior to their performance of contracts for registered holding companies or their subsidiaries, for services, construction, or sales of goods. The Commission requires this information to enforce the provisions of Section 13(e) and of Section 13(f) of the Act. The enforcement of these statutes would be compromised without the collection of this information, which is not available from other sources. Provision of this information is required. Companies that file under this rule are required to retain records for a period of six years. This retention period allows the Commission to perform its audit functions. One company meets this requirement on an annual basis with an estimated average burden of 2 hours. This information is not kept confidential.

Form U–7D [17 CFR 259.404] establishes the filing company's right to the exemption authorized for financing entities holding title to utility assets leased to a utility company. The information is necessary for the Commission to determine whether a company is exempt from, or governed by, the Act. The form imposes a total annual burden of 72 hours on 24 respondents, who each spend 3 hours annually preparing and filing 1 response. Companies filing under this rule are required to retain records for a period of 10 years, and provision of the information is mandatory. The retention time period allows the Commission the opportunity to perform its audit functions, and generally coincides with companies' obligation period under their respective leases. Responses are not kept confidential.

The estimates of average burden hours are made for the purposes of the Paperwork Reduction Act and are not derived from a comprehensive or even a representative survey or study of the costs of Commission rules and forms.

It should be noted that an agency may not conduct or sponsor, and a person is not required to respond to, a collection of information unless it displays a currently valid control number.

Please direct your written comments to the following persons: (i) Desk Officer for the Securities and Exchange Commission, Office of Information and Regulatory Affairs, Office of Management and Budget, New Executive Office Building, Washington, D.C. 20503; and (ii) Michael E. Bartell, Associate Executive Director, Office of Information Technology, Securities and Exchange Commission, 450 5th Street, N.W. Washington, DC 20549. Comments must be submitted to OMB within 30 days of this notice.

Dated: September 5, 2000.

Margaret H. McFarland,

Deputy Secretary.

[FR Doc. 00–23562 Filed 9–13–00; 8:45 am]

BILLING CODE 8010–01–M

SECURITIES AND EXCHANGE COMMISSION

[Release No. 34–43252; File No. SR–AMEX–00–50]

Self-Regulatory Organizations; Notice of Filing and Immediate Effectiveness of Proposed Rule Change by the American Stock Exchange LLC Relating to Its Policy Prohibiting Harassment, Intimidation, ''Refusals To Deal'' and Retaliation

September 6, 2000.

Pursuant to Section 19(b)(1) of the Securities Exchange Act of 1934 (''ACT'')[1] and Rule 19b–4 thereunder,[2] notice is hereby given that on September 5, 2000, the American Stock Exchange LLC (''Amex'' or ''Exchange'') filed with the Securities and Exchange Commission (''Commission'') the proposed rule change as described in Items I, II, and III below, which Items have been prepared by the Exchange. The proposed rule change has been filed by the Amex as a ''non-controversial'' rule change under Rule 19b–4(f)(6) of the Act.[3] The Commission is publishing this notice to solicit comments on the proposed rule change from interested persons.

I. Self-Regulatory Organization's Statement of the Terms of Substance of the Proposed Rule Change

The Exchange proposes to codify in Commentary to Amex Rule 16, its long standing policy prohibiting harassment,

[1] 15 U.S.C. 78s(b)(1).

[2] 17 CFR 240.19b–4.

[3] 17 CFR 240.19b–4(f)(6). At the Exchange's request, the original filing, received by the Commission on August 24, 2000, will be treated as the pre-filing required under this paragraph of the rules. Telephone conversation between Claire McGrath, Vice President and Special Counsel, Derivative Securities, Amex, and Deborah Flynn, Senior Special Counsel, Division of Market Regulation, Commission, on September 6, 2000.

intimidation, ''refusals to deal'' and retaliation.

The text of the proposed rule change is available at the AMEX and at the Commission.

II. Self-Regulatory Organization's Statement of the Purpose of, and Statutory Basis for, the Proposed Rule Change

In its filing with the Commission, the Amex included statements concerning the purpose of and basis for the proposed rule change and discussed any comments it received on the proposed rule change. The text of these statements may be examined at the places specified in Item IV below. The Amex has prepared summaries, set forth in Sections A, B, and C below, of the most significant aspects of such statements.

A. Self-Regulatory Organization's Statement of the Purpose of, and Statutory Basis for, the Proposed Rule Change

1. Purpose

The Exchange has long interpreted Article V, Section 4 of the Amex Constitution and Rule 16 to prohibit harassment, intimidation, ''refusals to deal'' and retaliation by and against members and their employees. Rule 16 and Article V, Section 4 of the Amex Constitution require members to observe the principles of good business practices and just and equitable principles of trade. Pursuant to this interpretation, the Exchange issued a Floor Member Circular on August 24, 1998 regarding the appropriate interaction of specialists, registered options traders and floor brokers on the trading floor.[4] The Circular concluded ''* * * any attempts to harass, intimidate or unduly influence members of a trading crowd by any Exchange member will not be tolerated and will be referred to the Exchange's Enforcement Division for appropriate disciplinary action.'' The Exchange has brought disciplinary actions against members pursuant to this Circular. However, although such conduct is already prohibited and the Exchange will continue to bring disciplinary actions against members pursuant to the Circular, the Exchange has determined to codify this interpretation in Commentary .01 to Amex Rule 16 in order to emphasize the importance placed by the Exchange on the enforcement of the prohibition.

The interpretation codified in new Commentary .01 to Amex Rule 16 states that it is conduct inconsistent with just and equitable principles of trade for any member or employee of a member to engage, directly, or indirectly, in any conduct that threatens, harasses, intimidates, constitutes a ''refusal to deal'' or retaliates against any member or employee of a member because: (i) Such member or employee has made a proposal to any exchange or other market to list or trade any option class; (ii) of such member's or employee's advocacy of or proposals concerning the listing or trading of an option class on any exchange or other market; (iii) such member or employee has commenced making a market in or trading any option class on any exchange or other market; (iv) such member or employee seeks to increase the capacity of any options exchange or the options industry to disseminate quote or trade data; (v) such member or employee seeks to introduce new option products; or (vi) such member or employee acts, or seeks to act, competitively.

The Exchange believes the prohibited conduct discussed in this new interpretation is fundamentally inconsistent with the obligations of members to their customers and is inimical to the public interest in fair and efficient options markets.[5]

2. Statutory Basis

The Exchange believes that the proposed rule change is consistent with Section 6(b) of the Act,[6] in general, and furthers the objectives of Section 6(b)(5)[7] in particular, in that it is designed to prevent fraudulent and manipulative acts and practices and to promote just and equitable principles of trade.

B. Self-Regulatory Organization's Statement on Burden on Competition

The Exchange does not believe that the proposed rule change will impose any burden on competition.

C. Self-Regulatory Organization's Statement on Comments on the Proposed Rule Change Received From Members, Participants, or Others

Written comments were neither solicited nor received.

III. Date of Effectiveness of the Proposed Rule Change and Timing for Commission Action

The proposed rule change has been filed by the Exchange as a ''non-controversial'' rule change pursuant to Section 19(b)(3)(A) of the Act[8] and Rule 19b–4(f)(6) thereunder.[9] Because the foregoing proposed rule change: (1) Does not significantly affect the protection of investors or the public interest, (2) does not impose any significant burden on competition, and (3) by its terms does not become operative for 30 days after the date of this filing, or such shorter time as the Commission may designate,[10] it has become effective pursuant to Section 19(b)(3)(A)[11] of the Act and Rule 19b–4(f)(6)[12] thereunder. At any time within 60 days of the filing of the proposed rule change, the Commission may summarily abrogate such rule change if it appears to the Commission that such action is necessary or appropriate in the public interest, for the protection of investors, or otherwise in furtherance of the purposes of the Act.

IV. Solicitation of Comments

Interested persons are invited to submit written data, views, and arguments concerning the foregoing, including whether the proposed rule change is consistent with the Act. Persons making written submissions should file six copies thereof with the Secretary, Securities and Exchange Commission, 450 Fifth Street, NW., Washington, DC 20549–0609. Copies of the submission, all subsequent amendments, all written statements with respect to the proposed rule change that are filed with the Commission, and all written communications relating to the proposed rule change between the Commission and any person, other than those that may be withheld from the public in accordance with the provisions of 5 U.S.C. 552, will be available for inspection and copying at the Commission's Public Reference Room. Copies of such filing will also be available for inspection and copying at the principal office of the Exchange. All

[4] *See* Floor Member Circular #98–760.

[5] According to the Amex, it has also been Exchange policy that its employees, Governors, committee members, agents and other officials are also prohibited from harassing, intimidating, refusing to deal and retaliating against members or other market participants. Since the proposed Commentary to Amex Rule 16 will apply only to those persons and organizations under Exchange jurisdiction (*i.e.* members and their employees), the Exchange has revised its employee Code of Conduct and Statements of Fiduciary Responsibilities for Governors and Committee Members to include the same interpretation.

[6] 15 U.S.C. 78f(b).

[7] 15 U.S.C. 78f(b)(5).

[8] 15 U.S.C. 78f(b)(3)(A).

[9] 17 CFR 240.19b–4(F)(6).

[10] The Commission hereby waives the requirement that the proposed rule change not become operative for 30 days and the rule is, therefore, immediately effective and operative. For purposes only of accelerating the operative date of this proposal, the Commission has considered has considered the proposed rule's impact on efficiency, competition, and capital formation. 15 U.S.C. 78c(f).

[11] 15 U.S.C. 78s(b)(3)(A).

[12] CFR 240.19b–4(f)(6).

submissions should refer to the File No. SR–AMEX–00–50 and should be submitted by October 5, 2000.

For the Commission, by the Division of Market Regulation, pursuant to delegated authority.[13]

Margaret H. McFarland,

Deputy Secretary.

[FR Doc. 00–23565 Filed 9–13–00; 8:45 am]

BILLING CODE 8010–01–M

SECURITIES AND EXCHANGE COMMISSION

[Release No. 34–43253; File No. SR–AMEX–00–52]

Self-Regulatory Organizations; Notice of Filing and Immediate Effectiveness of Proposed Rule Change by the American Stock Exchange LLC Relating to its Policy Prohibiting Harassment, Intimidation, ''Refusals to Deal'' and Retaliation

September 6, 2000.

Pursuant to Section 19(b)(1) of the Securities Exchange Act of 1934 (''Act'')[1] and Rule 19b–4 thereunder,[2] notice is hereby given that on September 5, 2000, the American Stock Exchange LLC (''Amex'' or ''Exchange'') filed with the Securities and Exchange Commission (''Commission'') the proposed rule change as described in Items I, II, and III below, which Items have been prepared by the Exchange. The Commission is publishing this notice to solicit comments on the proposed rule change from interested persons.

I. Self-Regulatory Organization's Statement of the Terms of Substance of the Proposed Rule Change

The Exchange proposes to file with the Commission its statements on Fiduciary Responsibilities of the Members of the Board of Governors, Fiduciary Responsibilities of Committee Members and Floor Officials and Employee Code of Ethics.

The text of the proposed rule change is available at the Amex and at the Commission.

II. Self-Regulatory Organization's Statement of the Purpose of, and Statutory Basis for, the Proposed Rule Change

In its filing with the Commission, the Amex included statements concerning the purpose of and basis for the proposed rule change and discussed any comments it received on the proposed rule change. The text of these statements may be examined at the places specified in Item IV below. The Amex has prepared summaries, set forth in Sections A, B, and C below, of the most significant aspects of such statements.

A. Self-Regulatory Organization's Statement of the Purpose of, and Statutory Basis for, the Proposed Rule Change

1. Purpose

The Exchange has long insisted that the Members of its Board of Governors, its committee members, employees, officers, directors and other officials or agents observe the highest standards of business ethics and fair dealings. The Exchange prohibits its Governors, committee members, floor officials, agents, and employees from engaging, directly or indirectly, in any conduct that threatens, harasses, intimidates, constitutes a ''refusal to deal'' or retaliates against any member, employee of a member or any other market participant.

The Exchange is now proposing to file with the Commission its statements on Fiduciary Responsibilities of the Members of the Board of Governors, Fiduciary Responsibilities of Committee Members and Floor Officials and Employee Code of Ethics which reflect its policy prohibiting its Governors, committee members, employees, officers, directors and other officials or agents from engaging, directly or indirectly, in any conduct that threatens, harasses, intimidates, constitutes a ''refusal to deal'' or retaliates against any member, employee of a member or any other market participant because: (i) Such member, employee or market participant has made a proposal to any exchange or other market to list or trade any option class; (ii) of such member's or employee's advocacy of or proposals concerning the listing or trading of an option class on any exchange or other market; (iii) such member, employee or market participant has commenced making a market in or trading any option class on any exchange or other market; (iv) such member, employee or market participant seeks to increase the capacity of any options exchange or the options industry to disseminate quote or trade data; (v) such member, employee or market participant seeks to introduce new option products; or (vi) such member, employee or market participant acts, or seeks to act, competitively.

The Exchange believes the prohibited conduct discussed in these statements is fundamentally inconsistent with the obligations of the members of its Board of Governors, committee members, employees, officers, directors and other officials or agents in their responsibilities to the Exchange and is inimical to the public interest in fair and efficient options markets.

2. Statutory Basis

The Exchange believes that the proposed rule change is consistent with Section 6(b) of the Act,[3] in general, and furthers the objectives of Section 6(b)(5)[4] in particular, in that it is designed to prevent fraudulent and manipulative acts and practices and to promote just and equitable principles of trade.

B. Self-Regulatory Organization's Statement on Burden on Competition

The Exchange does not believe that the proposed rule change will impose any burden on competition.

C. Self-Regulatory Organization's Statement on Comments on the Proposed Rule Change Received From Members, Participants, or Others

Written comments were neither solicited nor received.

III. Date of Effectiveness of the Proposed Rule Change and Timing for Commission Action

Because the forgoing proposed rule change is concerned solely with the administration of the self-regulatory organization, it has become effective pursuant to Section 19(b)(3)(A)(iii)[5] of the Act and Rule 19b–4(f)(3)[6] thereunder. At any time within 60 days of the filing of the proposed rule change, the Commission may summarily abrogate such rule change if it appears to the Commission that such action is necessary or appropriate in the public interest, for the protection of investors, or otherwise in furtherance of the purposes of the Act.

IV. Solicitation of Comments

Interested persons are invited to submit written data, views, and arguments concerning the foregoing, including whether the proposed rule change is consistent with the Act. Persons making written submissions should file six copies thereof with the Secretary, Securities and Exchange Commission, 450 Fifth Street, NW., Washington, DC 20549–0609. Copies of the submission, all subsequent amendments, all written statements with respect to the proposed rule

[13] 17 CFR 200.30–3(a)(12).

[1] 15 U.S.C. 78s(b)(1).

[2] 17 CFR 240.19b–4.

[3] 15 U.S.C. 78f(b).

[4] 15 U.S.C. 78f(b)(5).

[5] 15 U.S.C. 78s(b)(3)(A)(iii).

[6] 17 CFR 240.19b–4(f)(3).

change that are filed with the Commission, and all written communications relating to the proposed rule change between the Commission and any person, other than those that may be withheld from the public in accordance with the provisions of 5 U.S.C. 552, will be available for inspection and copying at the Commission's Public Reference Room. Copies of such filing will also be available for inspection and copying at the principal office of the Exchange. All submissions should refer to the File No. SR–AMEX–00–52 and should be submitted by October 5, 2000.

For the Commission, by the Division of Market Regulation, pursuant to delegated authority.[7]

Margaret H. McFarland,

Deputy Secretary.

[FR Doc. 00–23566 Filed 9–13–00; 8:45 am]

BILLING CODE 8010–01–M

SECURITIES AND EXCHANGE COMMISSION

[Release No. 43255; File No. SR–BSE–00–11]

Self-Regulatory Organizations; Notice of Filing and Immediate Effectiveness of Proposed Rule Change by the Boston Stock Exchange, Inc., Amending Its Rules to Accommodate Price Quotations in Decimals

September 6, 2000.

Pursuant to Section 19(b)(1) of the Securities Exchange Act of 1934 (''Act'')[1] and Rule 19b–4 thereunder,[2] notice is hereby given that on August 7, 2000, the Boston Stock Exchange, Inc. (''BSE'' or ''Exchange''), filed with the Securities and Exchange Commission (''Commission'') the proposed rule change as described in Items I, II, and III below, which Items have been prepared by the BSE. On September 5, 2000, the BSE submitted Amendment No. 1 to the proposal to make certain technical corrections in the amended rule language.[3] The BSE has filed the proposal pursuant to Section 19(b)(3)(A) of the Act,[4] and Rule 19b–4(f)(6) thereunder,[5] which renders the proposal effective upon filing with the Commission. The Commission is publishing this notice to solicit comments on the proposed rule change from interested persons.

I. Self-Regulatory Organization's Statement of the Terms of Substance of the Proposed Rule Change

The Exchange proposes to amend its Rules to provide for the implementation of decimal pricing. The BSE believes the proposed rule change conforms to the uniform industry approach to implementing decimal pricing contained in the joint submission to the Commission by the BSE and other interested parties dated July 24, 2000, and entitled ''Decimals Implementation Plan for the Equities and Options Markets'' (''Decimals Plan''). The text of the proposed rule change is set forth below. Proposed new language appears in italics; proposed deletions appear in brackets.

* * * * *

Chapter II

Dealings on the Exchange

Orders to Buy and Sell the Same Security

Section 18. When a member has an order to buy and an order to sell the same security, he shall audibly offer such security, if bonds at ⅛ of 1%, and if stocks, at the *approved* [m]*M*inimum *Price* [v] *V*ariation *(''MPV'')*[permitted]*(as defined in Chapter II, Section 41),* higher than his bid before making a transaction with himself.

Minimum Price Variation

Section 41. For securities which trade in decimals, the Minimum Price Variation shall be 0.01, and for the remaining period until the decimals conversion is completed, those securities trading in fractions shall continue to trade in Minimum Price Variations as currently approved by the Exchange.

* * * * *

Chapter XVII

Members Dealing for Own Account

Make offering above his bid

(b) A member may take the securities named in the order provided (1) he shall have offered the same in the open market at a price which is higher than his bid by ⅛ of 1% if bonds, and by [⅛ of one dollar if stocks] *the approved Minimum Price Variation (''MPV'') (as defined in Chapter II, Section 41) if stocks*, (2) the price is justified by the condition of the market, and (3) the member, if any, who gave the order shall directly, or through a broker authorized to act for him, after prompt notification, accept the trade;

Make bid below his offer

(c) A member may supply the securities named in the order, provided (1) he shall have bid for the same in the open market at a price which is lower than his offer by ⅛ of 1% if bonds, and by [⅛ of one dollar if stocks] *the approved Minimum Price Variation (''MPV'') (as defined in Chapter II, Section 41) if stocks*, (2) the price is justified by the condition of the market, and (3) the member, if any, who gave the order shall directly, or through a broker authorized to act for him, after prompt notification, accept the trade;

* * * * *

Chapter XXIV

Portfolio Depositary Receipts

Initial and Continued Listing and/or Trading

Section 5.

Interpretation and Policies:

10. The [minimal fractional variation] *the approved Minimum Price Variation (''MPV'')* for dealings in SPDRs and MidCap SPDRs shall be 1/64 of $1.00, *until such time as the primary market conversion to decimals begins, after which the MPV shall be as defined in Chapter II, Section 41.*

* * * * *

Chapter XXIV–B

Index Fund Shares

Section 5.

Interpretation and Policies:

.01 (e) [Minimal Fractional Trading Variation] *the approved Minimum Price Variation (''MPV'').* The [minimal fractional trading variation] *approved MPV* may vary among different series of Index Fund Shares but will be set at 1/16th, 1/32nd, or 1/64th of $1.00, *until such time as the primary market conversion to decimals begins, after which the MPV shall be as defined in Chapter II, Section 41.*

.05 The [minimum fractional trading variation] *approved Minimum Price Variation (''MPV'')* will be 1/16th of $1.00 for iShares MSCI and 1/64th of $1.00 for Select Sector SPDRs, *until such time as the primary market conversion to decimals begins, after which the MPV shall be as defined in Chapter II, Section 41.*

* * * * *

[7] 17 CFR 200.30–3(a)(12).

[1] 15 U.S.C. 78s(b)(1).

[2] 17 CFR 240.19b–4.

[3] *See* letter from John Boese, Assistant Vice President, Rule Development and Market Structure, Boston Stock Exchange, Incorporated, to Alton Harvey, Office Chief, Division of Market Regulation, Securities and Exchange Commission, dated September 1, 2000.

[4] 15 U.S.C. 78s(b)(3)(A).

[5] 17 CFR 240.19b–4(f)(6).

Chapter XXXI

Intermarket Trading System

Section 3.

(a)(I)(A)(i) * * *

Security	Consolidated closing price	Applicable Price Change $ (More Than)
Network A	Under $15	⅛ point, *or for stocks trading in decimals, .10*
	$15 or over[*]	¼ point, *or for stocks trading in decimals, .25*
Network B	Under $5	⅛ point, *or for stocks trading in decimals, .10*
	$5 or over[*]	¼ point, *or for stocks trading in decimals, .25***

* If the previous day's consolidated closing price of [an] *a Network A* Eligible [Listed] Security exceeded $100 and the Security does not underlie an individual stock option contract listed and currently trading on a national securities exchange, the ''applicable price change'' is [one point] *one dollar.*

*** If the previous day's consolidated closing price of a Network B Eligible Security exceeded $75 and the Security is not Portfolio Deposit Receipts, Index Fund Shares, or Trust Issued Receipts, or does not underlie an individual stock option contract listed and currently trading on a national securities exchange, the ''applicable price change'' is one dollar.*

(C) indicate the ''applicable price range'' by being formatted as a standardized pre-opening administrative message as follows:

X/XYZ {RANGE}

The price range shall not exceed the ''applicable price range'' shown below:

Security	Consolidated closing price	Applicable price, range $
Network A	Under $50	½ point, *or for stocks trading in decimals, .50.*
	$50 or over[*]	1 point, *or for stocks trading in decimals, 1.00.**
Network B	Under $10	½ point, *or for stocks trading in decimals, .50.*
	$10 or over	1 point, *or for stocks trading in decimals, 1.00.***

*If the previous day's consolidated closing price of [an] *a Network A Eligible [Listed] Security* exceed $100 and the Security does not underlie an individual stock option contract listed and currently trading on a national securities exchange, the ''applicable price change'' is two [points] *dollars.*

***If the previous day's consolidated closing price of Network B Eligible Security exceeded $75 and the Security is not Portfolio Deposit Receipts, Index Fund Shares, or Trust Issued Receipts, or does not underline an individual stock option contract listed and currently trading on a national securities exchange, the ''applicable price change'' is two dollars.*

The price range also shall not straddle the previous day's consolidated closing price, although it may include it as an endpoint (e.g., a ⅛–⅝ *, or for stocks trading in decimals, 40.15–40.65* price range would be permissible if the previous day's consolidated closing price were ⅛ or ⅝*, or for stocks trading in decimals, 40.15 or 40.65,* but not if the closing price were ¼, ⅜ or ½*, or* for stocks trading in decimals, within the price range or 40.16—40.64).

(a)(I)(A)(ii)(B)(ii)

Example: CT closes at 30. Pre-Opening notification set with any one of the following price ranges: 30—30½; 30⅛–30 or 30¼–30¾, or, for stocks trading in decimals, a price range of 30–30.64; 30.10–30.74; or 30.25–30.87.* It is then determined that the stock will open st at 29¾ or 29⅞*, or, for stocks trading in decimals, a price within the range of 29.75 to 29.99.* Under paragraph (3)(a)(I)(A)(ii)(B)(i), the specialist ''shall'' send a cancellation notification. If it is subsequently determined that the stock will open a 30, 30⅛, or 30¼*, or,* for stocks trading in decimals, a price within a range of 30 to 30.25, the specialist need not reindicate the stock pursuant to paragraph (3)(a)(I)(A)(ii)(B)(ii).

(C) Participation as Principal Precluded (''Second Look'')—If a responding market-marker, who has shown in his pre-opening response interest as principal at a price better than the anticipated opening price, would be precluded from participation as principal in the opening transaction (*e.g.* his responding principal interest is to sell at a price⅛ or more*, or,* for stocks trading in decimals, .01 or more below the opening price established by paid agency orders), the specialist shall send a ''second look'' notification through the System notifying such responding market-maker of the price and size a which he participate as principle (i.e., in the parenthetical example above, the total amount of the security that he would have to sell the [⅛—]better price to permit the opening transaction to occur at that price). (b)(i)(C) show the specialist's interest (if any), both as a principal for his own account (''P'') and as agent for orders left with him (''A''), at each price level within the price range indicated in the pre-opening notification (*e.g.,* 40⅜*, or, for stocks trading in decimals, 40.40)*, reflected on a netted share basis by being formatted as a standardized pre-opening administrative message as follows:

RES X/XYZ BUY {SELL} A–P 40⅜ *(or, for stocks trading in decimals, 40.40)*

* * * * *

II. Self-Regulatory Organization's Statement of the Purpose of, and Statutory Basis for, the Proposed Rule Change

In its filing with the Commission, the Exchange included statements concerning the purpose of and basis for the proposed rule change and discussed any comments it received regarding the proposed rule change. The text of these statements may be examined at the places specified in Item IV below. The Exchange has prepared summaries, set forth in Section A, B, and C below, of the most significant aspects of such statements.

a. Self-Regulatory Organization's Statement of the Purpose of, and Statutory Basis for, the Proposed Rule Change

1. Purpose

The Commission has ordered the securities and other interested parties to implement decimal pricing in their markets.[6] Pursuant to that Order, the Commission has required the exchanges

[6] Securities Exchange At Release No. 4214 (June 8, 2000), 65 FR 38010 (June 19, 2000).

to submit proposed rule changes implementing a uniform decimals phase-in schedule. As described above, the Exchange is proposing to amend the following rules in conjunction with the securities industry's conversion or its markets to decimal pricing: Chapter II, Section 18; Chapter XVII, Sections (b) and (c); Chapter XXIV, Section 5, Interpretation and Policies, Paragraph.10; Chapter XXIV–B, Section 5, Interpretation and Policies, Paragraphs .01(e) and .05; and Chapter XXXI Intermarket Trading System (in accordance with the Operating Committee's determination on this matter), Section 3. The Exchange also proposes to add Chapter II, Section 41, *Minimum Price Variation* (of.01).

2. Statutory Basis

The BSE believes that the proposal is consistent with the provisions of Section 6(b)(5)[7] of the Act which requires that an exchange have rules that are designed to prevent fraudulent and manipulative acts and practices, to promote just and equitable principles of trade, to foster cooperation and coordination with persons engaged in regulating, clearing, settling, processing information with respect to, and facilitating transactions in securities, to remove impediments to and perfect the mechanism of a free and open market and a national system and, in general, to protect investors and the public interest.

B. Self-Regulatory Organization's Statement on Burden on Competition

The Exchange does not believe that the proposed rule change will impose any burden on competition that is not necessary or appropriate in furtherance of the purposes of the Act.

C. Self-Regulatory Organization's Statement on Comments on the Proposed Rule Change Received from Members, Participants, or Others

Written comments were neither solicited nor received with respect to the proposed rule change.

III. Date of Effectiveness of the Proposed Rule Change and Timing for Commission Action

Because the foregoing proposed rule change does not:

(i) Significantly affect the protection of investors or the public interest;

(ii) Impose any significant burden on competition; and

(iii) Become operative for 30 days from the date on which it was filed, or such shorter time as the Commission may designate, it has become effective pursuant to Section 19(b)(3)(A) of the Act[8] and Rile 19b–4(f)(6) thereunder.[9] At any time within 60 days of the filing of the proposed rule change, the Commission may summarily abrogate such rule change if it appears to the Commission that such action is necessary or appropriate in the public interest, for the protection of investors, or otherwise in furtherance of the purposes of the Act.[10]

The BSE has requested that the Commission accelerate the operative date. The Commission believes that it is consistent with the protection of investors and the public interest and therefore finds good cause to designate the proposal to become immediately operative upon filing.[11] Acceleration of the operative date will ensure that the BSE is able to operate in accordance with the terms and conditions of the Decimals Plan. For these reasons, the Commission finds good cause to designate that the proposal become operative immediately upon filing.[12]

IV. Solicitation of Comments

Interested persons are invited to submit written data, views and arguments concerning the foregoing, including whether the proposed rule change is consistent with the Act. Persons making written submissions should file six copies thereof with the Secretary, Securities and Exchange Commission, 450 Fifth Street, N.W., Washington, DC 20549–0609. Copies of the submission, all subsequent amendments, all written statements with respect to the proposed rule change that are filed with the Commission, and all written communications relating to the proposed rule change between the Commission and any person, other than those that may be withheld from the public in accordance with the provisions of 5 U.S.C. 552, will be available for inspection and copying in the Commission's Public Reference Room. Copies of such filing will also be available for inspection and copying at the principal office of the BSE. All submissions should refer to file number SR–BSE–00–11 and should be submitted by October 5, 2000.

For the Commission, by the Division of Market Regulation, pursuant to delegated authority.[13]

Margaret H. McFarland,

Deputy Secretary.

[FR Doc. 00–23611 Filed 9–13–00; 8:45 am]

BILLING CODE 8010–01–M

[7] 15 U.S.C. 78f(b)(5).

[8] 15 U.S.C. 78s(b)(3)(A).

[9] 17 CFR 240.19b–4(f)(6).

[10] In reviewing this proposal, the Commission has considered the proposal's impact on efficiency, competition, and capital formation. 15 U.S.C. 78c(f).

[11] The Decimals Plan provides for minimum price variations for equities and options of no less than one cent. The Commission's June 8th Order requires the Participants to submit joint or individual studies two months after Full Implementation (as defined in the Plan) regarding the impact of decimal pricing on systems capacity, liquidity, and trading behavior, including an analysis of whether there should be a uniform minimum quoting increment. If a Participant wishes to move to quoting in an increment of less than one cent, the Participant should include in its study a full analysis of the potential impact of such trading on the Participant's market and the markets as a whole. Within thirty days after submitting the study, and absent Commission action, the Participants individually must submit for notice, comment, and Commission action, proposed rule changes under Section 19(b) of the Exchange Act to establish their individual choice of minimum increments by which equities or options are quoted on their respective markets.

[12] For purposes only of accelerating the operative date of this proposal, the Commission has considered the proposed rule's impact on efficiency, competition, and capital formation. 15 U.S.C. 78c(f).

[13] 17 CFR 200.30–3(a)(12).

SECURITIES AND EXCHANGE COMMISSION

[Release No. 34–43251; File No. SR–CBOE–00–45]

Self-Regulatory Organizations; Notice of Filing and Immediate Effectiveness of Proposed Rule Change by the Chicago Board Options Exchange, Incorporated Amending its Code of Conduct to Elaborate Its Existing Policy Prohibiting Harassment and Other Improper Conduct

September 6, 2000.

Pursuant to Section 19(b)(1) of the Securities Exchange Act of 1934 (''Act''),[1] and Rule 19b–4 thereunder,[2] notice is hereby given that on September 6, 2000, the Chicago Board Options Exchange, Incorporated (''CBOE'' or ''Exchange'') filed with the Securities and Exchange Commission (''Commission'') the proposed rule change as described in Items I, II, and III below, which Items have been prepared by the CBOE. The Commission is publishing this notice to solicit comments on the proposed rule change from interested persons.

I. Self-Regulatory Organization's Statement of the Terms of Substance of the Proposed Rule Change

CBOE proposes to amend its Code of Conduct (''Employee Handbook'') to elaborate its existing policy prohibiting harassment and other improper conduct. The text of the proposed rule

[1] 15 U.S.C. 78s(b)(1).

[2] 17 CFR 240.19b–4.

change is available at CBOE and at the Commission.

II. Self-Regulatory Organization's Statement of the Purpose of, and Statutory Basis for, the Proposed Rule Change

In its filing with the Commission, CBOE included statements concerning the purpose of and basis for the proposed rule change and discussed any comments it received on the proposed rule change. The text of these statements may be examined at the places specified in Item IV below. CBOE has prepared summaries, set forth in Sections A, B, and C below, of the most significant aspects of such statements.

A. Self-Regulatory Organization's Statement of the Purpose of, and Statutory Basis for, the Proposed Rule Change

1. Purpose

The purpose of the proposed change is to elaborate the Exchange's existing policy prohibiting harassment and other improper conduct by CBOE employees and certain non-employees including harassment directed against any member or other market participant for acting or seeking to act competitively, or in connection with a listing proposal made by such member or market participant. Although the Exchange believes that these prohibitions are encompassed within the Exchange's extensive Employee Handbook provisions dealing with harassment and other improper employee conduct, the Exchange seeks to provide expressly in its Employee Handbook that such specific conduct is prohibited and against CBOE policy. The Exchange believes that codifying the policy in the Employee Handbook will serve to highlight the policy to CBOE employees and non-employees and reinforce the Exchange's prohibition on any such anti-competitive conduct.

Specifically, the added language will explicitly provide that it is against CBOE policy for any employee, officer, director, committee member, and other official or agent of CBOE to harass, threaten, intimidate, or retaliate against any member of CBOE or any other market participant for acting, or seeking to act, competitively, or because of a listing proposal made by such member or market participant to any exchange or other market, or such member's or market participant's advocacy or proposal concerning listing or trading on any exchange or market, or such member or market participant making markets in or trading any option on any exchange or other market.

This change compliments a recently adopted rule change submitted by the Exchange concerning a similar prohibition on COBE members. [3]

2. Statutory Basis

The Exchange believes that, because the proposed rule change will elaborate the Exchange's long-standing policy regarding the Exchange's prohibition against harassment and other similar practices, by employees and other non-members, the proposed change is consistent with Section 6 of the Act,[4] in general, furthers the objectives of Section 6(b)(5) [7] in particular, in that it is designed to prevent fraudulent and manipulative acts and practices and to promote just and equitable principles of trade.

B. Self-Regulatory Organization's Statement on Burden on Competition

The CBOE does not believe that the proposed change will impose any burden on competition not necessary or appropriate in furtherance of the purposes of the Act.

C. Self-Regulatory Organization's Statement on Comments on the Proposed Rule Change Received from Members, Participants, or Others

The Exchange has neither solicited nor received written comments with respect to the proposed change.

III. Date of Effectiveness of the Proposed Rule Change and Timing for Commission Action

The foregoing proposed rule change is concerned solely with the administration of the Exchange. Therefore, the proposed rule change has become effective pursuant to Section 19(b)(3)(A)(iii) of the Act [6] and Rule 19b–4(f)(3) thereunder. [7] At any time within 60 days of the filing of such proposed rule change, the Commission may summarily abrogate such rule change if it appears to the Commission that such action is necessary or appropriate in the public interest, for the protection of investors, or otherwise in furtherance of the purposes of the Act.

IV. Solicitation of Comments

Interested persons are invited to submit written data, views and arguments concerning the foregoing, including whether the proposed whether the proposed change is consistent with the Act. Persons making written submissions should file six copies thereof with the Secretary, Securities and Exchange Commission, 450 Fifth Street, NW., Washington, DC 20549–0609. Copies of the submission, all subsequent amendments, all written statements with respect to the proposed rule change that are file with the Commission, and all written communications relating to the proposed rule change between the Commission and any person, other than those that may be withheld from the public in accordance with the provisions of 5 U.S.C. 552, will be available for inspection and copying in the Commission's Public Reference Room. Copies of such filing will also be available for inspection and copying at the principal office of CBOE. All submissions should refer to File No. SR–CBOE–00–45 and should be submitted by October 5, 2000.

For the Commission, by the Division of Market Regulataion, pursuant to delegated authority.[8]

Margaret H. McFarland,

Deputy Secretary.

[FR Doc. 00–23612 Filed 9–13–00; 8:45 am]

BILLING CODE 8010–01–M

[3] *See* Securities Exchange Act Release No. 43227 (August 30, 2000).

[4] 15 U.S.C. 78f.

[5] 15 U.S.C. 78f(b)(5).

[6] 15 U.S.C. 78s(b)(3)(A)(iii).

[7] 17 CFR 240.19b–4(f)(3).

[8] 17 CFR 200.30–(a)(12).

SECURITIES AND EXCHANGE COMMISSION

[Release No. 34–43256; File No. SR–CHX–00–25]

Self-Regulatory Organizations; Notice of Filing and Immediate Effectiveness of a Proposed Rule Change and Amendment Nos. 1, 2, and 3 by The Chicago Stock Exchange, Incorporated Relating to the Securities Industry's Transition to Decimal Pricing

September 6, 2000.

Pursuant to Section 19(b)(1) of the Securities Exchange Act of 1934 (''Act'')[1] and Rule 19b–4 thereunder,[2] notice is hereby given that on July 28, 2000, the Chicago Stock Exchange, Incorporated (''CHX'' or ''Exchange'') filed with the Securities and Exchange Commission (''Commission'') the proposed rule change, as described in Items I, II, and III below, which Items have been prepared by the CHX. The CHX amended the proposal on August

[1] 15 U.S.C. 78s(b)(1).

[2] 17 CFR 240.19b–4.

7, 2000,[3] August 9, 2000,[4] and August 31, 2000,[5] respectively. The Commission is publishing this notice to solicit comments on the proposed rule change, as amended, from interested persons.

I. Self-Regulatory Organization's Statement of the Terms of Substance of the Proposed Rule Change

The Exchange proposes to amend certain CHX rules to implement the securities industry's Decimals Implementation Plan submitted to the Commission on July 24, 2000. The text of the proposed rule change is available at the Commission and the CHX.

II. Self-Regulatory Organization's Statement of the Purpose of, and Statutory Basis for, the Proposed Rule Change

In its filing with the Commission, the CHX included statements concerning the purpose of, and basis for, the proposed rule change and discussed any comments it received on the proposed rule change. The text of these statements may be examined at the places specified in Item IV below. The CHX has prepared summaries, set forth in sections A, B, and C below, of the most significant aspects of such statements.

A. Self-Regulatory Organization's Statement of the Purpose of, and Statutory Basis for, the Proposed Rule Change

1. Purpose

On June 8, 2000, the Commission issued an order (''Order'')[7] requiring the national securities exchanges and the National Association of Securities Dealers, Inc. (''Participants'') to act jointly in planning, discussing, developing, and submitting to the Commission a plan that will begin phasing in the implementation of decimal pricing in equity securities and options on or before September 5, 2000 (''Plan''). The Commission directed the Participants to submit the Plan to the Commission by July 24, 2000, and further directed each Participant to file the rule changes necessary to implement the phase-in plan.

The Exchange proposes to amend certain CHX rules to implement the Plan. The proposed rule change: (i) Establishes a minimum price variation (''MPV'') of $.01 for issues pricing in decimals; (ii) establishes the procedures that will be used during the conversion from pricing in fractions to pricing in decimals; (iii) conforms CHX Rule 39 to recent amendments to the ITS Plan relating to decimals; and (iv) provides a decimals reference to accompany and, ultimately, replace the fractional references set forth in the current version of certain CHX rules.

Minimum Variation. The Exchange's existing rules set forth the minimum variations for quoting various issues on the Exchange.[6] Proposed Rule 22 establishes a $.01 MPV for all issues quoted in decimals. Proposed Interpretation and Policy .06 to Rule 22 provides that the Exchange may not establish an MPV that is inconsistent with the Plan while the Plan is in effect.[7]

Conversion from Fractional to Decimal Pricing. Proposed Article XXB contains rules relating to the transition from pricing in fractions to pricing in decimals. Specifically, proposed Rule 1 implements the process that will be used to convert open orders from fractions to decimals. Proposed Rule 2 provides that member firms may allow open orders to be converted as provided in Rule 1, or may cancel and re-enter those orders. Proposed Rule 3 describes the conversion-related handling of securities quoted ''ex-dividend,'' ''ex-distribution,'' ''ex-rights'' or ''ex-interest.'' Proposed Rule 4 notes that these conversion rules will automatically expire one month after all issues have been successfully converted to decimals. Finally, proposed Rule 5 provides that securities trading on the Exchange in fractions will be governed by CHX rules relating to fractions and securities trading on the Exchange in decimals will be governed by CHX rules relating to decimals.

ITS Plan. The proposed rule change amends CHX Rule 39 to conform to recent proposed amendments to the ITS Plan relating to decimals.[8]

Decimals References. The remaining proposed changes simply add a decimal reference in applicable CHX rules to supplement the existing fractional references. These proposed changes do not effect any substantive change in the CHX rules or the operations on the Exchange.

2. Statutory Basis

The CHX believes that the proposed rule change is consistent with the requirements of the Act and the rules and regulations thereunder that are applicable to a national securities exchange, and, in particular, with the requirements of Section 6(b) of the Act.[9] In particular, the CHX believes that the proposed rule change is consistent with Section 6(b)(5)[10] in that it is designed to promote just and equitable principles of trade, to remove impediments to and to perfect the mechanism of a free and open market and a national market system, and, in general, to protect investors and the public interest.

B. Self-Regulatory Organization's Statement on Burden on Competition

The CHX does not believe that the proposed rule change will impose any burden on competition not necessary or appropriate in furtherance of the purposes of the Act.

C. Self-Regulatory Organization's Statement on Comments on the Proposed Rule Change Received From Members, Participants, or Others

No written comments were solicited or received with respect to the proposed rule change.

III. Date of Effectiveness of the Proposed Rule Change and Timing for Commission Action

Because the foregoing proposed rule change does not: (1) Significantly affect

[3] *See* Letter dated August 4, 2000, from Ellen J. Neely, Vice President and General Counsel, CHX, to Alton S. Harvey, Office Head, Division of Market Regulation (''Division''), Commission (''Amendment No. 1''). Amendment No. 1 makes certain technical corrections to the proposed rule change, converts the filing to a non-controversial filing under Section 19(b)(3)(A) of the Act and Rule 19b–4(f)(6 thereunder, and requests the Commission to waive the 5 day pre-filing notice requirement and the 30-day operative period. Amendment No. 1 also conforms CHX Rule 39 to recent amendments to the Intermarket Trading System Plan (''ITS Plan'') relating to decimal pricing.

[4] *See* Letter dated August 22, 2000, from Paul B. O'Kelly, Executive Vice President, CHX, to Alton S. Harvey, Office Head, Division, Commission (''Amendment No. 2''). Amendment No. 2 withdraws the portion of Amendment No. 1 that extends CHX Rule 23 to Nasdaq National Market securities.

[5] *See* Letter dated August 30, 2000, from Ellen J. Neely, Vice President and General Counsel, CHX, to Sonia Patton, Attorney, Division, Commission (''Amendment No. 3''). Amendment No. 3 makes certain technical corrections to the proposed rule change.

[7] *See* Securities Exchange Act Release No. 42914 (June 8, 2000), 65 FR 38010 (June 19, 2000).

[6] *See* Article XX, Rule 22 of the CHX rules.

[7] The Plan provides for minimum price variations for equities and options of no less than one cent. The Order requires the Participants to submit joint or individual studies two months after Full Implementation (as defined in the Plan) regarding the impact of decimal pricing on systems capacity, liquidity, and trading behavior, including an analysis of whether there should be a uniform minimum quoting increment. If a Participant wishes to move to quoting in an increment of less than one cent, the Participant should include in its study a full analysis of the potential impact of such trading on the Participant's market and the markets as a whole. Within thirty days after submitting the study, and absent Commission action, the Participants individually must submit for notice, comment, and Commission action, proposed rule changes under Section 19(b) of the Exchange Act to establish their individual choice of minimum increments by which equities or options are quoted on their respective markets.

[8] *See* Amendment No. 1, *supra* n.3.

[9] 15 U.S.C. 78f(b).

[10] 15 U.S.C. 78f(b)(5).

the protection of investors or the public interest; (ii) impose any significant burden on competition; and (iii) become operative on 30 days from the date on which it was filed, or such shorter time as the Commission may designate,[11] it has become effective pursuant to Section 19(b0(3)(A) of the Act [12] and Rule 19b–4(f)(6) [13] thereunder. At any time within 60 days of the filing of the proposed rule change, the Commission may summarily abrogate such rule change if it appears to the Commission that such action is necessary or appropriate in the public interest, for the protection of investors, or otherwise in furtherance of the purposes of the Act.

The CHX has requested that the Commission accelerate the operative date. The Commission believes that it is consistent with the protection of investors and the public interest and therefore finds good cause to designate the proposal to become immediately operative upon filing. Acceleration of the operative date will ensure that the CHX is able to operate in accordance with the terms and conditions of the Plan. For these reasons, the Commission finds good cause to designate that the proposal become operative immediately upon filing.[14]

IV. Solicitation of Comments

Interested persons are invited to submit written data, views and arguments concerning the foregoing, including whether the proposed rule change is consistent with the Act. Persons making written submissions should file six copies thereof with the Secretary, Securities and Exchange Commission, 450 Fifth Street, NW., Washington, DC 20549–0609. Copies of the submission, all subsequent amendments, all written statements with respect to the proposed rule change that are filed with the Commission, and all written communications relating to the proposed rule change between the Commission and any persons, other than those that may be withheld from the public in accordance with the provisions of 5 U.S.C. 552, will be available for inspection and copying in theCommission's Public Reference Room. Copies of such filing will also be available for inspection and copying at the principal office of CHX. All submissions should refer to the File No. SR–CHX–00–25 and should be submitted by October 5, 2000.

For the Commission, by the Division of Market Regulation, pursuant to delegated authority.[15]

Margaret H. McFarland,

Deputy Secretary.

[FR Doc. 00–23614 Filed 9–13–00; 8:45 am]

BILLING CODE 8010–01–M

[11] The Exchange requested the Commission to waive 5 day pre-filing notice requirement and 30-day operative period. *See* Amendment No. 1, *supra* n.3.

[12] 15 U.S.C. 78s(b)(3)(A).

[13] 17 CFR 240.19–4(f)(6).

[14] For purposes only of accelerating the operative date of this proposal, the Commission has considered the proposed rule's impact on efficiency, competition, and capital formation. 15 U.S.C. 78c(f).

[15] 17 CFR 200.30–3(a)(12).

SECURITIES AND EXCHANGE COMMISSION

[Release No. 34–43263; File No. SR–NASD–00–53]

Self-Regulatory Organizations; Notice of Filing and Immediate Effectiveness of Proposed Rule Change by the National Association of Securities Dealers, Inc. Relating to the Extension of the Effective Date of Phase Three for Order Audit System Rules

September 8, 2000.

Pursuant to Section 19(b)(1) of the Securities Exchange Act of 1934 (''Act''),[1] and Rule 19b–4 thereunder,[2] notice is hereby given that on August 31, 2000, the National Association of Securities Dealers, Inc. (''NASD or ''Association''), through its wholly-owned subsidiary, NASD Regulation, Inc. (''NASD Regulation'') filed with the Securities and Exchange Commission (''SEC'' or ''Commission'') the proposed rule change as described in Items I, II, and III below, which Items have been prepared by NASD Regulation. The Commission in publishing this notice to solicit comments on the proposed rule change from interested persons.

I. Self-Regulatory Organization's Statement of the Terms of Substance of the Proposed Rule Change

NASD Regulation proposes to amend Rule 6957 to extend the effective date of the implementation of Phase Three of the Order Audit Trail System (''OATS'') Rules to December 15, 2000.

Below is the text of the proposed rule changes. Proposed new language is underlined; proposed deletions are in brackets.

NASD Systems and Programs

6950. Order Audit Trail System

* * * * *

6957. Effective Date

The requirements of the Order Audit Trail System shall be effective in accordance with the following schedule:

(a) and (b) No change.

(c) Manual Orders.

The requirements of the Order Audit Trail System shall be effective on *December 15, 2000* [October 31, 2000], for all manual orders, provided that firms shall be required to report information item (18) specified in Rule 6954(b) only to the extent such item is available to them and shall not be required to record and report information items (4) and (5) specified in Rule 6954(b) and information item (1) specified in Rule 6954(c).

(d) Rule 3110.

The requirements of Rule 3110(h)(1)(A) and Rule 3110(h)(1)(B) shall be effective on March 1, 1999, and the requirements of Rule 3110(h)(1)(C) shall be effective on *December 15, 2000* [October 31, 2000]. The requirements of Rule 3110(h)(2) and Rule 3110(h)(3) shall be effective on March 1, 1999.

II. Self-Regulatory Organization's Statement of the Purpose of, and Statutory Basis for, the Proposed Rule Change

In its filing with the Commission, NASD Regulation included statements concerning the purpose of and basis for the proposed rule change and discussed any comments it received on the proposed rule change. The text of these statements may be examined at the places specified in Item IV below. NASD Regulation has prepared summaries, set forth in sections A, B, and C below, of the most significant aspects of such statements.

A. Self-Regulatory Organization's Statement of the Purpose of, and Statutory Basis for, the Proposed Rule Change

1. Purpose

On March 6, 1998, the SEC approved NASD OATS Rules 6950 through 6957.[3] OATS provides a substantially enhanced body of information regarding orders and transactions that improves NASD Regulation's ability to conduct surveillance and investigations of member firms for violations of Association rules. In addition, OATS is intended to fulfill one of the undertakings contained in the order issued by the SEC relating to the settlement of an enforcement action against the NASD for failure to

[1] 15 U.S.C. 78s(b)(1).

[2] 17 CFR 240.19b–4.

[3] *See* Securities Exchange Act Release No. 39729, 63 FR 12559 (March 13, 1998) (order approving File No. SR–NASD–97–56).

[4] *See* In the Matter of National Association of Securities Dealers, Inc., Securities Exchange Act Release No. 37538 (August 8, 1996); Administrative Proceeding File No. 3–9056 (''SEC Order'').

[5] *Id.*

adequately enforce its rules.[4] Pursuant to the SEC Order, OATS is required, at a minimum, to (1) provide an accurate, time-sequenced record of orders and transactions, beginning with the receipt of an order at the first point of contact between the broker/dealer and the customer or counterparty and further documenting the life of the order through the process of execution, and (2) provide for market-wide synchronization of clocks used in connection with the audit trail.[5]

In general, OATS imposes obligations on member firms to record in electronic form and to report to NASD Regulation certain information with respect to orders originated, received, transmitted, modified, canceled, or executed (''reportable events'') by NASD members relating to a Nasdaq Stock Market, Inc. (''Nasdaq'') equity security. This information is integrated with quote information and transaction information reported to the Automated Confirmation Transaction Service (''ACT'')[6] to provide the Association with an accurate, time-sequenced record of orders and other transactions.

The effective dates for OATS requirements are set forth in NASD Rule 6957, which provides for different phases of implementation. All members were required to synchronize their computer system clocks and all mechanical clocks that record times for regulatory purposes by August 7, 1998, and July 1, 1999, respectively. In addition, the implementation schedule required that electronic orders received at the trading department of a member that is a market maker in the subject securities and those received by electronic communications networks (''ECNs'') be entered into OATS as of March 1, 1999 (''Phase One''). Not all information relating to electronic orders received by market makers was required to be reported to OATS during Phase One. Information items relating to all electronic orders, however, was required to be reported to OATS by August 1, 1999 (''Phase Two''). Under the current implementation schedule, the OATS rules will apply to all manual orders on October 31, 2000 (''Phase Three'').[7]

Since the implementation of OATS, NASD Regulation has been closely reviewing OATS activities with the goal of identifying ways in which to improve OATS and enhance the effectiveness of OATS as a regulatory tool. In this regard, NASD Regulation has proposed certain changes to OATS that it believes will enhance NASD Regulation's automated surveillance for compliance with trading and market making rules such as the NASD's Limit Order Protection Interpretation, the SEC's Order Handling Rules, and a member firm's best execution obligations.[8]

2. Statutory Basis

NASD Regulation believes that the proposed rule change is consistent with the provisions of Section 15A(b)(6) of the Act,[9] which requires, among other things, that the Association's rules be designed to prevent fraudulent and manipulative acts and practices, to promote just and equitable principles of trade, and, in general, to protect investors and the public interest. NASD Regulation believes that extending the effective date of Phase Three implementation of OATS will provide the additional time necessary to fully analyze and consider the proposed changes to OATS rules and determine whether the proposed rule changes are appropriate.

B. Self-Regulatory Organization's Statement on Burden on Competition

NASD Regulation does not believe that the proposed rule change will result in any burden on competition that is not necessary or appropriate in furtherance of the purposes of the Act.

C. Self-Regulatory Organization's Statement on Comments on the Proposed Rule Change Received From Members, Participants or Others

NASD Regulation has neither solicited nor received written comments on the proposed rule change.

III. Date of Effectiveness of the Proposed Rule Change and Timing for Commission Action

Pursuant to Section 19(b)(3)(A) of the Act[10] and Rule 19b–4(f)(6) thereunder,[11] the proposed rule change has become effective upon filing as it effects a change that: (1) Does not significantly affect the protection of investors or the public interest; (2) does not impose any significant burden on competition; and (3) by its terms, does not become operative for 30 days from the date of filing, and the Association provided the Commission with written notice of its intent to file the proposed rule change at least five business days prior to the filing date.

At any time within 60 days of the filing of the proposed rule change, the Commission may summarily abrogate such rule change if it appears to the Commission that such action is necessary or appropriate in the public interest, for the protection of investors, or otherwise in furtherance of the purposes of the Act.

IV. Solicitation of Comments

Interested persons are invited to submit written data, views and arguments concerning the foregoing, including whether the proposed rule change is consistent with the Act. Persons making written submissions should file six copies thereof with the Secretary, Securities and Exchange Commission, 450 Fifth Street, NW., Washington, DC 20549–0609. Copies of the submission, all subsequent amendments, all written statements with respect to the proposed rule change that are filed with the Commission, and all written communications relating to the proposed rule change between the Commission and any person, other than those that may be withheld from the public in accordance with the provisions of 5 U.S.C. 552, will be available for inspection and copying in the Commission's Public Reference Room. Copies of such filing will also be available for inspection and copying at the principal office of the NASD. All submissions should refer to File No. SR–NASD–00–53 and should be submitted by October 5, 2000.

For the Commission, by the Division of Market Regulation, pursuant to delegated authority.[12]

Margaret H. McFarland,

Deputy Secretary.

[FR Doc. 00–23563 Filed 9–13–00; 8:45 am]

BILLING CODE 8010–01–M

[6] ACT is an automated system owned and operated by Nasdaq that captures transaction information in real-time.

[7] On March 9, 2000, NASD Regulation filed a proposed amendment with the Commission for immediate effectiveness to extend the implementation date of Phase Three from July 31, 2000 to October 31, 2000. *See* Securities Exchange Act Release No. 42515 (March 10, 2000), 65 FR 14638 (March 17, 2000).

[8] *See* File No. SR–NASD–00–23 (currently pending before the Commission).

[9] 15 U.S.C. 78o–3(b)6).

[10] 15 U.S.C. 78s(b)(3)(A).

[11] 17 CFR 240.19b–4(f)(6).

[12] 17 CFR 200.30–3(a)(12).

SECURITIES AND EXCHANGE COMMISSION

[Release No. 34–43254; File No. SR–Phlx–00–62]

Self-Regulatory Organizations; Notice of Filing of Proposed Rule Change of the Philadelphia Stock Exchange; Inc. Relating to Mandatory Auto-Quote Settings To Update Quotations Based on a Certain Minimum Movement in the Underlying Security

September 6, 2000.

Pursuant to Section 19(b)(1) of the Securities Exchange Act of 1934 (''Act''),[1] and Rule 19b–4 thereunder,[2] notice is hereby given that on August 1, 2000, the Philadelphia Stock Exchange, Inc. (''Phlx'' or ''Exchange'') filed with the Securities and Exchange Commission (''Commission'') the proposed rule change as described in Items I, II, and III below, which Items have been prepared by the Phlx. The Commission is publishing this notice to solicit comments on the proposed rule change from interested persons.

I. Self-Regulatory Organization's Statement of the Terms of Substance of the Proposed Rule Change

The Phlx proposes to amend Commentary .01 to Exchange Rule 1080, ''Philadelphia Stock Exchange Automated Options Market (AUTOM) and Automatic Execution System (AUTO–X),'' to allow the Chairman of the Exchange's Board of Governors to mandate that, for quote capacity management purposes, the Exchange's Auto-Quote system (''Auto-quote'')[3] be set to update options quotations based on a certain minimum movement in the underlying security.

The proposed rule would state that if options trading systems throttle quotations for at least three minutes, the Chairman of the Exchange's Board of Governors or his designee may, for capacity management purposes, mandate that Auto-Quote be set to update quotations based on a certain minimum movement in the underlying security.[4] Such minimum setting may continue for a period of 15 minutes, and may be continued every 15 thereafter, provided that the Exchange's options trading systems are throttling quotations at the end of such 15-minute period.

The text of the proposed rule follows. Additions to the rule are in italics.

* * * * *

Rule 1080. Philadelphia Stock Exchange Automated Options Market (AUTOM) and Automatic Execution System (AUTO–X)

(a)–(h) No change.

Commentary:

.01 Automatic Quotation (Auto-Quote) is the Exchange's electronic options pricing system, which enables specialists to automatically monitor and instantly update quotations. *If options trading systems throttle quotations for at least three minutes, the Chairman of the Board of Governors or is designee may, for capacity management purposes, mandate that the Auto-Quote be set to update quotations based on a certain minimum movement in the underlying security for: (i) all options; (ii) index options only; or (c) certain specified options, taking into account certain factors that may include, but are not limited to, the price of the underlying security, volatility in the underlying security, or whether there has been any trading volume over the last two trading days. Such mandated minimum setting may continue for a period of 15 minutes, and may be continued every 15 minutes thereafter, provided that the Exchange's options trading systems are throttling quotations at the end of each such 15-minute period.*

.02–.03 No change.

* * * * *

II. Self-Regulatory Organization's Statement of the Purpose of, and Statutory Basis for, the Proposed Rule Change

In its filing with the Commission, the Phlx included statements concerning the purpose of and basis for the proposed rule change and discussed any comments it received on the proposed rule change. The text of these statements may be examined at the places specified in Item IV below. The self-regulatory organization has prepared summaries, set forth in sections A, B, and C below, of the most significant aspects of such statements.

A. Self-Regulatory Organization's Statement of the Purpose of, and Statutory Basis for, the Proposed Rule Change

1. Purpose

The purpose of the proposed rule change is to allow the Exchange's Chairman or his designee to take measures to reduce the volume of outbound options quotations during periods of peak Auto-Quote capacity usage on the Exchange's Options Floor. Currently, Auto-Quote includes three commonly used options pricing algorithms: the Black Scholes Option Pricing Model; the Cox, Ross and Rubenstein Binomial Option Pricing Model; and the Barone, Adesi and Whaley American Option Pricing Model. In addition, a specialist unit may separately employ other pricing models (called specialized quote feed). Each specialist decides which pricing model to use and may change the trading model during the trading day.

Outbound options quotations are forwarded electronically to the Options Price Reporting Authority (''OPRA''), which in turn disseminates them to various vendors of the information. Recently, due to increased overall options volume and significant increases in the number of quotations generated, OPRA has, at times, been unable to disseminate quotation traffic on a timely basis. In order to address the capacity constraints, each exchange has been assigned a specific allotment of bandwidth capacity for messages transmitted to, and received from OPRA. Each exchange must limit the volume of the quotation traffic it transmits to OPRA to its specific capacity allocation.[5]

In order to address its own capacity issues, OPRA has set a timetable for increasing its ability to process message traffic. OPRA has stated that, by September 30, 2000, it expects all options exchanges sending quotation information, as well as the vendors receiving this information from OPRA, to be ready to operate in an enhanced environment utilizing telecommunications lines with substantially greater message traffic capability (from 5,000 to 8,000 messages per second).

The proposed rule is intended to address the Exchange's ability to manage quote traffic while the various solutions to quote capacity issues are being implemented. Currently, one

[1] 15 U.S.C. 78s(b)(1).

[2] 17 CFR 240.19b–4.

[3] Auto-Quote is the Exchange's electronic options pricing system that enables specialists to automatically monitor and instantly update quotations, based on incremental changes in the price of the security underlying the option.

[4] For example, Auto-Quote may be set to update options quotations based on a price change of ⅛, meaning that each time the price of the underlying security increases or decreases by that amount, Auto-Quote would update the quotation on the overlying option on reflect such a change. The proposed rule would allow the Chairman or his designee to mandate that the Auto-Quote be set to update quotations in the options based on, for example, a price change of ¼ in the underlying security, meaning that Auto-Quote would not update quotations on the overlying option until the price of the underlying security increases or decreases by ¼. The increase in the incremental price change in the underlying security would result in fewer options quotations being disseminated.

[5] *See* Securities Exchange Act Release No. 42779 (May 12, 2000), 65 FR 36180 (May 19, 2000) (pertaining to OPRA temporary capacity allocation plan).

longstanding method the Exchange has used to manage quote traffic is ''throttling,'' or capping outbound quote traffic to OPRA. For many years, the Exchange has had in place, within its options trading systems, the ability to internally throttle total outbound message traffic to OPRA by limiting, to a level equal to the Exchange's capacity allocation, the amount of messages sent to OPRA in a given second. This is accomplished by withholding some Auto-Quote generated messages from dissemination each second until the next second. Throttling may result in some quotations being overridden by subsequent quotations. Throttling may, therefore, prevent older quotations-in-waiting from ever being disseminated.

The proposed rule addresses the Exchange's ability to manage the actual number of option quotations being generated by permitting the Chairman or his designee to direct that Auto-Quote be set to update quotations based on a certain minimum movement in the underlying security.

2. Statutory Basis

The Phlx believes that the proposed rule change is consistent with Section 6 of the Act [6] in general, and with Section 6(b)(5) of the Act [7] specifically, in that it is designed to perfect the mechanisms of a free and open market and the national market system, and to protect investors and the public interest.

B. Self-Regulatory Organization's Statement on Burden Competition

The Phlx does not believe that the proposed rule change will impose any inappropriate burden on competition.

C. Self-Regulatory Organization's Statement on Comments on the Proposed Rule Change Received From Members, Participants or Others

No written comments were either solicited or received.

III. Date of Effectiveness of the Proposed Rule Change and Timing for Commission Action

Within 35 days of the date of publication of this notice in the **Federal Register** or within such longer period (i) as the Commission may designate up to 90 days of such date if it finds such longer period to be appropriate and publishes its reasons for so finding or (ii) as to which the Phlx consents, the Commission will:

(A) By order approve such proposed rule change, or,

(B) Institute proceedings to determine whether the proposed rule change should be disapproved.

IV. Solicitation of Comments

Interested persons are invited to submit written data, views and arguments concerning the foregoing, including whether the proposed rule change is consistent with the Act. Persons making written submissions should file six copies thereof with the Secretary, Securities and Exchange Commission, 450 Fifth Street, NW, Washington, DC 20549–0609. Copies of the submission, all subsequent amendments, all written statements with respect to the proposed rule change that are filed with the Commission, and all written communications relating to the proposed rule change between the Commission and any person, other than those that may be withheld from the public in accordance with the provisions of 5 U.S.C. 552, will be available for inspection and copying in the Commission's Public Reference Room. Copies of such filing will also be available for inspection and copying at the principal office of the Phlx. All submissions should refer to File No. SR–Phlx–00–62 and should be submitted by October 5, 2000.

For the Commission by the Division of Market Regulation, pursuant to delegated authority.[8]

Margaret H. McFarland,

Deputy Secretary.

[FR Doc. 00–23564 Filed 9–13–00; 8:45 am]

BILLING CODE 8010–01–M

[6] 15 U.S.C. 78f.

[7] 15 U.S.C. 78f(b)(5).

[8] 17 CFR 200.30–3(a)(12)

SECURITIES AND EXCHANGE COMMISSION

[Release No. 34–43260; File No. SR–Phlx–00–51]

Self-Regulatory Organizations; Notice of Filing and Immediate Effectiveness of Proposed Rule Change by the Philadelphia Stock Exchange, Inc. Relating to the Reporting Structure of the Internal Audit Department

September 7, 2000.

Pursuant to Section 19(b)(1) of the Securities Exchange Act of 1934 (''Act''),[1] and Rule 19b–4 thereunder,[2] notice is hereby given that on August 24, 2000, the Philadelphia Stock Exchange, Inc. (''Phlx'' or ''Exchange'') filed with the Securities and Exchange Commission (''Commission'') the proposed rule change as described in Items I, II, and III below, which Items have been prepared by the Exchange. The Commission is publishing this notice to solicit comments on the proposed rule change from interested persons.

I. Self-Regulatory Organization's Statement of the Terms of Substance of the Proposed Rule Change

The Exchange proposes to amend its By-Law Article X, Section 10–9, to state that the Exchange's Internal Audit Department will report to the Audit Committee of the Exchange. The text of the proposed rule change is available at the Office of the Secretary, the Exchange, and at the Commission.

II. Self-Regulatory Organization's Statement of the Purpose of, and Statutory Basis for, the Proposed Rule Change

In its filing with the Commission, the Exchange included statements concerning the purpose of and basis for the proposed rule change and discussed any comments it received on the proposed rule change. The text of these statements may be examined at the places specified in Item IV below. The Exchange has prepared summaries, set forth in Sections A, B, and C below, of the most significant aspects of such statements.

A. Self-Regulatory Organization's Statement of the Purpose of, and Statutory Basis for, the Proposed Rule Change

1. Purpose

Currently, pursuant to Phlx By-law Article X, Section 10–9(b), the Internal Audit Department reports to both the Audit Committee and the General Counsel of the Exchange. The purpose of the proposed By-Law amendment is to change the reporting structure of the Internal Audit Department so that it reports only to the Audit Committee, a body composed in such a way that facilitates the exerecise of independent judgment in oversight matters relating to the Exchange.[3] The proposed rule change should enhance the independence of the Internal Audit Department [4] and is consistent with the

[1] 15 U.S.C. 78s(b)(1).

[2] 17 CFR 240.10b–4.

[3] The Audit Committee consists of three members who are public members of the Exchange's Board. Audit Committee members cannot serve in a management capacity with the Exchange or any affiliate, and must be free of any other relationships that would interfere with the exercise of independent judgment. Phlx By-Law Article X, Section 10–9(a).

[4] *See*, Standard 100 of *Standards for the Professional Practice of Internal Auditing* (The Institute of Internal Auditors, 1998): ''Internal auditors should be independent of the activities they audit.''

responsibility of the Audit Committee to review the actions of the Internal Audit Department. The proposed amendment should also conform the reporting structure of the Internal Audit Department to industry practice.

2. Statutory Basis

The Exchange believes that the proposed rule change is consistent with Section 6 of the Act in general,[5] and with Section 6(b)(5) in particular,[6] in that it is designed to promote just and equitable principles of trade and to protect investors and the public interest by clarifying the reporting structure of the Internal Audit Department.

B. Self-Regulatory Organization's Statement on Burden on Competition

The Exchange does not believe that the proposed rule change will impose any inappropriate burden on competition.

C. Self-Regulatory Organization's Statement on Comments on the Proposed Rule Change Received from Members, Participations or Others

The Exchange has neither solicited nor received written comments on the proposed rule change.

III. Date of Effectiveness of the Proposed Rule Change and Timing for Commission Action

The foregoing proposed rule change is concerned solely with the administration of the Exchange. Therefore, the proposed rule change has become immediately effective pursuant to Section 19(b)(3)(A)(iii) of the Act[7] and Rule 19b–4(f)(3) thereunder.[8] At any time within 60 days of the filing of such proposed rule change, the Commission may summarily abrogate such rule change if it appears to the Commission that such action is necessary or appropriate in the public interest, for the protection of investors, or otherwise in furtherance of the purposes of the Act.

IV. Solicitation of Comments

Interested persons are invited to submit written data, views and arguments concerning the foregoing including whether the proposed rule change is consistent with the Act. Persons making written submissions should file six copies thereof with the Secretary, Securities and Exchange Commission, 450 Fifth Street, NW, Washington, DC 20549–0609. Copies of the submission, all subsequent amendments, all written statements with respect to the proposed rule change that are filed with the Commission, and all written communications relating to the proposed rule change between the Commission and any person, other than those that may be withheld from the public in accordance with the provisions of 5 U.S.C. 552, will be available for inspection and copying in the Commission's Public Reference Room. Copies of such filing will also be available for inspection and copying at the principal office at the Phlx. All submissions should refer to File No. SR–Phlx–00–51 and should be submitted by October 5, 2000.

For the Commission, by the Division of Market Regulation, pursuant to delegated authority.[9]

Margaret H. McFarland,

Deputy Secretary.

[FR Doc. 00–23613 Filed 9–13–00; 8:45 am]

BILLING CODE 8010–01–M

[5] 15 U.S.C. 78f.

[6] 15 U.S.C. 78f(b)(5).

[7] 15 U.S.C. 78s(b)(3)(A)(iii).

[8] 17 CFR 240,19b–4(f)(3).

[9] 17 CFR 200.30–3(a)(12).

SECURITIES AND EXCHANGE COMMISSION

[Release No. 34–43257; File No. SR–PHLX–00–73]

Self-Regulatory Organizations; Notice of Filing and Immediate Effectiveness of Proposed Rule Change by the Philadelphia Stock Exchange, Inc. Relating to a Reduction in Fees for Off-Floor Traders

September 6, 2000.

Pursuant to Section 19(b)(1) of the Securities Exchange Act of 1934 (''Act'')[1] and Rule 19b–4 thereunder,[2] notice is hereby given that on August 25, 2000, the Philadelphia Stock Exchange, Inc. (''Phlx'' or ''Exchange'') filed with the Securities and Exchange Commission (''Commission'') the proposed rule change as described in Items I, II, and III below, which Items have been prepared by the Exchange. The Commission is publishing this notice to solicit comments on the proposed rule change from interested persons.

I. Self-Regulatory Organization's Statement of the Terms of Substance of the Proposed Rule Change

The Exchange proposes to amend its schedule of dues, fees and charges to require all current and future off-floor traders to pay an initial registration fee of $50 and an annual fee thereafter of $250 for all off-floor traders registered as of April 1st of each year. These amounts reflect a reduction from $1,000 for each fee that had previously been approved.

Specifically, the Exchange seeks to require associated persons of member organizations for which the Exchange is Designated Examining Authority (''DEA''), but who are not themselves Exchange members, who engage in proprietary trading of equities and options, including, but not limited to, persons who execute such trades or make trading decisions, to pay a reduced registration fee of $50 and thereafter a reduced annual fee of $250. The proposed decreases would apply to those persons who are not Exchange members registered in a trading capacity on the floor of the Exchange. The proposed decreases are to be effective September 1, 2000, with implementation of the annual fee to be April 1, 2001.

II. Self-Regulatory Organization's Statement of the Purpose of, and Statutory Basis for, the Proposed Rule Change

In its filing with the Commission, the Exchange included statements concerning the purpose of and basis for the proposed rule change and discussed any comments it received on the proposed rule change. The text of these statements may be examined at the places specified in Item IV below. The Exchange has prepared summaries, set forth in sections (A), (B), and (C) below, of the most significant aspects of such statements.

A. Self-Regulatory Organization's Statement of the Purpose of, and Statutory Basis for, the Proposed Rule Change

(1) Purpose

The purpose of this proposed rule change is to amend the Exchange's fee schedule to decrease off-floor trader fees to $250, following a review of the original purpose of such fees as well as their current costs. Off-floor traders are, pursuant to Phlx Rule 604, persons who are currently associated with member organizations for which the Exchange is the DEA, but who are not themselves Exchange members, who engage in proprietary trading of equities or options from off the floor of the Exchange, and who must file a Form U–4 and a fingerprint card as well as provide proof of successful completion of the Uniform Registered Representative Examination, Series 7. At this time, the Exchange charges such traders an initial registration fee of $1,000 and an annual fee of $1,000. The payment of the decreased initial

[1] 15 U.S.C. 78s(b)(1).

[2] 17 CFR 240.19b–4.

registration fee of $50 will be a prerequisite to engaging in trading from off the floor of the Exchange.

All such persons who are registered with the Exchange as of April 1 of each year, beginning April 1, 2001, will be assessed an annual fee of $250. As stated above, the fees are proposed to be decreased from $1,000 in recognition of decreased costs of administration that the Exchange has been and will be incurring respecting off-floor trader examinations. The Exchange had previously experienced increased administration costs incurred in conducting background checks on the individuals to whom the fees apply, processing of forms, fingerprint charges, requests for disciplinary history to the Central Registration Depository, as well as in conducting on-site examinations of the home and branch offices of the various member firms with which off-floor traders associate. During the course of 1999, the Exchange experienced an increase in the number of member organizations with off-floor traders who were subject to the previous $1,000 registration fee, as well as the annual fee. Accordingly, the Exchange undertook increased administrative and regulatory responsibilities associated with such member organizations and their off-floor traders, including scheduling more frequent compliance inspections. Since the previous increase in these fees effective March 1, 2000,[3] the Exchange has conducted an evaluation of direct costs associated with the registration of off-floor traders and maintenance of their respective compliance information within the Exchange's Examination and Membership Services Departments. The evaluation disclosed that a reduction in the initial registration and annual fee for off-floor traders was appropriate.

(2) Statutory Basis

The proposed rule change is consistent with Section 6(b)[4] of the Act in general and furthers the objectives of Section 6(b)(4)[5] in particular, in that it is designed to provide for the equitable allocation of reasonable dues, fees, and other charges among its members and issuers and other persons using its facilities.

B. Self-Regulatory Organization's Statement on Burden on Competition

The Exchange does not believe that the proposed rule change will impose any inappropriate burden on competition.

C. Self-Regulatory Organization's Statement on Comments on the Proposed Rule Change Received from Members, Participations or Others

No written comments were solicited or received with respect to the proposed rule change.

III. Date of Effectiveness of the Proposed Rule Change and Timing for Commission Action

The foregoing rule change, which establishes or changes a due, fee or other charge imposed by the Exchange, has become effective pursuant to Section 19(b)(3)(A) of the Act[6] and subparagraph (f)(2) of Rule 19b–4 thereunder.[7] At any time within 60 days of the filing of such proposed rule change, the Commission may summarily abrogate such rule change if it appears to the Commission that such action is necessary or appropriate in the public interest, for the protection of investors, or otherwise in the furtherance of the purposes of the Act.

IV. Solicitation of Comments

Interested persons are invited to submit written data, views and arguments concerning the foregoing, including whether the proposed rule change is consistent with the Act. Persons making written submissions should file six copies thereof with the Secretary, Securities and Exchange Commission, 450 Fifth Street, NW., Washington, DC 20549–0609. Copies of the submission, all subsequent amendments, all written statements with respect to the proposed rule change that are filed with the Commission, and all written communications relating to the proposed rule change between the Commission and any person, other than those that may be withheld from the public in accordance with the provisions of 5 U.S.C. 552, will be available for inspection and copying in the Commission's Public Reference Room in Washington, DC.

Copies of such filing will also be available for inspection and copying at the principal office of the Exchange. All submissions should refer to File No. SR–PHLX–00–73 and should be submitted by October 5, 2000.

For the Commission, by the Division of Market Regulation, pursuant to delegated authority.[8]

Margaret H. McFarland,

Deputy Secretary.

[FR Doc. 00–23615 Filed 9–13–00; 8:45 am]

BILLING CODE 8010–01–M

[3] *See* Securities Exchange Act Release No. 42497 (May 6, 2000), 65 FR 14005 (March 15, 2000); Securities Exchange Act Release No. 41361 (March 3, 1999), 64 FR 25388 (May 11, 1999).

[4] 15 U.S.C. 78f(b).

[5] 15 U.S.C. 78f(b)(4).

[6] 15 U.S.C. 78s(b)(3)(A).

[7] 17 CFR 240.19b–4(f)(2).

[8] 17 CFR 200.30–3(a)(12).

DEPARTMENT OF STATE

Office of Visa Services

[Public Notice 3415]

Proposed Information Collection for U.S. Department of State Immigrant Visa Applicants

AGENCY: Office of Visa Services, Department of State.

ACTION: 30-day notice of proposed information collection; Choice of address and agent for U.S. Department of State Immigrant Visa Applicants.

SUMMARY: The Department of State has submitted the following information collection request to the Office of Management and Budget (OMB) for approval in accordance with the Paperwork Reduction Act of 1995. Comments should be submitted to OMB within 30 days of the publication of this notice.

The following summarizes the information collection proposal submitted to OMB:

Type of Request: New Information Collection.

Originating Office: Bureau of Consular Affairs, Department of State.

Title of Information Collection: Choice of Address and Agent for U.S. Department of State Immigrant Visa Applicants.

Frequency: Once.

Respondents: All immigrant visa principal applicants.

Estimated Number of Respondents: 350,000.

Average Hours Per Response: 0.5 hours.

Total Estimated Burden: 175,000.

Public comments are being solicited to permit the agency to:

- Evaluate whether the proposed information collection is necessary for the proper performance of the functions of the agency, including whether the information will have practical utility.
- Evaluate the accuracy of the agency's estimate of the burden of the proposed collection, including the validity of the methodology and assumptions used.
- Enhance the quality, utility, and clarity of the information to be collected.
- Minimize the reporting burden on those who are to respond, including

through the use of automated collection techniques or other forms of technology.

FOR FURTHER INFORMATION CONTACT: Copies of the proposed information collection and supporting documents may be obtained from Daria Darnell, 2401 E Street NW, Rm L–703, Tel: 202–663–1253, U.S. Department of State, Washington, DC 20520. Public comments and questions should be directed to the State Department Desk Officer, Office of Information and Regulatory Affairs, Office of Management and Budget (OMB), Washington, DC 20530, (202) 395–5871.

Dated: August 11, 2000.

Nancy Sambaiew,

Deputy Assistant Secretary of State for Visa Services, Bureau of Consular Affairs.

[FR Doc. 00–23637 Filed 9–13–00; 8:45 am]

BILLING CODE 4710–06–P

DEPARTMENT OF STATE

[Public Notice #3409]

U.S. Advisory Panel to the U.S. Section of the North Pacific Anadromous Fish Commission (Notice of Renewal)

The Department of State has renewed the Charter of the U.S. Advisory Panel to the U.S. Section of the North Pacific Anadromous Fish Commission (NPAFC) for another two years, effective September 1, 2000.

The NPAFC is a venue for consultation and coordination of cooperative high seas fishery enforcement among Convention parties.

The NPAFC was established by the Convention for the Conservation of Anadromous Stocks in the North Pacific Ocean, signed on February 12, 1992, by Canada, Japan, the Russian Federation, and the United States, and entered into force on February 16, 1993. The U.S. Advisory Panel will continue to work with the U.S. Section to promote the conservation of anadromous fish stocks, particularly salmon, throughout their migratory range in the North Pacific Ocean, as well as ecologically related species.

The U.S. Section of the Commission is composed of three Commissioners who are appointed by the President. Each Commissioner is appointed for a term not to exceed four years, but is eligible for reappointment. The Secretary of State, in consultation with the Secretary of Commerce, may designate alternate commissioners. The Advisory Panel to the U.S. Section is composed of 14 members appointed by the Secretary, in consultation with the Secretary of Commerce, who serve for a term not to exceed four years, and may not serve more than two consecutive terms.

The Advisory Panel will continue to follow the procedures prescribed by the Federal Advisory Committee Act (FACA). Meetings will continue to be open to the public unless a determination is made in accordance with Section 10 of the FACA, 5 U.S.C. Secs. 552b(c)(1) and (4), that a meeting or a portion of the meeting should be closed to the public. Notice of each meeting will continue to be provided for publication in the **Federal Register** as far in advance as possible prior to the meeting.

For further information on the renewal of the Advisory Panel, please contact Sally Cochran, International Relations Office, Office of Marine Conservation in the Department of State, (202) 647–2335.

Dated: September 11, 2000.

Sally A. Cochran,

International Relations Officer, Department of State.

[FR Doc. 00–23636 Filed 9–13–00; 8:45 am]

BILLING CODE 4710–09–M

DEPARTMENT OF STATE

[Public Notice 3408]

Bureau of Educational and Cultural Affairs Request for Proposals: Georgian School of Journalism Project

NOTICE: Request for proposals.

SUMMARY: The Office of Global Educational Programs of the United States Department of State's Bureau of Educational and Cultural Affairs announces an open competition for an assistance award program. Public and private non-profit organizations meeting the provisions described in IRS regulation 26 CFR 1.501(c) may submit proposals to assist in establishing and developing a school of Journalism in the Republic of Georgia with the goal of training 25 journalists each year during the grant period. Bureau policy stipulates that awards to organizations with less than four years experience in conducting international exchanges are limited to $60,000. The Bureau anticipates awarding one grant in the amount of $540,000 to conduct activities outlined in this Request for Proposals. Therefore, only organizations with four or more years experience in coordinating international exchange programs are eligible to apply for this competition.

PROGRAM INFORMATION:

Overview

This project is designed to provide training to journalists in Georgia in ways that reflects the practice of American journalism with special emphasis on training in fact-based, fair and balanced reporting. In partnership with the Media Development Center, a Georgian NGO, a one-year English language Master's certificate program in journalism will be established, using American practitioners to train the next generation of Georgian journalists. The curriculum for the program should begin with three months of intensive training in economics, followed by nine months of training in journalism. Twenty-five students will be trained each year in the Master's program during the period of this grant. Applicants should propose a plan to provide instruction for up to three years. The applicant should also propose plans to establish a professional student newspaper as a practical training-based component of the overall program.

Background

The Republic of Georgia is undertaking efforts to implement democratic reforms, including steps to establish a free press in Georgia. However, Georgian journalists currently lack the skills to explain the forces of change. Journalists also do not always perceive their obligation to act as credible watchdogs; nor do they see the need to form associations to protect practitioners. The lack of professionalism creates severe impediments to the development of democracy, depriving citizens of reliable information about what is happening in their societies.

Program

This program is designed to provide journalism training in Georgia that reflects the practice of American journalism with special emphasis on training in fact-based, fair and balanced reporting. A one-year English language Master's certificate program in journalism will be established. Training should emphasize the fundamentals of reporting, writing, researching and editing. Courses in visual journalism and broadcast techniques should be provided, as well as theory courses that focus on ethics, the influence of media on society, and the role of a journalist in a democratic society. Since it is important that all of the students have a basic understanding of economics, it is recommend that the school year start with an intensive three-month session on micro and macro-economics. Economics in Georgia as in other

transitional economics in the NIS plays a pivotal role in all aspects of Georgian life. An academic background in economics will aid in the graduates' ability on report on and interpret current events in Georgia for their audience.

For the remaining nine months, students will choose either a print or broadcast component in the journalism program, though the grantee organization will be free to consider whether students may train in both areas, to give them greater professional flexibility. The focus should be on developing basic reporting and research skills for print and broadcast; computer-assisted research and reporting should also be included in the curriculum. By the end of the academic year students should be doing advanced reporting, and completing a final project. The journalism school should also function as a resource for graduates of the program in their work as practicing journalists. Courses will be taught in English, so language testing will be required as part of the application process.

Applicants should propose a plan to provide instruction for up to three years. Applicants are encouraged to look for outside sources of funding for certain components, such as the student newspaper or purchase of broadcast equipment. Additional USG funding may be available to expand the program to include students from other countries in the NIS region or to continue the program after the initial funding period.

Staffing

A minimum of two full-time American faculty, or the equivalent, will teach 25 students each year in the print and broadcast components of the Master's program. A third American instructor will consult on the creation of a student newspaper and serve as faculty mentor for the newspaper. The paper should be fun as independently as possible and be able within a year to select student reporters on its own from the Master's program and from other Georgian university faculties and departments. Applicants should suggest ways to sustain the newspaper at the end of the training program. Students enrolled in the journalism program will likely hold undergraduate degrees in a variety of disciplines. Faculty should be available to spend extensive time one-on-one with students, for editorial conferences and individual critiques. The locally hired Georgian journalism program director and founder of the Media Development Center will help with recruitment of students, assist students in obtaining access to press conferences and policy makers, and locate media outlets that will accept student-produced news stories. The grant will cover the costs for local staff positions including but not limited to: administrative support staff, security personnel, computer technical support, and library staff. The grantee will be responsible for final decisions regarding the hiring of local staff but will consult with the local Georgian journalism program director. The grantee will not be responsible for covering the salary costs of the local Georgian journalism program director.

Logistics

The grantee organization in coordination with the local partner will be responsible for most arrangements associated with this program. The local partner will assist in recruiting students and arranging for language testing of applicants. Final selection of students must be approved by the grantee. The grantee will also be responsible for developing a curriculum based on practical training, locating American journalism teachers (preferably current practitioners of journalism) and economics professors, and coordinating with the local partner to provide international and domestic travel arrangements for U.S. trainers, make lodging and local transportation arrangements for the trainers, and manage the facility where the school will be housed. A site has been located to house the program and rent costs will be covered through a separate budget. Internet access will be available at the site but fees for the service should be incorporated into the grant budget.

Budget Guidelines

The award for this program may not exceed $540,000 for a period of up to three years. The U.S. grantee organization and the Georgian journalism program director will be expected to work together to locate other donor support. Other donors in Georgia have indicated an interest in this project. Applicants must submit a comprehensive budget for the entire program. Applicants may provide separate sub-budgets for each program component including equipment, phase, location, or activity to provide clarification. Local budget items must reflect operating costs in Georgia accurately; the Georgian program director will assist the applicant organizations in estimating operating costs. A nominal tuition fee, to be worked out with the advice of the program director, may be charged to students. Please refer to the Solicitation Package for complete budget guidelines and formatting instructions.

Announcement Title and Number: All correspondence with the Bureau concerning this RFP should reference the above title and number ECA/A/S/U–01–05.

FOR FURTHER INFORMATION, CONTACT: The Office of Global Educational Programs, Bureau of Educational and Cultural Affairs, ECA/A/S/U, Room 349, U.S. Department of State S.A. 44, 301 4th Street, SW., Washington, DC 20547, telephone 202–619–6492, fax 202–410–1433, Internet abailey@pd.state.gov to request a Solicitation Package. The Solicitation Package contains detailed award criteria, required application forms, specific budget instructions, and standard guidelines for proposal preparation. Please specify Bureau Program Officer Alanna Bailey on all inquiries and correspondence. Questions regarding budget estimates for local costs in Georgia should be directed to the founder of the Media Development Center and local Georgian journalism program director, Maia Mikazhavidze. She can be reached at +995–99–58–97–04.

Please read the complete **Federal Register** announcement before sending inquiries or submitting proposals. Once the RFP deadline has passed, Bureau staff may not discuss this competition with applicants until the proposal review process has been completed.

TO DOWNLOAD A SOLICITATION PACKAGE VIA INTERNET: The entire Solicitation Package may be downloaded from the Bureau's website at http://exchanges.state.gov/education/rfps. Please read all information before downloading.

DEADLINE FOR PROPOSALS: All proposal copies must be received at the Bureau of Educational and Cultural Affairs by 5 p.m. Washington, DC time on Friday, November 3, 2000. Faxed documents will not be accepted at any time. Documents postmarked the due date but received on a later date will not be accepted. Each applicant must ensure that the proposals are received by the above deadline.

APPROXIMATE PROGRAM DATES: Grants should begin on or about December 15, 2000.

Applicants must follow all instructions in the Solicitation Package. The original and 10 copies of the Application should be sent to: U.S. Department of State, SA–44, Bureau of Educational and Cultural Affairs, Ref.: ECA/A/S/U–01–05, Program Management, ECA/EX/PM, Room 336, 301 4th Street, SW., Washington, DC 20547.

Applicants must also submit the ''Executive Summary'' and ''Proposal Narrative'' sections of the proposal on a 3.5″ diskette, formatted for DOS. These documents must be provided in ASCII text (DOS) format with a maximum line length of 65 characters. The Bureau will transmit these files electronically to the Public Affairs section at the US Embassy for its review, with the goal of reducing the time it takes to get embassy comments for the Bureau's grants review process.

Diversity, Freedom and Democracy Guidelines

Pursuant to the Bureau's authorizing legislation, programs must maintain a non-political character and should be balanced and representative of the diversity of American political, social, and cultural life. ''Diversity'' should be interpreted in the broadest sense and encompass differences including, but not limited to ethnicity, race, gender, religion, geographic location, socio-economic status, and physical challenges. Applicants are strongly encouraged to adhere to the advancement of this principle both in program administration and in program content. Please refer to the review criteria under the ''Support for Diversity'' section for specific suggestions on incorporating diversity into the total proposal. Public Law 104–319 provides that ''in carrying out programs of educational and cultural exchange in countries whose people do not fully enjoy freedom and democracy,'' the Bureau ''shall take appropriate steps to provide opportunities for participation in such programs to human rights and democracy leaders of such countries.'' Proposals should reflect advancement of this goal in their program contents, to the full extent deemed feasible.

Year 2000 Compliance Requirement (Y2K Requirement)

The Year 2000 (Y2K) issue is a broad operational and accounting problem that could potentially prohibit organizations from processing information in accordance with Federal management and program specific requirements including data exchange with the Bureau. The inability to process information in accordance with Federal requirements could result in grantees' being required to return funds that have not been accounted for properly.

The Bureau therefore requires all organizations use Y2K compliant systems including hardware, software, and firmware. Systems must accurately process data and dates (calculating, comparing and sequencing) both before and after the beginning of the year 2000 and correctly adjust for leap years.

Additional information addressing the Y2K issue may be found at the General Services Administration's Office of Information Technology website at http://www.itpolicy.gsa.gov.

Review Process

Proposals are reviewed for adherence to legal and budgetary requirements by Bureau offices responsible for these functions. For program content, cost-effectiveness, and other criteria spelled out in the RFP, the review is conducted by an advisory, assistance award-review panel composed of Bureau and Department officers. Additional officers, including geographic area personnel, also review proposals for feasibility as well as potential for short- and long-term impact. Final funding decisions are at the discretion of the Department of State's Assistant Secretary for Educational and Cultural Affairs. Final technical authority for assistance awards resides with a Bureau Grants Officer.

The submission will be reviewed with the following review criteria in mind:

1. Quality of the program idea: Proposals should exhibit originality, substance, precision, and relevance to the creation of a sound journalism program. Proposals must demonstrate an in-depth understanding of the current situation in Georgia, and describe how the Master's certificate program and student newspaper will help to create a more open and free press in Georgia. Proposals should emphasize the practical nature of the curriculum.

2. Program planning: Proposals should detail curriculum for courses on reporting, writing and editing of print and broadcast journalism, with an emphasis on fact-based and investigative reporting. A plan for personal interaction between the students and faculty, including one-on-one critiques of student work, and a mechanism for continuing support for alumni after they have graduated from the program must be included. Agenda and relevant work plan should adhere to the program overview and guidelines described above. Student recruitment, English testing and selection must be detailed; proposals should include a sample application form with questions that will evaluate applicants' potential as well as abilities.

3. Ability to achieve program objectives: Objectives should be reasonable, feasible, and flexible. Proposals should clearly demonstrate how the institution will meet the program's objectives and plan.

4. Multiplier effect/impact: Proposed programs should demonstrate how they would link with and strengthen existing media outlets in Georgia, including establishment of long-term institutional and individual linkages.

5. Support of Diversity: Proposals should demonstrate substantive support of the Bureau's policy on diversity. Achievable and relevant features should be cited in both program administration (selection of participants, program venue and program evaluation) and program content (orientation and wrap-up sessions, program meetings, resource materials and follow-up activities).

6. Institutional Capacity/Area Expertise: Proposed personnel and institutional resources should be adequate and appropriate to achieve the program or project's goals. American faculty and local administrative staff must demonstrate the qualifications needed to recruit, select, teach and support students in this program.

7. Institution's Record/Ability: Proposals should demonstrate an institutional record of successful exchange programs, including responsible fiscal management and full compliance with all reporting requirements for past Bureau grants as determined by Bureau Grant Staff. The Bureau will consider the past performance of prior recipients and the demonstrated potential of new applicants.

8. Follow-on Activities: Proposals should provide a plan for continued follow-on activity (without Bureau support) ensuring that Bureau supported programs are not isolated events.

9. Project Evaluation: Proposals should include a plan to evaluate the activity's success, both as the activities unfold and at the end of the program. Draft student course evaluations, faculty questionnaires or other techniques plus description of a methodology to use to link outcomes to original project objectives are recommended.

10. Cost-effectiveness: The overhead and administrative components of the proposal, including salaries and honoraria, should be kept as low as possible. All other items should be necessary and appropriate.

11. Cost-sharing: Proposals should maximize cost-sharing through other private sector support as well as institutional direct funding contributions.

Authority

Overall grant making authority for this program is contained in the Mutual

Educational and Cultural Exchange Act of 1961, Public Law 87–256, as amended, also known as the Fulbright-Hays Act. The purpose of the Act is ''to enable the Government of the United States to increase mutual understanding between the people of the United States and the people of other countries * * * to strengthen the ties which unite us with other nations by demonstrating the educational and cultural interests, developments, and achievements of the people of the United States and other nations * * * and thus to assist in the development of friendly, sympathetic and peaceful relations between the United States and the other countries of the world.'' The funding authority for the program cited above is provided through the Freedom for Russia and Emerging Eurasian Democracies and Open Markets Support Act of 1992 (Freedom Support Act).

Notice

The terms and conditions published in this RFP are binding and may not be modified by any Bureau representative. Explanatory information provided by the Bureau that contradicts published language will not be binding. Issuance of the RFP does not constitute an award commitment on the part of the Government. The Bureau reserves the right to reduce, revise, or increase proposal budgets in accordance with the needs of the program and the availability of funds. Awards made will be subject to periodic reporting and evaluation requirements.

Notification

Final awards cannot be made until funds have been appropriated by Congress, allocated and committed through internal Bureau procedures.

Dated: September 4, 2000.

William B. Bader,

Assistant Secretary for Educational and Cultural Affairs, Department of State.

[FR Doc. 00–23386 Filed 9–13–00; 8:45 am]

BILLING CODE 4710–11–P

DEPARTMENT OF STATE

[Public Notice #3388]

Fine Arts Committee; Notice of Meeting

The Fine Arts Committee of the Department of State will meet on Friday, October 20, 2000 at 10:30 a.m. in the John Quincy Adams State Drawing Room. The meeting will last until approximately 12 p.m. and is open to the public.

The agenda for the committee meeting will include a summary of the work of the Fine Arts Office since its last meeting in April 2000 and the announcement of gifts of furnishings as well as financial contributions from January 1 through September 30, 2000. Public access to the Department of State is strictly controlled. Members of the public wishing to take part in the meeting should telephone the Fine Arts Office by October 13, 2000, telephone (202) 647–1990 to make arrangements to enter the building. The public may take part in the discussion as long as time permits and at the discretion of the chairman.

Dated: September 7, 2000.

Gail F. Serfaty,

Vice Chairman, Fine Arts Committee.

[FR Doc. 00–23635 Filed 9–13–00; 8:45 am]

BILLING CODE 4710–38–M

DEPARTMENT OF STATE

[Public Notice 3417]

Privacy Act of 1974; Integration of the Arms Control and Disarmament Agency and the United States Information Agency Systems of Records

SUMMARY: In accordance with the Privacy Act (5 U.S.C. 552a(e)(4) this notice describes alterations to the systems of records of the former Arms Control and Disarmament Agency, the former United States Information Agency and the Department of State. Revision to this systems of records is required as a result of the consolidation of the agencies as mandated by the Foreign Affairs Agencies Consolidation Act of 1998 (Pub. L. 105–277). It should also be noted that three systems of records specific to the International Bureau of Broadcasting of the former USIA were transferred to the Broadcasting Board of Governors. All operative systems of records affected by the Consolidation Act are being revised to reflect any changes. The revised system descriptions will be submitted separately. Inactive records from these ACDA and USIA systems of records were either retired or destroyed in accordance with their approved Records Disposition Schedules unless otherwise noted.

Notice is hereby given that the Department of State proposes to delete systems of records or create new Department of State systems of records from systems that were maintained by the former Arms Control and Disarmament Agency (ACDA) and former United States Information Agency (USIA). These actions are taken pursuant to the provisions of the Privacy Act of 1974, as amended [5 U.S.C. 522a (r)], and the Office of Management and Budget Circular No. A–130, Appendix I.

Pursuant to the Foreign Affairs Agencies Consolidation Act of 1998 (Pub. L. 105–277) the former ACDA and former USIA were integrated into the Department of State effective April 1, 1999 and October 1, 1999 respectively. As part of the consolidation, the Department assumed custody and control of systems of records maintained by ACDA and USIA. To eliminate duplication and to reflect current organizational and operational conditions, the Department has conducted a comprehensive review of the Privacy Act Systems of Records of both agencies and determined which of the systems of the former ACDA and former USIA will be deleted. Where appropriate, records of the deleted systems will be absorbed by Department of State Privacy Act systems of records which are performing like functions. Unique ACDA or USIA systems that continue to operate will be treated as new systems of records and will be assigned a Department of State system number.

The Department Intends To Take the Following Actions Related to the Privacy Act Systems of Records of the Former ACDA

ACDA–1 Official Personnel Records—This system will be deleted. Each individual's personnel records, including tax records associated with the employee's compensation, were merged into two of the Department's personnel records systems (STATE–31) Personnel Records and STATE–30 Personnel Payroll Records).

ACDA–2 Pending Personnel Records—This system will be deleted. The records of individuals who were under consideration for employment were merged into STATE–31 Personnel Records.

ACDA–3 Security Records—This system will be deleted. All ACDA security files were merged into STATE–36 Security Records.

ACDA–4 Statements by Principals During the Strategic Arms Limitation Talks, Mutual Balanced Force Reduction Negotiations, and the Standing Consultative Committee—This system will be deleted. Prior to its planned implementation in the mid-1980's it was learned that the records to be maintained in this system could be obtained from an existing record system. To avoid the creation of duplicate records, the ACDA–4 system of records was never implemented and no records were accumulated.

ACDA–5 Top Secret Document Control File Records—This system will be deleted. All Top Secret documents in ACDA's possession at the time of the consolidation were either archived, destroyed in accordance with existing regulations, or merged into the record systems of the gaining bureau(s). The Department of State has no Privacy Act system comparable to ACDA–5.Top Secret (TS) documents in the Department are filed, controlled and retrieved by TS control numbers and not by the name of the individual recipient.

ACDA–6 Document Classifier Data Index—This system will be deleted. ACDA–6 contained a list of ACDA personnel with authority under Executive Order 11652 to originally classify national security documents. The names of employees with authority to classify originally were maintained on data index cards and were retrieved by card sorting on the individual's name. ACDA–6 was discontinued with the issuance of Executive Order 12958 in 1995. The index card records were disposed of two years later in accordance with General Records Schedule 18, Item 1. The Department of State has no comparable Privacy Act System. The Department maintains a register of positions authorized to originally classify documents, but the information is accessible by position number and title and not by personal identifier as was the case with ACDA–6.

ACDA–7 Congressional Information and Attitudes Files—This system will be deleted. Active requests for information were merged into STATE–43 Congressional Correspondence and Voting Records.

ACDA–8 External Contracts (other than small purchases)—This system will be deleted. ACDA discontinued operation of the system in October 1989 when it was decided that there was no longer a requirement to monitor the status of these external contracts and the contract for providing the service expired. There is no requirement for the functions previously provided by ACDA–8 to be integrated with any Department system of records.

ACDA–9 Privacy Act Request Files—This system will be deleted. Active requests for information were merged into STATE–40 Privacy Act Request Records.

ACDA–10 Freedom of Information Act Requests—This system will be deleted. Active requests for information were merged into STATE–35 Public Affairs Records. The current STATE–35 will be combined with STATE–40 and will be renamed Information Access Programs Records (STATE–35). The STATE–40 number will be vacated and designated for future use.

ACDA–11 World Military Expenditures Mailing List—This system will continue operation within the Department of State's Bureau of Verification and Compliance. The ACDA–11 system identification will be deleted and the system will be designated as a new Department system, STATE–55 World Military Expenditures Mailing List. The former ACDA system description is being revised to reflect the organizational change. Changes will be noted in system location, storage media, safeguards, system manager, and notification procedures.

ACDA–12 ACDA Mailing List—This system will be deleted. The Department's review revealed that this system ceased to operate in the mid-1980's. It is believed that limited resources precluded the continued routine mailings of general arms control and disarmament information.

ACDA–13 Travel Authorization File—This system will be deleted. The active records will be merged into STATE–31 Personnel Records and/or STATE–32 Personnel Travel Records.

ACDA–14 Confidential Statement of Employment and Financial Interest Records—This system will be deleted. The records associated with ACDA–14 were merged into the Department's system designated as STATE–04 Confidential Statement of Employment and Financial Interests Records.

ACDA–16 Grievance Records—This system will be deleted. The active personnel grievance records associated with this system were merged into STATE–31 Personnel Records.

ACDA–17 Integrated Retrieval System—This system will be deleted. The system was discontinued in the early 1990's. Index records were converted to a more advanced computer system and the records stored on microfiche are still accessible. Retrieval is by subject and not by personal identifier.

The Department Intends To Take the Following Actions Related to the Privacy Act Systems of Records of the Former USIA

USIA–1 IBB Director's Executive Secretariat Files; USIA–2 Contract Talent Vendor Files—B/PA; and USIA–3 Employee Personnel Files—B/PA were systems of records specifically for the International Bureau of Broadcasting and therefore have been transferred to the Broadcasting Board of Governors.

USIA–4 Congressional Liaison—This system will be deleted. The responsibility for maintaining Congressional correspondence records is covered by STATE–43 Congressional Correspondence and Voting Records.

USIA–5 Director's Secretariat Staff Files—This system will be deleted. The active records were merged into STATE–28 Personality Cross-Reference Index to the Secretariat Automated Data Index Records, which will be renamed Electronic Correspondence Organizer Personality Cross-Reference Index to the Correspondence Management System.

USIA–6 Educational and Cultural Exchange Program—This system of records will replace the current STATE–8 Educational and Cultural Exchange Program Records, but retains the State designation. USIA–6 system identification will be deleted. The Department had previously transferred this function to USIA, but did not administratively remove its system of records issuance at that time.

USIA–7 Office of Arts America—The Department will assign STATE–62 to this system as a newly transferred function from the former USIA. USIA–7 system identification will be deleted.

USIA–8 Cultural Property Advisory Committee—The Department will assign STATE–63 to this system as a newly transferred function from the former USIA. USIA–8 system identification will be deleted.

USIA–9 Employee Statements of Financial Interest and Confidential Statements of Employment and Financial Interest—This system will be deleted. The records and functions of USIA–9 were merged into STATE–4 Confidential Statement of Employment and Financial Interests Records.

USIA–10 Legal Files—This system will be deleted. The records were merged into STATE–21 Legal Case Management Records.

USIA–11 Recruitment Records—This system has been deleted. Records were destroyed pursuant to an approved Records Disposition Schedule.

USIA–12 Privacy and Freedom of Information Acts Files—This system will be deleted. Active requests for information were merged into STATE–35 Public Affairs Records. STATE–35 will be combined with STATE–40 Privacy Act Request Records and renamed Information Access Programs Records (STATE–35). The STATE–40 system number will be vacated and designated for future use.

USIA–13 Service Contributors—The portion of this system relating to translators has been merged into STATE–37 Translators and Interpreters Records; and the records of the free-lance writers and photo-editors will be assigned STATE–64 as a new system of records. USIA–13 system identification will be deleted.

USIA–14 Speaker Databank/Name—The Department will assign STATE–65 to this system as a newly transferred function from the former USIA. USIA–14 system identification will be deleted.

USIA–15 Electronic Media Photographer—The Department will assign STATE–66 to this system as a newly transferred function from the former USIA. USIA–15 system identification will be deleted.

USIA–16 Employee Parking USIA—This system will be deleted. The comparable State system of records, STATE–52 Permit and Car Pool Records, will be updated to include former USIA employees.

USIA–17 Mailing Lists—This system will be deleted. Retrieval is by function rather than a personal identifier.

USIA–18 Official Travel Records—This system will be deleted. Active personnel travel records associated with the USIA–18 were merged into STATE–31 Personnel Records and/or STATE–32 Personnel Travel Records.

USIA–19 Salary Computation Records—This system will be deleted. The Department maintains similar information in STATE–30 Personnel Payroll Records and STATE–31 Personnel Records which will now include the categories of individuals previously covered in USIA–19.

USIA–20 Employee Payroll and Retirement System—This system will be deleted. The records from this system were merged into STATE–30 Personnel Payroll Records.

USIA–21 Records on Shipment of Effects, Unaccompanied Baggage and Automobiles—This system will be deleted. Active records associated with the USIA–21 system were merged into STATE–32 Personnel Travel Records.

USIA–22 Travel Authorization Obligation File—This system will be deleted. The active records associated with the USIA–22 were merged into STATE–32 Personnel Travel System.

USIA–23 Recruitment Records—This system will be deleted. The records from this system were merged into STATE–31 Personnel Records.

USIA–24 Employment Requests—This system will be deleted. The records from this system were merged into STATE–31 Personnel Records.

USIA–25 Employee Master Personnel Records—This system will be deleted. The active personnel records associated with the USIA–25 system were merged into STATE–31 Personnel Records.

USIA–26 Foreign Service Location File—This system will be deleted. The records from this system were merged into STATE–12 Foreign Service Employee Locator/Notification Records.

USIA–27 Foreign Service Selection Board Files—This system will be deleted. The records from this system were merged into STATE–31 Personnel Records.

USIA–28 Career Counseling Records—This system will be deleted. The records from this system will be merged into STATE–31 Personnel Records.

USIA–29 Officer/Specialist Assignments Requests—This system will be deleted. The records from this system will be merged into STATE–31 Personnel Records.

USIA–30 Advisory, Referral and Counseling Records—The system will be deleted. Retrieval is by subject rather than a personal identifier.

USIA–31 Employee Grievance Files—This system will be deleted. The active employee grievance records associated with the system were merged into STATE–31 Personnel Records.

USIA–32 Incentive Awards File—This system will be deleted. The records from this system were merged into STATE–31 Personnel Records.

USIA–33 Retirement and Insurance Records—This system will be deleted. The records from this system were merged into STATE–31 Personnel Records.

USIA–34 Senior Officer Files—This system will be deleted. The records from this system were merged into STATE–31 Personnel Records.

USIA–35 Solicitation Mailing List Application—This system will be deleted. Active records associated with USIA–35 were merged into the Department's Enhanced Automated Procurement and Contracting System (EAPCS) and/or STATE–38 Vendor Records. Administrative note: The EAPCS system will be reviewed to determine if information is retrieved using name or other personal identifiers. A system description will be written and published if appropriate.

USIA–36 U.S. Information Agency (USIA) Procurement Personnel Information System—This system will be deleted. Effective September 30, 1999 all warrants of USIA contracting officers expired and contracting officers from the former USIA will subsequently be covered under STATE–58 Procurement Career Management Information System.

USIA–37 Employee Training Files—This system will be deleted. The records from this system were merged into STATE–14 Foreign Service Institute Records.

USIA–38 Personnel Security and Integrity Records—This system will be deleted. All USIA security files were merged into STATE–36 Security Records.

USIA–39 Security Identification Cards and Automated Access Control—This system will be deleted. All USIA security files were merged into STATE–36 Security Records.

USIA–40 Locator Cards—This system will be deleted. The database was not transferred to the Department of State. The records were disposed of in accordance with an approved Records Disposition Schedule.

USIA–41 Office of Civil Rights Complaint Files—This system will be deleted. The active records associated with USIA–41 were merged into STATE–9 Equal Employment Opportunity Records.

USIA–42 Office of Civil Rights General Files—This system will be deleted. The records from USIA–42 have been incorporated into the Administrative Files of the Office of Equal Employment Opportunity and Civil Rights which is not a name-retrievable system of records.

USIA–43 Minority Group Data—This system will be deleted. The records from USIA–43 have been incorporated into the Administrative Files of the Office of Equal Employment Opportunity and Civil Rights which is not a name-retrievable system of records.

USIA–44 Senior Officer and Prominent Employee Information—This system will be deleted. Active records were merged into STATE–22 Records of Bureau of Public Affairs.

USIA–45 Office of Research—This system will be deleted. The records from this system were merged into STATE–36 Security Records.

USIA–46 Americans Residing in Foreign Countries—This system will be deleted. All records from USIA–46 have been disposed of in accordance with an approved Records Disposition Schedule. The Department maintains like information in STATE–05 Overseas Citizens Services which will now include the categories of individuals previously covered in USIA–46.

USIA–47 Overseas Personnel Files and Records—This system will be deleted. The records from this system were merged into STATE–31 Personnel Records.

Any persons with comments about the proposed actions covered by this notice may submit their comments in writing to Margaret Peppe, Chief; Programs and Policies Division; Office of IRM Programs and Services; Room 6073, SA–2; Department of State; 515 22nd Street, NW; Washington, DC 20522. The actions delineated above will be effective 40 days from the date

of publication, unless we receive comments that will result in a contrary determination.

Dated: September 7, 2000.

Patrick F. Kennedy,

Assistant Secretary for the Bureau of Administration.

[FR Doc. 00–23639 Filed 9–13–00; 8:45 am]

BILLING CODE 4710–24–M

DEPARTMENT OF STATE

Inspector General

[Public Notice 3418—corrected]

State Department Performance Review Board Members (Office of Inspector General)

In accordance with section 4314(c)(4) of the Civil Service Reform Act of 1978 (Pub. L. 95–454), the Office of Inspector General of the Department of State has appointed the following individuals to its Performance Review Board register.

Margaret P. Grafeld, Director, Office of Information Resources, Bureau of Administration, Department of State

Dennis Duquette, Deputy Inspector General for Management Policy, Department of Health and Human Services

Carol Levey, Assistant Inspector General for Investigations, Department of Defense

Dated: September 6, 2000.

Jacquelyn L. Williams-Bridgers,

Inspector General, Department of State.

[FR Doc. 00–23640 Filed 9–13–00; 8:45 am]

BILLING CODE 4710–42–M

DEPARTMENT OF STATE

[Public Notice 3416]

Determination by the Department of State Regarding Shrimp Imports From the Northern Prawn Fishery of Australia

SUMMARY: The Department of State has determined that shrimp harvested in Australia's Northern Prawn Fishery in Australia (''NPF'') are harvested in a manner that does not pose a threat of the incidental taking of sea turtles. Accordingly, the prohibitions on the importation of shrimp set forth in Section 609 of Public Law 101–162 do not apply to shrimp harvested in the Northern Prawn Fishery.

DATES: September 14, 2000.

FOR FURTHER INFORMATION CONTACT: Mr. David Hogan, Office of Marine Conservation, Bureau of Oceans and International Environmental and Scientific Affairs, Department of State, Washington, DC, telephone number (202) 647–2335.

SUPPLEMENTARY INFORMATION: Section 609 of Public Law 101–162 (''Section 609'') prohibits the importation of shrimp and products of shrimp harvested with commercial fishing technology that may adversely affect species of sea turtles protected under U.S. laws and regulations.

The President delegated authority for implementing Section 609 to the Department of State. On April 19, 1996, in the exercise of this authority, the Department of State determined that the import prohibitions of Section 609 do not apply to shrimp harvested under certain conditions, since such harvesting does not adversely affect sea turtle species. The Department of State published a notice in the **Federal Register** on July 8, 1999 (Public Notice 3086, 64 FR 36946), which revised the guidelines used by the Department in implementing Section 609 to elaborate these conditions.

The relevant provisions of those guidelines follow:

''B. Shrimp Harvested in a Manner Not Harmful to Sea Turtles

The Department of State has determined that the import prohibitions imposed pursuant to Section 609 do not apply to shrimp or products of shrimp harvested under the following conditions, since such harvesting does not adversely affect sea turtle species:

a. Shrimp harvested in an aquaculture facility in which the shrimp spend at least 30 days in a pond prior to be being harvested.

b. Shrimp harvested by commercial shrimp trawl vessels using TEDs comparable in effectiveness to those required in the United States. (emphasis added.)

c. Shrimp harvested exclusively by means that do not involve the retrieval of fishing nets by mechanical devices, such as winches, pulleys, power blocks or other devices providing mechanical advantage, or by vessels using gear that, in accordance with the U.S. program described above, would not require TEDs.

d. Shrimp harvested in any other manner or under any other circumstances that the Department of State may determine, following consultation with the National Marine Fisheries Service, does not pose a threat of the incidental taking of sea turtles. The Department of State shall publish any such determinations in the **Federal Register** and shall notify affected foreign governments and other interested parties directly.''

The revision of the Department of State's guidelines also included a decision to undertake regular examinations of the procedures that governments of uncertified nations have put in place for verifying the accurate completion of the DSP–121 forms. TED-caught shrimp harvested in a nation without such procedures will not be permitted to enter the United States.[1]

The Government of Australia passed a law effective on April 15, 2000, requiring the use of TEDs by all commercial shrimp trawl vessels operating in the Northern Prawn Fishery of Australia (''NPF''). Based on extensive information provided by the Government of Australia concerning this law and its implementation, and in consultation with the National Marine Fisheries Service, the Department has since determined that shrimp harvested in the NPF after April 15, 2000, meet the requirements for the exception relating to ''TED-caught'' shrimp.

The Department and the National Marine Fisheries Service also sent a team of experts to visit the fishery to examine the TEDs in use there and to assess the Government of Australia's measures to ensure compliance with their TEDs regulation. The team found that the vessels in the fishery were equipped with TEDs that were comparable or of the same design as those used in the U.S. fishery, and these TEDs would therefore be comparable in effectiveness. The team also found that the Australian Fishery Management Authority has measures in place to ensure the use of TEDs and to make the certification on the DSP–121 (Shrimp Exporter's/Importers Declaration) that shrimp products from the fishery were harvested using TEDs.

Consequently, shipments of Ted-caught shrimp from Australia harvested after April 15, 2000, in addition to shipments of TED-caught shrimp from Brazil, shall be allowed to enter the United States if accompanied by a properly completed DSP–121 form which includes the signature of an official of the harvesting country with direct knowledge of the method of harvest.

[1] On July 19, 2000 the U.S. Court of International Trade held that the Department's policy was on its face inconsistent with the terms of the statute, but declined to direct the Department to change its policy. *Turtle Island Restoration Network, et al.* v. *Mallett, et al.* (Court No. 98–09–02818) A decision on whether to appeal this case is currently pending. In the meantime, the Department is keeping in place its policy of permitting the imports of Ted-caught shrimp from countries that meet Department requirements.

Dated: September 8, 2000.

Mary Beth West,

Deputy Assistant Secretary for Oceans and Fisheries.

[FR Doc. 00–23638 Filed 9–13–00; 8:45 am]

BILLING CODE 4710–09–M

DEPARTMENT OF TRANSPORTATION

Federal Aviation Administration

Approval of Noise Compatibility Program; Corpus Christi International Airport, Corpus Christi, TX

AGENCY: Federal Aviation Administration, DOT.

ACTION: Notice

SUMMARY: The Federal Aviation Administration (FAA) announces its findings on the noise compatibility program submitted by city of Corpus Christi for Corpus Christi International Airport under the provisions of Title 49, U.S.C., Chapter 475 and CFR part 150. These findings are made in recognition of the description of Federal and non-federal responsibilities in Senate Report No. 96–52 (1980). On March 1, 2000, the FAA determined that the noise exposure maps submitted by the city of Corpus Christi for Corpus Christi International Airport under part 150 were in compliance with applicable requirements. On August 28, 2000, the Administrator approved the noise compatibility program. Most of the recommendations of the program were approved.

EFFECTIVE DATE: The effective date of the FAA's approval of the noise compatibility program for Corpus Christi International Airport is August 28, 2000.

FOR FURTHER INFORMATION CONTACT: Nan L. Terry, Department of Transportation, Federal Aviation Administration, 2601 Meacham Boulevard, Fort Worth, Texas, 76137, (817) 222–5607. Documents reflecting this FAA action may be reviewed at this same location.

SUPPLEMENTARY INFORMATION: This notice announces that the FAA has given its overall approval to the noise compatibility program for Corpus Christi International Airport, effective August 28, 2000.

Under Title 49 U.S.C., Section 47504 (hereinafter referred to as ''Title 49''), an airport operator who has previously submitted a noise exposure map may submit to the FAA a noise compatibility program which sets forth the measures taken or proposed by the airport operator for the reduction of existing non-compatible land uses within the area covered by the noise exposure maps. Title 49 requires such programs to be developed in consultation with interested and affected parties including local communities, government agencies, airport users, and FAA personnel.

Each airport noise compatibility program developed in accordance with Federal Aviation Regulations (FAR) part 150 is a local program, not a Federal program. The FAA does not substitute its judgment for that of the airport proprietor with respect to which measures should be recommended for action. The FAA's approval or disapproval of FAR part 150 program recommendations is measured according to the standards expressed in part 150 and Title 49 and is limited to the following determinations:

a. The noise compatibility program was developed in accordance with the provisions and procedures of FAR part 150;

b. Program measures are reasonably consistent with achieving the goals of reducing existing non-compatible land uses around the airport and preventing the introduction of additional non-compatible land uses;

c. Program measures would not create an undue burden on interstate or foreign commerce, unjustly discriminate against types or classes of aeronautical uses, violate the terms of airport grant agreements, or intrude into areas preempted by the Federal government; and

d. Program measures relating to the use of flight procedures can be implemented within the period covered by the program without derogating safety, adversely affecting the efficient use and management of the navigable airspace and air traffic control systems, or adversely affecting other powers and responsibilities of the Administrator prescribed by law.

Specific limitations with respect to the FAA's approval of an airport noise compatibility program are delineated in FAR part 150, § 150.5. Approval is not a determination concerning the acceptability of land uses under Federal, state, or local law. Approval does not by itself constitute a FAA implementing action. A request for Federal action or approval to implement specific noise compatibility measures may be required, and a FAA decision on the request may require an environmental assessment of the proposed action. Approval does not constitute a commitment by the FAA to financially assist in the implementation of the program nor a determination that all measures covered by the program are eligible for grant-in-aid funding from the FAA.

Where Federal funding is sought, requests for project grants must be submitted to the FAA Airports Division Office in Fort Worth, Texas.

The city of Corpus Christi submitted to the FAA on January 10, 2000, the noise exposure maps, descriptions, and other documentation produced during the noise compatibility planning study conducted from July 1995 through January 2000. The Corpus Christi International Airport noise exposure maps were determined by the FAA to be in compliance with applicable requirements on March 1, 2000. Notice of this determination was published in the **Federal Register** on March 14, 2000.

The Corpus Christi International Airport study contains a proposed noise compatibility program comprised of actions designed for phased implementation by airport management and adjacent jurisdictions from the date of study completion to the year 2005. It was requested that the FAA reevaluate and approve this material as a noise compatibility program as described in Title 49. The FAA began its review of the program on March 1, 2000, and was required by a provision of the Act to approve or disapprove the program within 180 days (other than the use of new flight procedures for noise control). Failure to approve or disapprove such program within the 180-day period shall be deemed to be an approval of such program.

The submitted program contained nine proposed actions for noise mitigation on and off the airport. The FAA completed its review and determined that the procedural and substantive requirements of Title 49 and FAR Part 150 have been satisfied. The overall of additional analysis. All of the approval and disapproval actions are more fully explained in the enclosed Record of Approval.

These determinations are set forth in detail in a Record of Approval endorsed by the Administrator on August 28, 2000. The Record of Approval, as well as other evaluation materials and the documents comprising the submittal, are available at the FAA office listed above and at the administrative offices of the Department of Aviation, City of Corpus Christi, 1000 International Drive, Corpus Chrisiti, Texas 78406–1801.

Issued in Fort Worth, Texas, September 7, 2000.

Naomi L. Saunders,

Manager, Airports Division.

[FR Doc. 00–23682 Filed 9–13–00; 8:45 am]

BILLING CODE 4910–13–M

DEPARTMENT OF TRANSPORTATION

Federal Aviation Administration

Notice of Intent To Rule on Application To Use the Revenue From a Passenger Facility Charge (PFC) at Central IL Regional Airport, Bloomington, Il

AGENCY: Federal Aviation Administration (FAA), DOT.

ACTION: Notice of intent to rule on application.

SUMMARY: This correction revises information from the previously published notice.

In notice document 00–21642 appearing on page 51638 in the issue of Thursday, August 24, 2000, under **SUPPLEMENTARY INFORMATION**, in the third column, in the 10th line, the date the FAA will approve or disapprove the application, in whole or in part, no later than should read, ''September 29, 2000''.

FOR FURTHER INFORMATION CONTACT: Denis Rewerts, Civil Engineer, Chicago Airports District Office, 2300 East Devon Ave., Room 320, Des Plaines, Illinois 60018, (847) 294–7195.

Issued in Des Plaines, Illinois on August 29, 2000.

Benito De Leon,

Manager, Planning and Programming Branch, Airports Division, Great Lakes Region.

[FR Doc. 00–23683 Filed 9–13–00; 8:45 am]

BILLING CODE 4910–13–M

DEPARTMENT OF TRANSPORTATION

Surface Transportation Board

[STB Finance Docket No. 33923]

Sandusky River Railroad Company, Inc.—Acquisition and Operation Exemption—Norfolk Southern Railway Company

Sandusky River Railroad Company, Inc. (SRRC), a noncarrier, has filed a verified notice of exemption under 49 CFR 1150.31 to acquire from Norfolk Southern Railway Company (NS) and operate approximately 7.47 miles of rail line in Fremont, Sandusky County, OH (line). The line is described as generally X-shaped and runs from milepost NS–267.95 to milepost NS–265.60 and from milepost EW–25.50 to milepost EW–20.38. In addition, the line will maintain an interchange with NS at EW–22.4 = T–37.2.

The parties report that they intend to consummate the transaction within approximately sixty days of the date of the exemption. The earliest the transaction can be consummated is September 8, 2000, 7 days after the exemption was filed.

This transaction is related to STB Finance Docket No. 33924, *Arthur J. Fournier—Continuance in Control Exemption—Sandusky River Railroad Company, Inc.,* wherein Arthur J. Fournier has concurrently filed a verified notice to continue in control of SRRC upon its becoming a Class III rail carrier.

If the verified notice contains false or misleading information, the exemption is void *ab initio.* Petitions to reopen the proceeding to revoke the exemption under 49 U.S.C. 10502(d) may be filed at any time. The filing of a petition to revoke will not automatically stay the transaction.

An original and 10 copies of all pleadings, referring to STB Finance Docket No. 33923, must be filed with the Surface Transportation Board, Office of the Secretary, Case Control Unit, 1925 K Street, NW., Washington, DC 20423–0001. In addition, a copy of each pleading must be served on Kelvin J. Dowd, Esq., Slover & Loftus, 1224 Seventeenth Street, NW., Washington, DC 20036.

Board decisions and notices are available on our website at ''WWW.STB.DOT.GOV.''

Decided: September 7, 2000.

By the Board, David M. Konschnik, Director, Office of Proceedings.

Vernon A. Williams,

Secretary.

[FR Doc. 00–23659 Filed 9–13–00; 8:45 am]

BILLING CODE 4915–00–P

DEPARTMENT OF TRANSPORTATION

Surface Transportation Board

[STB Finance Docket No. 33924]

Arthur J. Fournier—Continuance in Control Exemption—Sandusky River Railroad Company, Inc.

Arthur J. Fournier (Fournier), an individual, has filed a verified notice of exemption to continue in control of the Sandusky River Railroad Company, Inc. (SRRC), upon SRRC's becoming a Class III railroad.

The parties report that they intend for the exemption to take effect upon expiration of the notice period prescribed by 49 CFR 1180.4(g)(i). The earliest the transaction can be consummated is September 8, 2000, 7 days after the exemption was filed.

This transaction is related to STB Finance Docket No. 33923, *Sandusky River Railroad Company, Inc.—Acquisition and Operation Exemption—Norfolk Southern Railway Company,* wherein SRRC seeks to acquire from Norfolk Southern Railway Company and operate an approximate 7.47-mile rail line in Freemont, Sandusky County, OH.

Fournier currently controls one existing Class III railroad: Flats Industrial Railroad Company (FIRC), operating in the State of Ohio.

Fournier states that (i) SRRC does not connect with FIRC, (ii) the transaction is not part of a series of transactions that would connect SRRC with FIRC, and (iii) the transaction does not involve a Class I carrier. Therefore, the transaction is exempt from the prior approval requirements of 49 U.S.C. 11323. *See* 49 CFR 1180.2(d)(2).

Under 49 U.S.C. 10502(g), the Board may not use its exemption authority to relieve a rail carrier of its statutory obligation to protect the interests of its employees. Section 11326(c), however, does not provide for labor protection for transactions under sections 11324 and 11325 that involve only Class III rail carriers. Because this transaction involves Class III rail carriers only, the Board, under the statute, may not impose labor protective conditions for this transaction.

If the notice contains false or misleading information, the exemption is void *ab initio.* Petitions to revoke the exemption under 49 U.S.C. 10502(d) may be filed at any time. The filing of a petition to revoke will not automatically stay the transaction.

An original and 10 copies of all pleadings, referring to STB Finance Docket No. 33924, must be filed with the Surface Transportation Board, Office of the Secretary, Case Control Unit, 1925 K Street, NW., Washington, DC 20423–0001. In addition, a copy of each pleading must be served on Kelvin J. Dowd, Esq., Slover & Loftus, 1224 Seventeenth Street, NW., Washington, DC 20036.

Board decisions and notices are available on our website at ''WWW.STB.DOT.GOV.''

Decided: September 7, 2000.

By the Board, David M. Konschnik, Director, Office of Proceedings.

Vernon A. Williams,

Secretary.

[FR Doc. 00–23660 Filed 9–13–00; 8:45 am]

BILLING CODE 4915–00–P

DEPARTMENT OF TRANSPORTATION

Surface Transportation Board

[STB Docket Nos. AB–486 (Sub-No. 3X) and AB–33 (Sub-No. 155X)]

Kyle Railroad Company—Discontinuance Exemption—in Marshall, Washington, and Cloud Counties, KS and Union Pacific Railroad Company—Abandonment Exemption—in Marshall, Washington, and Cloud Counties, KS

On August 25, 2000, Kyle Railroad Company (KYLE) and Union Pacific Railroad Company (UP) jointly filed with the Surface Transportation Board (Board) a petition under 49 U.S.C. 10502 for exemption from the provisions of 49 U.S.C. 10903 for UP to abandon and KYLE to discontinue service on a line of railroad known as the Frankfort Branch, between milepost 409.1 near Frankfort and milepost 472.0 at Ames, in Marshall, Washington, and Cloud Counties, KS, a distance of 60.12 miles.[1] The line traverses U.S. Postal Service Zip Codes 66411, 66427, 66548, 66933, 66937, 66938, 66943, 66953, and 66962, and includes stations at Blue Rapids (milepost 425.6), Waterville (milepost 430.5), Barnes (milepost 437.7), Greenleaf (milepost 443.6), Linn (milepost 450.6), Palmer (milepost 455.4), Clifton (milepost 464.4), and Clyde (milepost 471.0).

The line does not contain federally granted rights-of-way. Any documentation in petitioners' possession will be made available promptly to those requesting it.

The interest of railroad employees will be protected by the conditions imposed in *Oregon Short Line R. Co.—Abandonment—Goshen,* 360 I.C.C. 91 (1979).

By issuing this notice, the Board is instituting an exemption proceeding pursuant to 49 U.S.C. 10502(b). A final decision will be issued by December 13, 2000.

Any offer of financial assistance (OFA) under 49 CFR 1152.27(b)(2) will be due no later than 10 days after service of a decision granting the petition for exemption. Each offer must be accompanied by a $1,000 filing fee. *See* 49 CFR 1002.2(f)(25).

All interested persons should be aware that, following abandonment of rail service and salvage of the line, the line may be suitable for other public use, including interim trail use. Any request for a public use condition under 49 CFR 1152.28 or for trail use/rail banking under 49 CFR 1152.29 will be due no later than October 4, 2000. Each trail use request must be accompanied by a $150 filing fee. *See* 49 CFR 1002.2(f)(27).

All filings in response to this notice must refer to STB Docket No. AB–486 (Sub-No. 3X) and STB Docket No. AB–33 (Sub-No. 155X) and must be sent to: (1) Surface Transportation Board, Office of the Secretary, Case Control Unit, 1925 K Street, NW., Washington, DC 20423–0001; and (2) Fritz R. Kahn, 1920 N Street, NW., 8th floor, Washington, DC 20036–1601. Replies to the petition are due on or before October 4, 2000.

Persons seeking further information concerning abandonment procedures may contact the Board's Office of Public Services at (202) 565–1592 or refer to the full abandonment or discontinuance regulations at 49 CFR part 1152. Questions concerning environmental issues may be directed to the Board's Section of Environmental Analysis (SEA) at (202) 565–1545. [TDD for the hearing impaired is available at 1–800–877–8339.]

An environmental assessment (EA) (or environmental impact statement (EIS), if necessary) prepared by SEA will be served upon all parties of record and upon any agencies or other persons who commented during its preparation. Other interested persons may contact SEA to obtain a copy of the EA (or EIS). EAs in these abandonment proceedings normally will be made available within 60 days of the filing of the petition. The deadline for submission of comments on the EA will generally be within 30 days of its service.

Board decisions and notices are available on our website at ''WWW.STB.DOT.GOV.''

Decided: September 7, 2000.

By the Board, David M. Konschnik, Director, Office of Proceedings.

Vernon A. Williams,

Secretary.

[FR Doc. 00–23630 Filed 9–13–00; 8:45 am]

BILLING CODE 4915–00–P

[1] Petitioners state that a milepost equation of 421.10=423.88, near Blue Rapids, KS, makes the line 2.78 miles shorter than the terminal mileposts would otherwise indicate.

DEPARTMENT OF THE TREASURY

Submission for OMB Review; Comment Request

September 7, 2000.

The Department of the Treasury has submitted the following public information collection requirement(s) to OMB for review and clearance under the Paperwork Reduction Act of 1995, Public Law 104–13. Copies of the submission(s) may be obtained by calling the Treasury Bureau Clearance Officer listed. Comments regarding this information collection should be addressed to the OMB reviewer listed and to the Treasury Department Clearance Officer, Department of the Treasury, Room 2110, 1425 New York Avenue, NW., Washington, DC 20220.

DATES: Written comments should be received on or before October 16, 2000, to be assured of consideration.

Customs Service (CUS)

OMB Number: 1515–0013.
Form Number: Customs Form 3171.
Type of Review: Extension.
Title: Application-Permit-Special License Unlading/Lading, Overtime Services.
Description: Customs Form 3171, is used by commercial carriers and importers to request permission to unlade imported merchandise, baggage, or passengers for overtime services of Customs officers in connection with lading or unlading of merchandise, or the entry or clearance of a vessel, including the boarding of a vessel for preliminary supplies, ship's stores, sea stores, or equipment not to be reladen, which is subject to free or duty-paid entry.
Respondents: Business or other for-profit, individuals or households, not-for-profit institutions.
Estimated Number of Respondents: 1,500.
Estimated Burden Hours Per Respondent: 6 minutes.
Frequency of Response: On occasion.
Estimated Total Reporting Burden: 39,900 hours.

OMB Number: 1515–0086.
Form Number: Customs Forms 214, 214A, 214B, 214C, and 216.
Type of Review: Extension.
Title: Application for Foreign Trade Zone Admission and Status Designation.
Description: This collection is used by business firms which bring merchandise into a foreign trade zone, to register the admission of such merchandise to zones and to apply for the appropriate zone status.
Respondents: Business or other for-profit, individuals or households, not-for-profit institutions.
Estimated Number of Respondents: 10,000.
Estimated Burden Hours Per Respondent: 15 minutes per form.
Frequency of Response: On occasion.
Estimated Total Reporting Burden: 79,500 hours.

OMB Number: 1515–0101.
Form Number: None.
Type of Review: Extension.

Title: Holders or Containers Which Enter the United States Duty Free.

Description: The marking is used to provide for duty free entry of holders or containers which were manufactured in the United States and exported and returned. The regulations provide for free entry of holders and containers of foreign manufacture if duty has been paid before.

Respondents: Business or other for-profit, individuals or households, not-for-profit institutions.

Estimated Number of Respondents: 20.

Estimated Burden Hours Per Respondent: 4 hours.

Frequency of Response: On occasion.

Estimated Total Reporting Burden: 90 hours.

Clearance Officer: J. Edgar Nichols, (202) 927–1426, U.S. Customs Service, Information Services Branch, Ronald Reagan Building, 1300 Pennsylvania Avenue, NW., Room 3.2.C, Washington, DC 20229.

OMB Reviewer: Alexander T. Hunt(202) 395–7860, Office of Management and Budget, Room 10202, New Executive Office Building, Washington, DC 20503.

Lois K. Holland,

Departmental Reports, Management Officer.

[FR Doc. 00–23558 Filed 9–14–00; 8:45 am]

BILLING CODE 4820–02–U

DEPARTMENT OF THE TREASURY

Submission for OMB Review; Comment Request

August 31, 2000.

The Department of Treasury has submitted the following public information collection requirement(s) to OMB for review and clearance under the Paperwork Reduction Act of 1995, Public Law 104–13. Copies of the submission(s) may be obtained by calling the Treasury Bureau Clearance Officer listed. Comments regarding this information collection should be addressed to the OMB reviewer listed and to the Treasury Department Clearance Officer, Department of the Treasury, Room 2110, 1425 New York Avenue, NW., Washington, DC 20220.

DATES: Written comments should be received on or before October 16, 2000, to be assured of consideration.

Internal Revenue Service (IRS)

OMB Number: 1545–0118.

Form Number: IRS Form 1099–PATR.

Type of Review: Extension.

Title: Taxable Distributions Received From Cooperatives.

Description: Form 1099–PATR is used to report patronage dividends paid by cooperatives (Internal Revenue Code section 6044). The information is used by IRS to verify reporting compliance on the part of the recipient.

Respondents: Business or other for-profit.

Estimated Number of Respondents/ Recordkeepers: 4,200.

Estimated Burden Hours Per Respondent/Recordkeeper: 15 minutes.

Estimated Total Reporting/ Recordkeeping Burden: 509,895 hours.

Clearance Officer: Garrick Shear, Internal Revenue Service, Room 5244, 1111 Constitution Avenue, NW., Washington, DC 20224.

OMB Reviewer: Alexander T. Hunt, (202) 395–7860, Office of Management and Budget, Room 10202, New Executive Office Building, Washington, DC 20503.

Lois K. Holland,

Departmental Reports, Management Officer.

[FR Doc. 00–23559 Filed 9–13–00; 8:45 am]

BILLING CODE 4830–01–U

DEPARTMENT OF THE TREASURY

Submission for OMB Review; Comment Request

September 7, 2000.

The Department of Treasury has submitted the following public information collection requirement(s) to OMB for review and clearance under the Paperwork Reduction Act of 1995, Public Law 104–13. Copies of the submission(s) may be obtained by calling the Treasury Bureau Clearance Officer listed. Comments regarding this information collection should be addressed to the OMB reviewer listed and to the Treasury Department Clearance Officer, Department of the Treasury, Room 2110, 1425 New York Avenue, NW., Washington, DC 20220.

DATES: Written comments should be received on or before October 16, 2000, to be assured of consideration.

Internal Revenue Service (IRS)

OMB Number: 1545–0155.

Form Number: IRS Form 3468.

Type of Review: Revision.

Title: Investment Credit.

Description: Taxpayers are allowed a credit against their income tax for certain expenses they incur for their trades or businesses. Form 3468 is used to compute this investment tax credit. The information collected is used by the IRS to verify that the credit has been correctly computed.

Respondents: Business or other for-profit, individuals or households, not-for-profit institutions, Farms.

Estimated Number of Respondents/ Recordkeepers: 22,575.

Estimated Burden Hours Per Respondent/Recordkeeper:

Recordkeeping—12 hr., 55 min.

Learning about the law or the form—3 hr., 35 min.

Preparing and sending the form to the IRS—3 hr., 57 min.

Frequency of Response: Annually.

Estimated Total Reporting/ Recordkeeping Burden: 461,392 hours.

OMB Number: 1545–1282.

Form Number: IRS Form 8830.

Type of Review: Revision.

Title: Enhanced Oil Recovery Credit.

Description: The enhanced oil recovery credit is 15% of qualified costs paid or incurred during the year. The purpose is to get more oil from the wells. The IRS uses the information on the form to ensure that the credit is correctly computed.

Respondents: Business or other for-profit, individuals or households.

Estimated Number of Respondents/ Recordkeepers: 3,623.

Estimated Burden Hours Per Respondent/Recordkeeper:

Recordkeeping—6 hr., 42 min.

Learning about the law or the form—1 hr., 5 min.

Preparing and sending the form to the IRS—1 hr., 15 min.

Frequency of Response: Annually.

Estimated Total Reporting/ Recordkeeping Burden: 32,752 hours.

Clearance Officer: Garrick Shear, Internal Revenue Service, Room 5244, 1111 Constitution Avenue, NW, Washington, DC 20224

OMB Reviewer: Alexander T. Hunt (202) 395–7860, Office of Management and Budget, Room 10202, New Executive Office Building, Washington, DC 20503

Lois K. Holland,

Departmental Reports Management Officer.

[FR Doc. 00–23560 Filed 9–13–00; 8:45 am]

BILLING CODE 4830–01–U

DEPARTMENT OF THE TREASURY

Office of the Comptroller of the Currency

Proposed Renewal of Information Collection; Comment Request

AGENCY: Office of the Comptroller of the Currency (OCC), Treasury.

ACTION: Notice and request for comment.

SUMMARY: The OCC, as part of its continuing effort to reduce paperwork

and respondent burden, invites the general public and other Federal agencies to take this opportunity to comment on a continuing information collection, as required by the Paperwork Reduction Act of 1995. Currently, the OCC is soliciting comment concerning its renewal, without change, of an information collection titled, ''Disclosure of Financial and Other Information by National Banks—12 CFR Part 18.''

DATES: You should submit written comments by November 13, 2000.

ADDRESSES: You should direct all written comments to the Communications Division, Attention: 1557–0182, Third Floor, Office of the Comptroller of the Currency, 250 E Street, SW, Washington, DC 20219. In addition, you may send comments by facsimile transmission to (202) 874–5274, or by electronic mail to regs.comments@occ.treas.gov.

FOR FURTHER INFORMATION CONTACT: You can request additional information or a copy of the collection from Jessie Dunaway or Camille Dixon, (202) 874–5090, Legislative and Regulatory Activities Division (1557–0182), Office of the Comptroller of the Currency, 250 E Street, SW, Washington, DC 20219. You can inspect and photocopy the comments at the OCC's Public Reference Room, 250 E Street, SW, Washington, DC, between 9 a.m. and 5 p.m. on business days. You can make an appointment to inspect the comments by calling (202) 874–5043.

SUPPLEMENTARY INFORMATION: The OCC is proposing to extend OMB approval of the following information collection:

Title: Disclosure of Financial and Other Information by National Banks—12 CFR 18.

OMB Number: 1557–0182.

Form Number: None.

Abstract: This submission covers an existing regulation and involves no change to the regulation or to the information collections embodied in the regulation. The OCC requests only that OMB renew its approval of the information collections in the current regulation.

This disclosure of information is needed to facilitate informed decisionmaking by existing and potential customers and investors by improving public understanding of, and confidence in, the financial condition of an individual national bank. The disclosed information is used by depositors, security holders, and the general public in evaluating the condition of, and deciding whether to do business with, a particular national bank. Disclosure and increased public knowledge complements OCC's efforts to promote the safety and soundness of national banks and the national banking system.

The information collections contained in part 18 are found in sections 18.4(c) and 18.8. Section 18.4(c) permits a bank to prepare a optional narrative for inclusion in its annual disclosure statement. Section 18.8 requires that a national bank promptly furnish materials in response to a request.

Type of Review: Extension, without change, of a currently approved collection.

Affected Public: Businesses or other for-profit.

Estimated Number of Respondents: 2,800.

Estimated Total Annual Responses: 2,800.

Frequency of Response: Annual.

Estimated Total Annual Burden: 1,400 burden hours.

An agency may not conduct or sponsor, and a person is not required to respond to, a collection of information of information unless the collection displays a valid OMB control number.

Comments: Comments submitted in response to this notice will be summarized and included in the request for OMB approval. All comments will become a matter of public record. Comments are invited on:

(a) Whether the collection of information is necessary for the proper performance of the functions of the agency, including whether the information has practical utility;

(b) The accuracy of the agency's estimate of the burden of the collection of information;

(c) Ways to enhance the quality, utility, and clarity of the information to be collected;

(d) Ways to minimize the burden of the collection on respondents, including through the use of automated collection techniques or other forms of information technology; and

(e) Estimates of capital or startup costs and costs of operation, maintenance, and purchase of services to provide information.

Dated: September 8, 2000.

Mark J. Tenhundfeld,

Assistant Director, Legislative & Regulatory Activities Division.

[FR Doc. 00–23602 Filed 9–13–00; 8:45 am]

BILLING CODE 4810–33–P

DEPARTMENT OF VETERANS AFFAIRS

[OMB Control No. 2900–0002]

Proposed Information Collection Activity: Proposed Collection; Comment Request

AGENCY: Veterans Benefits Administration, Department of Veterans Affairs.

ACTION: Notice.

SUMMARY: The Veterans Benefits Administration (VBA), Department of Veterans Affairs (VA), is announcing an opportunity for public comment on the proposed collection of certain information by the agency. Under the Paperwork Reduction Act (PRA) of 1995, Federal agencies are required to publish notice in the **Federal Register** concerning each proposed collection of information, including each proposed reinstatement, without change, of a previously approved collection for which approval has expired, and allow 60 days for public comment in response to the notice. This notice solicits comments on information needed to determine eligibility and benefit rates for veterans' disability pension and compensation based on individual unemployability.

DATES: Written comments and recommendations on the proposed collection of information should be received on or before November 13, 2000.

ADDRESSES: Submit written comments on the collection of information to Nancy J. Kessinger, Veterans Benefits Administration (20S52), Department of Veterans Affairs, 810 Vermont Avenue, NW, Washington, DC 20420. Please refer to ''OMB Control No. 2900–0002'' in any correspondence.

FOR FURTHER INFORMATION CONTACT: Nancy J. Kessinger at (202) 273–7079 or FAX (202) 275–5947.

SUPPLEMENTARY INFORMATION: Under the PRA of 1995 (Pub. L. 104–13; 44 U.S.C., 3501–3520), Federal agencies must obtain approval from the Office of Management and Budget (OMB) for each collection of information they conduct or sponsor. This request for comment is being made pursuant to Section 3506(c)(2)(A) of the PRA.

With respect to the following collection of information, VBA invites comments on: (1) Whether the proposed collection of information is necessary for the proper performance of VBA's functions, including whether the information will have practical utility; (2) the accuracy of VBA's estimate of the

burden of the proposed collection of information; (3) ways to enhance the quality, utility, and clarity of the information to be collected; and (4) ways to minimize the burden of the collection of information on respondents, including through the use of automated collection techniques or the use of other forms of information technology.

Title: Income-Net Worth and Employment Statement, VA Form 21–527.

OMB Control Number: 2900–0002.

Type of Review: Reinstatement, without change, of a previously approved collection for which approval has expired.

Abstract: VA Form 21–527 is used to solicit income, net worth, and employment information. The information is used to determine eligibility and benefit rates for veteran's disability pension and compensation based on individual unemployability.

Affected Public: Individuals or households.

Estimated Annual Burden: 104,440.

Estimated Average Burden Per Respondent: 60 minutes.

Frequency of Response: On occasion.

Estimated Number of Respondents: 104,440.

Dated: July 19, 2000.

By direction of the Secretary.

Donald L. Neilson,

Director, Information Management Service.

[FR Doc. 00–23570 Filed 9–13–00; 8:45 am]

BILLING CODE 8320–01–P

DEPARTMENT OF VETERANS AFFAIRS

[OMB Control No. 2900–0092]

Proposed Information Collection Activity: Proposed Collection; Comment Request

AGENCY: Veterans Benefits Administration, Department of Veterans Affairs.

ACTION: Notice.

SUMMARY: The Veterans Benefits Administration (VBA), Department of Veterans Affairs (VA) is announcing an opportunity for public comment on the proposed collection of information by the agency. Under the Paperwork Reduction Act (PRA) of 1995, Federal agencies are required to publish notice in the **Federal Register** concerning each proposed collection of information, including each proposed reinstatement, with change, of a previously approved collection for which approval has expired, and allow 60 days for public comment in response to the notice. This notice solicits comments on the information needed to evaluate veteran claimants and assist eligible veterans to plan a suitable program of vocational rehabilitation.

DATES: Written comments and recommendations on the proposed collection of information should be received on or before November 13, 2000.

ADDRESSES: Submit written comments on the collection of information to Nancy J. Kessinger, Veterans Benefits Administration (20S52), Department of Veterans Affairs, 810 Vermont Avenue, NW, Washington, DC 20420. Please refer to ''OMB Control No. 2900–0092'' in any correspondence.

FOR FURTHER INFORMATION CONTACT: Nancy J. Kessinger at (202) 273–7079 or FAX (202) 275–5947.

SUPPLEMENTARY INFORMATION: Under the PRA of 1995 (Pub. L. 104–13; 44 U.S.C., 3501–3520), Federal agencies must obtain approval from the Office of Management and Budget (OMB) for each collection of information they conduct or sponsor. This request for comment is being made pursuant to Section 3506(c)(2)(A) of the PRA.

With respect to the following collection of information, VBA invites comments on: (1) Whether the proposed collection of information is necessary for the proper performance of VBA's functions, including whether the information will have practical utility; (2) the accuracy of VBA's estimate of the burden of the proposed collection of information; (3) ways to enhance the quality, utility, and clarity of the information to be collected; and (4) ways to minimize the burden of the collection of information on respondents, including through the use of automated collection techniques or the use of other forms of information technology.

Title: Counseling Record—Personal Information, VA Form 28–1902.

OMB Control Number: 2900–0092.

Type of Review: Reinstatement, with change, of a previously approved collection for which approval has expired.

Abstract: A counseling psychologist or vocational rehabilitation counselor uses the form to evaluate veteran claimants and assist eligible veterans to plan a suitable program of vocational rehabilitation. If needed, VA must develop a program of assistance and services to improve the veteran's potential to participate in vocational rehabilitation. VA must also provide counseling services to help a veteran or other beneficiary eligible under another educational benefit chapter to select an educational, training, or employment objective.

Affected Public: Individuals or households.

Estimated Annual Burden: 30,000 hours.

Estimated Average Burden Per Respondent: 30 minutes.

Frequency of Response: On occasion.

Estimated Number of Respondents: 60,000.

Dated: August 25, 2000.

By direction of the Acting Secretary.

Donald L. Neilson,

Director, Information Management Service.

[FR Doc. 00–23571 Filed 9–13–00; 8:45 am]

BILLING CODE 8320–01–P

DEPARTMENT OF VETERANS AFFAIRS

[OMB Control No. 2900–0432]

Proposed Information Collection Activity: Proposed Collection; Comment Request

AGENCY: Veterans Benefits Administration, Department of Veterans Affairs.

ACTION: Notice.

SUMMARY: The Veterans Benefits Administration (VBA), Department of Veterans Affairs (VA), is announcing an opportunity for public comment on the proposed collection of certain information by the agency. Under the Paperwork Reduction Act (PRA) of 1995, Federal agencies are required to publish notice in the **Federal Register** concerning each proposed collection of information, including each proposed extension of a currently approved collection, and allow 60 days for public comment in response to the notice. This notice solicits comments for information needed to solicit competitive bids for property repairs exceeding $1,000.00.

DATES: Written comments and recommendations on the proposed collection of information should be received on or before November 13, 2000.

ADDRESSES: Submit written comments on the collection of information to Nancy J. Kessinger, Veterans Benefits Administration (20S52), Department of Veterans Affairs, 810 Vermont Avenue, NW, Washington, DC 20420. Please refer to ''OMB Control No. 2900–0432'' in any correspondence.

FOR FURTHER INFORMATION CONTACT: Nancy J. Kessinger at (202) 273–7079 or FAX (202) 275–5947.

SUPPLEMENTARY INFORMATION: Under the PRA of 1995 (Pub. L. 104–13; 44 U.S.C., 3501–3520), Federal agencies must obtain approval from the Office of Management and Budget (OMB) for each collection of information they conduct or sponsor. This request for comment is being made pursuant to Section 3506(c)(2)(A) of the PRA.

With respect to the following collection of information, VBA invites comments on: (1) whether the proposed collection of information is necessary for the proper performance of VBA's functions, including whether the information will have practical utility; (2) the accuracy of VBA's estimate of the burden of the proposed collection of information; (3) ways to enhance the quality, utility, and clarity of the information to be collected; and (4) ways to minimize the burden of the collection of information on respondents, including through the use of automated collection techniques or the use of other forms of information technology.

Title: Invitation, Bid, and/or Acceptance or Authorization, VA Form 26–6724.

OMB Control Number: 2900–0432.

Type of Review: Extension of a currently approved collection.

Abstract: The form is used to solicit competitive bids; serves as a work order for repair of properties acquired by VA; serves as a record of contractor bids, VA acceptance of bids, inspection of completed work and contractor invoices and payments.

Affected Public: Business or other for profit.

Estimated Annual Burden: One (1) hour is being claimed for inventory purposes. The solicitations of bids is a common practice in the real estate management industry, and the submission of bids is routine with repair contractors.

Estimated Average Burden Per Respondent: 30 minutes.

Frequency of Response: On occasion.

Estimated Number of Respondents: 60,000.

Dated: August 29, 2000.

By direction of the Acting Secretary.

Donald L. Neilson,

Director, Information Management Service.

[FR Doc. 00–23572 Filed 9–13–00; 8:45 am]

BILLING CODE 8320–01–P

DEPARTMENT OF VETERANS AFFAIRS

[OMB Control No. 2900–0438]

Proposed Information Collection Activity: Proposed Collection; Comment Request

AGENCY: Office of Information and Technology, Department of Veterans Affairs.

ACTION: Notice.

SUMMARY: The Office of Information and Technology (OI&T), Department of Veterans Affairs, is announcing an opportunity for public comment on the proposed collection of certain information by the agency. Under the Paperwork Reduction Act (PRA) of 1995, Federal agencies are required to publish notice in the **Federal Register** concerning each proposed collection of information, including each proposed extension of a currently approved collection, and allow 60 days for public comment in response to the notice. This notice solicits comments on requirements relating to the release of names and addresses of veterans and their dependents to non-profit organizations.

DATES: Written comments and recommendations on the proposed collection of information should be received on or before November 13, 2000.

ADDRESSES: Submit written comments on the collection of information to Denise McLamb, Information Management Service (045A4), Department of Veterans Affairs, 810 Vermont Avenue, NW, Washington, DC 20420. Please refer to ''OMB Control No. 2900–0438'' in any correspondence.

FOR FURTHER INFORMATION CONTACT: Denise McLamb at (202) 273–8030 or FAX (202) 273–5981.

SUPPLEMENTARY INFORMATION: Under the PRA of 1995 (Public Law 104–13; 44 U.S.C., 3501–3520), Federal agencies must obtain approval from the Office of Management and Budget (OMB) for each collection of information they conduct or sponsor. This request for comment is being made pursuant to Section 3506(c)(2)(A) of the PRA.

With respect to the following collection of information, OI&T invites comments on: (1) Whether the proposed collection of information is necessary for the proper performance of functions, including whether the information will have practical utility; (2) the accuracy of the burden estimate of the proposed collection of information; (3) ways to enhance the quality, utility, and clarity of the information to be collected; and (4) ways to minimize the burden of the collection of information on respondents, including through the use of automated collection techniques or the use of other forms of information technology.

Title: 38 CFR 1.519 Lists of Names and Addresses.

OMB Control Number: 2900–0438.

Type of Review: Extension of a previously approved collection.

Abstract: Title 38, U.S.C., 5701(f)(1) authorizes VA to disclose mailing lists of veterans and their dependents to nonprofit organizations, but only for certain specific and narrow purposes. Criminal penalties are provided for improper use of the list by the organization in violation of subsection (f) limitations. The information collection in this regulation ensures that any disclosure of a list under this subsection is authorized by law. VA must ascertain that the applicant is a nonprofit organization and intends to use the list for a proper purpose; if not, Title 38, U.S.C., 5701(a) prohibits disclosure. The additional information collection (specific geographic locations, point of contact, type of output and signature of organization head) is necessary to ensure timely and accurate processing of each application. Failure to obtain this information will prevent the Department from fulfilling its statutory obligations.

Affected Public: Not-for-profit institutions and State, Local or Tribal Government.

Estimated Annual Burden: 50 hours.

Estimated Average Burden Per Respondent: 60 minutes.

Frequency of Response: On occasion.

Estimated Number of Respondents: 50.

Dated: August 30, 2000.

By direction of the Acting Secretary.

Donald L. Neilson,

Director, Information Management Service.

[FR Doc. 00–23573 Filed 9–13–00; 8:45 am]

BILLING CODE 8320–01–P

DEPARTMENT OF VETERANS AFFAIRS

[OMB Control No. 2900–0523]

Proposed Information Collection Activity: Proposed Collection; Comment Request

AGENCY: Veterans Benefits Administration, Department of Veterans Affairs.

ACTION: Notice.

SUMMARY: The Veterans Benefits Administration (VBA), Department of

Veterans Affairs (VA), is announcing an opportunity for public comment on the proposed collection of certain information by the agency. Under the Paperwork Reduction Act (PRA) of 1995, Federal agencies are required to publish notice in the **Federal Register** concerning each proposed collection of information, including each proposed extension of a currently approved collection, and allow 60 days for public comment in response to the notice. This notice solicits comments for information to determine the ability of a veteran-applicant to qualify for any type VA-guaranteed loan.

DATES: Written comments and recommendations on the proposed collection of information should be received on or before November 13, 2000.

ADDRESSES: Submit written comments on the collection of information to Nancy J. Kessinger, Veterans Benefits Administration (20S52), Department of Veterans Affairs, 810 Vermont Avenue, NW, Washington, DC 20420. Please refer to ''OMB Control No. 2900–0523'' in any correspondence.

FOR FURTHER INFORMATION CONTACT: Nancy J. Kessinger at (202) 273–7079 or FAX (202) 275–5947.

SUPPLEMENTARY INFORMATION: Under the PRA of 1995 (Pub. L. 104–13; 44 U.S.C., 3501—3520), Federal agencies must obtain approval from the Office of Management and Budget (OMB) for each collection of information they conduct or sponsor. This request for comment is being made pursuant to Section 3506(c)(2)(A) of the PRA.

With respect to the following collection of information, VBA invites comments on: (1) Whether the proposed collection of information is necessary for the proper performance of VBA's functions, including whether the information will have practical utility; (2) the accuracy of VBA's estimate of the burden of the proposed collection of information; (3) ways to enhance the quality, utility, and clarity of the information to be collected; and (4) ways to minimize the burden of the collection of information on respondents, including through the use of automated collection techniques or the use of other forms of information technology.

Title: Loan Analysis, VA Form 26–6393.

OMB Control Number: 2900–0523.

Type of Review: Extension of a currently approved collection.

Abstract: The form is completed by representatives of lending institutions to determine the veteran-borrower's ability to qualify for a VA guaranteed loan. The information is used by VA as evidence of the lender's adherence to VA credit standards.

Affected Public: Business or other for profit.

Estimated Annual Burden: 100,000 hours.

Estimated Average Burden Per Respondent: 30 minutes.

Frequency of Response: On occasion.

Estimated Number of Respondents: 200,000.

Dated: August 29, 2000.

By direction of the Acting Secretary.

Donald L. Neilson,

Director, Information Management Service.

[FR Doc. 00–23574 Filed 9–13–00; 8:45 am]

BILLING CODE 8320–01–P

DEPARTMENT OF VETERANS AFFAIRS

Geriatrics and Gerontology Advisory Committee, Notice of Charter Renewal

This gives notice under the Federal Advisory Committee Act (Pub. L. 92–463) of October 6, 1972, that the Department of Veterans' Affairs Geriatrics and gerontology Advisory Committee has been renewed for a 2-year period beginning September 5, 2000, through September 5, 2002.

Dated: September 5, 2000.

By direction of the Acting Secretary.

Marvin R. Eason,

Committee Management Officer.

[FR Doc. 00–23568 Filed 9–13–00; 8:45 am]

BILLING CODE 8320–01–M

DEPARTMENT OF VETERANS AFFAIRS

Privacy Act of 1974; Amendment of Systems Notice; Appointment of New Systems Manager

AGENCY: Department of Veterans Affairs.

ACTION: Notice; amendment of system of records.

SUMMARY: As required by the Privacy Act of 1974, 5 U.S.C. 552(a)(E), notice is hereby given that the Department of Veterans Affairs (VA) is changing the system manager, system number, and address in this system of records.

Notice is hereby given that VA is revising certain paragraphs in the system of records entitled ''Workers' Compensation/Occupational Safety and Health Management Information System'' (*6VA058) which was first published in the **Federal Register** at Volume 60, Number 60 on March 29, 1995. The system number, system manager and address are being revised to reflect a change in the designation of the office which is responsible for the maintenance of these records. In addition, a ''Purpose'' paragraph is being included. VA is republishing this system notice in its entirety at this time.

DATES: These amendments are effective on September 14, 2000.

FOR FURTHER INFORMATION CONTACT: Director, Occupational Safety and Health (00S1), Office of Administration, VA Headquarters, 810 Vermont Avenue, NW, Washington, DC 20420, 202–273–9742.

Approved: August 30, 2000.

Hershel W. Gober,

Acting Secretary of Veterans Affairs.

86VA00S1

SYSTEM NAME:

Workers' Compensation/Occupational Safety and Health Management Information System-VA (WC/OSH–MIS).

SYSTEM LOCATION:

Department of Veterans Affairs (VA) Austin Automation Center, Austin, Texas, and information in the database can be viewed and downloaded by employees with workers compensation case management and safety responsibilities at VA employing facilities.

CATEGORIES OF INDIVIDUALS COVERED BY THE SYSTEM:

All VA and former VA employees who have incurred a job-related injury/disease and have an active claim file with the Office of Workers' Compensation Programs (OWCP).

CATEGORIES OF RECORDS IN THE SYSTEM:

Records in the system include the OWCP quarterly injury/disease chargeback reports, weekly Case Management File (CMF) Reports, weekly Automated Compensation Payment System (ACPS) Reports, weekly Bill Payment System (BPS) Reports, data on VA's continuation of pay (COP) costs, and some elements from the Personnel and Accounting Integrated Data System-VA. The computer data base records include the claimant's name, address, Social Security number, date of birth, grade, salary, telephone number, OWCP's case adjudication status (approved or denied, waiting adjudication, file sent to Hearings and Review for decision), accepted medical condition(s), compensation paid (amount and time period covered), medical bills paid (name of physician, hospital or health facility, type of treatment, date of treatment, amount paid, amount paid

for medical equipment, and rehabilitation expenses), COP authorized or denied, dates COP is paid, number of days of COP, and total amount paid.

AUTHORITY FOR MAINTENANCE OF THE SYSTEM:

Pub. L. 91–596, 5 U.S.C. 8101 *et seq.* and Federal Regulations 20 CFR part 10,29 CFR part 1960, and 5 CFR ch. 1, part 353.

PURPOSE(S):

The information contained in this system of records is used to case manage each worker's compensation claim, to produce statistical management reports, monitor the case management performance of each VA employing facility, and produce statistical reports on the source and type of injuries occurring at each facility.

ROUTINE USES OF RECORDS MAINTAINED IN THE SYSTEM, INCLUDING CATEGORIES OF USERS AND THE PURPOSES OF SUCH USES:

1. Disclosure may be made to any third-party or representative acting on claimant's behalf until the claim is adjudicated, all appeal rights are resolved, and the case file is closed.

2. In the event that records in this system of records indicate a violation or potential violation of law, whether civil, criminal or regulatory in nature, and whether arising by general statute or particular program statute, or by regulation, rule or order issued pursuant thereto, the relevant records may be referred, as a routine use, to the appropriate agency, whether Federal, State, local or foreign, charged with the responsibility for investigating or prosecuting such violation or charged with enforcing or implementing the statute, or rule, regulation or order issued pursuant thereto.

3. Disclosure may be made to a Congressional office from the record of an individual in response to an inquiry from the Congressional office made at the request of that individual.

4. Disclosure may be made to the National Archives and Records Administration in records management inspections conducted under authority of 44 U.S.C. 2904 and 2906.

5. Disclosure may be made to any source from which additional information is needed in order to properly make case management decisions.

6. Disclosure of statistical data may be made to other VA facilities and federal agencies.

POLICIES AND PRACTICES FOR STORING, RETRIEVING, ACCESSING, RETAINING, AND DISPOSING OF RECORDS IN THE SYSTEM:

STORAGE:

Paper documents and computer storage media.

RETRIEVABILITY:

Information is retrievable by the name of VA claimant, Social Security number, and OWCP case file number.

SAFEGUARDS:

Access to the WC/OSH–MIS database is restricted to OWCP Case Managers and Safety Officials. Paper records are maintained in a secured area with limited access. Access to data is by means of on-line (query) database or downloading with a personal computer and is restricted to authorized employees by means of unique user identification and passwords.

RETENTION AND DISPOSAL:

Records are destroyed 30 years after OWCP closes the claimant's case file. Records are destroyed by shredding or burning paper documents, or by erasing the magnetic media.

SYSTEM MANAGER(S) AND ADDRESS:

Deputy Assistant Secretary for Administration (03), 810 Vermont Ave., NW., Washington, DC 20420.

NOTIFICATION PROCEDURES:

Employees desiring to know whether this system of records contains a record pertaining to them must submit a written request to VA's Human Resources Management Office of employment or to the office of last employment for former employees.

RECORD ACCESS PROCEDURES:

Employees seeking information regarding access to and contesting of VA records may write, call, or visit VA's Human Resources Management Office of employment.

CONTESTING RECORD PROCEDURES:

See record access procedures above.

RECORDS SOURCE CATEGORIES:

Data tapes furnished by OWCP, data elements from the Personnel and Accounting Integrated Data System-VA, VA COP data, and VA employees.

[FR Doc. 00–23569 Filed 9–13–00; 8:45 am]

BILLING CODE 8320–01–M

Federal Register

Thursday,
September 14, 2000

Part II

Environmental Protection Agency

40 CFR Part 148 et al.

Hazardous Waste Management System; Identification and Listing of Hazardous Waste: Inorganic Chemical Manufacturing Wastes; Land Disposal Restrictions for Newly Identified Wastes; and CERCLA Hazardous Substance Designation and Reportable Quantities; Proposed Rule

ENVIRONMENTAL PROTECTION AGENCY

40 CFR Parts 148, 261, 268, 271, and 302

[SWH–FRL–6864–5]

RIN 2050–AE49

Hazardous Waste Management System; Identification and Listing of Hazardous Waste: Inorganic Chemical Manufacturing Wastes; Land Disposal Restrictions for Newly Identified Wastes; and CERCLA Hazardous Substance Designation and Reportable Quantities

AGENCY: Environmental Protection Agency.

ACTION: Proposed rule.

SUMMARY: The Environmental Protection Agency (EPA) proposes to amend the regulations for hazardous waste management under the Resource Conservation and Recovery Act (RCRA) by listing as hazardous three wastes generated from inorganic chemical manufacturing processes. We also propose not to list as hazardous various other process wastes. This action proposes to add the toxic constituents found in the wastes to the list of constituents that serves as the basis for classifying wastes as hazardous, and to establish treatment standards for the wastes.

The effect of this proposed regulation would be to subject the wastes to stringent management and treatment standards under Subtitle C of RCRA. Additionally, this action proposes to designate the wastes proposed for listing as hazardous substances subject to the Comprehensive Environmental Response, Compensation, and Liability Act (CERCLA) and to adjust the one-pound statutory reportable quantities (RQs) for some of these substances.

DATES: EPA will accept public comments on this proposed rule until November 13, 2000. Comments postmarked after this date will be marked ''late'' and may not be considered. Any person may request a public hearing on this proposal by filing a request with Mr. David Bussard by September 28, 2000.

ADDRESSES: If you wish to comment on this proposed rule, you must send an original and two copies of the comments referencing docket number F–2000–ICMP–FFFFF to: RCRA Information Center, Office of Solid Waste (5305G), U.S. Environmental Protection Agency Headquarters, 1200 Pennsylvania Avenue, NW, Washington, D.C. 20460. Hand deliveries of comments should be made to RCRA Information Center, Crystal Gateway I, First Floor, 1235 Jefferson Davis Highway, Arlington, VA.

You also may submit comments electronically by sending electronic mail through the Internet to: *rcradocket@epamail.epa.gov.* You should identify comments in electronic format with the docket number F–2000–ICMP–FFFFF. You must submit all electronic comments as an ASCII (text) file, avoiding the use of special characters and any form of encryption.

Address requests for a hearing to Mr. David Bussard at: Office of Solid Waste, Hazardous Waste Identification Division (5304W), U.S. Environmental Protection Agency, 1200 Pennsylvania Avenue, NW, Washington, D.C. 20460, (703) 308–8880.

FOR FURTHER INFORMATION CONTACT: For general information, contact the RCRA/Superfund Hotline at (800) 424–9346 or TDD (800) 553–7672 (hearing impaired). In the Washington, D.C., metropolitan area, call (703) 920–9810 or TDD (703) 412–3323. For specific aspects of the rule, contact Ms. Gwen DiPietro, Office of Solid Waste (5304W), U.S. Environmental Protection Agency, 1200 Pennsylvania Avenue, NW, Washington, D.C., 20460. [E-mail addressee and telephone number: *dipietro.gwen@epa.gov* (703–308–8285).] For technical information on the CERCLA aspects of this rule, contact Ms. Lynn Beasley, Office of Emergency and Remedial Response, Analytical Operations and Data Quality Center (5204G), U.S. Environmental Protection Agency, 1200 Pennsylvania Avenue, NW, Washington, D.C. 20460, [E-mail address and telephone number: *beasley.lynn@epa.gov* (703–603–9086).]

SUPPLEMENTARY INFORMATION: If you do not submit comments electronically, we ask you to voluntarily submit one additional copy of your comments on labeled personal computer diskettes in ASCII (text) format or a word processing format that can be converted to ASCII (text). It is essential to specify on the disk label the word processing software and version/edition as well as your name. This will allow us to convert the comments into one of the word processing formats we utilize. Please use mailing envelopes designed to physically protect the submitted diskettes. We emphasize that submission of comments on diskettes is not mandatory nor will it result in any advantage or disadvantage to any commenter.

You should not submit electronically any confidential business information (CBI). You must submit an original and two copies of CBI under separate cover to: RCRA CBI Document Control Officer, Office of Solid Waste (5305W), U.S. EPA, 1200 Pennsylvania Avenue, NW, Washington, D.C. 20460. Any CBI data should be specifically and clearly marked. In addition, please submit a non-CBI version of your comments for inclusion in the public record.

Supporting documents in the docket for this proposal are also available in electronic format on the Internet: <*http://www.epa.gov/epaoswer/hazwaste/id/inorchem/pr2000.htm*>.

We will keep the official record for this action in paper form. Accordingly, we will transfer all comments received electronically into paper form and place them in the official record, which also will include all comments submitted directly in writing. The official record is the paper record maintained at the RCRA Information Center, also referred to as the Docket.

Our responses to comments, whether the comments are written or electronic, will be in a notice in the **Federal Register** or in a response to comments document placed in the official record for this rulemaking. We will not immediately reply to commenters electronically other than to seek clarification of electronic comments that may be corrupted in transmission or during conversion to paper form, as discussed above.

You may view public comments and supporting materials in the RCRA Information Center (RIC), located at Crystal Gateway I, First Floor, 1235 Jefferson Davis Highway, Arlington, VA. The RIC is open from 9 a.m. to 4 p.m., Monday through Friday, excluding federal holidays. To review docket materials, we recommend that you make an appointment by calling 703–603–9230. You may copy a maximum of 100 pages from any regulatory docket at no charge. Additional copies cost $0.15/page.

Customer Service

How Can I Influence EPA's Thinking on This Proposed Rule?

In developing this proposal, we tried to address the concerns of all our stakeholders. Your comments will help us improve this rule. We invite you to provide your comments on all data, assumptions and methodologies used to support our proposal, your views on options we have proposed, your ideas on new approaches we have not considered, any new data you may have, your views on how this rule may affect you, and other relevant information. Your comments must be submitted by the deadline in this proposal. Your

comments will be most effective if you follow the suggestions below:

- Explain your views as clearly as possible and provide a summary of the reasoning you used to arrive at your conclusions. Provide examples to illustrate your views wherever possible.
- Provide solid technical data to support your views.
- If you estimate potential costs, explain how you arrived at your estimate.
- Tell us which parts of this proposal you support, as well as which parts you disagree with.
- Offer specific alternatives.
- Reference your comments to specific sections of the proposal by using section titles or page numbers of the preamble or the regulatory citations.
- Clearly label any CBI submitted as part of your comments.
- Include your name, date, and docket number with your comments.

Contents of This Proposed Rule

I. Overview
A. Who Potentially Will be Affected by this Proposed Rule?
B. Why Does this Rule Read Differently from Other Listing Rules?
C. What are the Statutory Authorities for this Proposed Rule?
II. Background
A. How Does EPA Define a Hazardous Waste?
B. How Does EPA Regulate RCRA Hazardous Wastes?
C. What is the Consent Decree Schedule for and Scope of this Proposal?
III. Approach Used in this Proposed Listing
A. Summary of Today's Action
B. What Wastes Associated with the 14 Sectors Are Outside the Scope of the Consent Decree?
1. Mineral processing wastes exempt under the ''Bevill'' exemptions
2. Residuals used or reused in different industrial processes
3. Debris and other nonprocess wastes
C. What Information Did EPA Collect and Use?
1. The RCRA Section 3007 Survey
2. Field work: site visits, sampling and analysis
3. Other sources
D. How Did EPA Evaluate Wastes for Listing Determinations?
1. Listing policy
2. Characteristic hazardous waste
3. Evaluations of particular units and pathways of release
4. Evaluation of Secondary Materials
E. Description of Risk Assessment Approaches
1. What risk thresholds were used?
2. What leaching procedures were used?
3. How were wastes screened to determine if further assessment was needed?
4. How was the groundwater pathway evaluated?
5. How was the surface water pathway evaluated?
6. What are the limitations and uncertainties of the assessment?
F. Sector-specific Listing Determination Rationales
1. Antimony oxide
2. Barium carbonate
3. Boric acid
4. Cadmium pigments
5. Inorganic hydrogen cyanide
6. Phenyl mercuric acetate
7. Phosphoric acid from the dry process
8. Phosphorus pentasulfide
9. Phosphorus trichloride
10. Potassium dichromate
11. Sodium chlorate
12. Sodium dichromate
13. Sodium phosphate from wet process phosphoric acid
14. Titanium dioxide
G. What is the Status of Landfill Leachate from Previously Disposed Wastes?
IV. Proposed Treatment Standards Under RCRA's Land Disposal Restrictions
A. What are EPA's Land Disposal Restrictions (LDRs)?
B. What are the treatment standards for K176 (baghouse filters from production of antimony oxide)
C. What standards are the treatment standards for K177 (slag from the production of antimony oxide that is disposed of or speculatively accumulated)?
D. What are the treatment standards for K178 (nonwastewaters from the production of titanium dioxide by the chloride-ilmenite process)?
E. What Other LDR Provisions Are Proposed to Apply?
1. Debris
2. Soil
3. Underground Injection Wells that can be found in the administrative record for this rule
F. Is There Treatment Capacity for the Proposed Wastes?
1. What Is a Capacity Determination?
2. What are the Capacity Analysis Results?
V. Compliance Dates
A. Notification
B. Interim Status and Permitted Facilities
VI. State Authority
A. Applicability of Rule in Authorized States
B. Effect on State Authorizations
VII. Designation of Inorganic Chemical Wastes under the Comprehensive Environmental Response, Compensation, and Liability Act (CERCLA)
A. Reporting Requirements
B. Basis for Proposed RQ Adjustment
VIII. Administrative Assessments
A. Executive Order 12866
1. Methodology Section
2. Results
B. Regulatory Flexibility Act (RFA), as amended by the Small Business Regulatory Enforcement Fairness Act of 1996 (SBREFA), 5 U.S.C. 601 *et seq.*
C. Paperwork Reduction Act
D. Unfunded Mandates Reform Act
E. Executive Order 12898: Environmental Justice
F. Executive Order 13045 : Protection of Children From Environmental Health Risks and Safety Risks
G. Executive Order 13084: Consultation and Coordination With Indian Tribal Governments
H. Executive Order 13132: Federalism
I. National Technology Transfer and Advancement Act

I. Overview

A. Who Potentially Will Be Affected by This Proposed Rule?

Beginning January 1, 1999 all documents related to EPA's regulatory, compliance and enforcement activities, including rules, policies, interpretive guidance, and site-specific determinations with broad application, should properly identify the regulated entities, including descriptions that correspond to the applicable SIC codes or NAICS codes (source: October 9, 1998 USEPA memo from Peter D. Robertson, Acting Deputy Administrator of USEPA). Today's action, if finalized, could potentially affect those who handle the wastes that we are proposing to add to EPA's list of hazardous wastes under the RCRA program. This action also may affect entities that may need to respond to releases of these wastes as CERCLA hazardous substances. These potentially-affected entities are described in the Economics Background Document placed in the docket in support of today's proposed rule. A summary is shown in the table below.

SUMMARY OF FACILITIES POTENTIALLY AFFECTED BY THE USEPA'S 2000 INORGANIC CHEMICAL MANUFACTURING WASTE LISTING PROPOSAL

Item	SIC code	Industry sector name	Number of U.S. relevant inorganic mfg. facilities
1	2816	Inorganic Pigments	3
1	2819	Industrial Inorganic Chemicals, not elsewhere classified	3

The list of potentially affected entities in the above table may not be exhaustive. Our aim is to provide a guide for readers regarding entities likely to be regulated by this action. This table lists those entities that we are aware potentially could be affected by this action. However, this action may affect other entities not listed in the table. To determine whether your facility is regulated by this action, you should examine 40 CFR Parts 260 and 261 carefully in concert with the proposed rules amending RCRA that are found at the end of this **Federal Register** document. If you have questions regarding the applicability of this action to a particular entity, consult the person listed in the preceding section entitled **FOR FURTHER INFORMATION CONTACT.**

B. Why Does This Rule Read Differently From Other Listing Rules?

Today's proposed listing determination preamble and regulations are written in ''readable regulations'' format. The authors tried to use active rather than passive voice, plain language, a question-and-answer format, the pronouns ''we'' for EPA and ''you'' for the owner/generator, and other techniques to make the information in today's rule easier to read and understand. This new format is part of our efforts toward regulatory re-invention, and it makes today's rule read differently from other listing rules. We believe that this new format will help readers understand the regulations, which should then increase compliance, make enforcement easier, and foster better relationships between EPA and the regulated community.

C. What Are the Statutory Authorities for This Proposed Rule?

These regulations are proposed under the authority of Sections 2002(a), 3001(b), 3001(e)(2), 3004(d)–(m) and 3007(a) of the Solid Waste Disposal Act, 42 U.S.C. 6912(a), 6921(b) and (e)(2), 6924(d)–(m)and 6927(a), as amended several times, most importantly by the Hazardous and Solid Waste Amendments of 1984 (HSWA). These statutes commonly are referred to as the Resource Conservation and Recovery Act (RCRA), and are codified at Volume 42 of the United States Code (U.S.C.), Sections 6901 to 6992(k) (42 U.S.C. 6901–6992(k)).

Section 102(a) of the Comprehensive Environmental Response, Compensation, and Liability Act of 1980 (CERCLA), 42 U.S.C. 9602(a) is the authority under which the CERCLA aspects of this rule are proposed.

II. Background

A. How Does EPA Define a Hazardous Waste?

Section 3001 of RCRA and EPA's regulations establish two ways of identifying wastes as hazardous under RCRA. A waste may be hazardous either if it exhibits certain properties (called ''characteristics'') which pose threats to human health and the environment, or if it is included on a specific list of wastes EPA has evaluated and found to pose unacceptable risks. EPA's regulations in the Code of Federal Regulations (CFR) define four hazardous characteristics: ignitability, corrosivity, reactivity, or toxicity. (See 40 CFR 261.21 through 261.24.) As a generator, you must determine whether or not a waste exhibits any of these characteristics by testing the material or by using your knowledge of the process that produced the waste. (See 40 CFR 262.11(c).)

EPA may also conduct a more specific assessment of a waste or category of wastes and ''list'' them if they meet criteria set out in 40 CFR 261.11. As described in 40 CFR 261.11, we may list a waste as hazardous if it:

—Exhibits any of the characteristics noted above , *i.e.,* ignitability, corrosivity, reactivity, or toxicity (261.11(a)(1));

—Is ''acutely'' hazardous, *i.e.,* if they are fatal to humans or in animal studies at low doses, or otherwise capable of causing or significantly contributing to an increase in serious illness (261.11(a)(2)); or

—Is capable of posing a substantial present or potential hazard to human health or the environment when improperly managed (261.11(a)(3)).

Under the third criterion at 40 CFR 261.11(a)(3), we may decide to list a waste as hazardous (1) if it contains hazardous constituents identified in Appendix VIII to 40 CFR Part 261, and (2) if, after considering the factors noted in this section of the regulations, we ''conclude that the waste is capable of posing a substantial present or potential hazard to human health or the environment when improperly treated, stored, transported, or disposed of, or otherwise managed.'' We place a chemical on the list of hazardous constituents on Appendix VIII only if scientific studies have shown a chemical has toxic effects on humans or other life forms. When listing a waste, we also add the hazardous constituents that serve as the basis for listing to Appendix VII to part 261.

Residuals from the treatment, storage, or disposal of most listed hazardous wastes are also classified as hazardous wastes based on the ''derived-from'' rule (see 40 CFR 261.3(c)(2)(i)). For example, ash or other residuals from the treatment of a listed waste generally carries the original hazardous waste code and is subject to the hazardous waste regulations. Also, the ''mixture'' rule (see 40 CFR 261.3(a)(2)(iii) and (iv)) provides that, with certain limited exceptions, any mixture of a listed hazardous waste and a solid waste is itself a RCRA hazardous waste.

Some materials that would otherwise be classified as hazardous wastes under the rules described above are excluded from jurisdiction under RCRA if they are recycled in certain ways. The current definition of solid waste at 40 CFR 261.2 excludes secondary materials from the definition of solid waste that are used directly (*i.e.,* without reclamation) as ingredients in manufacturing processes to make new products, used directly as effective substitutes for commercial products, or returned directly to the original process from which they are generated as a substitute for raw material feedstock. (See 40 CFR 261.2(e).) As discussed in the January 4, 1985, rulemaking that promulgated this regulatory framework, these are activities which, as a general matter, resemble ongoing manufacturing operations more than conventional waste management and so are more appropriately classified as not involving solid wastes. (See 50 FR 637–640). Our approach to these issues is described in more detail below in section III.D.4.

B. How Does EPA Regulate RCRA Hazardous Wastes?

Wastes exhibiting any hazardous characteristic or listed as hazardous are subject to federal requirements under RCRA. These regulations affect persons who generate, transport, treat, store or dispose of such waste. Facilities that must meet the hazardous waste management requirements, including the need to obtain permits to operate, commonly are referred to as ''Subtitle C'' facilities. Subtitle C is Congress' original statutory designation for that part of RCRA that directs EPA to issue those regulations for hazardous wastes as may be necessary to protect human health or the environment. EPA standards and procedural regulations implementing Subtitle C are found generally at 40 CFR Parts 260 through 272.

All RCRA hazardous wastes are also hazardous substances under the Comprehensive Environmental Response, Compensation, and Liability Act (CERCLA), as described in section 101(14)(C) of the CERCLA statute. This

applies to wastes listed in 40 CFR 261.31 through 261.33, as well as any wastes that exhibit a RCRA characteristic. Table 302.4 at 40 CFR 302.4 lists CERCLA hazardous substances along with their reportable quantities (RQs). Anyone spilling or releasing a substance at or above the RQ must report this to the National Response Center, as required in CERCLA Section 103. In addition, Section 304 of the Emergency Planning and Community Right-to-Know Act (EPCRA) requires facilities to report the release of a CERCLA hazardous substance at or above its RQ to State and local authorities. Today's rule proposes to establish RQs for some of the newly listed wastes.

C. What Is the Consent Decree Schedule for and Scope of This Proposal?

The 1984 Hazardous and Solid Waste Amendments (HSWA) to RCRA require EPA to make listing determinations for several specified categories of wastes, including ''inorganic chemical industry wastes'' (see RCRA section 3001(e)(2)). In 1989, the Environmental Defense Fund (EDF) filed a lawsuit to enforce the statutory deadlines for listing decisions in RCRA Section 3001(e)(2). (*EDF* v. *Browner;* D.D.C. Civ. No. 89–0598). To resolve most of the issues in the case, EDF and EPA entered into a consent decree, which has been amended several times to revise deadlines for EPA action. Paragraph 1.g (as amended) of the consent decree addresses the inorganic chemical industry:

EPA shall promulgate a final listing determination for inorganic chemical industry wastes on or before October 31, 2001. This listing determination shall be proposed for public comment on or before August 30, 2000. The listing determination shall include the following wastes: sodium dichromate production wastes, wastes from the dry process for manufacturing phosphoric acid, phosphorus trichloride production wastes, phosphorus pentasulfide production wastes, wastes from the production of sodium phosphate from wet process phosphoric acid, sodium chlorate production wastes, antimony oxide production wastes, cadmium pigments production wastes, barium carbonate production wastes, potassium dichromate production wastes, phenyl mercuric acetate production wastes, boric acid production wastes, inorganic hydrogen cyanide production wastes, and titanium dioxide production wastes (except for chloride process waste solids). However, such listing determinations need not include any wastes which are excluded from hazardous waste regulation under section 3001(b)(3)(A)(ii) of RCRA and for which EPA has determined that such regulation is unwarranted pursuant to section 3001(b)(3)(C) of RCRA.

Today's proposal satisfies EPA's duty under paragraph 1.g to propose determinations for inorganic chemical industry wastes.

As described above, the consent decree provides that EPA does not need to make listing determinations for certain wastes that it has exempted from hazardous waste regulations under the ''Bevill amendments'' to RCRA. See the discussion of ''exempt mineral processing'' wastes in section III.B.1 below.

III. Approach Used in This Proposed Listing

A. Summary of Today's Action

Manufacturers of the inorganic chemical products described above identified over 170 categories of residuals generated as part of their production processes. We first determined which of these residuals fell within the scope of our consent decree obligations. We then evaluated the risks posed by each of the remaining categories of residual materials. In some cases we used quantitative or qualitative screening methods. For 18 wastes we conducted full-scale modeling to predict risks.

As a result of this evaluation, we found that three wastes generated in the 14 inorganic chemicals manufacturing operations which we evaluated meet the criteria for listing set out in either 40 CFR 261.11(a)(1) or 261.11(a)(3). We conducted full-scale modeling of two of these wastes and propose to list them under 40 CFR 261.11(a)(3). We found that one waste warranted listing under 40 CFR 261.11(a)(1) because it exhibited hazardous waste characteristics. We did not model this waste. Since these are wastes from specific inorganic chemical industries, we propose to add them to Section 261.32 with K-waste codes. The three wastestreams we propose to list as hazardous, along with their corresponding hazard code and proposed EPA Hazardous Waste Numbers, are: [1]

K176 Baghouse filters from the production of antimony oxide. (E)

K177 Slag from the production of antimony oxide that is disposed of or speculatively accumulated. (T)

K178 Nonwastewaters from the production of titanium dioxide by the chloride-ilmenite process. (This listing does not apply to chloride process waste solids from titanium tetrachloride production exempt under 40 CFR 261.4(b)(7).) (T)

We found that all of the remaining wastes that we evaluated did not meet the criteria for listing in 40 CFR 261.11, and we are proposing not to list them as hazardous wastes. More information on our evaluations of particular wastes is set out in the background documents and the sector-specific discussions in section III.F of this preamble.

We have previously listed as hazardous a number of wastes in 40 CFR 261.32 from other inorganic chemicals industries, including wastes from the production of inorganic pigments (codes K002 through K008), and wastes from chlorine production (codes K071, K073, and K106). Today's proposal does not affect the scope of any existing hazardous waste listing, and we are not soliciting comments on those existing listing determinations.

We are also proposing other changes to the RCRA regulations as a result of the proposed listings. These changes include adding constituents to Appendices VII and VIII for Part 261, and setting new land disposal restrictions. We are proposing to add the following constituents to Appendix VII that serve as the basis for listing: K176—arsenic and lead, K177—antimony, and K178—manganese and thallium. We are also proposing to add manganese to the list of hazardous constituents in Appendix VIII, based on scientific studies that demonstrate manganese has toxic effects on humans and other life forms. Section IV of today's proposal describes the proposed changes to the land disposal restrictions, which would establish treatment standards for specific constituents in the wastes proposed for listing.

Also as a result of the proposed listings, these wastes would become hazardous substances under CERCLA. Therefore, in today's rule we are proposing to designate these wastestreams as CERCLA hazardous substances, and to adjust the one-pound statutory RQs for two of these wastestreams; this is described in section VII of today's proposal.

B. What Wastes Associated With the 14 Sectors Are Outside the Scope of the Consent Decree?

Determining the scope of our consent decree obligations was more complicated than usual for two reasons. First, Paragraph 1.g (quoted above in II.C) does not tell EPA which wastestreams it must evaluate. For most other listing obligations set out in the consent decree, the decree specifies particular wastestreams which EPA must evaluate for listing. See, for

[1] As required in 40 CFR 262.30, the listing description includes the hazard code. Wastes listed under 40 CFR 261.11(a)(1) due to the toxicity characteristic are designated ''E,'' and wastes listed under 40 CFR 261.11(a)(3) for toxicity are designated ''T''.

example, paragraph 1.k identifying 14 specific petroleum wastestreams.[2] Second, paragraph 1.g contains an exemption for wastes found to be exempt from hazardous waste regulation in previous EPA actions implementing the so-called ''Bevill exemptions'' for mineral processing wastes. Thus, we needed to conduct some analysis to determine the scope of our obligations.

We began by asking facilities to identify all of the residuals generated by their production processes. We then reviewed their lists. We found that some residuals were actually exempt ''Bevill'' wastes that we need not address. We found that other wastes were really associated with the manufacture of other materials. Also, we concluded that a few residuals were not ''production'' wastes and therefore were not covered by the decree. With the exceptions discussed below in our evaluation of the sodium dichromate and titanium dioxide sectors, we chose not to evaluate any of the wastes that we considered to be outside the scope of the decree. We concluded that evaluation was not possible under the time frame set out in the decree. In the following sections we provide an overview of the types of wastes that we consider outside the scope.

1. Mineral Processing Wastes Exempt Under the ''Bevill'' Exemptions

Many of the inorganic chemical manufacturing processes we address in this rule use ores and minerals as feedstocks. Some wastes derived from the processing of ores and minerals are exempt from regulation as RCRA hazardous wastes under decisions EPA made under statutory requirements known as the ''Bevill'' amendments. RCRA Sections 3001(b)(3) and 8002(p) required EPA to determine whether wastes from the extraction, beneficiation or processing of ores and minerals warranted regulation as hazardous wastes under Subtitle C of RCRA. Between 1989 and 1991 EPA completed a series of rules and studies establishing which mining wastes fit within the ''extraction,'' ''beneficiation,'' or ''processing'' definitions, and which of the wastes within each category were exempt from regulation as hazardous wastes. EPA concluded that all wastes produced during extraction and beneficiation are entitled to an exemption. EPA found that 20 categories of wastes from subsequent ''mineral processing'' operations met the ''high volume/low toxicity'' criteria and were exempt as well. See 54 FR 36592 (Sept. 1, 1989), 55 FR 2322 (Jan. 23, 1990), the July 31, 1990 Report to Congress on Wastes from Mineral Processing, and 56 FR 27300 (June 13, 1991).

EPA codified these ''Bevill'' exemptions at 40 CFR 261.4 (b)(7). EPA discussed some of these exemptions further in a 1998 final rule promulgating treatment standards for non-exempt mineral processing wastes that exhibit the toxicity characteristic. See the Land Disposal Restrictions Phase IV Final Rule at 63 FR 28598 (May 26, 1998).

Paragraph 1.g of the consent decree provides that EPA need not make listing determinations for wastes from any of the 14 inorganic chemical manufacturing processes which are ''excluded from hazardous waste regulation under Section 3001(b)(3)(A)(ii) of RCRA and for which it has determined that such regulation is unwarranted pursuant to Section 3001(b)(3)(C) of RCRA.'' In other words, the consent decree does not require us to make listing determinations for wastes which we exempted under the statute's ''Bevill'' provisions.

Paragraph 1.g. of the consent decree requires EPA to make a listing determination for ''* * * titanium dioxide production wastes (except for chloride process waste solids).'' EPA interprets the exception to refer to the chloride process waste solids from the production of titanium tetrachloride which are exempt under the Bevill rule, rather than all solids from the chloride process. Solids generated after titanium tetrachloride forms fall within the scope of the consent decree.

We reviewed the generators' lists of process residuals to determine whether they had included any Bevill exempt wastes which we need not assess. (In some cases, the generators had claimed that certain wastes were exempt under EPA's Bevill decisions.) This process was not always simple. We found it was sometimes difficult to determine whether a particular facility's waste fit within one of the exempt categories. For example, the mineral processing exemption for titanium dioxide covers only solid materials from an initial step in the production process. It was not always easy to tell whether particular waste solids were generated from the portion of the process that would make them exempt, or from later production steps. Sector-specific information regarding our conclusions appears in section III.F of this preamble for those sectors where we found this exemption had some relevance. We found that facilities in only three of the consent decree sectors generate Bevill exempt wastes: Boric acid, sodium dichromate, and titanium dioxide.

In other sectors, the facilities produce inorganic product chemicals from a mineral product. Under the Bevill exemption (54 FR 36620–21), chemical manufacturing begins if there is any further processing of a saleable mineral product. Since these facilities use saleable mineral products as feedstock, their processes are chemical manufacturing, and may not be classified as mineral processing. Therefore, none of the wastestreams generated by these facilities in the production of the other inorganic chemicals are Bevill exempt.

We emphasize that we are not re-opening any Bevill decisions made in earlier actions regarding the exemptions. We are not re-defining the boundaries between ''extraction'' and ''beneficiation,'' between ''beneficiation'' and ''mineral processing,'' or between ''mineral processing'' and non-exempt chemical manufacturing. Nor are we revisiting our decision that all wastes uniquely associated with the extraction and beneficiation of ores and minerals are exempt. Similarly, we are not re-opening any of our earlier decisions as to which categories of mineral processing wastes are exempt. Rather, we are determining whether particular wastestreams fall within any of the exempt categories. We are not requesting comment on, and do not intend to respond to comments relating to the earlier decisions.

We also found that some inorganic chemical processes generate composite wastestreams that contain both a Bevill exempt waste and one or more non-exempt wastes. We evaluated the non-exempt portions of such wastes to fulfill our consent decree requirements. We apportioned risks between the exempt and nonexempt portion of such commingled wastes, and made listing determinations for the non-exempt portions. We did not, however, assess the exempt portions of such streams. This assessment, therefore, does not re-open any earlier decision regarding exemptions for the ''Bevill'' component of the commingled streams.

2. Residuals Used or Reused in Different Industrial Processes

In some cases, facilities within the 14 inorganic chemicals sectors set out in the consent decree produce residuals that are used or reused in processes that are not among those listed in the decree. Those industries in turn produced residuals derived from the materials generated in the consent decree industries. We evaluated the

[2] The revised consent decree is available in the docket for today's proposal.

management of the original industry's material up to the point that the second industry inserts it into its production process. However, we generally considered the second production process and its associated wastes to be beyond the scope of the consent decree. We did not evaluate for listing purposes wastes generated from these non-consent decree industries. For example, in the titanium dioxide sector, one facility uses a residual from the production of titanium dioxide as an ingredient to make salt. We considered salt-making to be a separate production process outside the scope of the consent decree. We are not proposing any listing determinations for wastes generated in the salt plant.

However, in some cases, the reuse of the residual from a consent decree process involved an activity which we always regulate as waste management. In this situation, we considered the reuse to be waste management, and the waste to be within the scope of the consent decree. Consequently, we evaluated the residual for listing. For example, we found that one of the facilities which produces boric acid generates a waste which is used as a fuel. Under our recycling regulations, we regulate burning for energy recovery and so, we evaluated this waste. See 40 CFR 261.2(c)(2). We found that the waste is already being managed in a RCRA Subtitle C unit and decided not to list the waste. Others examples of reuse that we evaluated include land application of biological treatment solids from hydrogen cyanide production as a fertilizer or soil amendment, and land application of gypsum from the titanium dioxide sector. In two cases, however, we decided to make listing decisions for residuals generated during the production of non-consent decree products. In the titanium dioxide sector, the residuals are commingled with other wastes clearly within the scope of the decree. See the discussions of the sodium dichromate sector and the titanium dioxide sector in section III.F. In the sodium dichromate sector, residuals from the non-consent decree process are piped back to the consent decree process, making it difficult to determine whether the two processes are really separate.

3. Debris and Other Nonprocess Wastes

Some generators also identified debris and structural components of their production plants as intermittently-generated wastes. We concluded that these materials do not fall within the scope of the decree. Most of the wastes that fell in this category were refractory bricks which become wastes when facilities remove them to refurbish their furnaces. We consider this material to be a structural component of the plant where production takes place rather than a waste from the ''production'' of an inorganic chemical. Similarly, we consider a few analogous types of plant debris to fall outside the scope of the decree. This debris includes miscellaneous construction materials, insulation, reactor bed material, and piping. These wastes were reported for the following inorganic sectors: Phosphoric acid, barium carbonate, sodium dichromate, hydrogen cyanide, antimony oxide, sodium phosphate, and titanium dioxide.

We have never interpreted the decree to require us to consider listing tanks, pads, or other structural components housing production processes when they become wastes by being removed from use. Other paragraphs of the decree support this position. Paragraphs 1.c. (coke byproducts) and 1.k. (petroleum refining wastes) cover production processes involving reaction vessels lined with refractory or similar materials, and in neither case did the decree include wastes related to the reaction vessels themselves or related materials. Nor do any other provisions in the decree direct us to list any other type of structural components. We note that discarded refractory bricks and other debris would be regulated as hazardous wastes, if these materials were contaminated with a listed waste (including wastes listed as a result of today's rulemaking), or if they exhibited a hazardous waste characteristic.

A few facilities also reported environmental media (excavated soils or recovered groundwater) contaminated with process residuals as wastes from their production processes. We consider such contaminated media to be outside the scope of today's listing determinations, because these are not wastes generated during production processes, but rather wastes generated due to construction or remedial action. We note that none of the other consent decree provisions require us to evaluate contaminated media. See the specific listing background documents for the different sectors for a full listing of the wastes we considered to be out of scope of the decree.

C. What Information Did EPA Collect and Use?

Our investigation of the wastes generated by the inorganic chemicals manufacturing industry included two major information collection efforts: A survey of the industries and field investigations. The survey effort included the development, distribution, and assessment of an extensive questionnaire sent under the authority of RCRA section 3007 to all known facilities engaged in any of the 14 inorganic chemical manufacturing processes. During our field investigations we made site visits to familiarize ourselves with processes and residuals, and made additional visits to collect samples of residuals which we sent to laboratories for analysis. Finally, we collected data from other sources to help characterize the settings in which some of the wastes are managed. Each of these efforts is summarized below.

1. The RCRA Section 3007 Survey

We developed an extensive questionnaire under the authority of Section 3007 of RCRA for distribution to the inorganic chemicals manufacturing industry. The purpose of the survey was to gather information about solid and hazardous waste generation and management practices in the U.S. for the fourteen inorganic chemical industry sectors. The questionnaire collected information about the inorganic chemical products manufactured, the processes used, the wastes generated, the wastes characteristics, and how the wastes were managed. The questionnaire is included in the ''General Background Document for the Inorganic Chemical Listing Determination.'' which is in the docket for today's proposal. This document also provides more details on the producers identified in the inorganic sectors.

We distributed the survey in March of 1999 to all 124 facilities that we had identified as potential manufacturers of chemicals in the 14 targeted sectors. We developed the list of facilities from a review of the available literature, which included directories of chemical producers, reference works of chemical technology, chemical profile information, and previous work by EPA on these industries. From the surveys distributed, 57 facilities indicated that they manufacture chemicals from at least one of the 14 sectors. The other facilities notified us that they had either stopped operations or did not manufacture inorganic chemical products. From the survey, we confirmed that one product was no longer manufactured in this country (phenyl mercuric acetate).

We also conducted an exhaustive engineering review of the submitted surveys for accuracy and completeness. We conducted quality assurance reviews of the data to identify any inappropriate entries and missing data. The engineering review of each facility's

response resulted in follow-up letters and/or telephone calls to the facilities seeking clarifications, corrections, and additional data where needed.

Where we conducted sampling and analysis of the waste, we used this analytical data in our analysis (see the following section). Facilities also submitted data in their survey on the composition of some of their wastes. In the absence of our own analytical data, we used data provided by facilities in our evaluation. These cases are noted in the sector-specific discussions in section III.F. In some cases, these data consisted of results from testing to determine whether the wastes exhibited characteristics. We thought such data were reliable because of the consequences the facilities would face if their characteristic data were not accurate. In addition, survey respondents were required to certify the accuracy of their submittal.

2. Field Work: Site Visits, Sampling and Analysis

As part of our field work, we visited production facilities (engineering site visits), we took preliminary samples (familiarization sampling), and we obtained samples to fully characterize the waste for constituents of concern (record sampling). We initiated the sampling phase of this listing determination with the development of a Quality Assurance Project Plan (QAPP) for sampling and analysis. The QAPP describes the quality assurance and quality control requirements for the data collection. We also developed sampling and analysis plans (SAPs) for sampling at individual facilities. The QAPP and the SAPs are available in the public docket for this proposal.

The primary purpose of the engineering site visits was to gain first hand knowledge of the manufacturing processes, the waste generation and management, and to identify potential locations for waste sampling. We conducted site visits at 25 facilities in 12 of the sectors. We selected the facilities to visit based on logistics and to visit sites that represent the variety of process and wastes generated within industry sectors. Site visit reports are available in the docket for today's rule. During some of the engineering site visits, we collected 22 familiarization samples to help us identify potential sampling or analytical problems for the wastes of interest. For example, we used the familiarization samples to assess the effectiveness of the analytical methods that we planned to use during record sampling for a number of the targeted waste matrices.

During record sampling, we collected 69 waste samples from 13 different facilities. Additional samples were collected for QA/QC purposes. Largely due to the time constraints imposed by our consent decree schedule, we focused the sampling effort on the wastes that we most expected to present significant potential risks. Based on information obtained from the RCRA Section 3007 Surveys, we established sampling priorities by considering the reported management practices (e.g., wastes going to Subtitle D landfills and impoundments were of concern), and the likely presence of contaminants of concern.

We also found that we were able to make listing decisions on a variety of reported wastes without conducting sampling. In some cases, we were able to use information about the processes and the raw materials to conclude that a waste was not likely to present a significant risk. Also, we did not typically sample wastes that were reported to be characteristically hazardous waste and were already regulated as hazardous under RCRA. We felt that, for these wastes, we could make listing decisions without further information on waste constituents. In addition, we did not attempt to sample wastes that we found to be outside the scope of the consent decree, as described in Section III.B. Thus, for example, we did not sample a number of wastes that appeared to be exempt under the Bevill regulations.

We believe that the 69 record samples from 13 sites provide an adequate characterization of the wastes that we sampled. The 13 sites represent approximately 30% of the 42 identified production facilities within the specific sectors we chose for sampling. The wastes sampled also represent the major waste types of concern, e.g., specific process wastes/sludges, wastewater treatment sludges, wastewaters, and spent filter material. Section III.F of this proposal provides information on the specific wastes sampled in each sector. The docket for today's proposal also contains background documents for the specific sectors, which give details on which wastes we sampled and our evaluation of the need for sampling or modeling certain wastes.

For most sectors, we focused our analyses on metal constituents, because these are the constituents expected from the inorganic processes under evaluation. We analyzed for other constituents in those cases where we expected they might be present in the waste, or if other constituents showed up in the familiarization sampling. Thus, we analyzed wastes from the inorganic hydrogen cyanide industry for cyanide and volatile organics because of their potential to be present from the process. Similarly, in the titanium dioxide sector, we analyzed waste samples for semivolatile and chlorinated organics due to the use of coke and chlorine as raw materials in the production process for the titanium chloride intermediate. The overall list of target analytes are in the QAPP, which is in the docket for today's rule. The docket also contains the background documents for each sector and the corresponding waste characterization data reports, which show the chemical analyses performed and the analytes found in the waste samples.

In our analyses of wastes samples, we performed analyses to measure constituent concentrations in the wastes themselves (''total'' analysis), as well as analyses for constituents that leach out of the wastes. We generally used the methods specified in OSW's methods manual (''Test Methods for Evaluating Solid Waste, Physical/Chemical Methods,'' SW–846), as described in the QAPP, the SAPs, and the background documents for the specific sectors. We used two extraction methods to measure leaching, the Toxicity Characteristic Leaching Procedure (TCLP, SW–846 method 1311), and the Synthetic Precipitation Leaching Procedure (SPLP, SW–846 method 1312).

In general, we were able to measure the concentrations of constituents in waste samples at very low detection levels. However, for some constituents in some matrices the SPLP and/or TCLP analyses provided detection limits that were somewhat above health-based levels of concern. In such cases, we examined all of the analytical data to determine if the undetected constituent might possibly present a potential risk. Where we did not detect the constituent in the total analysis (*i.e.,* the analysis of a sample prior to any leaching), we assumed that the constituent was not present in the leachate. However, if the totals analysis showed the presence of a constituent that we did not detect in the leachate, then we assessed the risk that would be posed if the constituent were present at a concentration equal to one-half the detection limit. Section III.F shows the cases where we used this assumption in our evaluation of wastes for the different inorganic sectors, and further details are available in the background documents for each sector.

3. Other Sources

We also collected data from a variety of other sources to help characterize the settings in which these wastes are managed. For example, we contacted

several state and local authorities to collect information regarding the location of drinking water wells. We also obtained information and, in some cases analytical data, from state authorities and other sources to help in our evaluations. We note these sources in the sector-specific discussions in Section III.F when we relied on such data.

D. How Did EPA Evaluate Wastes for Listing Determinations?

1. Listing Policy

As discussed in section II.A. of this preamble, we consider the listing criteria set out in 40 CFR 261.11, in light of all the information we have relevant to the criteria, in making listing determinations. For decisions made under 40 CFR 261.11(a)(3), today's proposed listing determinations follow the elements of the EPA's hazardous waste listing policy presented the proposed listing for wastes generated by the dyes and pigments industry (see FR 66072, December 22, 1994). We have modified and adapted this policy in subsequent listings. See for example the recent Petroleum Refining proposal (60 FR 57747; November 20, 1995) and the Solvents waste proposal (61 FR 42318; August 14, 1996).

This policy uses a ''weight-of-evidence'' approach in which calculated risk information is a key factor to consider in making a listing determination under 40 CFR 261.11(a)(3). The criteria provided in 40 CFR 261.11(a)(3) include eleven factors for determining ''substantial present or potential hazard to human health and the environment.'' We incorporate nine of these factors, as described generally below, into our risk evaluation for the wastestreams of concern:

—Toxicity (261.11(a)(3)(i)) is considered in developing the health benchmarks used in the risk evaluation.

—Constituent concentrations and waste quantities (261.11(a)(3)(ii) and 261.11(a)(3)(viii)) are used to define the initial conditions for the risk evaluation.

—Potential to migrate, persistence, degradation, and bioaccumulation of the hazardous constituents and any degradation products (261.11(a)(3)(iii), 261.11(a)(3)(iv), 261.11(a)(3)(v), and 261.11(a)(3)(vi)) are all considered in our evaluation of constituent mobility (e.g., leaching from waste) and fate and transport models we used to project potential concentrations of the contaminants to which individuals might be exposed.

We considered two additional factors, plausible mismanagement and other regulatory actions (261.11(a)(3)(vii) and 261.11(a)(3)(x)) in selecting the waste management scenarios we evaluated in our risk assessments. For example, we used information that the waste generators submitted in their Section 3007 questionnaires to decide what types of waste management units are used. Using information about other federal environmental regulatory programs, we concluded that some units or some pathways did not pose risks requiring evaluation.

We separately considered the remaining factor, whether the available information indicated any impact on human health or the environment from improper management of the wastes of concern (261.11(a)(3)(ix)). Thus, we examined a variety of databases for information on damage incidents for the inorganic chemical production processes under investigation. For example, we examined databases for information on potential and actual Superfund sites (CERCLIS), releases reported under the Toxic Release Inventory System (TRIS), civil cases filed on behalf of EPA, and spills and releases reported to the National Response Center (NRC). A full description of our search is in the docket for this rule.

Most of the cases found for these industries typically resulted from spills or releases of products, and did not provide any useful information of possible risks presented by the wastes we evaluated for listing. In a few cases we found sites on the Superfund National Priority List (NPL) that included inorganic manufacturing processes. However these sites usually encompassed a variety of chemical manufacturing and mining industries, and it is difficult to attribute the damage reported to the specific inorganic manufacturing wastes under evaluation. Furthermore, contamination at these sites appears linked to historical management practices at closed or inactive manufacturing plants, and these were not useful in assessing current or potential hazards for the wastes at issue. In addition, Federal and State regulatory controls are now in place that would prevent mismanagement. For example, many of the wastes examined in today's proposal are regulated as characteristic waste, and releases or disposal to the land are addressed under the existing RCRA regulations. We did not find any evidence of actual damage cases.

We describe our decisions under 40 CFR 261.11(a)(3) in more detail in the sector-specific discussion in section III.F below, and in the background documents. Generally, we conducted full-scale risk modeling for 18 wastes in 5 sectors. We found that we could adequately address the risks of the remaining wastes with a variety of less time-consuming approaches. Some were qualitative; others were quantitative, but not as complex as full modeling.

We evaluated one waste using the single criterion set out in 40 CFR 261.11(a)(1) rather than the eleven factors referenced in 40 CFR 261.11(a)(3). This is the first time under this consent decree that we have proposed to make a listing decision based on this criterion. It relies on the existing characteristics to identify wastes posing significant risks and does not require the use of modeling. See the discussion of wastes from the production of antimony oxide in section III.F.1 of the preamble.

Our proposed listing determinations are based upon estimates of individual risk. We relied on individual risk estimates (HQs > 1), and not population risk estimates, because we are concerned about risks to individuals who are exposed to potential releases of hazardous constituents. We believe that using individual risk as a basis for our listing determinations (rather than population risk estimates) also is appropriate to protect against potential risks, as well as present risks that may arise due to the generation and management of particular wastestreams. EPA acknowledges that in cases where small populations are exposed to particular wastes and waste management practices, population risks may be very small. We did not attempt to calculate population risks for the proposed listings. In general, we expect population risks arising from contaminated groundwater due to waste management to be small, because often only a limited number of domestic wells will be near these facilities, and groundwater contamination often moves very slowly. Nevertheless, the increased risk for an exposed individual may be significant. In proposing the listing determinations for K176, K177, and K178, EPA is protecting against the potential risk for exposed individuals, regardless of how many individuals are exposed.

We set out below general observations about some of our approaches to risk assessment.

2. Characteristic Hazardous Waste

We describe in Section a. below our analysis for wastes which are ''100% characteristic''—wastes which all generators report as characteristic and which all generators appear to manage in compliance with applicable hazardous waste regulations. We

describe our approach to wastes which are occasionally characteristic—but managed in compliance—in Section b. below. Finally, we discuss in Section c. one waste which appears to exhibit a characteristic frequently, but does not appear to be managed in compliance with hazardous waste regulations.

a. Wastes consistently exhibiting characteristics. For wastes which these industries identified as characteristic and managed in compliance with hazardous waste regulations, we are proposing to find that there is no ''plausible mismanagement'' scenario to evaluate for listing. (See 40 CFR 261.11(a)(3)(vii).) The Subtitle C rules applying to characteristic wastes adequately protect human health and the environment, especially where waste generators are complying with them. 40 CFR 261.11(a)(3)(x) authorizes us to consider actions taken by other regulatory programs. We believe we can reasonably interpret this to include the rules for characteristic wastes under Subtitle C .

We acknowledge that the regulation of characteristic wastes differs in some ways from the regulation of listed wastes. For example, for characteristic wastes, residues from treatment required by the land disposal restrictions need not always be placed in hazardous waste disposal units. However, we do not regard the differences as ''mismanagement.'' Rather, we believe that both approaches protect human health and the environment. Consequently, for the purposes of this rule we decided that we would not propose to list a ''100% characteristic'' waste unless we found evidence of extraordinary risks under one or more of the other factors in 40 CFR 261.11(a)(3).

For a few of the 100% characteristic wastes in this rule, we found factors warranting further consideration. For example, we found that the sole generator of cadmium pigment wastes codes them as hazardous, arranges for treatment to comply with the land disposal restrictions, and then disposes of treated residues in a Subtitle D landfill. At the same time, we found that the waste contains very high levels of cadmium. We decided to investigate further to ensure that the treatment residues did not present significant risks. We examined data relating to the treatment process and leachate monitoring data from the landfill receiving the residues. Based on these data, we concluded that the residues did not pose risks warranting listing.

b. Wastes which sometimes exhibit characteristics. Information submitted in responses to the Section 3007 questionnaires also showed that there are a number of wastes that exhibit characteristics at some facilities, but not others. Consistent with previous listing decisions (see for example, the most recent petroleum refining listing at 63 FR 42137), we focused on the volumes of waste that did not exhibit characteristics in our listing evaluation. For wastestreams identified as exhibiting characteristics and apparently managed in compliance with applicable regulations, we relied on the ''no plausible mismanagement'' and ''other regulations'' analysis described above. A hypothetical example follows. If one facility generated 40 tons per year of a properly-managed characteristic waste, and a second facility generated 60 tons per year of a non-characteristic waste, we would not evaluate the total of 100 tons of waste under a single approach. Rather, we would evaluate the characteristic waste under the approach described above. For the waste that did not exhibit a characteristic, we would conduct the type of risk assessment described below in section III.E.

c. Characteristic wastes not managed in compliance with Subtitle C. In one case, we found a characteristic waste where we believe that existing Subtitle C rules do not adequately prevent mismanagement. Four facilities generate a baghouse filter waste from the production of antimony oxide. Data from our sampling and analysis at 2 facilities showed exceedences of the toxicity characteristic. Two facilities recycle these wastes in a manner that may comply with applicable regulations. Two other facilities, however, did not identify their waste as characteristic wastes, and appear to manage them in ways which do not comply with Subtitle C rules. Because of this apparent noncompliance, we concluded that it would be appropriate to disregard the characteristic rules in an analysis of the factors in 40 CFR 261.(a)(3). However, we also concluded that it was not necessary to conduct such an analysis. Since this waste fails the toxicity characteristic, it clearly contains levels of constituents which could pose threats to human health via groundwater when placed in a municipal landfill, if leachate were to migrate to a drinking water well at sufficient concentrations. Since the generators are not managing the wastes in compliance with applicable Subtitle C regulations, we assume that this type of mismanagement could occur at other sites. Accordingly, we exercised our authority to propose to list this waste under 40 CFR 261.11(a)(1). As noted above, this provision authorizes (but does not require) EPA to list wastes that exhibit characteristics without the analysis required under 40 CFR 261.11(a)(3). We believe that noncompliance is an appropriate reason to use this authority to list a characteristic waste.

d. Non-characteristic wastes disposed of in hazardous waste units. We identified nine wastes which do not appear to exhibit any characteristic, but which are disposed of in Subtitle C management units. Four of these wastes are sent to combustion unit regulated under Subtitle C of RCRA. The remaining 5 wastes are sent to Subtitle C landfills. We found that all of these wastes receive some treatment before land disposal. In one case available data indicates that the waste meets applicable LDR treatment standards as generated.

In general, these wastes have very limited potential for mismanagement under 40 CFR 261.11(a)(3)(vii). This is particularly true for wastes which generators place in on-site, Subtitle C units with ample capacity. Also, in some cases, some of the wastes are generated in very small quantities (less than 1 metric ton per year). These wastes are distinguishable from a non-characteristic organobromine waste sent to a hazardous waste unit that we decided to list in 1998. That waste had extremely high concentrations of a constituent posing significant risks, and received no treatment (see May 4, 1998; 63 FR 24596).[3] We request comment on the individual rationales set out in the sector-specific discussions and the background documents.

3. Evaluations of Particular Units and Pathways of Release

We are proposing to find that some pathways of release from some units present low risks because they are adequately controlled under other Federal environmental regulations that minimize the likelihood of releases. We are also proposing to find that other risk pathways present low risks due to physical or chemical attributes of the wastes. In some cases, we evaluated all release pathways at a single unit under a combination of these approaches.

a. Wastewater management. Facilities in these industries generally treat wastewaters in on-site wastewater treatment plants and discharge to surface waters, or pretreat the waste and discharge to an off-site wastewater

[3] On April 9, 1999, the D.C. Circuit in Great Lakes Chemical Corporation v. EPA ordered that the organobromine listing determinations be vacated. Accordingly, EPA removed the listings from CFR (see 65 FR 14472: March 17, 2000).

treatment facility, *e.g.,* a Publicly Owned Treatment Works (POTW). Under the Clean Water Act (CWA), discharges to surface waters are controlled under the National Pollutant Discharge Elimination System (NPDES) and require an NPDES permit, while discharges to a POTW are subject to State and national pretreatment standards.[4] Point source discharges for the various sectors in the inorganics listing are regulated under the CWA by the effluent guidelines and pretreatment standards in 40 CFR Parts 415 (Inorganic chemical manufacturing) and 422 (Phosphate manufacturing). Therefore, we did not evaluate NPDES effluent or discharges to POTWs in today's proposal. This approach is consistent with other listing rules. See, for example, 60 FR 57759 (November 20, 1995, petroleum refining wastes proposal). In a few cases, facilities reported disposal of wastewaters by deep well injection in a permitted Class I UIC hazardous waste injection well. In these cases, the wells were units regulated by the Underground Injection Control (UIC) program under the Safe Drinking Water Act (40 CFR Part 144). These wells also had no migration exemptions under Section 148.20 to allow disposal of untreated hazardous waste. Therefore, we did not evaluate this scenario further.

For surface impoundments, we concluded that releases to air were not likely to present concerns. For most sectors, the constituents of concern are nonvolatile metals, and this makes volatilization a highly unlikely pathway for constituents from normal wastewater treatment practices. We recognize that releases of volatile organic chemicals from impoundments may be a potential route of concern for one sector, inorganic hydrogen cyanide production. EPA is developing maximum achievable control technology (MACT) standards for cyanide manufacturing under the Clean Air Act (CAA), which may address these emissions.[5] EPA is evaluating possible air releases from wastewaters in impoundments as part of the MACT rulemaking. Therefore, we did not do any further evaluation of these emissions as part of today's listing determination. We assessed the potential for groundwater releases from the impoundments.

For sectors and wastes where facilities did not use surface impoundments for wastewater management, we determined that ''plausible mismanagement'' would be continued management in existing tank-based treatment systems. We do not view abandonment of existing treatment systems for surface impoundments as ''plausible,'' because the manufacturers have already made a considerable investment in wastewater treatment systems using tanks and will continue to use them. Further, we assumed that wastewater treatment tanks retain sufficient structural integrity to prevent wastewater releases to the subsurface (and therefore to groundwater), and that overflow and spill controls prevent significant wastewater releases. Thus, based on the lack of any significant likelihood of release of the constituents to groundwater, we did not project significant risks to groundwater from these wastes in the tank-based wastewater treatment scenario. We did not model any releases to groundwater from tanks. This is consistent with our approach in other listing rules (see, for example, the proposed rule for chlorinated aliphatics production wastes at 64 FR 46476; August 25, 1999). We also considered the possibility of air releases from tanks. For most wastes, the constituents of concern are nonvolatile metals, making volatilization a very unlikely pathway of release from tanks. For the hydrogen cyanide sector, where volatile compounds are likely and tanks are used in wastewater treatment systems, the tanks will also be covered by other CAA regulations as described above. In addition, in many cases facilities have installed tank covers, further reducing the likelihood of release to the air. As a result, we have not modeled releases to air from tanks for any wastes in this listing determination.

b. Waste solids management. We concluded that we did not need to model any releases of volatile constituents from solids for the same reasons set out above. The management practices of concern for waste solids were landfills, including disposal in on-site and off-site landfills, and in a few cases, waste piles. We evaluated the potential for groundwater releases from all landfills and piles. We also considered the possibility of releases of airborne particulates by a multistep process where we compared the total concentrations of the constituents of concern to a series of soil screening levels (see section III.E.3).

4. Evaluation of Secondary Materials

RCRA gives EPA jurisdiction only over materials that are discarded. EPA's current definition of discard is set out in the definition of solid waste at 40 CFR 261.2. Under this approach, process residuals (or ''secondary materials'') destined for recycling are solid wastes within our jurisdiction if the recycling closely resembles waste management. Conversely, if the materials are recycled as part of an ongoing manufacturing process, they are not solid wastes. The existing rules specifically exclude secondary materials from jurisdiction that are used directly (without reclamation), as ingredients in manufacturing processes to make new products, used directly as effective substitutes for commercial products, or returned directly to the original process from which they are generated as a substitute for raw material feedstock. 40 CFR 261.2(e). In addition, the existing rules allow for closed loop reclamation where secondary materials can be reclaimed and returned to the original production process provided that the entire process is closed, the reclamation does not involve controlled flame combustion, and the reclaimed material is not used to produce a fuel or a material that is used in a manner constituting disposal. (40 CFR 261.4(a)(8)) As discussed in the January 4, 1985, rulemaking, these are activities which, as a general matter, resemble ongoing manufacturing operations more than conventional waste management and so are more appropriately classified as not involving solid wastes. However, materials which would otherwise qualify for exclusion under these provisions are not excluded if EPA finds that the recycling is not legitimate. EPA considers a variety of economic and chemical factors when it determines whether or not a specific recycling practice is legitimate. (See Memorandum from Sylvia K. Lowrance, Director Office of Solid Waste, concerning F006 Recycling, dated April 26, 1989). These determinations are very site-specific and tend to be very time consuming. EPA typically makes them in the context of site-specific enforcement or permitting actions.

The existing rules, however, do not exclude materials that are either contained in or used to produce fuels or that are directly used, or incorporated into a product that is used, in a manner constituting disposal. EPA asserts RCRA jurisdiction for these types of use/reuse

[4] In fact, 40 CFR 261.4 excludes ''any mixture of domestic sewage and other wastes that passes through a sewer system to a POTW for treatment'' (40 CFR 261.4(a)(1)(ii), and industrial wastewater discharges that are point source discharges subject to regulation under Section 402 of the CWA (40 CFR 261.4(a)(2)).

[5] Clean Air Act—Title III: Upcoming MACT Standards—Cyanide Chemical Manufacturing; Unified Air Toxics Website: *http://www.epa.gov/ttn/uatw/mactupd.html:* The hydrogen cynaide industry would also be subject to regulations under 40 CFR Part 60, Subpart YYY under the CAA for volatile organic compound (VOC) emissions from wastewater treatment at facilities in the synthetic organic chemical manufacturing industry (SOCMI), which was proposed September 19, 1994 (59 FR 46780).

circumstances as they more closely resemble conventional waste management rather than ongoing manufacturing. (See 50 FR 637–640, January 4, 1985).

A series of court decisions also address the issue of our jurisdiction over recycled materials. In general, they hold that EPA lacks authority to regulate materials that are immediately reused in an ongoing manufacturing or industrial process. *American Mining Congress* v. *EPA* (824 F. 2d 1177 (D.C. Cir. 1987) (AMC I)); *American Mining Congress* v. *EPA* (907 F. 2d 1179, 1186 (D.C. Cir. 1990) (AMC II)); *American Petroleum Institute* v. *EPA* (216 F. 3d 50 (D.C. Cir. 2000)). The most recent decision, *Association of Battery Recyclers, Inc.* v. *EPA* (208 F. 3d 1047 (D.C. Cir 2000)), remanded a rule regulating the reuse of some closely related materials. We are still evaluating the impacts of this decision. However, the remand does not affect this rule because we are not relying on the exemptions in the remanded rule.[6]

For almost all of the residual materials from these manufacturing processes which are re-used or recycled in some way, we decided not to attempt to determine whether the recycling practice is not subject to regulation under the court decisions and regulations described above. Such determinations can be very time-consuming, particularly where we find recycling practices that appear not to be regulated, and then need to determine whether or not such practices are legitimate. Consequently, we decided that it would be more efficient to examine first the potential risks posed by the reported recycling practices. If we found no significant risks, we would decide not to list the material. If, on the other hand, we found risks, we evaluate the recycling practice prior to making a listing decision.

To assess the risks of materials recycled on-site by reusing them in one of the consent decree manufacturing processes, we first evaluated the management of the materials prior to their re-use. We looked for closed piping, covers on containers, or similar barriers to releases to the environment. Where we found such management practices, we determined that there was no significant potential for releases. We then evaluated the potential for releases from the consent decree process itself. We found that the only points at which releases were expected were either those where we were already evaluating solid wastes for the purposes of this listing or points where the facility released uncontained gases outside of RCRA jurisdiction. Consequently, we felt that we were evaluating all of the potential risks (within our jurisdiction) associated with the recycling of these materials. In the antimony oxide sector, however, we found one residual that was being held in containers for several years for potential reuse. Our rules identify this practice as ''speculative accumulation'' and classify the materials held in such a manner as solid wastes. Accordingly, we assessed the risks posed by these accumulated wastes.

We found that a few materials are inserted into separate manufacturing processes co-located on-site with consent decree processes. We evaluated the potential for releases prior to reinsertion into that separate process. However, as explained above in section III.B, we did not evaluate any risks posed by use of residuals in processes that are not subject to our consent decree deadline.

We also considered the risks of materials recycled off-site. We considered the potential for release before the materials were transferred off-site. We did not assess the off-site uses which involved non-consent decree manufacturing processes. In a few cases, however, we found that the reuse involved land placement or burning for energy recovery. These activities are always regulated as waste management under the rules and court decisions described above. In those cases, we concluded that the materials were wastes from the consent decree process where they were generated, and we evaluated risks posed by the use. For example, we evaluated the risks posed by use of residual materials from the production of boric acid as fuels for cement kilns. In one case involving antimony oxide residuals, we found that the residuals were sent off-site to another smelter producing antimony oxide. This smelter happens to be located outside of the country. We did not evaluate risks from its residuals, as we have no legal jurisdiction to regulate them. We have evaluated the production of antimony oxide within the U.S. in this rulemaking, so we have evaluated the risks that would be posed if this generator changed its practice and sent the materials to an antimony oxide smelter located within the U.S.

For purposes of convenience, in the sector specific discussions below (and in the various background documents) we describe all of the residuals as wastes. We emphasize, however, that we have not determined whether any of the residuals that are recycled are solid wastes as defined in 40 CFR 260.2. We believe it is more appropriate to leave such site-specific determinations to other decision-making processes.

E. Description of Risk Assessment Approaches

Before turning to the details of the risk assessment approaches used, we want to highlight two general issues. First, we note that for this proposal we used a variety of screening methodologies to assess a large number of wastes. Due to time constraints imposed by the consent decree schedule, we chose —where appropriate— to use these methodologies rather than conducting more time-consuming, full-scale, risk assessment modeling. In general, however, we believe that these screening methodologies conservatively assessed risks, so that wastes that we ''screened out'' are unlikely to present significant risks.

Second, we want to describe our selection of plausible mismanagement practices for both screening and full modeling assessments. In general, we assessed the types of management units which, according to data available to us, facilities have actually used or contemplated using. Frequently, we found that facilities had made economic investments that would make them likely to continue to use the same types of units. For example, where facilities had paid to install tanks to store or treat wastes, we assumed that they would continue to use tanks rather than place wastes in pits or surface impoundments. Furthermore, we found that some waste quantities were so large that it would be prohibitively expensive to transport wastes off-site. Similarly, where facilities had installed piping to return residual materials to their production processes, we assumed that they would continue to use these systems to recycle those residuals. We also assumed that such facilities had found it more economical to return those residuals to their processes, and were thus not likely to send them to landfills or other types of disposal units.

We seek comment on all data, assumptions and methodologies used in our risk assessment for this proposal.

[6] On May 26, 1998, we promulgated a conditional exclusion from the definition of solid waste for secondary materials (other than listed wastes) generated within the primary mineral processing industry from which minerals, acids, cyanide, water, or other values are recovered by mineral processing, with certain provisions. Because this conditional exclusion only applied to non-listed wastes, and we were making listing determinations, we did not use this exclusion as a basis to not evaluate wastes for listing purposes. On April 21, 2000, the D.C. Circuit Court issued a decision vacating a portion of this conditional exclusion. [See *Association of Battery Recyclers, Inc.* v. *EPA*. 208 F.3d 1047 (D.C. Cir. 2000)].

1. What Risk Thresholds Were Used?

EPA's listing program generally defines risk levels of concern for carcinogens as risks within or above a range of 1×10^{-6} to 1×10^{-4} (from 1 in 1,000,000 to 1 in 10,000) at the upper end of the risk distribution (*e.g.,* 90th or 95th percentile risk for a particular exposure scenario). The level of concern for non-cancer effects is generally indicated by a hazard quotient (HQ) of 1 or greater at the upper end of the distribution. Consistent with the listing policy described in the dyes and pigments proposal (59 FR 66075–66078) we used a 1×10^{-5} risk level and/or HQs of one to identify which wastes are candidates for listing. To make a listing determination, we then used a weight-of-evidence approach that considers the risk estimates along with other information related to the factors described in 40 CFR 261.11(a)(3). For cancer, a risk threshold of one in 1,000,000 represents the probability that an individual will develop cancer over a lifetime as a result of exposure to a chemical contaminant. When we estimate the lifetime excess cancer risk, we use an upper bound estimate of the carcinogenic slope factor (CSF) as derived from laboratory studies in animals or from human epidemiological studies. In addition, because the CSF typically relies on a number of extrapolations (*e.g.,* from animals to humans and from high doses to low doses) there is some uncertainty in the value of the CSF.

For non-cancer effects, which include a wide variety of health effects, we used EPA's reference dose (RfD) as a risk threshold. A reference dose is an estimate of an oral exposure that is likely to be without an appreciable risk of adverse effects in the general population, including sensitive individuals, over a lifetime. The RfD can be derived from a NOAEL, LOAEL, or benchmark dose. Uncertainty factors are applied to address limitations of the available toxicological data and are necessary to ensure the RfD is protective of individuals in the general population. The use of uncertainty factors is based on long-standing scientific practice. Uncertainty factors when combined commonly range from 10 to 1000 depending on the nature and quality of the underlying data. The RfD methodology is expected to have an uncertainty spanning perhaps an order of magnitude. To assess risks associated with non-cancer effects, we used a hazard quotient (HQ), which is defined as the ratio of the estimated dose of a given chemical to an individual to the reference dose for that chemical. A hazard quotient (HQ) of one (1) indicates that the estimated dose is equal to the reference dose (RfD) and, therefore an HQ of 1 is EPA's threshold of concern for non-cancer effects. Usually, doses less than the RfD (HQ<1) are not likely to be associated with adverse health risks and, therefore, are less likely to be of regulatory concern. As the frequency and/or magnitude of the exposures exceeding the RfD increase (HQ>1), the probability of adverse effects in a human population increases. However, it should not be categorically concluded that all doses below the RfD are ''acceptable'' (or will be risk-free) and that all doses in excess of the RfD are ''unacceptable'' (or will result in adverse effects).

The values of the CSF and RfD that we use for assessing risks are generally taken from EPA's on-line toxicity data base called IRIS. However, in some cases we used EPA's compilation of toxicity benchmarks known as HEAST or other sources, such as toxicological issue papers prepared by EPA's National Center for Environmental Assessment (NCEA).[7]

2. What Leaching Procedures Were Used?

As noted in III.C, we used the TCLP and SPLP leaching procedures to evaluate the wastes in today's rule. EPA developed the TCLP as a tool to predict the leaching of constituents from the waste in a municipal solid waste landfill, and the TC regulations use this method to determine if a waste is hazardous under 261.24 (see the Toxicity Characteristic rule, 55 FR 46369; November 2, 1990). We have also used the TCLP in the listing program to estimate leaching concentrations for use in groundwater modeling (for example, see the recent petroleum listing, 63 FR 42110, August 6, 1998). We believe the TCLP is the most appropriate leaching procedure to use for wastes in municipal landfills, because the leaching solution is similar to the type of leachate generated from the decomposition of municipal waste. The TCLP leaching solution is a solution containing acetic acid that is adjusted to a pH of 4.93 or 2.88, depending on the acidity of the waste sample.

EPA developed the SPLP as a method to predict leaching from wastes or soils under exposure to the slightly acidic, dilute solution generated by normal rainfall. The SPLP test uses a leach solution which mimics acid rain, while the TCLP uses a leach solution which mimics acids formed in municipal landfills. In past actions, EPA has recognized that the TCLP's use of organic acids may not be appropriate for disposal scenarios that do not involve municipal landfills. For example, in the proposed rule for management and disposal of lead-based paint debris, EPA used the SPLP to assess leaching from landfills that do not accept municipal wastes (see 63 FR 70189; December 18, 1998). Similarly, EPA utilized the SPLP in screening low hazard wastes as part of its 1989 Bevill determination (see 54 FR 36592; September 1, 1989).

In the context of EPA's more recent mineral processing sector actions, we considered the relative merits of both the TCLP and the SPLP for various wastes in the mineral processing industries; EPA decided to continue to rely on the TCLP for defining characteristically hazardous Bevill wastes, in part because we found that disposal in municipal landfills did occur for some sectors. See the Land Disposal Restrictions Phase IV Final Rule at 63 FR 28598 (May 26, 1998). For today's rule, however, we have specific data showing that some wastes do not go to municipal landfills and are unlikely to be disposed of in municipal landfills. We used the SPLP sampling results for wastes that were not likely to go to municipal landfills, and we used the TCLP results for wastes going to municipal landfills.

3. How Were Wastes Screened To Determine If Further Assessment Was Needed?

We used a number of approaches to eliminate from further consideration those wastes that could not plausibly pose unacceptable risks. This served to identify those wastes and chemical constituents that required further assessment. Different screening approaches were used depending on the type of waste management practices employed in the industry and, in some instances, the waste volume and the location of the waste management units.

For wastes that are managed in landfills, groundwater contamination is the primary source of human exposures, particularly for certain metals and other inorganic compounds that are nonvolatile, such as those present in the wastes that are the subject of today's rule. We compared leachate concentrations derived from the TCLP or SPLP test measurements to levels in drinking water that are protective of human health. These levels, referred to as health-based levels (HBLs), are designed to be protective of both

[7] EPA's Integrated Risk Information System (IRIS) may be found at http://www.epa.gov/iris. See also ''Risk Assessment for the Listing Determinations for Inorganic Chemical Manufacturing Wastes'' (August 2000) for a discussion of the toxicity benchmark values used in today's rule.

children and adults. Health-based levels (HBLs) are levels in environmental media that would not exceed EPA's risk thresholds given conservative assumptions regarding exposure (*e.g.*, a level in drinking water that would not exceed a risk threshold for an individual whose drinking water intake was at the high end of the distribution for the general population).[8] Although an HBLs represents a concentration level at the point of exposure, we conservatively assumed direct contact with the wastes (*i.e.,* no dilution) for the purpose of screening out wastes and chemical constituents that could not pose unacceptable risks and, therefore, do not merit further analysis. As explained previously, we used SPLP measurements for wastes that are managed in landfills containing only industrial wastes and TCLP measurements for wastes that are managed in landfills which also contain municipal wastes. For wastewaters that are managed in surface impoundments, we used the concentration in the filtered liquid (*i.e.*, the SPLP filtrate) because the filtrate is more representative of the fraction of the waste that could infiltrate into the subsurface environment. Regardless of the type of measurement, if the result of the chemical analysis for a particular compound was below the limit of detection but the compound was detected in the waste, then we used ½ the value reported by the laboratory as the limit of detection for that compound. Any chemical contaminant in a waste that did not screen out against HBLs (*i.e.,* the waste concentration was a factor of 2 or less times the HBLs[9]) we identified as a constituent of concern (CoC) requiring further assessment. However, very low volume wastes were subject to further screening, as described below.

For very low volume wastes that did not screen out against HBLs, we performed an additional conservative screen to determine if the waste could plausibly pose a risk to human health when disposed of in a landfill. Typically wastes generated in volumes of less than 1 or 2 metric tons per year were considered as candidates for this *de minimis* analysis. This analysis assumed that the entire mass of the chemical contaminant in a volume of waste that is generated in a year's time would leach out of the waste and infiltrate into groundwater in the same year. The only dilution that was assumed to occur was with the volume of water that infiltrated into the landfill. To minimize the amount of dilution we chose a conservative infiltration rate based on the infiltration that could occur for a relatively low permeability soil underlying a relatively small landfill (corresponding to the 10th percentile of the distribution of municipal landfill areas nationwide). However, in some cases the resulting infiltration was less than the amount of water that would be withdrawn from a well by a household for domestic usage. In these instances, we diluted the infiltrate into the minimum volume of water needed to support a household well, which we estimated from data on U.S. per capita water consumption assuming a family of four. The concentration derived using this procedure was then compared to the HBLs. Any chemical contaminant that did not screen out as a result of this analysis we identified as a constituent of concern (CoC) requiring further assessment. While we do expect the *de minimis* screen to be conservative overall, the degree to which it is conservative depends on many waste and site-specific factors. (For example, our sampling and analysis data indicate that in some cases essentially all of the chemical constituent leached out of the sample over the duration of the leach test.)

For wastes managed in waste piles and landfills, we performed a multi-level screening analysis to determine if further assessment of the air pathway was needed. Wind blown dust from wastes managed in piles is a potential source of human exposures. This pathway is also possible for landfills, but likely to result in much lower releases due to the common usage of daily and longer-term cover at landfills. In the first level screen we compared the waste contaminant total concentrations to background levels in soils. Background soil levels were taken from published compilations of levels in native soils nationwide and were generally characterized using a geometric mean or (in a few instances) an arithmetic mean concentration of the available data.[10] If the waste concentrations exceeded background levels in soils, we performed a second level screen by comparing the waste concentrations with soil ingestion HBLs. Soil ingestion HBLs assume direct contact with the waste and, therefore, are more conservative than HBLs based on inhalation exposures. In those instances when the waste concentrations exceeded both background levels and soil ingestion HBLs, we performed a third level screen using the results of EPA's air characteristics study. This study developed levels of chemical contaminants in wastes that are protective of human health with respect to inhalation exposures when managed in a variety of ways.[11] In particular, air characteristic levels were developed for waste piles at several different distances from a potential receptor. We used the air characteristic levels corresponding to a downwind distance of 25 or 150 meters (80 or 500 feet). Because the air characteristic levels include the effect of atmospheric dilution, they are significantly higher than soil ingestion HBLs. In most cases waste concentrations are either below background or below soil ingestion HBLs for the wastes EPA evaluated. Moreover, we found no instances in which air characteristic levels are exceeded. In the cases where waste concentrations exceeded the soil ingestion levels, the exceedence was typically less than a factor of 2 to 3. We believe it is highly unlikely that off-site exceedences due to windblown dust from piles or landfills would actually exceed the soil ingestion levels given this low level of exceedence in the waste. Therefore, we conclude that risks associated with particulates from piles and landfills transported by an air pathway are not significant and no further assessment is needed.

[8] Details on how HBLs are derived may be found in the risk assessment background document for today's proposal, ''Risk Assessment for the Listing Determinations for Inorganic Chemical Manufacturing Wastes'' (August 2000).

[9] We used professional judgment to screen out constituents with concentrations within a factor of two of the HBLs. Historically, our models have suggested that the dilution and attenuation of constituents in the subsurface will generally result in dilution and attenuation factors (DAFs) of 2 or greater. (See, for example, the DAFs estimated for the petroleum refining listing determination, 63 FR 42110, and the docket for today's rulemaking for DAFs calculated to support today's proposal.) If our consideration of site-specific factors had indicated that a very low DAF were likely for actual exposure (*e.g.* known drinking water wells placed very close to the management until boundary), we would have modeled that waste rather than screening it out using professional judgment.

[10] Different statistics may be used for characterizing background levels depending on the data available. The mathematical properties of the arithmetic mean allow it to be used when only average values rather than the original data are available. However, if the original data are available, the data can be pooled and a geometric mean can be calculated. If the data are positively skewed, as is often the case, the arithmetic mean will be higher than the geometric mean. We consider either statistic to be a central tendency measure of background levels. However, background levels are highly variable and may be considerably higher or lower than the national average at any given location. See, for example, the U.S. Geological Survey paper ''Elemental Concentrations in Soils and Other Surficial Materials in the Conterminous United States,'' paper 1270, U.S. Government Printing Office, 1984.

[11] See U.S. EPA, ''Revised Risk Assessment for the Air Characteristic Study,'' Office of Solid Waste, EPA 530–R–99–019, November 1999.

EPA derived HBLs for chemical contaminants from toxicity benchmarks and a set of exposure assumptions that differ depending on the type of health effect and exposure pathway. For carcinogenic effects, HBLs were derived from a cancer slope factor (CSF) for the oral route of exposure. For non-cancer effects, HBLs were derived from EPA's oral reference dose (RfD) for the compound. Risk thresholds were as described previously. Drinking water and soil ingestion HBLs for individual chemical contaminants are presented elsewhere.[12] The exposure assumptions we used for deriving the HBLs are described as follows.

For drinking water exposures, we derived HBLs for carcinogenic effects for an adult exposed for 30 years and having a tap water intake of 1.4 liters per day. This represents 21 milliliters per day on a per kilogram body weight basis, which is the mean tap water intake for adults. A duration of exposure of 30 years represents the 95th percentile of the distribution of residential occupancy periods for adults nationwide. We derived HBLs for non-cancer effects for a child having a tap water intake of 1.3 liters per day. This represents 64 milliliters per day on a per kilogram body weight basis and corresponds to the 90th percentile of the distribution of tap water intakes in children that are 1 to 10 years of age.[13] Because the drinking water HBLs incorporate conservative exposure assumptions, we consider them to be appropriate for screening purposes.

Soil ingestion HBLs were derived from either the CSF or the RfD assuming a soil ingestion rate of 200 milligrams per day and an exposure duration of 8 years. A soil ingestion rate of 200 milligrams per day (about 3/100th of a teaspoon) is a conservative estimate of the mean intake rates for children in the age range of 1 to 7. An exposure duration of 8 years is an estimate of the mean residential occupancy period for a 6 year old child. In selecting these values for use in deriving soil ingestion HBLs, we considered the likelihood that children would actually come into direct contact with the wastes.

In cases where wastes are known to be managed in on-site landfills or surface impoundments that are located adjacent to or in close proximity to surface waters, we used additional screening criteria to identify wastes that could have the potential to adversely impact surface waters before eliminating the wastes from further consideration. We used EPA's national water quality criteria for this purpose. Specifically, we compared waste concentrations (*i.e.*, SPLP measurements for wastes managed in on-site landfills and SPLP filtrate measurements for wastes managed in surface impoundments) directly to ambient water quality criteria that have been established for the protection of both human health and aquatic life. Any chemical contaminant in a waste managed under these circumstances that did not screen out against ambient water quality criteria (within a factor of 2) we identified as a constituent of concern (CoC) requiring further assessment.

EPA recently republished ambient water quality criteria for a large number of chemical contaminants (see 63 FR 68354; December 10, 1998). Separate criteria for the protection of aquatic life have been established for fresh water and salt water. In a number of instances waste management units are located adjacent to estuarine environments. In these cases, for screening purposes, we used the lower of the fresh water and salt water criteria.

4. How Was the Groundwater Pathway Evaluated?

We conducted modeling analyses to assess possible risks to human health from wastes managed in land-based units such as landfills and surface impoundments. We used fate and transport models to estimate contaminant concentrations that might occur in a residential drinking water well from migration of uncontrolled releases of leachate from a waste management unit through the subsurface environment. We assessed human exposures to these contaminants from information on the amount of tap water an individual drinks and the length of time an individual might reside at a residence and utilize water from a residential well. We then assessed what the human health risks would be as a consequence of such exposures.

We took a probabilistic approach to the assessment of human exposures. In this approach, we used Monte Carlo simulation techniques to determine the distribution of groundwater concentrations to which an individual could be exposed and combined this with distributional data for the general population on the intake rates of tap water and the duration of exposure. We then assessed the risks to human health from both the middle (central tendency) and upper (high end) portions of the distribution of human exposures. EPA defines high end as the 90th percentile and greater of the distribution of exposures in the population. Central tendency generally refers to the mean or 50th percentile of the distribution. Central tendency and high end estimates may be generated using either probabilistic or deterministic approaches.[14]

We evaluated potential groundwater exposures over a 10,000 year time period. Evaluating peak doses over this time horizon allows the model to capture the slow movement of some chemicals through the subsurface. While exposure assumptions (*e.g.,* land use patterns, climate, environmental and other exposure assumptions) are expected to change over 10,000 years, such changes are difficult to predict. We believe such a time period is appropriate to ensure human health is protected. Even with long time periods, we are still concerned with the risk that would result once contamination reaches potential drinking water wells. Given that the metals of concern do not degrade in the environment, we believe a long modeling time period is necessary. Further, there is uncertainty in when peak concentrations at the receptor well may occur, and using the 10,000 year time frame makes it more likely that we will capture the peak risk in our evaluation. EPA has used similar time horizons for groundwater modeling in past hazardous waste rules.[15]

For modeling chemical concentrations in ground water, many input parameters were varied. These included waste characterization data (*e.g.,* chemical concentrations and waste volumes), waste management practices (*e.g.,* waste management unit size and infiltration rates), hydrogeological parameters (*e.g.,* depth to water table, hydraulic conductivity, and aquifer thickness), and chemical parameters (*e.g.,* soil-water partition coefficient). We conducted extensive sensitivity analyses to determine which of these parameters had the greatest influence on the risk results. For a detailed discussion of the ground water analysis, including parameter distributions, input assumptions, and sensitivity analyses, see the risk assessment background document for today's proposal, ''Risk Assessment for the Listing Determinations for Inorganic Chemical Manufacturing Wastes'' (August 2000).

[12] See the risk assessment background document for today's proposal, ''Risk Assessment for the Listing Determinations for Inorganic Chemical Manufacturing Wasters'' (August 2000).

[13] See EPA's ''Exposure Factors Handbook'' (EPA/600/P–95/002Fa), August 1997, for additional details on human exposure factors.

[14] We relied upon the probabilistic risk estimates for today's proposal. However, both deterministic and probabilistic approaches are presented in the risk assessment background document.

[15] See HWIR proposal at 64 FR 63429, November 19, 1999, and the final rule for the recent listing of wastes from petroleum refining at 63 FR 42157, August 6, 1998.

In assessing groundwater exposures for wastes managed in off-site landfills, we considered the locations of every industrial and municipal landfill known to receive the wastes and the volume of wastes managed at each of these sites. In so doing, we considered only that volume of waste that is currently not being managed as hazardous waste. For wastes managed on-site by multiple facilities, we generally considered only those facilities where groundwater exposures are expected to be the highest. These locations were identified by considering the concentration levels of chemical constituents in the waste managed at the site and the proximity of on-site waste management units, namely landfills and surface impoundments, to potential off-site receptors. Our rationale for selecting particular locations for conducting modeling analyses is discussed in section III.F for the specific inorganic sectors.

a. *How were contaminant concentrations in groundwater modeled?* For modeling fate and transport in the subsurface environment, we used the groundwater model EPACMTP (EPA's Composite Model for Leachate Migration with Transformation Products). The model consists of two coupled modules: (1) A one-dimensional module that simulates infiltration and dissolved contaminant transport through the unsaturated zone, and (2) a three-dimensional saturated zone flow and transport module. Fate and transport processes accounted for in the model are advection, hydrodynamic dispersion, sorption equilibria, hydrolysis, and dilution from recharge to the saturated zone. The model assumes that the soil and aquifer are uniform porous media. EPACMTP (as used in this analysis) does not account for heterogeneity of the aquifer or for preferential migration pathways such as fractures and macro-pores or for colloidal transport, any or all of which could be important at a particular site. Although EPACMTP simulates steady-state groundwater flow in both the unsaturated zone and the saturated zone, the model (as used in this analysis) simulates contaminant transport from a finite source and predicts the peak contaminant concentration arriving at a down-gradient groundwater well. Only migration of chemical contaminants within the surficial aquifer is modeled by EPACMTP. We did not model migration of contaminants to deeper aquifers but, instead, based our assessment on exposures that might occur from groundwater withdrawn from the uppermost aquifer where contaminant concentrations are expected to be the highest.

Equilibrium sorption of chemical contaminants onto soil and aquifer materials is parameterized in the EPACMTP model using a soil-water partition coefficient (Kd). For today's proposed rule, we used values for Kd that have been derived from field studies and have been published in the scientific literature. An empirical distribution was used to characterize the variability of Kd for chemical contaminants for which sufficient published data were available. However, for several chemical contaminants having relatively few published values (*e.g.,* antimony and thallium), a log uniform distribution was used.[16] Our use of empirically derived partition coefficients assumes that sorption is linear with respect to groundwater concentration (*i.e.,* the Kd isotherm is linear). However, sorption is not unlimited and will tend to level off as groundwater concentrations increase beyond the linear range (*i.e.,* the Kd isotherm becomes non-linear). This condition is most likely to occur in the unsaturated zone where dilution is limited, if leachate concentrations are sufficiently high.

EPA has sometimes used the MINTEQA2 equilibrium speciation model to estimate Kd's for a variety of metals rather than relying solely on field measurements. However, recently a number of technical issues have been raised concerning the model and its application. EPA is in the process of evaluating the model to address those issues. Therefore, we have decided not to use MINTEQA2 for today's proposed rule. Once the evaluation is completed and the issues are satisfactorily resolved, EPA may again choose to use the model in an appropriate form in future rulemakings.

Infiltration of leachate from landfills into the subsurface is modeled using the HELP model (Hydrologic Evaluation for Landfill Performance), a quasi-two-dimensional hydrologic model used to compute water balances for landfills. We assumed that landfills have a final earthen cover but no liner or leachate collection system. The net infiltration rate that is calculated by the model considers, among other factors, precipitation, evapotranspiration, and surface runoff and depends on the type of soil and the climate where the landfill is located. For surface impoundments, the infiltration rate is estimated from the liquid depth in the impoundment and from the hydraulic conductivities and thicknesses of the sediments and the underlying soil. We assumed that surface impoundments have no liner or leachate collection system. Unconsolidated or loose sediments are treated as free liquid so that the pressure head on the underlying, consolidated sediments is determined by the depth of the liquid in the impoundment and the depth of the unconsolidated sediments. As sediment accumulates at the base of the impoundment, the weight of the liquid and upper sediments acts to compress (or consolidate) the lower sediments. The result is the formation of a consolidated sediment layer having a hydraulic conductivity that is much lower than the previously unconsolidated sediment.

We assumed that landfills have an operational life of 30 years.[17] In landfills, leaching of contaminants from the waste leads to an exponential decrease in the leachate concentration with time. The rate at which this occurs depends on the volume of waste disposed of in the landfill and the total concentration of chemical contaminants in the waste. We used the measured TCLP concentration (for disposal in a municipal landfill) or SPLP concentration (for disposal in an industrial landfill) as the initial leachate concentration for modeling. In contrast, we assumed that surface impoundments have an operational life of 50 years.[18] Many surface impoundments are periodically dredged and, therefore, can be maintained in service for longer periods of time. With surface impoundments, leachate concentrations are not expected to decrease over time and, therefore, leachate concentrations are assumed to remain constant during their operational life. We used the total concentration of chemical contaminant measured in the wastewater or (for wastewaters with high levels of solids) the concentration measured in the SPLP filtrate as the leachate concentration for modeling.

The fate and transport simulation modules in EPACMTP are linked to a Monte Carlo module to allow quantitative consideration of variability

[16] A log uniform distribution is a distribution that has equal probabilities at all percentiles when the parameter is transformed into logarithms. For these chemical constituents, we used a log uniform distribution that was centered on the geometric mean of the available data and had a width of 3 logs. This was done to better account for the variability normally seen in measurements of Kd.

[17] U.S. Environmental Protection Agency, ''Draft National Survey of Solid Waste (Municipal) Landfill Facilities,'' Office of Solid Waste, Washington, D.C., 1988 (EPA/530–SW–88–034).

[18] See assumptions made for the recent proposed hazardous waste identification rule at 64 FR 63382; November 19, 1999.

and uncertainty in groundwater concentrations due to variability and uncertainty in model input parameters. We use a regional site-based methodology to associate the appropriate regional climatic and hydrogeologic conditions to the location of actual waste management sites. This methodology accommodates dependencies between the various model input parameters. In this approach, a site location is assigned to one of 13 hydrogeologic regions and one of 97 climatic regions that are linked to databases of climatic and hydrogeologic parameters. A climatic data set provides infiltration and recharge values for three soil textures at each of 97 climatic centers in the contiguous United States. The soil textures are based on a Soil Conservation Service soil mapping database and U.S. Department of Agriculture definitions of coarse, medium, and fine soil textures. (These textures are represented in EPACMTP by sandy loam, silt loam, and silty clay loam, respectively.) Infiltration rates for the waste management unit and the recharge rate for the surrounding region were determined for each soil type and climatic center using the HELP model. A site location is generally assigned to the climatic center that is geographically closest to the site.

Each site location is also located on a groundwater resource map (from a U.S. Geological Survey inventory of State groundwater resource maps) and a hydrogeologic region is assigned to the site based on the primary aquifer type at that location. A hydrogeologic database provides a distribution of values for depth to groundwater, aquifer thickness, hydraulic gradient, and hydraulic conductivity for each of 13 hydrogeologic regions. The hydrogeologic data base (HGDB) was developed from a survey of hydrogeologic parameters for approximately 400 hazardous waste sites nationwide. These site-specific data were then regrouped according to hydrogeologic classifications, and a distribution of parameter values was generated for each of the 13 hydrogeologic regions (made up of 12 specific hydrogeologic environments and one miscellaneous category). In the analysis for today's rule, we modified the above approach for on-site waste management units to enable available site-specific information on depth to groundwater to be used in place of the values found in the database.

We also used a regional site-based methodology to associate the appropriate soil characteristics to a given site location. In this approach, a distribution of soil textures at a site is determined by associating the site location with a soils classification region. We defined soil classification regions from information on the soil types found within a 100 mile radius of the site location. The distribution of soil textures for the region was determined by identifying the soil texture classifications from data contained in the U.S. Department of Agriculture (Natural Resources Conservation Service) STATSGO (State Soil Geographic) data base. The predominant soil textures within each mapping unit (which represents a collection of soils) were identified and the fraction of the three soil textures used in the EPACMTP model were determined (i.e, sandy loam, silt loam, and silty clay loam). These soil classification regions were used for modeling off-site municipal and industrial landfill sites. A similar approach was taken for on-site landfills and surface impoundments except that the predominate soil textures from mapping units that correspond to the site location itself were identified. These were compared for consistency with other soils information available for the site. Once the fraction of the three soils textures is determined for a given site location, a distribution of soil parameter values is generated from information on the distribution of soil parameter values for the three soil textures and the fraction of each soil texture for the site. These parameters are used for modeling groundwater flow and contaminant transport in the unsaturated zone and include saturated conductivity, moisture retention properties, water content, and organic matter content.

A full description of the groundwater modeling analyses conducted for today's proposed rule may be found in the background document, ''Risk Assessment for the Listing Determinations for Inorganic Chemical Manufacturing Wastes'' (August, 2000).

b. How were human exposures assessed? Our assessment of human exposures to contaminated ground water is based on a residential drinking water scenario. A different approach was used for determining the location of exposure depending on whether the wastes are managed on-site or are shipped off-site for disposal. For waste shipped to off-site municipal landfills, we used EPA's National Survey of Municipal Landfills [19] to determine the distance from the landfill to the receptor well. We also used these same data for off-site industrial landfills. For wastes managed on-site in either landfills or surface impoundments, we attempted to determine the closest point at which a residential well could be located and, therefore, the point at which human exposures could plausibly occur. We considered the location of the facility property boundary, the type of land use adjacent to the property boundary, the presence of surface waters that could intercept ground water flow, utilization of ground water for residential or agriculture uses, and the existence of residential drinking water wells in the direction of ground water flow. For both on-site and off-site waste management, we assumed the receptor well was located down-gradient from the waste management unit and that ground water is withdrawn from the top ten meters of the aquifer and within the lateral extent of the contaminant plume. Exposures were further assumed to occur out to a distance of a mile from the waste management unit.

Our assessment of human exposures did not consider naturally occurring background levels in ground water. Background levels in ground water are not a significant source of human exposure for several of the more important chemical constituents in the wastes that are the subject of today's proposal (*e.g.*, antimony and thallium). However, for manganese, dietary exposures are a significant source of background exposures. We did not attempt to quantify the cumulative risks from both dietary and drinking water exposures combined and, therefore, this is a source of uncertainty in our assessment of risks from manganese in these wastes.

Human exposures were characterized in terms of lifetime average daily dose (LADD) and average daily dose (ADD) for both children and adults. We used the LADD for assessing cancer risks and the ADD for assessing risks from non-cancer effects (including reproductive, developmental, neurological, cardiovascular, hematologic, metabolic, and a wide variety of other physiologic effects). Exposures to children of age one to six years and adults of age 20 to 64 years were assessed. We used information from EPA's Exposure Factors Handbook [20] to characterize tap water intake rates for individuals and residential occupancy periods of households (and, therefore, the length of time an individual could be exposed to contaminated ground water). Distributional data on tap water intake rates for individuals and residential occupancy periods for households were

[19] *Ibid.*

[20] U.S. Environmental Protection Agency, ''Exposure Factors handbook'', Volumes I and III, Office of Research and Development, National Center for Enironmental Assessment, Washington, DC., August 1997 (EPA/600/P–95/002Fa and c).

used to generate both the ADD and LADD exposure estimates. For assessing lifetime exposures, we averaged the well water concentrations over the duration of exposure (*i.e.*, the residential occupancy period). We also averaged the tap water intake rates over the duration of exposure to account for the changes in tap water intake rates with age that are seen among children. For estimating the ADD, we used the peak 9-year average well water concentration but did not further average the estimated exposure (which we believe would be inappropriate given the range of possible health effects we want to protect against). Previous work with the EPACMTP ground water model has shown that the peak 9-year concentration and the maximum predicted concentration are nearly identical.

A full description of the methods and data used in the exposure assessment for today's proposed rule may be found in the background document, ''Risk Assessment for the Listing Determinations for Inorganic Chemical Manufacturing Wastes'' (August, 2000).

5. How Was the Surface Water Pathway Evaluated?

A number of facilities that generate wastes covered by today's proposed rule are located adjacent to rivers or bays. As a consequence, the potential exists for subsurface releases of chemical contaminants from on-site management of the wastes to enter these river and bay systems through ground water inflow. In instances where no direct contact with ground water is likely to occur (as there would otherwise be if, for example, ground water was being used for residential drinking water), it becomes important to evaluate the potential water quality impacts of these releases on surface waters in the context of hazardous waste listings. However, we wish to emphasize that the surface water impacts considered in today's proposed rule are due to subsurface releases to ground water only. Direct discharges to surface waters are already regulated by the Clean Water Act under the NPDES permit system and are not considered further in today's proposal.[21]

We conducted a screening level analysis to evaluate potential surface water impacts. In this analysis, we estimated the volume of leachate that would infiltrate into ground water and assumed that this entire volume would be intercepted by surface water. Because this is a screening analysis, we made conservative assumptions that are likely to overstate the infiltration of leachate and, therefore, the potential release to surface water. For example, for on-site landfills, we assumed a soil type (sandy loam) that is likely to overstate the infiltration rate even in the absence of liners or leachate collection systems. Similarly, for surface impoundments we assumed a sludge thickness (8 inches) and soil type (sandy loam) that is likely to overstate the infiltration rate. In addition, we assumed no retardation in the migration of chemical contaminants in ground water due to sorption or other processes.

Due to the nature of these releases, which are likely to occur over a wide area, we assumed that the inflow of contaminated ground water was rapidly diluted into surface water and that there was little or no mixing zone. We followed EPA's Office of Water guidance for determining the design flows for rivers as regards water quality criteria. The appropriate design flow depends on the particular water quality impact being evaluated. For assessing potential impacts on aquatic life, we used the ''7Q10'' as the design flow. The 7Q10 is the seven day low flow with a return frequency of once every 10 years and is the recommended design flow for use with chronic water quality criteria for the protection of aquatic life. We believe that chronic water quality criteria are the appropriate criteria for evaluating the potential impact of continuing steady releases, such as those that would result from subsurface discharge of contaminated ground water. On the other hand, EPA generally uses the ''30Q5'' as the design flow for assessing potential impacts on human health. The 30Q5 is the thirty day low flow with a return frequency of once every 5 years and is the recommended design flow for use with water quality criteria for the protection of human health as regards non-cancer effects. However, a 30Q5 design flow was not available in all cases. In these instances, we estimated the 30Q5 based on the 7Q10 design flow.[22] For carcinogens (*e.g.,* arsenic), lifetime exposures are the primary concern and a design flow that corresponds to a longer averaging time is appropriate. For this reason, EPA recommends the long-term harmonic mean be used as the design flow.[23] The harmonic mean is always less than the arithmetic mean and is used in place of it because low flow conditions drive long-term average water quality. However, because this flow statistic was not available, we estimated the harmonic mean flow from the arithmetic mean flow and the 7Q10.

As a result of the screening level analysis, all wastes screened out for which the ground water to surface water pathway was a concern. Therefore, no additional analysis of this pathway was conducted.

6. What Are the Limitations and Uncertainties of the Assessment?

Our assessment of exposures and risks is subject to a variety of limitations and uncertainties. These are discussed in some detail in the background document for today's proposed rule. A number of these are highlighted here.

We assumed our sampling and analysis data are fully representative of the range of wastes generated in the effected industries. However, our own data show that there are significant variations in waste concentrations across facilities in a given industry. Variability in waste concentration that is unaccounted for could lead to an over- or under-estimation of risks. However, any tendency toward under-estimation is likely to be mitigated to some extent by our selection of wastes and exposure scenarios that are intended to capture the highest risks.

We also assumed that our methods for measuring the leaching behavior of wastes (*i.e.,* the TCLP and SPLP test procedures) are both representative of the range of leaching conditions that exist under real world conditions and accurately quantify the concentrations of contaminants that leach into the subsurface environment from a given waste management unit. However, we know that many metals exhibit varying (or amphoteric) behavior with respect to pH and that any one test procedure is capable of characterizing leaching behavior only under a particular set of conditions.

The ground water model we used in our analysis (*i.e.,* EPACMTP) is designed to characterize dilution and attenuation in the subsurface environment under homogeneous conditions. The model does not account for subsurface heterogeneities, nor does it account for fractured flow or colloidal transport. These conditions, if present at

[21] Industrial wastewater discharges that are regulated under the National Pollutant Discharge Elimination System (NPDES) Permit Program are specifically excluded from regulation as hazardous wastes under 40 CFR 261.4(a)(2).

[22] EPA guidance provides a simple rule of thumb for estimating the 30Q5 from the 7Q10 depending on the size of the river. For smaller rivers (defined as those with a low flow of 50 cfs or less), the 30Q5 is 1.1 times the 7Q10. For larger rivers (low flow of 600 cfs or greater), the 30Q5 is 1.4 times the 7Q10. See ''Technical Support Document for Water Quality-Based Toxics Control,'' EPA/505/2–90–001, March 1991.

[23] The harmonic mean is defind as the inverse of the average of the sum of the inverses of the recorded flows.

a site, can lead to less dilution and attenuation of contaminant levels than predicted by the model, causing ground water concentrations to be under estimated. In addition, sorption of metal species onto soil and aquifer materials exhibits considerable variability depending on geochemical conditions and the total concentration of the metal present at a given location. Although our use of empirically derived Kd values captures some of this variability, the available published data are fairly limited for certain metals (*e.g.*, antimony). We have accounted for the uncertainty associated with the small number of data points explicitly for these metals by expanding the range of Kd values used for modeling (to three orders of magnitude). Even for metals that have abundant data (e.g., arsenic), it is unlikely that the range of variability apparent in the data could exist at a given site.

Uncertainty associated with the specification of Kd as noted above could lead to an over- or under-estimation of risk. However, a tendency toward over-estimation is likely to be mitigated by the fact that under near steady-state conditions (when ground water impacts are the greatest), concentrations in ground water are little influenced by Kd. Under non-steady conditions, any tendency toward over- or under-estimation is limited by the variability inherent in the empirical distributions of Kd used in the analysis, which include both relatively high and relatively low values of Kd. Nevertheless, in general the risk estimates are sensitive to the specification of Kd and, therefore, this is an important source of uncertainty in our analysis.

As indicated previously, for wastes managed on-site we based our assessment of human exposures on the plausibility of ground water being used for drinking water. While some information was available on utilization of ground water for drinking water, very limited information was available from which to determine the location of exposure at a given site. For wastes managed off-site we assumed that ground water is used for drinking water (or will be in the future) and we used national data on the distribution of distances to residential wells to assess human exposures and risk. Our analysis did not consider possible changes in the location of on-site waste management operations in the future. These exposure assumptions (about which there is considerable uncertainty) may have an impact on the estimated risks and, therefore, the outcome of the risk assessment.

Other important uncertainties include those related to the health effects of chemical contaminants in humans (hazard identification), absorption and metabolism of ingested contaminates (pharmacokinetics), and biological response (dose-response relationships). These and other limitations and uncertainties are discussed in the background document, ''*Risk Assessment for the Listing Determinations for Inorganic Chemical Manufacturing Wastes*'' (August, 2000).

F. Sector-Specific Listing Determination Rationales

We seek comments on all proposed listing decisions in this section, and the underlying rationales used to support our proposals.

1. Antimony Oxide

a. Summary. We have evaluated antimony oxide production wastes and propose to list two wastes from this process as hazardous: (1) Baghouse filters and (2) slag that is disposed of or speculatively accumulated. We propose to list the baghouse filter waste under the criterion in 40 CFR 261.11(a)(1) because it routinely exhibits one or more of the characteristics of hazardous waste, but the waste is not consistently managed in compliance with Subtitle C regulations. We propose to list the slag under the criteria in 40 CFR 261.11(a)(3) because of risks associated with land disposal.

K176 Baghouse filters from the production of antimony oxide. (E)

K177 Slag from the production of antimony oxide that is disposed of or speculatively accumulated (T).

Other wastes generated by the antimony oxide industry do not meet the criteria set out at 40 CFR 261.11(a)(3) for listing a waste as hazardous. They do not pose a substantial present or potential threat to human health or the environment. We identified no risks of concern associated with the current management of these other wastes.

b. Description of the antimony oxide industry. Antimony oxide was produced by four facilities in the United States in 1998. Antimony oxide is used as a flame retardant in plastics and textiles, a smoke suppressant, a stabilizer for plastics, an opacifier in glass, ceramics and vitreous enamels, and a coating for titanium dioxide pigments and chromate pigment.

The manufacturers use two different processes to produce antimony oxide. In the first process, antimony metal is roasted in the presence of air. The antimony oxide forms as a fume, cools and condenses in a baghouse. In the second process, crude (low grade) antimony oxide is roasted in the presence of air to produce higher grade antimony oxide. The antimony oxide cools and condenses in a baghouse. The crude antimony oxide comes either from off-site or is recycled from within the facility.

c. How does the Bevill Exclusion apply to wastes from the antimony oxide manufacturing processes? Antimony oxide producers use a range of raw materials to produce antimony oxide, including antimony metal ingots, sodium antimonate, and antimony ore concentrate, and some facilities have claimed that wastes generated from the production of antimony oxide are Bevill exempt. Wastes generated from processes using either antimony ingots or sodium antimonate (both of which are saleable mineral products) are considered chemical manufacturing wastes rather than mineral processing wastes and are not eligible for the Bevill exemption. The September 1, 1989 Bevill final rule states at 54 FR 36620–21 that chemical manufacturing begins if there is any further processing of mineral product.

Two of the facilities also purchase an antimony ore concentrate as a raw material and place this material in kilns to produce antimony oxide. The smelting of a ore concentrate above the fusion point is defined as mineral processing (See 54 FR 36618). At these antimony oxide facilities, since mineral processing has begun, wastes from the process are not eligible for the Bevill exemption as beneficiation wastes (See 40 CFR 261.4(b)(7)(i)). In addition, although there is a Bevill exemption for 20 specific mineral processing wastes form various mineral processing sectors, the wastes generated from antimony oxide mineral processing are not included as one of these 20 wastes and are not excluded. (See 40 CFR 261.4(b)(7)(ii)). Thus there are no antimony oxide wastes that qualify for the Bevill exemption.

d. Wastes generated by these processes. Table III–1 summarizes our information about the wastes generated from the production of antimony oxide:

TABLE III–1.—ANTIMONY OXIDE PRODUCTION WASTES

Waste category	Number of reported generators	1998 volume (MT)	Reported waste hazard codes	Management practices
Antimony slag not recycled in process	3	113	D008	Sent to lead smelters for lead and/or antimony recovery; or on-site drum storage prior to future on-site land disposal.
Baghouse filters	4	9	No code reported	In-process antimony recovery; off-site antimony recovery; industrial Subtitle D landfill; or non-hazardous waste incinerator.
Empty supersacks	1	15	No code reported	Disposal in off-site Subtitle D landfill or recycled.

In addition to these wastes, there are other materials produced that are reused in the antimony oxide production process. Antimony oxide and antimony slag are captured at various points in the facility and reinserted into a furnace to produce antimony oxide, either on-site or off-site. Because these materials are managed prior to reuse in ways that present low potential for release, and because we evaluated process waste generated after the secondary materials are reinserted into the process, we do not believe that these secondary materials present significant risks.

e. Agency evaluation. (1) Antimony slag not recycled in antimony oxide process.

How Are These Wastes Currently Managed?

Three facilities produced antimony slag that is not recycled in the antimony oxide process. Two of these facilities send the slag to lead smelters. One of the two facilities reported its slag to be TC hazardous because of its lead content (D008). The third facility, however, has historically stored a portion of its slag on-site in drums, reporting that they plan to reclaim antimony when antimony prices are more favorable. Recent revisions to the facility's Operating Permit,[24] however, require that the slag be placed in an on-site engineered ''slag storage pit'' to be constructed in the next two to three years.

We assessed the on-site disposal scenario, reflecting the projected management practice for this waste. For a number of years, the facility has been placing approximately 20 MT/yr in steel drums on pallets on the ground. The facility reported that they intend to reclaim the antimony from this slag when antimony prices are favorable. We consider storage on-site for more than one year to be speculative accumulation and consider these materials to be solid wastes. We believe that the length of time secondary materials are accumulated before being recycled is an important indicator of whether or not they are wastes. This is supported by the large number of recycling damage cases where secondary materials that were overaccumulated over time caused extensive harm. (See 50 FR 614) ''Under RCRA and the implementing regulations, permanent placement of hazardous waste, including perpetual ''storage'' falls into the regulatory category of land disposal.''[25] (See also *American Petroleum Institute* v. *EPA,* 216 F. 3d 50 (D.C. Cir. 2000).) Since the Operating Permit requires the facility to build and use an on-site, land-based unit for this waste, we assessed the on-site landfill scenario for this waste.

How Was This Waste Category Characterized?

We selected two of the three facilities for sampling and analysis. At the site which stores the slag indefinitely, we collected one sample of ''reduction furnace slag'' that was designated as containing less than 5 percent antimony (AC–1–AO–01) and one sample of ''reduction furnace slag'' that was designated as containing between 5 and 10 percent antimony (AC–1–AO–06). Based on characterization information provided by the facility in its RCRA Section 3007 Survey response, we believe these samples are representative of all of the slags generated at the facility. We conducted total, TCLP and SPLP analyses of these slags. The analytical results for the constituents found to be present in the leachates at levels exceeding the HBLs are presented in Table III–2.

We collected a third sample (LI–1–AO–01) at a facility that reclaims its slag for lead. This sample failed the TC for lead, as the facility reported in its RCRA Section 3007 Survey response. The results are available in ''Waste Characterization Report, Laurel Industries Inc., La Porte, Texas'' in the docket for today's proposal.

TABLE III–2.—CHARACTERIZATION OF SPECULATIVELY ACCUMULATED ANTIMONY SLAG

Constituent of concern	AC–1–AC–01			AC–1–AO–06			HBL mg/L
	Total mg/kg	TCLP mg/L	SPLP mg/L	Total mg/kg	TCLP mg/L	SPLP mg/L	
Antimony	11,500	55.8	114	127,000	110	211	0.006
Arsenic	301	2.0	2.9	478	3.1	3.8	0.0007
Boron	<500	9.8	9.3	<2,500	8.5	8.1	1.4
Selenium	<50	0.6	0.6	<250	0.6	0.3	0.08
Vanadium	<50	1.3	1.1	<250	0.6	1.0	0.14

[24] ''United States Antimony Corp. Stibnite Hill Mine Project Operating Permit 00045'', 6th review draft, January 1999. This draft permit is issued under the Metal Mine Reclamation Act, 82–4–301 MCA. It was prepared by the facility, approved by the State of Montana on August 12, 1999 (with a number of stipulations), and subsequently approved by the Forest Service.

[25] ''Above Ground Land Emplacement Facilities, N.J. Law,'' Letter to Honorable James J. Florio, Chairman, Subcommittee on Commerce, Transportation, and Tourism, Committee on Energy and Commerce, House of Representatives, from J. Winston Porter, Administrator, EPA, dated March 26, 1986.

How Was the Groundwater Ingestion Risk Assessment Established?

We modeled the annual volume reported to be stored on-site indefinitely (20 MT). (The facility reports that it processes sodium antimonate from two facilities and returns the resultant slag to the process for further processing. We did not include these recycled slag volumes in our modeling.)

We used the total and SPLP results as model inputs, reflecting the industrial nature of the on-site unit. We used only the analytical results for the facility that stores the slag indefinitely. Both of the samples for this facility are relevant because they represent the material stored on-site and destined for the on-site slag pit. We did not model the sample from the other sampled facility because they acknowledged that their waste exhibited the TC. Both this facility and the facility that was not sampled reclaim these wastes in a manner that is excluded from regulation under Subtitle C. We believe that it is reasonable to assume that they will continue to manage their slags in ways that do not violate Subtitle C regulations. Also, in this case, the SPLP results are higher than the TCLP results, making the industrial landfill the worst case scenario.

We examined records available from the State where the slag is stored to determine the appropriate distance-to-well to model. We identified four residential wells within several miles of the facility. These data demonstrate that groundwater is a viable and actively used resource in this area. One well is located 1.4 miles directly downgradient. Based on local topography and groundwater information, we do not believe the other identified wells could be affected by releases to groundwater from the facility. We modeled potential releases to a downgradient residential well. Given that our groundwater model is not configured at this time to model releases further than one mile, we did not assess the full distance to the known well. In our probabilistic analysis, we varied the well distance from the closest property boundary that appeared to be potentially downgradient to the limit of the model (one mile). Our results therefore are conservative with respect to this particular well, but otherwise reflect the fact that future residences and wells may be placed closer to the facility and any potential groundwater plumes associated with its operation. Specifically, we modeled potential distances to wells from the facility's southern boundary to one mile.

We used a regional site-based approach in modeling this unit, as described in section III.E.4. We modified this to enable us to use available depth to groundwater information at this particular site.

What Is EPA's Listing Rationale for This Waste?

Where these slags are reused and present no exposure route of concern, we did not evaluate these secondary materials further.

The results of the risk assessment for the on-site disposal scenario for boron, selenium, and vanadium were very low. In the 90th to the 95th percentile range, the highest hazard quotient for these three constituents was in the range of 0.001. For this reason, the full results for these three constituents are not presented here. The results of the risk assessment for the on-site disposal scenario for antimony and arsenic are presented in Table III–3:

TABLE III–3.—PROBABILISTIC RISK ASSESSMENT RESULTS FOR SPECULATIVELY ACCUMULATED ANTIMONY SLAG

Percentile	Adult risk	Child risk	Adult risk	Child risk
	[1]Antimony hazard quotient		[1]Arsenic—cancer risk	
90th%	2.2	4.6	4 E–07	3 E–07
95th%	4.5	9.4	1 E–06	9 E–07

For a more complete description of this analysis, see ''Risk Assessment for the Listing Determinations for Inorganic Chemical Manufacturing Wastes'' (August 2000) in the docket for today's proposal.

In our modeling results, the dilution and attenuation factors (DAFs) were relatively high. For example, high end antimony DAFs were as high as 8,000. This is the result of the hydrogeological setting of the site evaluated. Due to the high hydraulic conductivity we used in modeling, the landfill leachate is readily diluted into a large volume of groundwater. Given the uncertainty about the actual ultimate management practice and the site-specific nature of the modeling, DAFs could be considerably lower in other disposal scenarios, resulting in much higher hazard quotients and, therefore, higher potential risks.

Our modeling approach assumes that the slag will be placed in an unlined unit. Information from the facility, however, indicates that they plan to place the waste in an on-site lined storage pit, upon completion of construction, that will be governed by a state mining permit. We considered whether our decisionmaking should account for the added protection provided by a liner system. Our first consideration is the current uncertainty regarding this waste's disposition. While the facility has stated its intended placement of this waste in a lined unit, our most recent information indicates that construction had not yet begun. The facility may in fact choose to place this waste in an off-site commercial landfill that would not necessarily be lined. This uncertainty is greater than in most waste management scenarios that we have assessed in this rulemaking, where there is a long term history of management in a particular type of management unit (*e.g.*, an operating on-site landfill, a local off-site landfill). Because of this uncertainty, we are hesitant to give much weight to a liner system that may be constructed in the future.

More generally, we considered the efficacy of landfills (and any liners) over the modeled risk assessment period, which covers 10,000 years. Landfills are used actively until their capacity is reached (our models assume an active life of 30 years), and at the end of their active life, we assume landfills are closed and the wastes remain in the unit indefinitely. The effectiveness of liner systems depends on how they are designed. Composite and double liners that combine two or more layers of liner material with leachate collection and leak detection will no doubt minimize leakage to the subsurface during the period when the leachate collection system is actively managed. However, depending on the regulatory controls relevant for a particular unit, monitoring would continue for a limited post-closure period. There is also uncertainty associated with liner performance, in the near term as well as in the long term. There are a variety of factors that may influence longevity and performance, such as poor construction, installation

or facility operation, or geologic movement below the liner that can cause holes, tears or larger failures. Some defects may have a significant effect. Because of our uncertainty regarding the efficacy of the liner system over long periods of time, and the uncertainty over the ultimate disposal for this waste, we believe our use of the modeling results for an unlined landfill is appropriate.

In deciding whether to list this waste as hazardous, we also considered other factors in addition to the risk results noted above. First, we considered the very high levels of toxic constituents present in the waste and in test leachate (which is one of the criterion cited in 261.11(a)(3)(ii)). The levels of antimony and arsenic are quite high. The antimony level exceeds 10% in the waste (up to 127,000 mg/kg), and the SPLP antimony concentration exceeds the drinking water HBL by a factor of >35,000. Another key factor is the lack of any appreciable degradation expected for these metals (a constituent's degradation or persistence is also a criterion for listing given in 261.11(a)(3)). Unlike some organic compounds, metals such as antimony will not degrade over time. Thus, even if the loss in effectiveness of a liner system only occurs over the very long term, the metals would still be present for leaching. It is difficult to assess the impact of the long-term effectiveness of the liner system in question for today's proposal. However, we note that the effectiveness of the liner system would have to be sufficient to reduce the antimony concentration at the well by close to 90% in order to keep the risks below an HQ of 1.

Therefore, given the reasons cited above, we propose to list these slags as hazardous:

K177 Slag from the production of antimony oxide that is disposed of or speculatively accumulated.

It is important to note that this listing has been developed to capture only those wastes that are not recycled. Thus, this listing, as proposed, would not apply to generators that recycle or reclaim this material as long as it is not speculatively accumulated. If slags have been speculatively accumulated (*i.e.,* held for more than a calendar year without recycling) at the time of the effective date of this final rule, these slags would meet the listing immediately.[26]

We also propose to add antimony to Appendix VII to Part 261, which designates the hazardous constituents for which K177 would be listed.

(2) Baghouse filters.

How Are These Wastes Currently Managed?

These filters capture product or off-specification product. Two facilities place antimony laden baghouse filters in their on-site production furnaces. One of these facilities also sends a portion of its baghouse filters to Mexico for antimony recovery. Two other facilities dispose of these wastes in a non-hazardous waste incinerator and an industrial Subtitle D landfill. None of these wastes are handled as hazardous, although our sampling efforts showed this waste to exhibit the toxicity characteristic for lead and arsenic.

How Was This Waste Category Characterized?

We collected a total of three samples of this waste category from two facilities. At one facility we collected one sample of the ''oxidation furnace'' baghouse filters (AC–1–AO–03) and one sample of the ''reduction furnace'' baghouse filters (AC–1–AO–07). At the other facility, we collected a sample of the baghouse associated with its kiln (LI–1–AO–03). Because the facilities sampled represented the range of production practices within the industry, we believe these samples are representative of all of the baghouse filters generated by this industry. We conducted total, TCLP and SPLP analyses of these baghouse filters. The analytical results for the constituents found to be present in the leachates at levels exceeding the HBLs are presented in Table III–4. Two of the three samples of the waste, one from each facility that generate this waste, exceed the toxicity characteristic for either lead or arsenic. (The third sample exhibits TCLP lead levels close to the TC standard).

TABLE III–4.—CHARACTERIZATION OF BAGHOUSE FILTERS FROM ANTIMONY OXIDE PRODUCTION (MG/KG OR MG/L)

Constituent of Concern	LI–1–AO–03			AC–1–AC–03			AC–1–AO–07			HBL	TC
	Total	TCLP	SPLP	Total	TCLP	SPLP	Total	TCLP	SPLP		Limit
Antimony	91,400	9.3	6.2	150,000	9.9	4.3	145,000	68.7	287	0.006	.....
Arsenic	114	<0.5	0.6	<250	<0.5	0.09	<250	[1] 6.9	6.9	0.0007	5.0
Boron	24.0	6.5	1.0	<2500	<2	0.2	<2500	<2	0.7	1.4	.....
Cadmium	5.3	0.3	0.5	<250	0.3	0.3	411	<0.05	0.9	0.0078	1.0
Lead	3.1	[1] 8.5	16.9	<2500	2.8	1.0	<250	<0.5	<0.05	0.015	5.0
Mercury	0.9	<0.002	0.001	0.1	<0.002	<0.0002	95.2	0.03	0.4	0.0047	0.2
Thallium	<2	<2	0.06	<1000	<2	0.06	<1000	<2	0.1	0.0013	.....

[1] Exceeds Toxicity Characteristic level.

What Is EPA's Listing Rationale for This Waste?

We propose to list the baghouse filters waste because our data show it routinely exhibits one or more of the characteristics of hazardous waste (*i.e.,* TC lead or arsenic), yet the generators do not identify their wastes as exhibiting the toxicity characteristic and the generators that dispose of this waste do not comply with Subtitle C regulations. We propose to list this waste under the 261.11(a)(1) criteria:

K176 Baghouse filters from the production of antimony oxide (E).

Because we believe we have sufficient reason to list this waste under 261.11(a)(1) based on the TC exceedences and lack of compliance with hazardous waste regulation, we chose to conserve our time and resources and did not conduct formal risk assessment modeling of the off-site landfill scenario, as we would traditionally do to support a 261.11(a)(3) listing. Such modeling would reflect reported management practices. Antimony is not a TC constituent and, therefore, was not considered in the 261.11(a)(1) listing decision. However, antimony levels are high and would likely result in risk if modeled. Leach results for the waste exceed the HBLs by

[26] A material is not accumulatively speculatively, however, if the person accumulating it can show that the material is potentially recyclable and has a feasible means of being recycled and that—during the calendar year (commencing on January 1)—the amount of material that is recycled or transferred to a different site for recycling equals at least 75 percent by weight or volume of the amount of that material accumulated at the beginning of the period. (40 CFR 261.1(c)(8))

a wide margin, *e.g.,* the SPLP results for antimony are up to 48,000 times the HBL. The high levels of antimony in the waste (up to 15%) would provide a long-term source of the metal for leaching into the groundwater. Thus, we expect that modeling an off-site Subtitle D scenario would yield significant drinking water risk.

Note that, when facilities process the antimony oxide product captured in these filters by reinserting the product-containing filters back into the furnace where the antimony oxide originated, without reclamation, these materials would not be solid wastes.[27]

We also propose to add arsenic and lead to Appendix VII to Part 261, which designates the hazardous constituents for which K176 would be listed.

The ''mixture'' rule for listed wastes currently provides an exemption for wastes listed solely because they exhibit characteristics (see 40 CFR 261.3(a)(2)(iii)). Mixtures of such listed wastes lose their listed waste status when they cease to exhibit characteristics for which they were listed. (However, they would still need to comply with Land Disposal Restriction requirements.) In the both of the last two Hazardous Waste Identification Rule (HWIR) proposals (60 FR 66344, December 21, 1995) and (64 FR 63382, November 19, 1999), we proposed to narrow the exemption to only include wastes listed for ignitability, corrosivity, and reactivity.

This narrowing would make any waste listed for the toxicity characteristic (TC) (including the waste proposed today for listing under the (a)(1) criteria) ineligible for the current exemption. In other words, under current mixture rule regulations, mixtures containing these baghouse filters would become nonhazardous wastes once they ceased exhibiting the characteristic. Under the HWIR proposal, however, such mixtures would remain hazardous wastes even after they cease to exhibit the TC. As we state in the TC rule, chemicals can still pose hazardous at levels below the TC (see 55 FR 11799, March 29, 1990). Under an amended consent decree (*Environmental Technology Council* v. *Browner, C.A.* No. 94–2119 (TFH), April 11, 1997), EPA is required to sign a notice taking final action with respect to the proposed revisions to the mixture rule by April 30, 2001.

(3) Empty supersacks. One facility ships crude antimony oxide in supersacks and then reuses them to store intermediate materials until they wear out. The facility then sends these empty supersacks either to an off-site industrial Subtitle D landfill or to an off-site plastic recycler. The facility claims that the supersacks are empty and would meet the standard in 40 CFR 261.7 (which exempts ''empty'' containers formerly used to manage hazardous waste). Although 40 CFR 261.7 does not literally apply to these sacks, we think it is reasonable to take a similar approach here. We believe that the levels of crude antimony oxide in worn-out supersacks would be low because the material is the primary feedstock (raw material) used in this process. We do not believe it follows that these supersacks should be regulated, when other similarly empty containers would be exempt. Therefore, we propose not to list this waste as hazardous.

2. Barium Carbonate

a. Summary. We have evaluated the wastes, waste management practices, and potential risk exposure pathways associated with the barium carbonate production processes and propose not to list any wastes from this industry as hazardous under Subtitle C of RCRA. Some wastes in this industry are D002 or D005 characteristic hazardous wastes, which are both currently subject to RCRA Subtitle C regulation and managed in compliance with those regulations. For other wastes, not identified as characteristic hazardous wastes, we have identified no risks of concern associated with the current management of these wastes that would warrant listing. These wastes do not meet the criteria listed under 40 CFR 261.11(a)(3) for listing a waste as hazardous.

b. How is barium carbonate produced? There are two facilities in the United States that produce significant quantities of barium carbonate. A Georgia facility produces barium carbonate for commercial sale. A Pennsylvania facility produces barium carbonate only for use as a feedstock in its own internal manufacturing processes. A third facility is a specialty manufacturer that produces extremely small amounts of barium carbonate (approximately 10 kg in 1998).[28] For more detailed information concerning this industry, see ''Barium Carbonate Listing Background Document for the Inorganic Chemical Listing Determination'' in the docket for today's proposal.

Barium carbonate ($BaCO_3$) has a wide range of uses, including feedstock for production of other barium chemicals, an additive in various glasses, ceramics, bricks, and other construction materials, an additive in oil-drilling suspensions, and a brine purification chemical in the chlor-alkali industry.

The two primary barium carbonate production facilities use different manufacturing processes to make barium carbonate. The Georgia facility uses locally mined barite ore, containing barium in the form of barium sulfate, as the primary feedstock. The ore is crushed and milled, thermally reduced in a roasting kiln, and leached with water to dissolve the barium. The resulting barium sulfide solution is filtered and reacted with carbon dioxide gas to produce a barium carbonate precipitate. This precipitate is then dried, and sized for sale.

The Pennsylvania facility uses a commercially purchased high purity barium chloride solid as the primary feedstock. The facility dissolves the barium chloride in water, heats and filters the resulting solution, and precipitates barium carbonate by reacting the barium chloride solution with ammonium bicarbonate. The resulting barium carbonate precipitate is washed, filtered, dried and sized before the facility utilizes it as a feedstock in other manufacturing processes on-site.

c. What wastes are generated? Table III–5 below briefly lists the facility-reported residuals from the barium carbonate manufacturing processes, residual volumes generated in 1998, reported RCRA hazard codes, and residual management practices.

[27] As noted above, these filters capture product materials. EPA does not regulate reclamation of these products. See 50 FR 14216, April 11, 1985: ''Under the final rules, commercial chemical products and intermediates, off-specification variants, spill residues, and container residues listed in 40 CFR 261.33 are not considered solid wastes when recycled except when they are recycled in ways that differ from their normal use—namely, when they are burned for energy recovery or used to produce a fuel''

[28] Since, as explained below, we find no significant risks from the larger volume wastes we assessed, we conclude that any low volume wastes from this third facility also would not pose any risks warranting listing.

TABLE III–5.—BARIUM CARBONATE PRODUCTION WASTES

Waste category	1998 volume (MT)	Reported RCRA hazard codes	Sequential residual management practices
Barite Ore Feedstock Process—Georgia Facility			
Treated barium wastes (D005 barium wastes include barite ore leaching waste, barium sulfide filtration sludge, and barium carbonate production area cleaning and maintenance wastes).	18,300	None (D005 prior to treatment).	Disposal in local, captive, industrial Subtitle D landfill (after treatment of D005 wastes in on-site Subtitle C treatment unit).
Wastewater from $BaCO^3$ precipitate dewatering	313,000	None	Treatment in on-site, tank-based WWTP prior to NPDES discharge to Etowah River.
WWTP sludge	11,000	None	(1) Dewatered; (2) Treated on-site; (3) Disposal in local, captive, industrial Subtitle D landfill.
Spent polypropylene and nylon filter media and baghouse dust collector bags.	3 (filter media) ~1.5 (baghouse bags).	None	(1) Washed and washwaters re-inserted to barium carbonate production process. Solids managed as barium carbonate production area cleaning and maintenance wastes. (2) Treated materials disposed in off-site municipal Subtitle D landfill.
High Purity Barium Chloride Feedstock Process—Pennsylvania Facility			
Ammonia vapor scrubber water and ammonia reclamation unit wastewaters.	Not reported	D002	Treatment in on-site, tank-based WWTP.
Barium carbonate precipitate washwater	1,600	None	Treatment in on-site, tank-based WWTP prior to NPDES discharge to Susquehanna River.
WWTP sludge	8,200	None	(1) Stored in roll-off bin; (2) Disposal in off-site municipal Subtitle D landfill.
Ammoniated spent process solution storage tank solids.	1	None	Disposal in off-site municipal Subtitle D landfill.
Sludge and spent filter media from filtration of barium chloride solution and $BaCO_3$ drying and sizing unit dusts.	<1.23	D005	(1) Stored in closed container; (2) Sent to off-site Subtitle C facility for treatment and disposal.

In addition to these wastes, the two barium carbonate manufacturing facilities also produce other materials which are either piped directly back to the production process or are used for other purposes. Residues from the barite ore feedstock production process, ore crusher/grinder, kiln, barium carbonate drier, granulation and packaging processes are directly returned to their unit of origin with no significant pathways for exposure of these materials to the environment prior to reuse. Barium carbonate production area cleaning and maintenance wastewaters are also re-inserted to the barium carbonate production process with no significant pathways for exposure of these materials to the environment prior to reuse. Because these materials are managed prior to reuse in ways that present low potential for release, and because we evaluated all wastes generated after they are reinserted into the process, we do not believe that these secondary materials present significant threats.

The barite ore feedstock facility also produces molten sulfur or sodium hyposulfate from hydrogen sulfide gas piped from the barium carbonate manufacturing process. Because the material is a gas from a production unit, rather than from a waste management unit, and is conveyed to its destination through piping, the gas is not a solid waste. RCRA Section 1004(27) excludes non-contained gases from the definition of solid waste, and therefore they cannot be considered a hazardous waste (see 54 FR 50973).

The facility using barium chloride as its feedstock reclaims ammonia in the form of ammonium hydroxide from barium carbonate production wastes and uses this material throughout the facility as a feedstock and reagent. Spent ammoniated process solution is piped from the process unit where it forms to a storage tank where it is commingled with ammoniated spent process solutions from several other on-site manufacturing processes. The ammoniated spent process solutions from these other manufacturing processes are beyond the scope of this listing determination. From the storage tank, the facility pipes the commingled ammoniated spent process solutions to an ammonia reclamation unit which reclaims the ammonia in the form of ammonium hydroxide. Ammonium hydroxide is used on-site in various manufacturing processes, including the production of ammonium bicarbonate solution for use in the barium carbonate production process. Because the spent solution is piped to the reclamation unit with no significant potential for exposure to the environment, we did not evaluate the solution further.

Both facilities produce barium carbonate from a saleable mineral product.[29] Under the Bevill exemption (54 FR 36620–21), chemical manufacturing begins if there is any further processing of a saleable mineral product. Since these facilities use saleable mineral products as feedstock, their processes are chemical manufacturing, and are not classified as mineral processing. Therefore none of the wastestreams generated by these facilities during the production of barium carbonate are Bevill exempt.

See the ''Barium Carbonate Listing Background Document for the Inorganic Chemical Listing Determination'' for more details on these residuals.

[29] Note that primary barite ore has wide use in drilling muds for the petroleum industry and numerous other industrial uses, including use as feedstock for barium chemicals; see ''Barite'' U.S. Geological Survey—Minerals Information, 1997, http://minerals.usgs.gov/minerals/pubs/commodity/barite/index.htm.

d. *Waste characterization and Agency evaluation.* Barium is the primary constituent of potential concern in the wastes from both facilities. Barium occurs in several production wastes at high levels, in some cases exceeding the TC level (100 mg/L) in TCLP leachate samples. These TC wastes are coded and treated as hazardous (D005). The Georgia facility holds a hazardous waste treatment permit to allow on-site stabilization of barium, and the Pennsylvania facility sends all of their D005 wastes off-site for treatment and disposal at a hazardous waste treatment and disposal facility.

We decided not to do characterization sampling for wastes from either facility because both facilities submitted information to us on the nature of their wastes. We also received some additional analytical data from the State of Georgia for the Georgia facility. These data provided information on the concentrations (or absence) of the metal constituents of potential concern in the wastes and in test leachates from the wastes. We believe the available information is sufficient to adequately characterize the wastes and to allow us to evaluate their risk potential for the purposes of a listing decision. ''Barium Carbonate Listing Background Document for the Inorganic Chemical Listing Determination'' summarizes the analytical data and other information available for these wastes.

We propose not to list any of the wastes from the barium carbonate manufacturing industry. Many wastes from this industry are characteristically hazardous and managed as hazardous wastes either on-site or at permitted Subtitle C treatment facilities off-site. Other wastes did not exhibit constituents at levels of concern for purposes of a listing given the nature of their management and disposal.

Several groups of wastes from each of the facilities are disposed of in a treated form, rather than an as-generated form. In general, therefore, we focused our evaluation on the treated form of the wastes.

The paragraphs below describe how the wastes are generated and managed for the two processes and our rationale for proposing not to list the wastes. We solicit comments on the proposed listing decisions described below.

(1) Wastes from the production of barium carbonate from barite ore feedstock. (a) Treated barium wastes. The waste category, ''treated barium wastes,'' is the treatment residue from the commingling and treatment of several barium wastes in an on-site hazardous waste treatment unit. The barium wastes, which are consistently characteristically hazardous for barium (D005) before treatment (or are consistently assumed by the facility to be D005 wastes), include:

—Barite ore leaching waste, which is solids from the filtration of the liquid product stream from the barite ore roasting and leaching units,
—Barium sulfide sludge, which is from polishing filtration of liquid barium sulfide, and,
—Wastes from cleaning and maintenance of the barium carbonate production area.

A RCRA Subtitle C hazardous waste treatment facility permit governs the on-site treatment process for these barium wastes. The three wastes are sent directly to the treatment unit, or they are stored prior to treatment for short time periods in Subtitle C closed containers. The treatment process is a stabilization process for barium using gypsum (primarily calcium sulfate) to precipitate soluble barium as less soluble barium sulfate. According to RCRA Subtitle C regulations, the treated barium waste must meet the LDR UTS. Treatment takes place in concrete mixer-type trucks. Once treatment is complete, the treatment trucks immediately transport the waste to the facility's captive Subtitle D landfill for disposal, located approximately 2 miles from the production facility on facility-owned property.

State and facility information indicate that the treated barium wastes no longer exceed the TC level for barium (100 mg/L from TCLP analysis) and typically leach less than 1 mg/L barium, according to both SPLP and TCLP analyses. In addition, according to data the facility and the state of Georgia submitted to EPA from sampling events conducted during the past two years at the facility, the waste meets the LDR UTS for all regulated constituents.

The treated barium wastes are disposed of in the landfill without daily cover. However, the waste has a relatively high moisture content (approximately 50%) when placed in the landfill and, according to the facility, hardens over time and does not create dust. In addition, the waste does not contain any known volatile constituents of concern.

To assess the potential for groundwater releases from the captive, industrial landfill, we compared the SPLP leaching data from the facility and the state of Georgia to existing HBLs for ingestion of groundwater. SPLP data are appropriate for evaluating this waste because it is placed in a Subtitle D industrial landfill. We did not find any constituents in the available SPLP data that exceeded the health-based levels by more than a factor of 2 (see section III.E.3 for a discussion of this risk-screening criterion). See the ''Barium Carbonate Listing Background Document for the Inorganic Chemical Listing Determination'' for further details on the available data.

In addition, we found only one exceedence of AWQC standards among the SPLP leaching data for treated barium wastes. Selenium was found at a level of 0.04–0.06 mg/L, which exceeds the AWQC standard (0.0050 mg/L) by a factor of 8 to 12. However, the landfill in which the treated barium wastes are placed is 1,700 feet from the nearest downgradient water body, the Etowah River, and also lies beyond the river's 100 year flood plain. In recent years, the Etowah River in the vicinity of the landfill has had a flow rate varying between 9.9 to 230 m^3 per second on a daily basis. Given the distance over which leachate from the treated barium wastes would need to travel before reaching the river, dilution and attenuation during transport in local groundwater, and further dilution in the Etowah River, we believe the levels of selenium in the leachate would decrease to a level which would no longer pose a risk to the environment.

We do not believe it is necessary to assess other management practices for the treated barium wastes. The facility has treated and disposed of their treatment residues in a similar manner for over 15 years. The production facility itself relies on a local source of barite ore, has operated from its current location since 1942 and is therefore not likely to change its location in the near future. The dedicated landfill has a remaining life of nearly 20 years and is located approximately 2 miles from the production facility. Given the dedicated nature of the landfill, its proximity to the production facility, and the significant remaining capacity, we believe it is unlikely that the Georgia facility will dispose of their wastes in any other unit in the near future. Thus there is no need to assess additional management scenarios for this wastestream.

Given the facility's Subtitle C waste treatment permit, we believe that the facility's untreated D005 wastes are adequately managed with respect to this rulemaking. In addition, we have found no potential for releases to air, groundwater, or surface water at levels of concern from the treated wastes. Therefore we propose not to list these wastes.

(b) Wastewater from barium carbonate precipitate dewatering. The facility filters barium carbonate precipitate from

residual process solutions and sends this filtrate to the facility's tank-based wastewater treatment plant (WWTP) for treatment. According to the facility's RCRA Section 3007 Survey response, the wastewater does not exceed the TC level for any constituent.

Wastewater from the barium carbonate production process commingle in the WWTP with wastewaters from other facility processes beyond the scope of this rulemaking and comprise approximately 17% of the total WWTP flow-through. The wastewater treatment is an oxidation process. Treatment of the wastewaters occurs in tanks equipped with secondary containment. Given the controlled manner in which the wastewater is managed in tanks, the lack of any volatile constituents of concern, and NPDES regulation of the WWTP effluent, we propose not to list this wastewater.

(c) Treated wastewater treatment plant sludge. The facility's WWTP generates a treatment sludge from the commingling and treatment of wastewaters discussed above in the preceding section. The resulting sludge is dewatered to 25% solids content in an uncovered tank. None of the information the facility provided on this waste indicates the presence of volatile constituents of concern.

The facility places the dewatered WWTP sludge directly from the WWTP unit into a treatment unit consisting of a concrete mixer-type truck containing gypsum (primarily calcium sulfate). The truck mixes the wastewater treatment sludge with the gypsum to convert soluble barium to a less soluble barium sulfate prior to transporting the waste to the facility's off-site, captive, Subtitle D landfill. We found low potential for releases from either the dewatering tank or the treatment unit. Analytical data from the state shows that the treatment process reduced leachable barium in the sludge, according to SPLP analysis, from 53 mg/L to 0.03 mg/L.

SPLP analytical data from the State also show no potential constituents of concern in treated WWTP sludge samples at concentrations above HBLs or above AWQCs. Therefore, this waste screened out from any further risk evaluation for groundwater or surface water. The SPLP data are appropriate for evaluating this waste because it is placed in a Subtitle D industrial landfill.

Similar to the treated barium wastes described above in section (a), the waste has a high moisture content when placed in the landfill and is reported by the facility to harden over time. Therefore, we do not believe this waste poses a significant risk through releases of airborne dust. In addition, the waste does not contain any known volatile constituents of concern.

We do not believe it is necessary to assess other management practices for this waste. The facility has treated and disposed of their wastewater treatment plant sludge in a similar manner for over 15 years. Given the dedicated nature of the landfill, its proximity to the production facility, and the significant remaining capacity, we believe it is unlikely that the facility will dispose of their wastes in any other facility in the foreseeable future.

Based on our knowledge of the current nature of the management of the treated wastewater treatment plant sludge and of the low level of constituents of concern it contains, including volatile constituents, we propose not to list the treated wastewater treatment plant sludge.

(d) Spent polypropylene and nylon filter media and baghouse dust collector bags. Baghouse dust collector bags and polypropylene and nylon filter media fabric at the Georgia facility deteriorate over time and must be replaced periodically. The facility washes the bags and filters with water and then soaks them in sulfate solution to stabilize any remaining barium. The facility then disposes of the bags and filter fabric in a local municipal Subtitle D landfill. Wastewaters from the washing of the filters and bags are returned to the production process. Solids from the washing of the filters and bags become part of the cleaning and maintenance wastes that are treated as discussed above in section (a).

The facility did not provide chemical composition analyses for these wastes. However, we do not expect either baghouse bags or nylon and polypropylene filter fabrics, which are used primarily for physical separation of solids from liquids in the barium carbonate production process, to contain notable levels of any potential constituent of concern besides barium. According to the facility, neither the bags nor the filters exceed the TC level for any constituent. In addition, the facility treats the materials to stabilize any remaining barium before disposing of them in a Subtitle D municipal solid waste landfill. The facility does not produce a large volume of these wastes; approximately 3 metric tons per year of filters and approximately 1.5 metric tons per year of baghouse bags. Because barium is not volatile, and because we do not expect the filter media and bags to contain any other volatile constituents, we do not believe these residuals pose any risk through airborne pathways.

Given the relatively small volume of these wastes, the inert nature of the filters and bags themselves, and the facility's washing and stabilization of barium prior to disposal, we believe these treated bag wastes do not warrant listing as hazardous wastes.

(2) Wastes from the production of barium carbonate from high purity barium chloride feedstock. (a) Barium carbonate production wastewaters and wastewater treatment plant sludge. The Pennsylvania facility commingles and treats wastewaters from several manufacturing processes at their facility in an on-site, tank-based WWTP. Wastewaters from the barium carbonate production process are piped directly to the WWTP and comprise less than 1% of total WWTP flow through; the remainder of the wastewaters entering the WWTP are from manufacturing processes not within the scope of this listing determination. Wastewaters from the barium carbonate production process include:

—Ammonia vapor scrubber waters and ammonia reclamation unit wastewater.
—Barium carbonate precipitate washwater.

A scrubber captures ammonia vapor from the mixing of ammonium bicarbonate solution with the barium chloride solution to precipitate barium carbonate. Water, sodium hydroxide, and emissions from other manufacturing processes in the facility mix with the ammonia vapor in the scrubber to produce this wastestream.

An ammonia reclamation unit recovers ammonia from ammoniated spent process solutions from multiple manufacturing processes, including the barium carbonate manufacturing process, in the form of 28% ammonium hydroxide solution. The unit also produces a wastewater. Approximately 1% of the total ammonia reclamation unit inflow derives from the barium carbonate production process. Therefore, a small percentage of the unit's wastewater derives from barium carbonate production.

The facility also produces a wastewater from the washing of barium carbonate precipitate with deionized water in order to remove any process solution remaining on the precipitate.

The only possible release route of concern from the tank-based system for the wastewaters would be through air releases. This pathway is highly unlikely for the nonvolatile metals that are the potential constituents of concern in these wastes. Given the controlled manner in which the wastewaters are managed and the regulation of the

treatment unit's discharge under the NPDES program, we propose not to list these wastewaters.

Treatment of the commingled wastewaters consists of neutralization followed by filtration. The treatment generates a sludge. According to the facility's RCRA Section 3007 Survey response, the sludge does not exceed the TC level for any constituent. The facility disposes of the sludge in a local Subtitle D municipal solid waste landfill. We do note the presence of some potential constituents of concern in the WWTP sludge. These constituents include vanadium, nickel, and antimony. However, we do not believe that these constituents derive from the barium carbonate manufacturing process.

Because the barium carbonate production process wastewaters contribute less than 1% of the total input to the on-site WWTP, any constituents in the barium carbonate production wastewaters sent to the WWTP also make a minimal contribution to the total level of constituents in the combined wastewater in the WWTP and the resulting sludge. In addition, the process uses high purity barium chloride dissolved in deionized water as its primary feedstock and reclaims much of the residual ammonia from its ammonium bicarbonate feedstock. Therefore, the likelihood that the constituents of concern in the sludge might arise from the barium carbonate production process is very low. Moreover, the facility has provided information to us indicating that the barium carbonate process is not the source of these potential constituents of concern and that they derive instead from on-site manufacturing processes beyond the scope of today's listing proposal (see ''Barium Carbonate Listing Background Document for the Inorganic Chemical Listing Determination'' for further details). Given the minimal potential for contribution of constituents of concern by the barium carbonate process wastewaters to the WWTP sludge, we propose not to list this sludge under this rulemaking effort.

(b) Ammoniated spent process solution storage tank solids. The facility pipes residual process solution containing ammonia directly from the barium carbonate precipitate settling unit to covered storage tanks prior to routing it through an on-site ammonia reclamation unit. The barium carbonate process wastewater is one of many ammoniated residual process solutions the facility routes to the storage tanks and constitutes approximately 1% of the unit's total input.

The ammoniated spent process solution storage tank accumulates solids which the facility removes and disposes of in a local Subtitle D municipal solid waste landfill on a yearly basis. The tank solids are a small volume waste of 1 MT/yr. According to analytical data provided by the facility, the solids do not exceed the TC level for any constituent, though they do contain vanadium, nickel, and antimony at levels of potential concern. However, as noted for the wastewater treatment plant sludge, the constituents of concern in the solids are unlikely to arise from the barium carbonate production process because the barium carbonate production process contributes only 1% of the total wastewaters in the storage tanks. In addition, information the facility provided indicates that the nickel, vanadium and antimony found in the sludge derive from other manufacturing processes that are beyond the scope of this listing determination. Thus, given the solids' small volume and the low likelihood that the barium carbonate process wastewater contributes any constituents of concern, we propose not to list the ammoniated spent process solution tank solids in this listing determination.

(c) Sludge and spent filter media from filtration of barium chloride solution and barium carbonate drying and sizing unit air pollution control residues. Both the air pollution control dusts from the barium carbonate drying and sizing unit and sludge and the spent filter materials from barium chloride solution filtration exceed the TC regulatory level for barium (100 mg/L). The facility codes the waste as characteristic hazardous waste (D005). The facility stores these small volume wastes in closed containers on-site before sending them to a RCRA Subtitle C hazardous waste treatment and disposal facility for treatment and disposal. We believe that the containers present no significant potential for release to the environment. We believe that regulations applying to characteristic wastes adequately protect against mismanagement. Furthermore, these wastes comprise a very small volume (<1.23 metric tons per year). Thus, we propose not to list these wastes.

3. Boric Acid

a. Summary. We have evaluated the wastes from the production of boric acid and propose not to list any wastes from this process as hazardous under RCRA. These wastes do not meet the criteria set out at 40 CFR 261.11(a)(3) for listing wastes as hazardous. They do not pose a substantial present or potential threat to human health or the environment. We have identified no risks of concern associated with the current management of the wastes.

b. Description of the boric acid industry. Boric acid was produced by two facilities in the United States in 1998. These two facilities are both located in the Mojave Desert in California, one of the few areas where borate minerals can be mined in the United States.

The two facilities mine borates from different sources to produce boric acid. The first recovers borate from brines pumped from beneath Searles Dry Lake, California. The second facility mines sodium borate ores near Boron, California.

The first facility extracts highly mineralized brine and uses a liquid-liquid extraction process to remove the borates from the brine. During the first production step, called the ''loading section,'' the facility mixes the brine with a chelating agent in a kerosene solution that causes most of the boron and some of the sodium and potassium compounds in the brine to bind to the extractant. The loaded extractant is sent through strippers where it is mixed with dilute sulfuric acid to strip the boron, sodium and potassium from the extractant to form boric acid, sodium sulfate and potassium sulfate. The solution is then sent to a solution settler from which the liquor goes to boric acid recovery using crystallization and evaporation techniques.

The second facility mines sodium borate kernite ore to produce boric acid through a process of dissolution, classification, thickening, filtration and crystallization.

Because the facilities use such different sources and production processes, their resulting wastes are very different and are discussed separately. For more detailed information concerning this industry, see the ''Boric Acid Background Document for the Inorganic Chemical Listing Determination'' in the docket for today's proposal.

c. Agency evaluation of wastes generated by the brine recovery process.

Are There Any Wastes in This Process That Fall Under the Bevill Exemption?

The depleted brine from the loading section of the brine recovery process is exempt as a mineral processing beneficiation waste under 40 CFR 261.4(b)(7)(i).[30] This waste from the

[30] The Agency has previously evaluated the Bevill status of wastestreams at the Searles Lake facility; see memos dated February 14, 1992 and June 30, 1993 in Appendix E of the ''Boric Acid Background

Continued

extraction/beneficiation of ores and minerals is thus outside the scope of the consent decree. The facility reported generating 4,600,000 MT in 1998. This Bevill exempt waste is commingled with wastes which do not qualify for the Bevill exclusion later in the process. The portion of the waste which does not qualify for the Bevill exclusion is within the scope of the consent decree and is discussed below.

As discussed in the Agency's prior Bevill evaluations for this facility, mineral processing begins at the liquid-liquid extraction step where sulfuric acid is added to the loaded extractant to produce sodium sulfate and boric acid. Wastes generated before this step, including spent brine, are beneficiation wastes and retain their Bevill exemption. All wastes generated after the beginning of mineral processing are non-exempt solid wastes. Therefore, all of the wastes at this facility which are generated from the liquid extraction step to the end of the process are all non'exempt solid wastes. See the ''Boric Acid Background Document for the Inorganic Chemical Listing Determination'' in the docket for more information on the Bevill exemption for wastes at this facility.

What Kinds of Wastes Are Generated by the Brine Recovery Process?

The Bevill exempt depleted brine from the loading section is sent through an API settler and Wemco floatation cells designed to separate organic compounds from the brine. The organic emulsions generated in these units and in the process settlers are sent to an on-site ''crud'' treatment facility which breaks down the emulsion into aqueous and organic components. This treatment process generates a non-exempt hydrocarbon waste (fuel oil) that is sent off-site to a used oil refinery. The Bevill exempt brine is sent to the ''Trona skimmer'' where it is combined with other non-exempt wastewaters generated during the process. The Trona skimmer acts as a settling pond promoting phase separation of remaining organic materials in the brine. The Bevill exempt brine is then returned to the dry lake for recharging as required by the facility's Bureau of Land Management permit. Because the non-exempt wastewaters are commingled with the Bevill exempt brine in the Trona skimmer, the non-exempt wastewaters are also returned to the dry lake as a small percentage of the overall volume. The non-exempt organic waste removed at the Trona skimmer is stored on-site in a tank until it is shipped off-site to a commercial blender and subsequently burned for energy recovery.

Additional wastes generated by the brine recovery process that are not Bevill exempt include:

—Petroleum contaminated sludges from containment areas around the API settler, Wemco floatation cells, loading section and liquid-liquid extraction (LLX) strippers

—Spent activated carbon collected from the carbon filter system used to purify the borate liquor before it goes into the crystallization units

In addition to the above wastes, the facility also produces other materials during the production of boric acid that are either piped directly back to the production process or used for other purposes. These materials include aqueous residuals and kerosene recovered from the crud treatment process, off-specification product, scrubber water and condensate that are returned to on-site production units for use. Because these materials are reused on-site in production units and there is no significant potential for exposure of these materials to the environment prior to reuse, we found that they present no significant threat. Also, off-specification product, when reinserted without reclamation into the process where it originated, is not a solid waste.

How Are the Wastes From the Brine Recovery Process Currently Managed?

Table III–6 summarizes our information about the wastes from this process:

TABLE III.–6.—BORIC ACID: BRINE RECOVERY PROCESS WASTES

Waste category	1998 volume (MT)	Sequential management practices
Fuel oil from crud treatment facility	690	(1) Stored in covered tank; (2) Sent off-site to a Subtitle C permitted used oil refinery.
Miscellaneous wastewaters	194,040 (The Bevill exempt partially depleted brine volume is 4.6 million MT).	(1) Combined wastewaters; discharged to Trona skimmer with the Bevill exempt partially depleted brine; (2) Removal of organics in skimmer unit; (3) Commingled partially depleted brine and process wastewaters are returned to Searles Dry Lake for recharging.
Organics from Trona skimmer	10	(1) Stored in covered tank; (2) Sent to off-site Subtitle C blender; (3) Burned for energy recovery.
Sludges from containment areas	20	(1) Drum storage; (2) 20 cubic yard roll-off bins; (3) Transported with manifest off-site to Subtitle C landfill as California-only hazardous waste.
Spent activated carbon	43	(1) Washed; (2) Reclaimed in an on-site furnace; (3) Reused in the process.

Document for the Inorganic Chemical Listing Determination'' in the docket.

What Is EPA's Decision About Whether to List These Wastes as Hazardous?

We propose not to list any wastes from the brine recovery process for the production of boric acid. Our rationale for each waste is presented below.

(1) Fuel oil from the crud treatment facility. We propose not to list the fuel oil generated at the crud treatment facility. The facility characterized the fuel oil as 100 percent hydrocarbons. The fuel oil is stored on-site in a covered tank prior to being shipped off-site to a Subtitle C permitted used oil refinery. For those scenarios where wastes are managed in a tank, the impervious nature of the construction materials (concrete, fiberglass, or steel) of tanks is unlikely to result in releases to groundwater in all but the most catastrophic scenarios. We also are not concerned with potential air releases because the tank is covered. The subsequent treatment at the permitted used oil refinery is already regulated under Subtitle C and the used oil regulations. Therefore, we propose not to list this waste.

(2) Miscellaneous wastewaters. We propose not to list the miscellaneous wastewaters. We evaluated the potential for an exposure pathway via groundwater ingestion and determined that no such pathway exists. The facility producing boric acid by recovering borates mined from Searles Dry Lake is located in California's Mojave Desert. The process and associated wastewaters are tied to the Mojave Desert location because it is the source of the borate rich brine. The environment is arid with only 4 inches of precipitation annually. The groundwater under the facility has total dissolved solids (TDS) levels as high as 450,000 ppm. All wastewaters, including the Bevill exempt depleted brine, are co-managed and ultimately returned to the dry lake resource. Due to the extremely high TDS levels in the area, the water is non-potable. The surrounding communities have drinking water piped in from 25 miles away. Therefore, no groundwater exposure pathway exists.

Furthermore, the total volume of the miscellaneous wastewaters is 4 percent of the volume of the depleted brine; any contaminants in these wastewaters would therefore be diluted by a factor of 25 prior to return to the dry lakebed. Most of the miscellaneous wastewaters are generated in the later part of the process and thus we do not expect they will contain constituents of concern at significant levels. There is one wastewater that contains organic constituents not found in the influent brine (formaldehyde and fuel hydrocarbons). This wastewater is generated at the carbon column. However, it only represents 0.03 percent of the total volume that is returned to the dry lake. Also, the reported level of formaldehyde in the waste would be well below the HBL for this chemical (3 mg/L) [31] after mixing with other wastewaters. We are not concerned with potential air releases because the Trona skimmer, where the wastes are mixed, is covered. The facility also mixes a characteristic (D002) HCl acid waste stream with the Bevill exempt depleted brine prior to reaching the Trona skimmer. The resultant mixture is not characteristic and the mixing takes place within a pipeline where there is no opportunity for exposure to the characteristic waste before or during the mixing. Given the factors listed above, particularly the lack of an exposure pathway, we propose not to list the miscellaneous wastewaters.

(3) Organics from the Trona skimmer. We propose not to list the organics (chlorinated hydrocarbons) recovered from the Trona skimmer. The organics are stored in a covered tank before being shipped off-site. For those scenarios where wastes are managed in a tank, the impervious nature of the construction materials (concrete, fiberglass, or steel) of tanks is unlikely to result in releases to groundwater in all but the most catastrophic scenarios. We also are not concerned with potential air releases because both the Trona skimmer and tank are covered. The waste is shipped off-site to a Subtitle C permitted blender prior to being burned for energy recovery in cement kilns. Burning by cement kilns is regulated under MACT standards for cement kilns (64 FR 31989, June 14, 1999 and 64 FR 52827, September 30, 1999). Therefore, we did not further evaluate potential risks from burning the organics under this listing. The facility reported a California-only hazardous waste code CA343 (organic liquids, unspecified) for the waste but did not report any federal characteristic codes. The facility manifests the waste using the California code when they send it to the blender. Because this waste has significant BTU value and also carries a state hazardous waste code, we expect this management practice to continue; we do not believe there would be any significant benefit to the environment by listing this waste.

(4) Sludges from containment areas. We propose not to list the sludges collected from containment areas around the process tanks, the loading section, LLX strippers, Wemco flotation cells and API settlers. The facility reported a California-only hazardous waste code CA611 (petroleum contaminated soils) for the waste but did not report any federal characteristic codes. The facility stores the waste on-site in drums, transfers to it to 20 cubic yard roll-off bins and mixes the sludge with soil, and then ships the waste off-site with a manifest as a California-only hazardous waste to a Subtitle C landfill. The facility is tied to its location in California so we believe it is plausible that the waste will always be treated as a California-only hazardous waste. We do not believe there would be any significant benefit to the environment by listing this waste.

(5) Spent activated carbon. We propose not to list the carbon that is regenerated on-site. The carbon is regenerated in an on-site furnace. The carbon filtration process occurs later in the process after much of the organic additives have settled out of the borate liquor. Consequently, we expect that the filters will not collect high concentrations of constituents of concern, except perhaps kerosene related organics. We expect any such constituents that are filtered out using carbon adsorption to be combustible. There is no potential for exposure prior to the regeneration process or during the return of the activated carbon to the carbon filter. The furnace is permitted by the State of California Air Control Board. Although the permit does not contain any requirements for emission controls, it does require annual reporting. We reviewed the emissions data and do not believe that the emissions from the furnace are of concern. The reported emission levels are significantly below the MACT standards for permitted hazardous waste incinerators (64 FR 52827, September 30, 1999). We expect the use of this furnace to continue because it is expedient to regenerate the carbon on-site, and the facility is unlikely to relocate given the proximity of the mineralized brine source. Therefore, we propose not to list this waste.

d. *Agency evaluation of wastes generated by the kernite ore process.*

What Kinds of Wastes Are Generated by the Kernite ore Process?

The facility generates two primary wastestreams: Tailings and gangue. The tailings include the wastewaters and fine insolubles from ore processing and boric acid production. The tailings are managed in tanks and then pumped to on-site evaporation ponds/surface impoundments. The boric acid gangue which includes clay, sand and other

[31] Based on the RfD in IRIS (2E–1 mg/kg-day) and a 90th percentile drinking water intake rate in children (64 mL/Kg/day).

course insolubles, is produced during the separation of solids from the borate liquor, a step the facility calls ''classification.'' The gangue is placed on a slab for drainage and then managed in on-site waste piles with gangue produced from the other production process at the facility. The drainage from the slab is sent to the tailings ponds. The remaining wastestream is comprised of the filters from the filtration of the borate liquor to remove any remaining insoluble ore material prior to crystallization. The filter aid is washed off weekly and managed with the tailings. The spent filters are transferred to a solid waste bin in preparation for on-site disposal in a industrial Subtitle D landfill.

In addition to the above wastes, the facility also produces off-specification product that is put directly back to the production process. Because the material is reused on-site in production units in ways that present low potential for release, and because we evaluated process waste generated after the secondary material is reinserted into the process, we do not believe that the off-specification product presents significant risks. Note that, when facilities process off-specification product by reinserting the off-specification product back into the process where it originated, without reclamation, the off-specification product would not be a solid waste.

The facility made beneficiation exemption claims under the Bevill amendments for the tailings and gangue wastes. Because we propose not to list these wastes, we did not review the facility's Bevill exemption claims.

How Are the Wastes From the Kernite Ore Process Currently Managed?

Table III–7 summarizes our information about these wastes:

TABLE III–7.—BORIC ACID: KERNITE ORE PROCESS WASTES

Waste category	1998 volume	Sequential management practices
Tailings	Up to 750,000 gallons/day[1]	(1) Stored in tank; (2) Pumped to evaporation ponds/surface impoundments.
Gangue	Portion of 900,000 MT[2]	(1) Placed on slab for drainage; (2) Trucked to on-site waste piles.
Spent filters	3	(1) Stored in solid waste bin; (2) On-site industrial Subtitle D landfill.

[1] Capacity volume for boric acid surface impoundments. Current daily quantity is lower. Source: California Regional Water Quality Control Board permit, board order 6–93–17.

[2] The boric acid coarse gangue is co-mingled with gangue from the other production process at the facility. That process is outside the scope of the consent decree. The boric acid gangue represents only a minor proportion of the total 900,000 tons of gangue typically deposited annually on the waste piles. Source: California Regional Water Quality Control Board permit, board order 6–93–17.

What Is EPA's Decision About Whether To List These Wastes as Hazardous?

For the reasons set out below, we propose not to list any wastes from the kernite ore process for the production of boric acid.

(1) Tailings. We propose not to list the tailings from boric acid production. The tailings are managed in a tank and then pumped to evaporation ponds. The facility provided TCLP data for the tailings. Those data show waste contains arsenic and antimony above health-based drinking water levels. The Agency also assumed that boron was present in significant levels due to the nature of the ore. The facility provided total levels for the boron concentration in the waste. We conducted an in-depth review of the groundwater conditions at the site and have concluded that a groundwater exposure pathway does not exist. No one is currently living near the facility boundary closest to the waste management unit areas and it is unlikely that future development will occur. The closest existing drinking water well is two miles away from the waste management units. It is a community well and is subject to all applicable drinking water standards. In addition, there are several factors described below which make contamination of this well from a potential release from the facility's evaporation ponds unlikely.

The groundwater under the off-site area of land closest to the waste management units is not suitable for use as drinking water. The ore body, which is the raw material for the process, has a localized impact on the groundwater in its vicinity. Monitoring wells in the area show that the groundwater in the geologic strata underneath the off-site area adjacent to the waste management units has total dissolved solids (TDS) levels in excess of three times the maximum level for an aquifer to be considered a drinking water source in California.[32] Additional factors such as low flow rate and high treatment cost make the potential for a private well in that area highly unlikely. Municipalities can tap into an alternative water source through a regional pipeline and need not rely on groundwater.

The geology of the area has several characteristics that reduce the potential for releases from the impoundments from reaching known drinking water sources. The transport time to groundwater for the constituents of concern appears to be significant given the depth to groundwater under the waste management units (170–220 feet) and the affinity of these constituents to bind with soil.[33] The area under the facility has several geologic faults that act as groundwater barriers. The South Borax fault is likely to prevent any potential release from the waste management units from reaching the drinking water source for the existing community well. The fault is located just south of the waste management units, between the units and the well. In addition, the groundwater underlying the waste management units is contained in the tertiary soil layer whereas the community well draws from the quaternary layer. We believe that migration between these two layers would be limited. (The facility submitted a detailed summary of the geologic conditions at the site. This information has been placed in the docket for this rulemaking. See ''Summary of Boron Operations Hydrogeology, Potential Groundwater Receptors and BAP Waste Management Parameters''). Finally, we note that the impoundments in question are designed with a triple liner and leachate collection system, making any significant release less likely over the active life of the units. Based on these factors, we do not believe there is a

[32] California Water Quality Control Plan for the Lathontan Regions, revised 1991 (p. 4.6–1)

[33] Source: California Regional Water Quality Control Board permit, board order 6–93–17.

groundwater exposure pathway from the tailings.

We also assessed the potential for air releases from the tailings ponds. Because the constituents of concern from this process are nonvolatile metals, we are not concerned with releases through volatilization. Although the surface impoundments are evaporation ponds, the facility claims that there is still some level of moisture in the ponds at all times, thereby minimizing release of particulates to the air. The particulates would not likely be subject to wind blown erosion due to the moisture level of the waste. Furthermore, the closest off-site receptors are at least two miles away from the unit. Due to dispersion, it is unlikely that any particulate releases would reach such receptors at significant levels. The facility also provided a risk assessment which assessed the air risks from the tailings ponds. Their assessment did not show any air risks from the tailings ponds even when they assumed a conservative dry down process for the unit. (The facility's air risk assessment is available in the RCRA docket for today's proposal).

In summary, there are several site specific factors that need to be taken into account when evaluating risks from this waste. This is the only facility in the country producing boric acid from ore. The facility is tied to its location because it is the source of the ore. The hydrogeology of the site is such that local groundwater is not suitable for drinking water use, and any potential releases from the unit would be unlikely to migrate to any drinking water source. Furthermore, the facility is remote with the nearest receptors two miles away. Based on all of these facts, we propose not to list the tailings from the kernite ore process for the production of boric acid.

(2) Gangue. We propose not to list the gangue generated during the boric acid process. Initially, the gangue is placed on a slab to drain. The drainage from the gangue is collected and managed with the tailings (we assessed the drainage as part of the tailings wastestream; see section (1) above for our listing recommendation). The drained gangue is trucked to on-site waste piles. The gangue is wet when transported to the waste pile but most of the moisture evaporates quickly in the dry desert environment. The same geological conditions apply to the gangue waste unit as described above for the tailings waste unit. The gangue is ultimately managed as a dry waste pile and there is virtually no precipitation to cause leaching. We assumed a greater risk to groundwater would come from the tailings because there is any liquid associated with the gangue would evaporate before leaching into the subsurface. Based on our decision regarding the tailings, we did not further evaluate the risks to groundwater from the gangue.

We did assess in more detail the potential for air releases from the waste pile. We do not expect releases of the nonvolatile metals from this waste. The moist gangue solids are trucked to on-site waste piles. The gangue contains enough sodium sulfate to cause the gangue piles to set up like cement when it dries, helping prevent erosion and air release of particulates from the pile. As a further check of potential air releases, we examined the potential for release of the constituent of most concern, arsenic. According to data provided by the facility, the total levels of arsenic in the gangue vary between 25 and 78 mg/kg. We compared these total concentrations to one of the levels calculated as part of the EPA's Air Characteristic Study (530–R–99–019b, Aug 1999, Table 4–3). The Study evaluated different waste management and receptor scenarios to determine waste concentrations that would remain below a specific target risk. Using the waste pile scenario at a receptor distance of 150 meters, the study showed that arsenic levels of 6,000 ppm did not cause exceedences of the target risk levels. The concentration levels in the gangue are well below this number. In addition, the location of the facility is remote with the closest residence two miles away, which is significantly beyond the 150 meter range. The Air Characteristics Study only evaluated direct risks from inhalation, not indirect risks. However, due to the desert environment where the facility is located, risks related to consumption of soil, plants or animals are highly unlikely to arise. Based on these factors, we believe that the arsenic levels in the gangue do not present unacceptable risks via the air pathway.

In addition to arsenic, boron and antimony are the two other constituents of concern present in the gangue. Based on data provided by the facility, antimony is found at total concentrations ranging from 36 mg/kg to 84 mg/kg in the gangue. The facility estimated the boron total concentration levels to be 25,000 ppm based on average daily sampling of the gangue. Arsenic is the most toxic of the three constituents. Because the particulate releases and exposure scenario would likely be the same for all three constituents and because, as discussed above, we do not believe arsenic poses a concern, we also believe there are no unacceptable levels of risk from the antimony and boron in the gangue. After assessing possible risks from arsenic, we compared the ratios of the waste concentrations for the three constituents to the ingestion health-based level for each constituent. This ratio for arsenic was an order of magnitude higher than the ratios for antimony and boron, indicating that the highest potential risk from ingestion would arise from the arsenic. Thus, based on the lack of significant risk for arsenic in this waste, the Agency concluded that neither antimony nor boron pose a significant air risk at this site. In addition, as mentioned above in the tailings section, the facility has conducted an air risk assessment. The document shows no significant risk from the management practices for the gangue waste pile. The facility's risk assessment is available in the docket for today's proposal. Therefore, based on all of these factors, we propose not to list the gangue from the production of boric acid using the kernite ore process.

(3) Spent filters. We propose not to list the spent filters generated during the filtration step of the boric acid production process. The spent filters are stored in a solid waste bin and then managed in an on-site industrial Subtitle D landfill. The filtration step occurs late in the process, so we expect minimal contamination. In addition, because the filters are washed weekly, the vast majority of any contaminants filtered out at this stage would be captured by the wash process and managed with the tailings (see section (1) above for listing determination on the tailings). The facility applies a daily cover at the landfill which protects against residual particulates from being released into the air. Furthermore, the quantity of spent filters is relatively small (3 MT), making it unlikely to present a significant risk in the landfill. Finally, the location of the facility is remote with the closest residence being two miles away. Therefore, we propose not to list the spent filters from the kernite ore process for the production of boric acid.

4. Cadmium Pigments

a. Summary. We propose not to list any wastes from the production of cadmium pigments. All of the non-wastewater residuals consistently exhibit the toxicity characteristic for barium, cadmium, and selenium. There is only one producer, and over the past seven years the producer has drummed and shipped with manifests all its non-wastewater residuals to an off-site Subtitle C facility for treatment to applicable LDR standards. The

wastewaters are pretreated on-site in closed tanks prior to discharge to a POTW, which is regulated under the Clean Water Act. We conclude that the existing regulatory controls adequately reduce risks, and there are no exposure pathways of concern. These wastes do not pose a substantial present or potential hazard, and thus do not meet the criteria for listing set out in 40 CFR 261.11(a)(3).

b. Description of the cadmium pigments industry. One facility produced cadmium pigments in the United States in 1998 and 1999. Cadmium pigments are cadmium sulfides of variable composition, usually produced as powders but also available in other forms such as pastes and liquids. Cadmium pigments are used to provide shades of bright yellow, orange, red, and maroon. The shades depend on the ratio of cadmium and zinc to sulfides and selenium. Current uses of cadmium pigments include decorative and protective coatings for plastics, glass, ceramics, rubber and other materials. The coatings provide heat resistance to surfaces and a barrier to chemical and sunlight exposures.

Cadmium pigments are produced by digesting cadmium metal in sulfuric acid, nitric acid, and water to produce a cadmium sulfate solution (liquor). Chemical reagents are added to the liquor to selectively precipitate out metals which are present as impurities. Sodium sulfide and metals (*e.g.,* zinc, selenium) are added to the purified liquor to yield a slurry which, after filtration, is the ''greencake'', the first intermediate product from the cadmium pigments production. The greencakes are then washed, sized, and calcined. The calcined materials are ground, rewashed, filtered, dried, milled, and blended to make different shades.

The use of cadmium pigments is declining.[34] Growth in the overall demand for cadmium pigments is limited to the manufacturing areas requiring use of cadmium pigments, such as the plastics industry, where no substitute is adequate. Our RCRA Section 3007 Survey results show that six out of seven facilities ceased production of cadmium pigments in recent years. The domestic demand for cadmium pigments in the next few years is likely to remain stable. A more complete discussion of this process and the industry is provided in the ''Cadmium Pigments Listing Background Document for the Inorganic Chemical Listing Determination'' in the docket for today's proposal.

b. What kinds of wastes are generated by this process?. Using the facility's survey response, we divided the wastes into two broad categories: Wastewaters and non-wastewaters. Table III–8 summarizes the types of wastes in each category, the characteristics of each waste, waste volume, and current management practices:

TABLE III–8.—CADMIUM PIGMENT PRODUCTION WASTES

Waste category	Reported waste codes	1998 waste volume (MT)	Management practice	
Non-wastewaters				
Miscellaneous solid wastes, including materials from dust collectors, plant cleanup, filtered pigments from the presses, and from the on-site wastewater pre-treatment process.	D005 D006 D010	33.5	Each waste is drummed (separately or sometimes combined) and shipped to a commercial off-site hazardous waste treatment facility to be treated and decharacterized before placing in a Subtitle D landfill. Note: D005—barium D006—cadmium D010—selenium	
Contaminated paper and cloth, including filter bags, filter cloths, filter cartridges, and dust collector bags.	D005 D006 D010	9.3		
Contaminated gaskets generated from the red and yellow calciners.	D005 D006 D010	0.3		
Iron press residue generated from digestion of cadmium metal.	D005 D006 D010	4.5		
Wastewaters				
Gas scrubber wastewater (spent caustic from scrubbing vapors generated from calcination process).		Not reported	pH adjusted, treated to remove zinc and cadmium. The resulting sludge is a part of the miscellaneous solid wastes.	All these wastewaters are then combined and further treated in on-site closed tanks for pH adjustment; 2-step filtration; monitoring for turbidity prior to discharge to a POTW.
Process wastewater from filtering the greencake		Not reported	pH adjusted, treated to recover cadmium.	
Process wastewaters from wet washing system		Not reported.		

[34] USGS Minerals Information, Mineral Commodity Summary, 1996 (see http://minerals.usgs.gov/minerals/pubs/commodity/cadmium/140396.txt)

c. Agency evaluation. After evaluating the characteristics and current management practices of all the waste residuals, we determined that: (1) all the non-wastewater wastes are being properly treated and managed as hazardous wastes under RCRA regulations, and (2) all the wastewaters are being treated on-site in closed tanks and discharged to a permitted POTW, where they are subject to the Clean Water Act. Therefore, we did not pursue risk assessment modeling for any of these wastes. The following are the details of our evaluation:

(1) Non-wastewaters. In its RCRA Section 3007 Survey, the facility classified all four wastes of this category as characteristic hazardous, as generated, for barium, cadmium, and selenium. The facility also provided data characterizing each non-wastewater residual for total and TCLP concentrations of eight TC metals. Except for chromium (which was detected in the TCLP leachate of one waste below its health-based level), no other hazardous constituents were reported. The total volume of these four wastes was 47.6 metric tons in 1998.

Over the past seven years the generator has managed all its non-wastewater wastes generated from the production of cadmium pigments as TC hazardous wastes. These wastes are drummed and shipped with manifests to a commercial off-site Subtitle C facility for treatment. The off-site treatment includes mixing and treating the wastes with other solid wastes and the addition of lime and fly ash to meet the current LDR treatment standards (via stabilization). The resultant mixture forms a concrete-like residue, which no longer exhibits a characteristic and is managed in a Subtitle D landfill. We believe this management, which complies with existing Subtitle C regulations, adequately protects human health and the environment.

Although we generally believe that Subtitle C regulations for characteristic wastes adequately prevent mismanagement, we have additional data that help confirm our conclusion for this waste. The landfill information and leachate data provided by the local and state governments (per our request) indicate that the landfill has a liner with a leachate collection system. The landfill leachate data [35] we have to date demonstrate that constituents detected in the landfill leachates are not attributable to the cadmium pigments production wastes. The landfill information and leachate data are provided in the ''Cadmium Pigments Listing Background Document for the Inorganic Chemical Listing Determination'' in the docket for today's proposal. We recognize that the residues from commercial treatment facilities represent the commingling of wastes from a variety of facilities and wastes. Therefore, information on the landfill leachate from treated material is of limited use. However, the data available indicate that the cadmium pigment wastes do not present a substantial hazard when disposed. Given that the generating facility has followed the reported management practice for seven years, we believe use of this or comparable treatment and disposal will continue.

What Is EPA's Listing Rationale for These Wastes?

We propose not to list any of the four wastes in this category as hazardous because they are already managed in compliance with existing hazardous waste regulations, including full compliance with the BDAT requirements for treatment prior to land disposal. We conclude that available data on the specific cadmium pigment manufacturing wastes do not support a decision to list the wastes as hazardous.

(2) Wastewaters. We propose not to list the wastewaters as hazardous because the gas scrubber and the process wastewaters are pretreated on-site in closed tanks prior to discharge to a POTW. The wastewater treatment tanks provide sufficient structural integrity to minimize potential releases to groundwater. We are unlikely to find potential air releases from these tanks as neither volatile contaminants nor airborne particulates are likely to be present in these wastewaters. During treatment, the closed tanks present no significant threat of release to the environment. After treatment, the wastewaters are subject to the Clean Water Act program. We conclude that the wastewaters do not warrant listing. We assessed solids from the on-site treatment as miscellaneous wastes discussed above in section (1).

5. Inorganic Hydrogen Cyanide

a. Summary. We propose not to list any wastes from the production of inorganic hydrogen cyanide (HCN) as hazardous under Subtitle C of RCRA. These wastes are managed in on-site wastewater treatment processes, industrial landfills, municipal landfills, hazardous waste incinerators, hazardous waste landfills, and hazardous waste injection wells. After analysis of these waste management practices and potential exposure pathways, we concluded that there are no risk pathways of concern. These wastes do not meet the criteria set out at 40 CFR 261.11(a)(3) for listing as hazardous. They do not pose a substantial present or potential hazard to human health or the environment.

b. Description of the inorganic hydrogen cyanide industry. Hydrogen cyanide (HCN) is used in the manufacture of a number of important chemicals including: adiponitrile to produce nylon, methyl methacrylate to produce clear acrylic plastics, sodium cyanide for the recovery of gold, triazines for agricultural herbicides, methionine for animal food supplements, and chelating agents for water treatment.

HCN is manufactured via two primary inorganic synthesis processes: Andrussow and Blausaure-Methan-Ammoniak (BMA). The Andrussow process involves the reaction of ammonia, methane (natural gas) and air over a platinum catalyst; the BMA process is similar except the reaction occurs in the absence of air. The reaction products are quenched with water. Excess ammonia reactant is recovered for reuse in the reaction or converted to an ammonium salt. The aqueous HCN product is purified and concentrated for use as a liquid feedstock for manufacturing of one or more of the final products mentioned above. Two of the Andrussow process manufacturers do not produce a liquid hydrogen cyanide intermediate product but immediately convert the hydrogen cyanide in the reactor gases in a sodium hydroxide contactor to produce liquid sodium cyanide.

There are ten manufacturers of hydrogen cyanide in the United States who use the Andrussow or the BMA process. Of these ten manufacturers, only one uses the BMA process. Two of the nine Andrussow manufacturers use an abbreviated version of the Andrussow process to produce sodium cyanide. Manufacture of sodium cyanide as a final product results in fewer wastes and significantly lower wastewater volumes.

The inorganic hydrogen cyanide industry subject to this rulemaking is composed only of the facilities that produce hydrogen cyanide as an intermediate product or feedstock to manufacture a variety of commercial chemicals using the Andrussow and BMA processes. This proposal specifically does not cover wastes from the manufacturing of HCN as a byproduct in the manufacture of acrylonitrile by the ammoxidation of

[35] Quarterly leachate monitoring data from March 95 to September 98, provided by Michigan's Department of Environment, Wayne County District Office and Local Office.

propylene (Sohio process). The Sohio process is inherently an organic chemical manufacturing process, and is not within the scope of the inorganic chemicals manufacturing industry or the consent decree. Furthermore, we have already evaluated wastes for acrylonitrile manufacturing, and the cyanide wastes associated with the Sohio process (K011, K013, and K014) are subject to Subtitle C regulation.

c. *What kinds of wastes are generated by this process?*

How Did We Categorize the Wastes?

Wastes generated from the production of hydrogen cyanide consist of various types of wastewater, various types of spent filter media, spent catalyst, biological solids from wastewater treatment, and ammonium salts. Based on an assessment of the wastes reported in the survey, the wastes were categorized as follows:

—Commingled wastewaters. This waste includes continuously generated wastewaters such as HCN purification wastewater and ammonia purification wastewater.

—Ammonia recycle cartridge and spent carbon filters. This waste consists of spent filter material and filter solids that are generated during the filtration of the recycled unreacted ammonia stream prior to being reused as process feedstock.

—Biological wastewater treatment solids. The biosolids are generated from the biological treatment of process and non-process wastewaters to remove residual cyanide and organonitrile contaminants.

—Feed gas cartridge and spent carbon filters. This waste consists of spent filter material and filter solids that are generated during the filtration of natural gas prior to being used as process feedstock.

—Process air cartridge filters. This waste consists of spent filter material and filter solids that are generated during the filtration of ambient air that is used in the reaction.

—Acid spray cartridge filters. The waste consists of spent filter cartridges and filter solids from acid spray filters used in the hydrogen cyanide stripper.

—Spent catalyst. This waste consists of metal gauze panels that contain the precious-metal catalyst used to catalyze the synthesis reaction. The catalyst activity diminishes with time and needs to be replaced with fresh catalyst periodically.

—Ammonium sulfate and ammonium phosphate. The ammonium wastes are generated from the neutralization of excess ammonia in the process using sulfuric or phosphoric acid.

—Miscellaneous wastewaters. These numerous wastewaters are generated during plant upsets or shutdowns for maintenance and are reported in detail in the ''Inorganic Hydrogen Cyanide Listing Background Document for the Inorganic Chemical Listing Determination.''

—HCN polymer and sump wastes. These wastes are generated in process vessels, tanks, and wastewater collection sumps and removed during periodic plant maintenance operations.

—Sludge from wastewater collection tank. This waste is generated from the settling of suspended solids in wastewater tanks and removed during periodic plant maintenance operations.

—HCN storage tank solids. These solids settle out of the HCN product. The solids are generated during manual tank cleaning after thorough washing.

—Wastewater filters. These are generated from the filtration of process wastewater prior to deep-well injection.

—Ammonium sulfate filters. This waste is from the filtration of the ammonium sulfate solution from the neutralization of excess ammonia by sulfuric acid. The filtered ammonium sulfate solution is then crystallized into solid form prior to sale as fertilizer.

—Spent ammonium phosphate. Ammonium phosphate solution is used to scrub the off-gas from the reactor to assist in ammonium recovery.

—Organic layer from wastewater collection tank. This is generated from the treatment of commingled HCN wastewater and predominantly non-HCN process wastewater.

In addition to these wastes, other residuals are produced by some of the facilities that are recycled back to the production process. These materials consist of process water and recovered ammonia. These residuals are reused on-site via enclosed piping systems and tanks, minimizing the potential for environmental releases. Also, we evaluated all wastes generated after these secondary materials are reinserted or reused; we do not believe that these secondary materials present significant risks. Consequently, we did not evaluate them further.

How Are These Wastes Currently Being Managed?

Table III–9 summarizes the major waste categories, waste characteristics, waste volumes, and their current management practices:

TABLE III–9.—INORGANIC HYDROGEN CYANIDE PRODUCTION WASTES

Waste Category (Number of facilities)	Reported Waste Codes [1]	1998 volume (MT)	Management practices
Commingled wastewaters (8)	D002	5,600,000	On-site wastewater treatment in tanks or surface impoundments, discharge to NPDES outfall or POTW.
Ammonia recycle cartridge and spent carbon filters (5)	none	73	Off-site municipal D landfill; off-site industrial D landfill; on-site Subtitle C landfill; on-site Subtitle C incineration.
Biological wastewater treatment solids (4)	none; F039[3].	45,397	Off-site industrial Subtitle D landfill; off-site municipal Subtitle D landfill; on-site Subtitle C landfill.
Feed gas cartridge and spent carbon filters (9)	none	9.7	Off-site municipal D landfill; off-site industrial D landfill; on-site Subtitle C landfill as non-hazardous waste; off-site recycle/reuse via return to manufacturer.
Process air cartridge filters (8)	none	7.5	Off-site municipal D landfill; off-site industrial D landfill; reclamation.

TABLE III–9.—INORGANIC HYDROGEN CYANIDE PRODUCTION WASTES—Continued

Waste Category (Number of facilities)	Reported Waste Codes [1]	1998 volume (MT)	Management practices
Acid spray cartridge filters (1)	none	1.1	On-site Subtitle C landfill as nonhazardous waste.
Spent catalyst (10)	none	4.06	Off-site reclamation.
Ammonium sulfate and ammonium phosphate (3)	none	27,425	Off-site use as fertilizer.
Miscellaneous wastewaters (4)	none	209,000	Managed with commingled wastewaters described above.
HCN polymer and sump wastes (1)	none	0.7	Off-site industrial D landfill
Sludge from wastewater collection tank (2)	D001;D018	[2]3.9	Stabilization/off-site Subtitle C landfill; off-site Subtitle C incineration.
HCN storage tank solids (1)	none	0.3	Off-site municipal D landfill
Wastewater filters (1)	none	450	Captive off-site Subtitle C incineration.
Ammonium sulfate filters (1)	none	1.1	Off-site industrial D landfill
Spent Ammonium Phosphate (1)	none	230	On-site reuse as biological treatment system nutrient source or on-site nonhazardous waste incineration
Organic layer from wastewater collection tank (1)	D001	43.3 (1993)	Off-site Subtitle C incineration

[1] D001 (ignitability), D002 (corrosivity), D018 (benzene).
[2] Includes 2.1 MT reported for 1993.
[3] One facility commingles wastewater to generate a hazardous waste derived from F039 wastewater.

d. Agency evaluation. We selected three facilities in Alabama, Tennessee, and Texas to collect record samples of wastes for the listing determination. These facilities were selected based on the survey information for the entire industry sector and collectively represent all the wastes generated and all of the waste management practices used by the manufacturing sector.

(1) Commingled wastewaters.

How Many Facilities Generate This Waste Category and How Is It Managed?

Eight of the ten facilities generated commingled wastewaters from the inorganic hydrogen cyanide process. The total volume of commingled wastewaters reported by these facilities was 5.5 million MT in 1998. Six of these eight facilities treat the commingled wastewaters using one or more of the following operations in their on-site wastewater treatment processes: (a) steam stripping to remove cyanide and ammonia, with off-gasses vented to flares, scrubbers or incinerators; (b) pH adjustment; (c) aerated or non-aerated biological treatment in tanks or lined/unlined surface impoundments; (d) ozone treatment in tanks; (e) oxychlorination in surface impoundments; (f) settling in surface impoundments; and NPDES outfalls, or POTWs. In addition to commingling of the hydrogen cyanide process wastewaters, some facilities also commingle these wastewaters with wastewaters from other non-HCN processes generated in the same chemical manufacturing complex. The remaining two facilities manage their commingled wastewaters by filtration and disposal via deepwell injection.

What Management Scenarios Were Assessed?

Based on the reported management practices, we assessed the potential for releases from tanks and surface impoundments. We decided that risks from the ultimate discharges to NPDES outfalls and POTWs are adequately controlled by the Clean Water Act. Risks from discharges to Class I injection wells with RCRA ''no-migration'' variances are adequately regulated under the Safe Drinking Water Act and RCRA (see section III.D.3).

Potential releases to groundwater. We assessed both the tank and surface impoundment scenarios for potential releases to groundwater and determined that the unlined surface impoundment scenario poses a more significant potential risk to groundwater than the tank scenario. We focused on the surface impoundment pathway because several of the reported surface impoundments are unlined, posing a potential direct release pathway to groundwater. We take the position that tanks, by the impervious nature of the construction materials (concrete, fiberglass, or steel) are not likely to result in significant releases to groundwater. We conducted sampling and analysis of these wastewaters at the three facilities located in Alabama, Tennessee, and Texas currently using surface impoundment-based wastewater treatment systems. We assessed each site individually, because we believe it is reasonable to assume that large volume wastewaters managed in impoundments in question would not be moved off-site or to different locations.

Our decision on what scenario to assess was based on review of our analytical data and the characteristics of the surface impoundments used at the three facilities. We evaluated the potential for groundwater releases to drinking water wells at the Alabama site, and potential surface water impacts at the Tennessee facility. The analytical data for the wastewater managed in the surface impoundment at the Texas facility showed that all levels of the toxicants of concern are below health-based levels, or are associated with other commingled on-site production processes and are not due to HCN production.

The Alabama facility manages wastewater in a series of surface impoundments and tanks that provide equalization, oxidation, maturation, rock-reed filtration, and mixing. In addition, the facility has an emergency holding basin which has also been used for HCN process wastewaters. The surface impoundments are equipped with double synthetic liners with leachate detection and collection systems. The oxidation basin is a concrete-lined structure with an additional synthetic liner. Our analytical data indicates that concentrations at the inlet to the impoundments would exceed the HBLs for one constituent of concern (acetonitrile). A study of existing wells near the facility indicates the presence of private water wells within a one-mile radius of the property boundary. We

therefore assessed these units further for potential releases to groundwater.

The Tennessee facility manages the wastewater in unlined surface impoundments and some of the toxicants of concern were above the health-based levels and water quality criteria, thus, we assessed this facility's impoundments for potential releases to groundwater. As described below, the Tennessee facility and its surface impoundments are sited on the banks of the Loosahatchie River, with no off-site downgradient wells. However, we did assess the impact from potential releases to groundwater to the nearby river at this site.

Potential releases to air. We also examined the air exposure pathway for the wastewater treatment impoundments and tanks because of the potential release of volatile organic compounds and hydrogen cyanide from the wastewater treatment units. EPA is developing maximum achievable control technology (MACT) standards for cyanide manufacturing under the Clean Air Act (CAA), which may address these emissions. Although this rule will be technology-based, the CAA ultimately requires EPA to regulate significant risks remaining after the imposition of technology-based controls. EPA has also proposed regulations under the CAA for volatile organic compound (VOC) emissions from wastewater at Synthetic Organic Chemical Manufacturing Industry (SOCMI) facilities, which would cover the HCN manufacturers (see proposal at 60 FR 46780, September 12, 1994). Therefore, we are deferring control of any air releases to the MACT and SOCMI standards and did not assess this pathway further in today's proposal.

How Was This Waste Category Characterized?

We conducted sampling and analysis of these wastewaters at the three facilities currently using surface impoundment-based wastewater treatment systems. We collected samples at various places in the process, including prior to commingling, so that we could assess the risks of the wastestream at issue here. Today's proposal is based primarily on samples of the commingled wastewaters collected in the wastewater treatment plants.[36] For assessing the groundwater-to-drinking water pathway at the Alabama facility, we used the sample collected at the HCN wastewater collection tank where the HCN wastewaters are collected prior to mixing with other non-HCN wastewaters in the equalization impoundment. We estimated the concentration of the constituents of concern in the equalization impoundment by applying the dilution factor in the impoundment (*e.g.,* 36 to 1 total wastewaters to HCN wastewaters), and we assessed these concentrations in our modeling for this pathway. For the groundwater-to-surface water pathway at the Tennessee facility, we used the sample collected at the exit from the surface impoundments. We used the sample from wastewater exiting the unit, rather than at the inlet, because treatment occurs in the impoundment. However, the inlet data are similar, and even using the inlet data would not significantly increase the surface water screening results.

We analyzed the waste for both amenable and total cyanide, as well as a number of volatile organics and metals. We used the amenable cyanide results as our cyanide risk assessment inputs because we believe that amenable cyanide most closely represents the fraction of cyanide likely to be mobile in a groundwater scenario and the ''free cyanide'' assessed in our health-based level (HBL). However, this had no impact on our risk results, because our data show that amenable and total cyanide results for this waste are the same.

We sampled the wastewater at the Alabama facility in August, 1999. The analytical data for the commingled HCN wastewaters (DG–1–HC–07) represent waste concentrations prior to commingling with other non-HCN wastewaters. Our results for a key chemical, acetonitrile, are qualified as ''estimated'' for this sample as a result of problems during sampling and analyses at this site as described further in Waste Characterization Report, Degussa-Huls; February 25, 2000, available in the docket for today's proposal. The facility's split samples were more problematic, because the analytical instruments were not calibrated for key constituents being analyzed; thus, the split sample results appear even more uncertain. Despite the estimated nature of the results for acetonitrile in this waste sample, the data clearly indicate that acetonitrile is likely to be present in the waste. Acetonitrile, also commonly referred to as methyl cyanide, is a likely by-product from the main reaction between methane and ammonia to form hydrogen cyanide. In addition, samples we collected at the Tennessee facility show that significant levels of acetonitrile are present in the wastewater, albeit at somewhat lower levels than we found at the Alabama site.

We initially sampled at the Tennessee facility in August of 1999 (sample DM–1–HC–08). We used the analytical results for this sample as input to the risk assessment (described further below). However, because our analytical results for amenable cyanide were qualified due to holding time exceedences, we sampled at this facility a second time in October of 1999 to better understand the potential impact of this waste on the environment (DM–2–HC–08). All of the analytical data for these samples are available in ''Inorganic Hydrogen Cyanide Listing Background Document for the Inorganic Chemicals Listing Determination'' in the docket for today's proposal. The second round of sampling showed lower levels of the key constituent of potential concern than found in the first round of sampling. Due to time constraints, we did not re-run the risk assessment model for this pathway to incorporate the second round of analytical data. However, this would result in somewhat lower risks, and thus would have had not impacted our proposed decision.

The critical analytical results for the commingled wastewaters for the Tennessee and Alabama surface impoundments are presented below in Table III–10. These represent the constituents found to be present in the wastewaters at level exceeding the HBLs or AWQC. (Several other constituents were marginally above the AWQC and were not important in the surface water screening.)

[36] The ''Inorganic Hydrogen Cyanide Listing Background Document for the Inorganic Chemical Listing Determination,'' available in the docket for today's proposal, provides all analytical data we developed, as well as split samples collected by industry, where available.

TABLE III–10.—CHARACTERIZATION OF COMMINGLED WASTEWATERS FROM INORGANIC HCN PRODUCTION (MG/L)

Constituent of concern	Sample DM–1–HC–08	Sample DM–2–HC–08 2nd Rnd	Sample DG–1–HC–07	[1] HBL	AWQC
Amenable CN	0.638	<0.01	0.509	0.3	0.005
Nitrite as N	11.5	no analysis	<2.5	2	1
Vinyl chloride	0.029	[3] 0.0066 L	<0.001	0.0009 (0.1)	0.002
Acetonitrile	[4] 50 K	28 L	190	0.09 (0.045)	[2] N/A
Acrylonitrile	0.013	<0.001	<0.0005	0.002 (0.03)	5.9E–05

[1] HBL in parenthesis based on inhalation pathway from residential use of water (*e.g.*, showering).
[2] N/A: Not Applicable.
[3] L: Qualified result with a low bias for positive result.
[4] K: Qualified result with a high bias for positive result.

How Was the Groundwater-To-Drinking Water Risk Assessment Established?

The Alabama facility's surface impoundments are located in the center of an industrial park on the west side of Mobile Bay. The wastewater treatment impoundments are located near the eastern property boundary of the facility and approximately 4,000 feet south of the State of Alabama barge canal. We chose to assess surface water risks at the Tennessee facility, which is closer to a surface water body. However, given the use of groundwater in the area around the Alabama facility, we assessed the possible impact on drinking water wells. We selected the equalization basin as the unit for quantitative modeling. This is the first surface impoundment in the series and is likely to hold the highest level of constituents of concern. We elected not to assess the emergency holding pond, which is used primarily during high stormwater events. Due to the intermittent use of the holding pond, we expect the potential for significant groundwater releases to be greater for the equalization pond. In addition, the equalization pond is covered with a floating synthetic membrane, while the holding pond is not.[37] Our modeling of the covered equalization pond did not assume any loss of the volatile constituents of concern, thus allowing more of the constituents to infiltrate to the groundwater rather than volatilize to the air.

Based on information available in a corrective action plan related to a product spill on-site (Risk-Based Corrective Action Plan for the Sodium Cyanide Production Unit at Degussa Corporation Alabama Facility, Theodore, Alabama; March 19, 1998), the most likely direction of groundwater flow is to the low-lying areas to the north-northeast of the surface impoundments. We found there are drinking water wells located due east of the equalization surface impoundment. Although the wells are located east of the surface impoundment instead of the estimated north-northeast groundwater flow direction, they are at somewhat lower ground elevation than the surface impoundment. Given the uncertainty in the direction of the groundwater flow, we assumed that contaminated groundwater from the surface impoundment could migrate to the east and reach these wells. Based on the available land use and groundwater use information for this area, we performed risk modeling for potential releases to drinking water wells located between 3,100 and 5,280 feet east of the surface impoundment. The minimum distance of 3,100 feet is based on the distance from the impoundment to the eastern boundary of the industrial area controlled by the facility. The maximum distance of 5,280 is the distance east from the impoundment to the closest known well. This drinking water well appears to be located just inside the eastern boundary of the state property, which lies to the east of the industrial park where the facility is located. We also assumed that a future well may be placed in the same State property directly east of the facility's undeveloped tract at approximately 3,100 feet from the surface impoundment. The details of this assessment are presented in the ''Risk Assessment for the Listing Determinations for Inorganic Chemical Manufacturing Wastes'' in the docket for today's proposal. The results of the risk modeling for the only drinking water constituent of concern are presented in Table III–11 below.

TABLE III–11.—GROUNDWATER RISK RESULTS FOR COMMINGLED WASTEWATERS FROM THE PRODUCTION OF INORGANIC HYDROGEN CYANIDE

Percentile	Acetonitrile hazard quotient (HQ) [1]
90th %	0.3
95th %	0.5

[1] Risk from inhalation scenario during showering included exposure factors for both adult and child in the analysis.

How Was The Groundwater-To-Surface Water Risk Assessment Established?

The Tennessee facility and its surface impoundments are sited on the banks of the Loosahatchie River. The surface impoundments are located approximately 800 feet from the river. Based on information available in the Remedial Facility Investigation (RFI),[38] the direction of the groundwater flow is documented to be south towards the Loosahatchie River. The possibility of a public water supply well or private well being located downgradient of the Tennessee surface impoundments is unlikely because the facility boundary extends to the river to the south. Hence, based on the geologic setting of the facility as detailed above, we believe it is highly unlikely that these impoundments could impact drinking water wells via migration of a contaminated groundwater plume. Based on these facts we did not assess the groundwater-to-drinking water well pathway further at this site. We did, however, conduct a screening analysis of potential releases of groundwater to surface water and subsequent exposure via ingestion because of the proximity of the unit to the river. We calculated the concentrations in the river that would result from discharge of contaminated

[37] The facility reported that the cover on the equalization unit was installed to ensure compliance with expected new regulations to control volatile organic carbon emissions from wastewater sources for the Synthetic Organic Chemical Manufacturing Industry (SOCMI) (proposal, 59 FR 46780, September 9, 1994).

[38] U.S. EPA Phase II RFI Workplan, Potentiometric Surface Plan, March 3 & 4, 1999.

groundwater by estimating the infiltration rate for the unlined impoundment and diluting the resulting leachate volume into the river under various flow conditions. The results of this screening level analysis suggest that concentrations of the constituents of concern in the river would be well below the aquatic life AWQC and HBLs for drinking water. The details of the screening analysis are presented in ''Risk Assessment for the Listing Determinations for Inorganic Chemical Manufacturing Wastes'' in the docket for today's proposal.

What Is EPA's Listing Rationale for This Waste?

Our risk assessment results for the surface impoundment scenario, summarized above for drinking water in Table III–11, suggest that the only constituent of concern that required modeling (acetonitrile) does not pose a substantial present or potential hazard to human health and the environment. The HQ was below one at both the 90th and 95th percentile in the probabilistic risk distribution.

The results of our risk analysis also show that hypothetical releases to the adjacent river would not result in exceedences of risk thresholds. Our analysis was conducted at a screening level and thus is based on a number of conservative assumptions that may overstate actual risk. We did not account for dilution of the potential plume in groundwater flowing under the surface impoundment that would result in yet lower river concentrations. We did not account for the likelihood that river water would be pretreated prior to use for drinking and showering. We did not account for volatilization, biodegradation, or hydrolysis of the cyanide and other constituents prior to exposure. Even if we used the surface impoundment influent concentrations, rather than the exit concentrations, as input to the analysis, this waste would not exceed risk thresholds in the adjacent river.

For these reasons, we propose not to list this waste category as hazardous. For a more complete description of this analysis, see ''Risk Assessment for the Listing Determination for Inorganic Chemical Manufacturing Wastes'' in the docket for this proposal.

(2) Ammonia recycle cartridge and spent carbon filters.

How Many Facilities Generate This Waste Category and How Is It Managed?

Five facilities reported generating 73 MT/year of filter media and waste solids in 1998 from the removal of organonitrile polymers from the ammonia recycle stream. The management methods reported by the industry were off-site municipal Subtitle D landfill, off-site industrial Subtitle D landfill, on-site Subtitle C incineration, and on-site Subtitle C landfill.

What Management Scenarios Were Assessed?

We conducted risk assessment modeling for off-site disposal in both a municipal and an industrial landfill, using only those two waste volumes reported to be managed in off-site Subtitle D landfills; volumes managed as hazardous wastes were not included in this array. No significant volatile constituents were detected in this waste (only non-volatile metals were detected; see following section), thus volatilization from landfills to the air was not a pathway of concern.

We did not conduct risk assessment of the voluntary Subtitle C landfill and incineration practices because we assumed that listing would not significantly increase regulatory control for these wastes. Note that these on-site captive units have sufficient capacity and flexibility to accept these relatively small volume non-hazardous wastes.

How Was This Waste Category Characterized?

Two samples were collected at different facilities. We sampled again at both facilities because of problems with the cyanide analyses for the first set of analyses and elevated detection limits for certain metals in the Tennessee sample. Due to the schedule constraints of this determination, we initiated the risk analyses using the first round of samples. The risk analysis and second round of sampling and analysis were conducted in parallel. HBLs are shown in Table III–12.

TABLE III–12.—CHARACTERIZATION OF AMMONIA RECYCLE FILTERS

[mg/L]

Parameter	RH–1–HC–05 (1st data set)		RH–2–HC–05 (2nd data set)		DM–1–HC–04 (1st data set)		DM–02–HC–04 (2nd data set)		HBL
	TCLP	SPLP	TCLP	SPLP	TCLP	SPLP	TCLP	SPLP	
Antimony	[1] 0.55 J	0.59	<0.5	0.237	<0.5	<0.5	0.8	0.08	0.006
Arsenic	[2] 0.045 L	0.039	<0.5	0.0137	<0.5	<0.05	<0.5	0.0112	0.0007
Nickel	0.50 J	0.61	<0.2	0.303	<0.2	0.0654	<0.2	0.0178	0.31
Total CN	N/A	2.4 L	0.230	0.243	0.218	0.187 L	[3] 0.222	0.303	[4] 0.31

[1] J: Estimated result, due to poor field duplication.
[2] L: Qualified result with a low bias for positive result.
[3] Average of duplicate sample results.
[4] HBL for hydrogen cyanide.

How Was the Groundwater Ingestion Risk Assessment Established?

We assessed the off-site landfill scenario for the ammonia recycle filter cartridges, reflecting the types of management reported for this waste. We assessed the groundwater ingestion pathway for these landfills. Our model inputs included different hydrogeologic settings reflecting the two regions where the wastes are reported to be managed. As noted in section III.C., we used the TCLP results for the municipal landfill scenario and the SPLP for the industrial landfill scenario.

As described above, we had some initial concerns about our analytical data and determined that re-analysis would serve to demonstrate the validity of these data. Due to the time constraints of this listing determination, we could not delay the risk assessment modeling until the validated results of the second round of analyses became available, and thus used the first round of samples for the Texas facility as model input. Subsequently, having reviewed all the analytical data, we believe that the modeled data set appropriately characterizes the risks of

all constituents included in the first sampling round, and that re-running the model with the second round of analytical data would not increase the predicted risk. The only additional constituent of concern found in the second analysis was cadmium. We modeled this constituent using the same two scenarios and found no significant risk.

What is EPA's Listing Rationale for This Waste?

The results of our probabilistic risk assessment are provided in Table III–13 below (we also completed deterministic risk modeling and the results were comparable; see ''Risk Assessment for the Listing Determinations for Inorganic Chemical Manufacturing Wastes'' for details). At the 90th and 95th percentile cumulative risk level, we found no cancer risk in excess of 1E–07, nor did we find any hazard quotients that exceeded one. As a matter of policy, we generally do not consider listing wastes with predicted cancer risks of less than 1E–06 or hazard quotients of less than 1.0. We see no special concerns warranting an exception to this policy. Based on these results we conclude that this waste does not pose risk to human health and the environment at levels that warrant listing. We therefore are proposing not to list ammonia recycle filters from inorganic hydrogen cyanide production.

TABLE III–13.—GROUNDWATER RISK RESULTS FOR AMMONIA RECYCLE FILTERS [1]

Percentile	Antimony		Arsenic		Cadmium	
	Adult HQ	Child HQ	Adult cancer risk	Child cancer risk	Adult HQ	Child HQ
Industrial Landfill:						
90th	7.9E–02	1.6E–01	3.8E–08	2.8E–08	3.6E–04	7.7E–04
95th	1.9E–01	3.9E–01	1.6E–07	1.2E–07	1.6E–03	3.4E–03
Municipal Landfill:						
90th	8.7E–02	1.8E–01	3.9E–08	3.1E–08	4.0E–04	8.5E–04
95th	2.0E–01	4.2E–01	1.8E–07	1.3E–07	1.7E–03	3.7E–03

[1] Modeling for two other constituents (nickel and cyanide) yielded HQs that were extremely small (<1E–16) even at the 95th%.

(3) Biological wastewater treatment solids.

How Many Facilities Generate This Waste Category and How Is It Managed?

Four facilities reported a total volume of 45,397 MT/year for this waste. The management methods reported are off-site municipal and industrial Subtitle D landfills, on-site Subtitle C landfill, and off-site use as agricultural liming agent (volume not reported).

What Management Scenarios Were Assessed?

We evaluated the Subtitle D landfill and the agricultural liming agent scenario reflecting the reported management practices. We assessed the landfill scenario using our TCLP and SPLP results for the wastes reported managed in such landfills. We assessed the agricultural use scenario by comparing total constituent concentrations to the soil screening levels (see section III.C.3).

How Was This Waste Category Characterized?

We collected two samples of this waste at two different facilities. We conducted total and leaching analyses of these samples. To evaluate the industrial landfill disposal scenario we compared the SPLP leaching results to constituent HBLs, and for the municipal landfill scenario we compared TCLP leaching results to the HBLs. In all cases the SPLP and TCLP levels corresponding to the management practice were below the HBLs.

For the agricultural liming scenario, we compared the total concentrations in the waste to the soil screening levels; no constituents exceeded these screening levels, *i.e.,* all constituents were below background or direct soil ingestion levels.

The full analyses are summarized in the ''Inorganic Hydrogen Cyanide Listing Background Document for the Inorganic Chemicals Listing Determination'' and the analytical results are reported in detail in the Waste Characterization Reports for this sector; these documents are available in the docket for today's proposal.

What Is EPA's Listing Rationale for This Waste?

We propose not to list this waste as hazardous because the levels of toxicant constituents found in the waste are below the levels of concern.

(4) Feed gas cartridge and spent carbon filters.

How Many Facilities Generate This Waste Category and How Is It Managed?

Nine facilities reported a total volume of 9.7 MT/year for this waste. The management methods reported are off-site manufacturer refurbishing for reuse, off-site municipal D landfill, off-site industrial D landfill, and on-site C hazardous landfill. The facility using the hazardous C landfill for disposal of the filters is managing the filters as nonhazardous waste in a captive on-site C landfill.

What Management Scenarios Were Assessed?

We assessed the municipal and industrial Subtitle D landfill scenarios using our TCLP and SPLP results, respectively. No volatile constituents were detected in this waste (only non-volatile metals were detected; see following section), thus volatilization from landfills to the air was not a pathway of concern. We did not assess the voluntary Subtitle C landfill scenario because we assumed that listing would not significantly increase regulatory control. Note that the on-site unit has sufficient capacity to continue to accept this small volume waste.

How Was This Waste Category Characterized?

We collected one sample of this waste. The analytical results showed that SPLP levels for all constituents are below drinking water HBLs. The TCLP results showed levels that exceeded HBLs for the constituents summarized below in Table III–14:

TABLE III–14.—CHARACTERIZATION OF FEED GAS FILTERS FROM INORGANIC HCN PRODUCTION

[mg/kg or mg/L]

Constituent	Total	TCLP	SPLP	HBL
Boron	17,900	7.4	<0.5	1.4
Lead	18.5	[1] 0.03	[1] 0.003	0.015
Nickel	91.0	0.4	<0.05	0.31
Zinc	1,060	13	<0.5	5

[1] Results are less than the typical laboratory reporting limit, but are greater than the calculated instrument detection limits.

Split sample results provided by the facility were comparable. We did not find cyanide in these wastes.

The full analytical results are summarized in the ''Inorganic Hydrogen Cyanide Listing Background Document for the Inorganic Chemicals Listing Determination'' and are reported in detail in the Waste Characterization Reports for this sector; these documents are available in the docket for today's proposal.

How Was the Groundwater Ingestion Risk Assessment Established?

We assessed the groundwater ingestion pathway for the off-site landfill scenario for this waste, reflecting the types of management reported. As noted in section III.E., we used the TCLP results for the municipal landfill scenario and the SPLP for the industrial landfill scenario. We found that the industrial Subtitle D landfill scenario screened out because all constituents in the SPLP analysis were below their respective HBLs.

The constituents of concern that exceeded their respective HBLs in the TCLP results were boron, lead, nickel, and zinc. We evaluated these constituents using the de minimis volume screening analysis, as described in section III.E.3 of today's proposal. The analysis suggests that lead, nickel and zinc are not of concern. We modeled the remaining constituent, boron, using our standard groundwater model for the municipal landfill scenario. We modeled the municipal landfill scenario, using a hydrogeologic setting reflecting the region where the waste was reported to be managed.

What Is EPA's Listing Rationale for This Waste?

As noted above, the industrial landfill scenario screened out. For the municipal landfill scenario, the results in Table III–15 show that the HQs are well below one at both the 90th and 95th% for the constituent of concern. Thus, our risk assessment results suggest that the only constituent of concern that required modeling (boron) does not pose a substantial present or potential hazard to human health and the environment. For a more complete description of this analysis, see ''Risk Assessment for the Listing Determinations for Inorganic Chemical Manufacturing Wastes' in the docket. Thus, we propose not to list this waste as hazardous.

TABLE III–15.—GROUNDWATER RISK RESULTS FOR FEED GAS FILTERS FOR BORON

Percentile	Adult HQ	Child HQ
90th	0.007	0.01
95th	0.01	0.05

(5) Process air cartridge filters.

How Many Facilities Generate This Waste Category and How Is It Managed?

Eight facilities reported a total volume of 7.5 MT/year for this waste. The management methods reported are off-site industrial D landfill, off-site manufacturer refurbishing for reuse, off-site municipal D landfill, and on-site industrial D landfill. Most facilities reported the practice of filtering the air that they feed to the reactors. Very small volumes of spent filters are generated periodically. We did not assess these wastes beyond the characterization provided in the RCRA Section 3007 Survey results because no wastes were available to sample when we conducted our sampling. The level of toxic constituents is expected to be low because the filters are only used to remove airborne solids from the ambient air used in the process.

What Is EPA's Listing Rationale for This Waste?

We propose not to list this waste as hazardous because we do not believe that the level of any toxic constituents in these small waste volumes would exceed levels of concern that would pose a risk based on management in Subtitle D landfills.

(6) Acid spray cartridge filters.

How Many Facilities Generate This Waste Category and How Is It Managed?

One facility reported a total volume of 1.1 MT/year for this waste. The management method reported was on-site Subtitle C disposal as a nonhazardous waste. The cartridge-type filter elements are used in the process to prevent clogging of spray nozzles used to inject the hydrogen cyanide intermediate product into the HCN stripper. The filters remove process particulates, including rust, from the hydrogen cyanide intermediate product. The waste is generated when the spent filter elements are replaced weekly. While this waste is classified as nonhazardous, the generator disposes of it in the facility's on-site Subtitle C landfill.

How Was This Waste Category Characterized?

No sample of this waste was collected because of unavailability during the sampling time frame and because the level of toxic constituents is expected to be low. The filters are used to remove inert impurities such as pipe scale. The facility washes the filters prior to removal of the filters from the process. We expect that any hydrogen cyanide contamination is removed during this washing. The facility reported in its RCRA Section 3007 Survey that the waste contains a total concentration of cyanide of one ppm.

What Is EPA's Listing Rationale for This Waste?

We propose not to list this waste as hazardous because the level of toxic constituents found in this waste are expected to be below levels of concern. While we do not have any leaching test data, we can conservatively estimate that any leachable level of cyanide would be at least 20-fold less than the 1 ppm total level reported, *i.e,* less than 0.05 mg/L. This is well below the HBL for amenable cyanide (0.3 mg/L). Furthermore, this small volume waste is already managed in a Subtitle C landfill.

(7) Spent catalyst. All ten facilities reported generation of this waste, with a combined total volume of 4.1 MT/year. The management method reported was off-site metals reclamation or regeneration. These catalysts gradually lose their effectiveness over time and are periodically reclaimed. Due to the

high value of these precious-metal materials, generators maintain close control over these materials. The spent material is an impermeable metal gauze that undergoes thorough cleaning and decontamination to eliminate cyanide concentrations prior to removal from the reactor. We have chosen not to evaluate these materials further because management practices for these materials prior to reuse minimize the potential for environmental releases. Therefore, we propose not to list this waste as hazardous because there are no significant known exposure pathways that would present risk.

(8) Ammonium sulfate and ammonium phosphate.

How Many Facilities Generate This Waste Category and How Is It Managed?

Three facilities reported a total volume of 27,425 MT/year for this waste. The management method reported was off-site use as fertilizer.

What Management Scenarios Were Assessed?

We assessed the agricultural end use of this waste by comparing the total constituent results to the soil screening levels. In this case we evaluated the material, because it is land applied.

How Was This Waste Category Characterized?

One sample of this by-product was collected from the Alabama site. The analytical data results show that the detected constituents of concern in the total analyses are below the soil screening levels. In addition, we compared the SPLP leaching results to the HBLs as a screen of potential groundwater exposure.[39] The detected SPLP results are below the HBLs. The analytical results showing the level of toxic constituents are included in the ''*Inorganic Hydrogen Cyanide Listing Background Document for the Inorganic Chemicals Listing Determination*.''

What Is EPA's Listing Rationale for This Waste?

We propose not to list this waste as hazardous because the levels of toxic constituents found in the waste are below levels of concern.

(9) Miscellaneous wastewaters.

How Many Facilities Generate This Waste Category and How Is It Managed?

Four facilities reported a total volume of 209,000 MT/year for this waste category; the total volume represents twenty two different miscellaneous wastestreams that are generated on an intermittent or periodic basis. The management method reported was commingling with other major process wastewater streams described above as the ''commingled wastewaters'' category.

What Management Scenarios Were Assessed?

We did not assess these numerous wastewater streams individually. The wastewaters were assessed indirectly within the commingled wastewater category discussed earlier. The volume and constituents represented by these miscellaneous wastewaters are represented in the total commingled major and miscellaneous wastewater streams.

How Was This Waste Category Characterized?

We did not collect samples of these miscellaneous wastewater streams. The levels of toxic contaminants in these wastewaters are reflected in the contaminant concentrations of the total commingled wastewater streams at each facility. See the commingled wastewater category discussed earlier in this section for a discussion on how the commingled major and miscellaneous wastewater streams were characterized. Two of the miscellaneous wastewaters were reported to contain potentially high concentrations of hydrogen cyanide when generated.

What Is EPA's Listing Rationale for This Waste Category?

We propose not to list this waste category as hazardous. There is no direct exposure pathway into the environment from these individual wastes, because they are treated and commingled with the other wastewaters generated at each facility. Although high concentrations of hydrogen cyanide in the wastewaters are possible for some of these wastes, the risk is reduced by the high dilution that occurs when these wastewaters are mixed with other large volume wastewaters in the facility-wide wastewater collection system. These miscellaneous wastewaters are generated intermittently and infrequently. Thus, any potential releases from land-based management of the wastes after dilution in with other wastewaters would be short-lived, and unlikely to result in any significant long-term risk. In addition, the hydrogen cyanide contaminant is readily and rapidly treated in the wastewater treatment systems, so that any risk is minimized. For example, the tank farm scrubber water from the Tennessee facility is treated through oxychlorination, which rapidly destroys the hydrogen cyanide. As noted earlier, potential hydrogen cyanide releases via the air pathway would be covered by the Hydrogen Cyanide MACT rule.

(10) HCN polymer and HCN sump wastes. One facility reported a total volume of 0.7 MT/year (0.3 MT/yr polymer and 0.4 MT/year sump wastes) for these two wastes. The physical description of the wastes was reported as dirt, debris and inert polymer solids. The wastes are disposed of in an off-site industrial Subtitle D landfill. Very small volumes of these wastes are generated periodically. We did not assess these wastes beyond the characterization provided in the RCRA Section 3007 Survey results because of the unavailability under the sample schedule and because of the low concentrations of toxic constituents expected to be present in this waste.

In the RCRA Section 3007 Survey, the one generator reported that total levels of cyanide were 50 mg/kg for the HCN polymer and 5 mg/kg for the sump wastes. These levels are unlikely to pose a risk in a landfill scenario for these very small waste volumes. In support of this, we note here, as we did above for the acid spray filter cartridge waste category, leaching test results would be at least 20-fold less than the total levels. This would mean any leaching from sump waste would be below the HBL for cyanide. While this 20-fold factor would leave the HCN polymer somewhat above the HBL at 2.5 ppm cyanide, we note that groundwater modeling for cyanide for the ammonia recycle filters indicates similar levels of cyanide in a larger waste volume presents very low levels of risk in a landfill scenario. Therefore, we propose not to list HCN polymer and HCN sump wastes.

(11) Sludge from wastewater collection tank. One facility reported a volume of 2.1 MT over a seven year period, or approximately 0.3 MT/year for this waste. The waste was coded as hazardous (D001), stabilized on-site and disposed of in an off-site Subtitle C landfill. The waste is generated approximately every ten years; the volume reported was for 1993 with no generation of that waste since that date. This waste results from sedimentation in a wastewater collection tank. HCN wastewaters managed in this tank only account for ten percent of throughput; the sediment thus is only marginally associated with HCN production. One other facility reported generating 1.8 MT of this waste, and also codes it as characteristically hazardous waste (in this case as D018 for benzene). This

[39] Note that the SPLP/HBL groundwater screen for this scenario is likely to be a worse-case screening, because the fertilizer application scenario isn ot analogous to a landfill scenario, particularly with respect to application rates.

second facility sends the waste off-site to a Subtitle C incinerator; the facility reported that the benzene was derived from other on-site processes. We propose not to list these wastes because they are very small volume wastes that are already managed as characteristically hazardous wastes in full compliance with the Subtitle C regulations. In addition, the wastes are generated from the treatment of predominantly non-HCN wastewater from unrelated petrochemical processes at the facilities.

(12) HCN storage tank solids. One facility reported a volume of 0.3 MT/year for this waste. During periodic shutdowns of this product tank for cleaning, solids are removed after rigorous washing of the tank interior to remove soluble cyanide. The waste consists of polymer and tank scale. The waste is disposed of in an off-site municipal Subtitle D landfill. A sample of this waste was not collected because of unavailability during the sampling time frame. However, the waste description provided by the facility indicates the waste is similar in composition to the ammonia recycle filters, which we have proposed not to list. Given the much smaller volume here, this waste is not expected to present significant risk. Therefore, we are proposing not to list this waste as hazardous.

(13) Wastewater filters. One facility reported a volume of 450 MT/year for this waste. The waste is managed in a captive, off-site Subtitle C incinerator as characteristically hazardous waste. The waste is spent filters from the filtration of commingled wastewaters from various on-site processes prior to on-site deepwell injection and is generated periodically. A sample of this waste was not available during the sampling time frame. However, the one generator reported that the waste is characteristically hazardous due to benzene, and the facility manages the waste as D018. The source of the benzene is the waste from other non-HCN process wastewaters at the facility. We propose not to list this waste because it is already managed as a hazardous waste in accordance with Subtitle C regulations.

(14) Ammonium sulfate filters. One facility reported a volume of 1.1 MT/year for this waste. The waste is managed in an off-site industrial landfill. The waste is generated periodically. We did not assess this waste beyond the characterization provided in the RCRA Section 3007 Survey results because of the unavailability of samples under the sample schedule. However, the facility reported concentrations of cyanide (1 mg/kg) and ammonium sulfate (5,000 mg/kg). This concentration of cyanide is considered to be very small and is not expected to be of concern (see discussion of cyanide for acid spray cartridge filters). In addition, we collected a sample of the ammonium sulfate by-product (*i.e.,* the material being filtered to generate this waste) and did not find any constituents of concern. See discussions for ammonium sulfate and ammonium phosphate. Therefore, we propose not to list this waste as hazardous because we do not believe that there are any significant levels of toxic constituents in the waste.

(15) Spent ammonium phosphate. One facility reported a volume of 230 MT/year for this waste. The waste is reused on-site as a nutrient source in the biological treatment unit or incinerated on-site in a nonhazardous waste incinerator. The waste is generated in batches one or two times per year. The waste is generated from the scrubbing of the reactor off-gas stream using aqueous monoammonium phosphate solution in the ammonia recovery process. The resulting diammonium phosphate solution is then purified to recover the ammonia and the resulting spent ammonium phosphate solution is stored in tanks prior to final management. We did not assess this waste beyond the characterization provided in the § 3007 Survey results because of the unavailability of samples under the sample schedule; the characterization indicates the presence of organonitrile compounds in the waste. However, the preferred management method is to reuse the waste as a nutrient source in the biotreatment system, with incineration only when this is not possible due to the solution becoming spent or when the concentrations of phosphate and ammonia are incompatible with the wastewater treatment system. We believe the levels of organonitrile compounds do not pose a risk under either management scenario. The wastewater treatment scenario results in the destruction of the compounds via biodegradation and the incineration scenario would also result in destruction of the volatile organonitriles. Additionally, emissions from the on-site incinerator would be regulated under the Hydrogen Cyanide MACT standards which will be proposed in 2000. Therefore, we propose not to list this waste as hazardous.

(16) Organic layer from wastewater collection tank. One facility reported a volume of 43.3 MT/year for this waste. The waste is coded as D001 and sent off-site Subtitle C incineration. This waste is generated approximately every ten years; the volume reported was for 1993 with no generation of the waste since that date. Thus, on an annualized basis the waste quantity generated would be approximately 4 MT/yr. We did not assess these wastes beyond the characterization provided in the RCRA Section 3007 Survey results because of the unavailability of samples under the sample schedule. We propose not to list this waste as hazardous because the waste is managed as characteristically hazardous in accordance with all applicable Subtitle C standards, which adequately protect against mismanagement. Further, the waste is generated from the treatment of predominantly non-HCN wastewater from other unrelated petrochemical processes at the facility. Only ten percent of the wastewater throughput in the tank generating this waste is associated with HCN production; the percentage contribution from the HCN process to this oily layer is likely to be much lower, because other petrochemical processes on-site are likely sources of the organic material.

6. Phenyl Mercuric Acetate

a. Summary. We propose not to list any wastes from the production of phenyl mercuric acetate (PMA) as hazardous under Subtitle C of RCRA. PMA currently is not manufactured in the United States, and it is extremely unlikely that it will be manufactured in the United States in the future. Therefore, there are no wastes being generated that could be subject to a listing determination.

b. Description of the phenyl mercuric acetate industry. PMA ($C_8H_8Hg\ O_2$) is an organic mercury compound, a white to creamy white odorless crystalline powder or clear solution. Prior to 1990 it was the predominant fungicide used in the latex paint industry. In 1990, EPA banned the use of PMA in interior paint (55 FR 26754, June 29, 1990) and subsequently, the paint industry ceased using PMA in paint production. PMA is still used for other limited purposes (*e.g.,* slimicide in paper mills; selective herbicide for crabgrass; fungicide for diseases of turf on golf greens and tees; fungicidal seed dressing for seed- and soil-borne diseases of cereals, sorghum, and groundnuts).

Based on our research and the results of our RCRA Section 3007 Survey, we conclude that there is no domestic production of PMA. Any domestic demand is met by imports from other countries. See the ''Phenyl Mercuric Acetate Listing Background Document for the Inorganic Chemical Listing Determination'' for details.

c. Agency evaluation. PMA is not produced within the United States and is not widely used in domestic manufacturing processes. Therefore, we have no reason to believe that wastes from the production of PMA are generated within the U.S. Given the compound's limited market within the U.S., it is highly unlikely that new production of PMA will occur within the U.S. in the future. As a result of these market conditions, there are no wastes that can be assessed for this sector. Therefore, we propose not to list any PMA production wastes as hazardous.

7. Phosphoric Acid From the Dry Process

a. Summary. We have evaluated the wastes from the production of phosphoric acid manufactured via the dry process, and propose not to list any wastes from this process as hazardous wastes. These wastestreams do not meet the criteria set out at 40 CFR 261.11(a)(3) for listing wastes as hazardous. They do not pose a substantial present or potential threat to human health or the environment. We have identified no risks of concern associated with the current management of these wastes.

b. Description of the phosphoric acid industry.

Phosphoric acid was produced by the dry process by eight facilities in the United States in 1998. The majority of phosphoric acid is consumed in the manufacture of phosphate salts. These phosphorus-containing compounds are used in detergents, animal feed supplements, dentifrices, fertilizers, metal treating, water softening, leavening agents, and flame and fire retardants.

In the dry process, elemental phosphorous is burned in excess air generating phosphorous pentoxide (P_2O_5). The resulting phosphorus pentoxide is hydrated with a spray of recycled phosphoric acid and water, forming phosphoric acid that is collected as product. Scrubbers are employed for the hydrator off-gases to absorb as much phosphoric acid mist as possible from the excess air. The strong phosphoric acid stream from the hydrator is purified with hydrogen sulfide to precipitate out arsenic trisulfide. This sludge is removed by filtration. In some cases, off-specification product is filtered and recycled into the process. The product may also be filtered after it leaves the storage tank and prior to loading in truck and railcars.

c. Description of wastes generated by the phosphoric acid process. We have identified fourteen waste categories from the production of phosphoric acid (via the dry process) that required assessment. These waste categories are described briefly and in more detail in the following subsections.[40]

—Arsenic filter cake is the result of filtering the phosphoric acid after the addition of sodium hydrosulfide or hydrogen sulfide gas and a filter aid. The precipitate consists of arsenic trisulfide and other heavy metal sulfides which are essentially insoluble in strong acid.

—Combustion chamber slag (infrequently generated) is the result of residue buildup on the walls of the chamber.

—Off-specification phosphoric acid is generated when the product does not meet color or concentration specifications.

—Spent filters (from purification) are generated from the units that are used to remove arsenic from the phosphoric acid.

—Caustic scrubber water is generated when air used to remove hydrogen sulfide gas at the acid purification step is scrubbed. This scrubbing operation controls odor and acid mist before the air is discharged to the atmosphere.

—Phosphoric acid spills occur around the process or storage tanks area. These materials are collected in contained areas and pumped to management units.

—Clean-up and washdown water from across the units is collected in a sump and discharged to the wastewater treatment system.

—Process acid leaks occur when piping and coupling break, or during equipment maintenance. These materials are collected in contained areas and pumped to management units.

—Spent mist eliminator packing (filters) are used in the scrubber system to remove gas and acid particulates from the phosphoric acid. The filter packing material is reported to consist of polyester fibers, stainless steel, steel wool or fiberglass. The filters are periodically replaced and the spent packing is washed prior to disposal.

—Rubber liners of product storage tanks are periodically replaced.

—Spent filters for product are generated when product is filtered prior to loading into tank cars and trucks to remove settled solids. The filters are changed periodically and rinsed with water prior to disposal.

—Spent activated carbon for off-specification product is generated when carbon is used to remove traces of contaminants from the off-specification product.

—Spent filters for off-specification product is generated when filters are used to remove solids from the off-specification product.

—Wastewater treatment sludges are generated when wastewaters from the phosphoric acid and other processes are treated. These sludges are only marginally derived from phosphoric acid wastewaters due to commingling with large volumes of other non-phosphoric acid wastewaters. The solids that are removed by filtration are landfilled or sold.

Three facilities reported that they collect phosphoric acid in air pollution control devices (*i.e.,* vent scrubbers, absorbers, mist eliminator). Each site reported that they then recycle these acids into the production process. This material is continuously reused in the production process. Based on our site visits, the material is piped from the generating unit to the production process, minimizing the potential for releases to the environment prior to reuse. We evaluated all wastes generated after the materials are reused and concluded that none merited listing. Consequently, we do not believe that these materials present significant threats.

At two of the facilities, the caustic scrubber water, generated from scrubbing the air to remove hydrogen sulfide gas, is returned as makeup solution to the purification process. Based on information from one of the facilities and our site visit, the material is piped from the generating unit to the production process, and there is no significant potential for exposure. Also, process acid leaks are collected in tanks at one facility and piped back to the acid process, with no significant exposure route for this material. As stated above, we evaluated all wastes generated after the materials are reused and concluded that none merited listing. Consequently, we do not believe that these materials present significant threats.

We have organized our discussion of these wastes in terms of how they are currently managed: characteristic wastes, wastewaters, and non-characteristic solid wastes.

[40] One facility has shut down their phosphoric acid process and reported few wastes generated in 1998. This facility's wastes therefore are not included in the following overview, but were evaluated to determine their potential threat to human health or the environment. The details of this facility's waste generation and management practices are included in the ''Phosphoric Acid Listing Background Document for the Inorganic Chemical Listing Determination''.

d. Agency evaluation. (1) Characteristic wastes. The RCRA Section 3007 Surveys show that a number of wastes are managed as RCRA characteristic wastes at all times. These wastes are hazardous wastes because they exhibit the characteristics of corrosivity or toxicity for arsenic. We believe that these wastes are managed according to the applicable RCRA Subtitle C regulations, including LDR standards. The LDR restrictions apply prior to land disposal. Furthermore, these wastes are managed or disposed in Subtitle C management units. Table III–16 summarizes our information regarding the generation and management of these wastes.

TABLE III–16.—CHARACTERISTIC WASTES FROM PHOSPHORIC ACID PRODUCTION DISPOSED IN SUBTITLE C UNITS

Waste category	Number of reported generators	1998 Volume (MT)	Reported hazard codes	Final management practices
Arsenic filter cake	7	614	D002, D004	Subtitle C landfill
Combustion chamber slag	1	0.1	D002	Subtitle C incineration
Off-specification phosphoric acid	1	0.71	D002	Subtitle C landfill
Spent filters (from purification)	2	4.6	D004	Subtitle C incineration or Subtitle C landfill

We propose not to list these four waste categories as hazardous wastes under RCRA. All generators of these wastes already report managing these materials as hazardous from the point of generation through disposal, because they exhibit one or more of the hazardous waste characteristics. We believe that the rules applying to characteristic wastes adequately protect against mismanagement.

(2) Other characteristic waste.

TABLE III–17.—OTHER CHARACTERISTIC WASTES FROM THE PRODUCTION OF PHOSPHORIC ACID

Waste category	Number of reported generators	1998 Volume (MT)	Reported hazard codes	Sequential management practices
Phosphoric acid spills	2	2.2	D002	(1) Neutralized, (2) roll-off bin, (3) Subtitle D landfill; (1) Tanks, (2) neutralized in surface impoundment, (3) NPDES

We assessed the specific management practices employed for this wastestream, as summarized in Table III–17, and determined that no exposure scenarios of concern exist. One facility reported that the wastestream is managed as hazardous (D002), neutralized, and disposed of in a Subtitle D landfill. These product spills are expected to be mostly phosphoric acid, which is hazardous because it is corrosive. The facility effectively treats and neutralizes these wastes prior to disposal. There is no significant risk expected from the disposal of the small volume (0.5 MT/yr) of treated spills to the landfill.

The second facility reported placing the untreated spills into its wastewater treatment system, which includes both tanks and impoundments. Again, we expect that this waste presents hazards because of its corrosivity, not because it contains hazardous constituents. We do not expect releases to groundwater from tanks because we assume that they function effectively. With regard to the surface impoundment, we note that the facility has estimated that these small volume spills make up less than 0.001% of the total wastewater volumes. We expect that dilution of this magnitude would effectively treat the spills rapidly. Further, the facility reported that the wastewaters in the impoundment are neutralized. Consequently, we do not anticipate that any potential releases from the surface impoundment would pose a significant threat to groundwater. Ultimately, the spills are discharged, along with the much larger volume of wastewaters generated on-site, to surface waters under a NPDES permit, which provides effective control and an exemption from RCRA regulations. We also note that we expect no release of constituents of concern to the air from either the tank or the impoundments, because the waste contains no volatile constituents.

(3) Wastewaters. Wastewaters are generated at various points in the process as a result of scrubbing operations, equipment cleanup, and management of leaks and spills. As reported by the facilities, the primary constituents of concern in these wastewaters are phosphoric acid and traces of hydrogen sulfide, which are readily treated and controlled via neutralization. Phosphoric acid, when neutralized, forms various phosphate salts, none of which are known to pose a significant risk to human health and the environment. Similarly, hydrogen sulfide is neutralized to form nonvolatile salts. All facilities report that these wastewaters comprise very small portions of the overall wastewater treatment throughput, which contains wastewaters from other unrelated on-site processes. Table III–18 summarizes our information on these wastewaters.

TABLE III–18.—WASTEWATERS FROM PHOSPHORIC ACID PRODUCTION

Waste category	Number of reported generators	1998 Volume (MT)	Reported hazard codes	Sequential management practices
Caustic scrubber water	1	36	none	(1) pretreatment in covered tanks, (2) POTW

TABLE III–18.—WASTEWATERS FROM PHOSPHORIC ACID PRODUCTION—Continued

Waste category	Number of reported generators	1998 Volume (MT)	Reported hazard codes	Sequential management practices
Cleanup water	1	small volume (volume not reported)	none	(1) pretreatment in covered tanks, (2) POTW
Process acid leaks	1	25[1]	none	(1) pretreatment in covered tanks, (2) NPDES

[1] The 25 tons include leaks from eight processes, of which one is phosphoric acid production. The individual volume of leaks from phosphoric acid production is unknown.

We have assessed the management practices employed for these wastes and determined that no exposure pathway of concern exists. We believe these wastewaters will continue to be managed in existing tank-based treatment systems. We believe the manufacturers have made a considerable investment in wastewater treatment systems using tanks and will continue to use them. Further, we assumed that wastewater treatment tanks retain sufficient structural integrity to prevent wastewater releases to the subsurface (and therefore to groundwater), and that overflow and spill controls prevent significant wastewater releases. Thus, based on the lack of any significant likelihood of release of the constituents to groundwater, we did not project significant risks to groundwater from these wastes in the tank-based wastewater treatment scenario. Furthermore, discharges to POTWs and surface waters under NPDES are regulated under the Clean Water Act and are exempt from RCRA Subtitle C regulation and thus were not assessed.

We also considered the possibility of air releases from tanks. The only potential volatile constituent of concern in these wastes is hydrogen sulfide. The treatment processes employed are designed to neutralize this compound, reducing the potential for volatilization. In addition, the facilities have installed tank covers, further reducing the likelihood of release to the air. As a result, we did not model releases to air from tanks from the production of phosphoric acid. Thus, we propose not to list these wastewaters as hazardous wastes under RCRA.

(4) Non-characteristic solid wastes. The phosphoric acid sector reported six waste categories that do not routinely exhibit any of the hazardous waste characteristics and that are often managed in Subtitle D landfills, as summarized in Table III–19:

TABLE III–19.—NON-CHARACTERISTIC SOLID WASTES

Waste category	Number of reported generators	1998 Volume (MT)	Reported hazard codes	Sequential management practices
Spent mist eliminator packing	5	28.4	None	(1) storage in containers, (2) treatment to control acid (washing, neutralization, or off-site stabilization by one facility), (3) recycling or disposal in Subtitle C or D landfills.
Rubber liners	2	19.8	None	(1) storage in containers, (2) Subtitle C incineration or neutralization before Subtitle D landfill.
Spent filters for product	1	0.5	None	(1) storage in containers, (2) off-site stabilization, (3) Subtitle D landfill.
Spent activated carbon for off-specification product.	1	[1] 3	None	(1) storage in containers, (2) off-site stabilization, (3) Subtitle D landfill.
Spent filters for off-specification product	1	0.5	None	(1) storage in containers, (2) off-site stabilization, (3) Subtitle D landfill.
Wastewater treatment sludges	3	[2] 0.005	None	(1) storage in containers, (2) Subtitle D landfill.

[1] 1996 volume; none generated in 1997 or 1998.
[2] Two facilities did not report volumes due to very small input of phosphoric acid production wastes to the WWT system; one facility estimated that 0.0001% of 4,640 MT sludge generated (or 0.005 MT) was from phosphoric acid production.

The spent mist filters collect phosphoric acid mist before arsenic trisulfide is precipitated out. The material which condenses in the filters is expected to be corrosive and may contain some arsenic. However, the material used for filter packing in the mist eliminators is typically polyester, fiberglass, or steel wool. The filter packing provides surface area for condensation, not absorption, and is not expected to accumulate waste or constituents. Thus, arsenic is not expected to adhere to the filters as condensate drops back into process. The generators treat the spent filters prior to disposal to remove or immobilize any low levels of constituents that may remain.

The rubber liners and spent filters for product are associated with food-grade products. We expect any contaminant levels to be extremely low due to purity requirements. Consequently, we believe it is unlikely that they contain any constituent at levels of concern (*i.e.,* above health-based limits for ingestion). We also note that both wastes are treated prior to disposal in landfills.

Similarly, we do not expect the spent carbon or spent filters associated with off-specification product to contain significant levels of constituents of concern. Product is classified as ''off-specification'' due to color and concentration of acid, rather than

because of the presence of any contaminants. We note again that these wastes undergo treatment prior to placement in landfills. In addition, both the activated carbon, which is infrequently generated, and the off-specification filters are very low volume wastes (on an annualized basis, the spent carbon totals about 1 MT and the spent off-specification filters equal 0.5 MT).

As stated in the wastewater rationale, the wastewater contribution from the phosphoric acid process is insignificant. Therefore, the volumes of treatment sludge (and any constituents of potential concern) attributable to the phosphoric acid process are small and unlikely to present any significant risk.

We do not believe any of these materials contain significant concentrations of any contaminants of concern. Therefore, we propose not to list these wastes as listed hazardous wastes under RCRA.

8. Phosphorus Pentasulfide

a. *Summary.* We have evaluated the wastes from the production of phosphorus pentasulfide and propose not to list any wastes from this process as hazardous. These wastestreams do not meet the criteria set out at 40 CFR 261.11(a)(3) for listing a waste as hazardous. They do not pose a substantial present or potential threat to human health or the environment. We have identified no risks of concern associated with the current management of these wastes.

b. Description of the phosphorus pentasulfide industry. Phosphorus pentasulfide was produced by three facilities in the United States in 1998. Phosphorus pentasulfide is used in the manufacture of lubricating oil additives, insecticides, ore flotation agents and specialty chemicals.

The production of phosphorus pentasulfide begins by feeding liquid phosphorus and liquid sulfur into a reactor. The reaction is carefully controlled because phosphorus pentasulfide reacts violently with air forming phosphorus pentoxide and sulfur dioxide and because toxic hydrogen sulfide gas forms when phosphorus pentasulfide combines with moisture on exposure to air. To reduce this hazard, the process equipment is continuously purged with nitrogen. The phosphorus pentasulfide vapors are distilled and the liquid from the process is solidified, milled and packaged.

One facility operates its entire process under nitrogen blanket. The blanketed vessels, packaging area and tote-bin wash systems are all vented to a caustic scrubber. A second facility vents the reactor to a caustic scrubber that removes the sulfur dioxide and hydrogen sulfide and generates a blowdown wastestream. The facility has other scrubbers that remove phosphorus pentoxide from the exhaust stream and reacts it with water to produce a dilute phosphoric acid that is routed to their acid plant. The third facility fills the reactor, condenser and packaging equipment with nitrogen to prevent oxidation. This nitrogen stream is scrubbed with recirculating water to remove phosphorus pentasulfide dust. The scrubber liquor is treated and discharged.

c. Description of wastes generated by the phosphorus pentasulfide process. We have identified nine waste categories from the production of phosphorus pentasulfide that required assessment. These waste categories are described briefly and in more detail in the following subsections.

—Still residue/reactor waste is the result of impurities being left behind when the phosphorus pentasulfide is distilled to remove undesirables (high boilers). This residue consists of glassy phosphates, carbon, and iron sulfide compounds and is removed from the reactor during unit turn-around.

—Phosphorus pentasulfide scrap waste is occasionally generated during certain maintenance operations or equipment failure. This waste can also consist of commercial off-specification material and fugitive dust from the packaging operation.

—Absorbents contaminated with phosphorus pentasulfide and Therminol (benzylated ethyl benzene) are generated from cleaning up leaks during maintenance operations. The absorbent material may be in the form of floor dry (a granular material) or an absorbent pillow.

—Waste Therminol is a spent heat transfer product used for the vessels and pipes to prevent freeze up of the liquid phosphorus pentasulfide.

—Scrubber water is generated as a result of a nitrogen stream being scrubbed to remove phosphorus pentasulfide dust. The packaging equipment is filled with nitrogen to prevent oxidation.

—Caustic scrubber water is the result of the reactor, packing and tote bin wash system being vented to the scrubber to remove sulfur dioxide and residual hydrogen sulfide.

—Tote bin wash water results from cleaning the shipping containers that hold the product. The phosphorus pentasulfide residue is washed from the returned containers with water and caustic.

—Scrap sulfur is occasionally generated when making or breaking couplings to hoses where sulfur comes into the reaction.

One facility reported that they filter elemental phosphorus before feeding it to the reactor. The filter solids, called phosphorus impurities, are managed in tanks and then are piped to that facility's phosphoric acid production furnace for phosphorus reclamation. Because there is low potential for significant exposure from on-site storage prior to entry in the furnace, we did not evaluate this material further under this sector. Note that wastes generated from the production of phosphoric acid via the dry process, including this facility's phosphoric acid furnace, are addressed in section III.F.7 of today's proposal.

We have organized our discussion of these wastes in terms of how they are currently managed: characteristic wastes, wastewaters, and scrap sulfur.

d. Agency evaluation. (1) Characteristic wastes. The RCRA Section 3007 Surveys show that a number of the phosphorus pentasulfide wastes categories are managed as RCRA hazardous wastes at all times. These wastes are hazardous because they exhibit the characteristics of ignitability, reactivity or toxicity for chromium or benzene. The facility that generates the largest volume waste, phosphorus pentasulfide scrap waste, considers it to be a listed hazardous waste (U189). The surveys also show that these wastes are managed as hazardous wastes, with final disposition by incinerated in Subtitle C units. Table III–20 summarizes our information about these wastes.

TABLE III–20.—CHARACTERISTIC WASTES FROM PHOSPHORUS PENTASULFIDE PRODUCTION DISPOSED IN SUBTITLE C UNITS

Waste category	Number of reported generators	1998 volume (MT)	Reported hazard codes	Final management practices
Still residue/reactor waste	2	4.6	D003, D007	Subtitle C incineration.
Phosphorus pentasulfide scrap waste	3	67.75	D001, D003, U189.	Subtitle C incineration.
Contaminated absorbent	1	1.2 (1996)	D003	Subtitle C incineration.
Waste Therminol	1	1.4	D018	Subtitle C incineration.

We propose not to list these four waste categories as hazardous wastes under RCRA. All generators of these wastes already report managing these materials as hazardous from the point of generation through incineration because they exhibited one or more of the hazardous waste characteristics. Again, the rules applying to characteristic wastes adequately protect against mismanagement. Furthermore, ninety percent of the waste are already listed as commercial chemical product (U189). Therefore, we propose not to list these wastes.

(2) Wastewaters. Wastewaters are generated at various points in the process as a result of scrubbing operations and tote bin washing. As identified by the facilities, the primary constituents of concern in these wastewaters are phosphoric acid and hydrogen sulfide which are readily controlled via neutralization. The management practices for these wastewaters do not allow for the release of phosphoric acid and hydrogen sulfide to the environment in an undiluted or unneutralized state. Table III–21 summarizes our information on these wastewaters:

TABLE III–21.—WASTEWATERS FROM PHOSPHORUS PENTASULFIDE PRODUCTION

Waste category	Number of reported generators	1998 Volume (MT)	Reported hazard codes	Sequential management practices
Process scrubber water	1	77,377	none	(1) Sewer, (2) POTW
Caustic scrubber water	2	2,177	none	(1) Covered tanks, (2) off-site treatment, (3) NPDES; (1) Treatment in covered tanks, (2) POTW.
Tote bin wash water	2	188	(1) D003 (2) none	(1) Covered tanks, (2) off-site treatment, (3) NPDES; (1) Treatment in covered tanks, (2) POTW.

We assessed the management practices for these wastes and determined that no exposure pathway of concern exists. Thus, we propose not to list these wastes as listed hazardous wastes under RCRA. The covered tanks employed minimize potential for releases to groundwater and air. Discharges to surface waters under NPDES are exempt from RCRA regulation. Discharges to POTWs via the facility's common sewage line are excluded from RCRA (40 CFR 261.4(a)(1)(ii)).

(3) Scrap sulfur. One facility reported generation of scrap sulfur that occasionally exhibits the characteristic of TC for lead. This sulfur is managed as hazardous in a Subtitle C incinerator. The 1998 waste volume was 0.12 MT.

We do not believe this material warrants listing as hazardous waste and, therefore, propose not to list this waste as hazardous under RCRA. While this waste category was reported to periodically exhibit a characteristic, the generator always manages the waste in a Subtitle C incinerator. We believe this management practice is likely to continue because the cost to treat it as hazardous is low for such a small volume wastes, and because the waste may be TC hazardous as generated. This waste is also small volume and highly unlikely to present a significant risk.

9. Phosphorus Trichloride

a. Summary. We have evaluated the wastes from the production of phosphorus trichloride and propose not to list any wastes from this process as hazardous wastes. These wastes do not meet the criteria set out at 40 CFR 261.11(a)(3) for listing a waste as hazardous. They do not pose a substantial present or potential threat to human health or the environment. We have identified no risks of concern associated with the current management of these wastes.

b. Description of the phosphorus trichloride industry. Six facilities in the United States reported producing phosphorus trichloride in 1997 or 1998. We are assessing wastes from the five facilities that still produce this product.[41]

Phosphorus trichloride is used as an intermediate in the production of a variety of chemicals. These chemicals are used to make pesticides, herbicides, antiscaling additives, corrosion inhibitors for cooling towers and heat exchangers, surfactants, sequestrants, and textile-treating agents. Phosphorus

[41] One facility discontinued production as of November 1999 and has no future plans to resume production of phosphorus trichloride. This facility's wastes therefore are not included in the following overview, but were evaluated to determine their potential threat to human health or the environment. The details of this facility's waste generation and management practices are included in the ''Phosphoric Acid Listing Background Document for the Inorganic Chemical Listing Determination.''

trichloride is used as a raw material in the production of chemicals that are used extensively as lubricating oil additives to control corrosion and as antioxidants and flame retardants in plastics.

Phosphorus trichloride (PCl_3) is a clear, volatile liquid with a pungent, irritating odor. Phosphorus trichloride is produced by one basic process. Liquid phosphorus and chlorine gas are continuously introduced into a reaction vessel. The phosphorus trichloride vapor phase is purified in a packed column and then liquified in a condenser. Most raw material impurities remain in the reactor and are removed as solid waste periodically during unit turnaround. Some facilities filter the product before shipment to ensure there is no dirt or other particles in the final product.

A scrubber is used to collect materials from various points in the process. For example, hydrochloric acid and phosphorus acid (H_3PO_3), the hydrolysis products of phosphorus trichloride vapors are vented to the scrubber from the reactor. Also, phosphorus trichloride vapor generated during transfer of the product into shipping containers is collected and vented to the same scrubber. The wastewater generated from the scrubber(s) is commingled with miscellaneous wastewaters (*e.g.,* reactor washout, spent filter wash, process area wash water) and sent for treatment. Some facilities generate a wastewater treatment sludge from the cleanout of treatment tanks. All of these facilities produce a variety of other products that are outside the scope of today's rule, and they commingle the wastewaters from PCl_3 production with wastewaters from other processes.

c. What kinds of wastes are generated by this process?. We have organized our discussion of these wastes in terms of how they are currently managed: characteristic wastes, wastewaters, recycled phosphorus, and non-characteristic non-wastewaters. The wastes generated by this process include:

—Reactor cleanout sludge consists of impurities from the elemental phosphorus and chlorine raw materials, including high boiling impurities such as arsenic trichloride that are retained in the reactor. These materials are sent to Subtitle C incinerators.

—Initial washout water from reactor is generated as a result of rinsing out the reactor after sludge removal. In one case, the reactor is cleaned with hot water only and there is no initial sludge removal step. These materials are treated and discharged to an POTW and under a NPDES permit.

—Product storage tank cleanout with nonreactive phosphate ester is the rinsate generated from cleaning the storage tank or equipment. When this rinse is done, the rinsate is drummed for off-site disposal as a hazardous waste.

—Product storage tank cleanout with water is generated as a result of additional rinsing that follows phosphate ester rinsing. This potentially acidic rinse water is sent to wastewater treatment for neutralization.

—Spent filter washwater for product is generated as the result of washing the spent filters used to remove dirt and particles from the product. This wash water is mixed with other wastewaters and sent to wastewater pretreatment.

—Process area wash water consists of pad washdown/rain water and any spilled material collected in contained areas. This wash water is mixed with other wastewaters and sent to wastewater pretreatment.

—Final washout water from reactor is the rinsate from additional reactor washing after sludge removal. The one facility reporting this rinsate commingles it with other wastewaters prior to wastewater pretreatment.

—Caustic scrubber water consists of small amounts of sodium salts and residual caustic. Phosphorus trichloride, acid vapors, traces of chlorine and carbon dioxide are vented from various points of the process. The vent releases mixed with air are scrubbed before the air is released to the atmosphere. The spent scrubber charge is sent along with other wastewaters to wastewater pretreatment.

—Process scrubber water consists of a weak acidic solution from scrubbing residual gases from distillation and from various storage tank vents.

—Spent filters for product are generated due to filtering dirt and other particles from the product before shipment. The filters are washed and dried before disposal.

—Wastewater treatment sludges are generated when wastewaters from the phosphorus trichloride and other processes are biologically treated. These sludges are only marginally derived from phosphorus trichloride wastewaters due to commingling with large volumes of other non-phosphorus trichloride wastewaters. The solids that are removed by filtration are landfilled.

One facility reported recycling three secondary materials: phosphorous storage tank sediment; phosphorous transfer water; and absorber residual. The phosphorous storage tank sediment is generated periodically when the phosphorus storage tanks are cleaned. Because the material is stored in containers prior to being sent off-site for recovery of phosphorus we found low potential for significant exposure from on-site storage. The phosphorous recovery process is outside the scope of the consent decree so we did not evaluate its wastes. At this same facility, raw material phosphorous is unloaded from rail cars and conveyed through the facility using a closed pressurized piping system that uses water to push the phosphorous in the piping system. To unload the phosphorous from each rail car, water is pumped into the rail car to push the phosphorous out. Because the phosphorous/water filled rail cars are then returned to the phosphorous manufacturers, where the phosphorous is then recovered, we found no potential for significant exposure, and did not evaluate this material further. The third instance of recycling at this facility, gases vented from the product check, storage tanks, and reflux separator are collected in an absorber. The vapors from the absorber are captured in a caustic scrubber and sent to wastewater treatment (see wastewaters in section d(2) below). According to the facility, the non-vapor phosphorous trichloride residual from the absorber is collected and piped to a non-consent decree production process where the phosphorous trichloride is incorporated into the non-consent decree product. Because this material is piped from the phosphorous trichloride process to the non-consent decree process, and there is no significant potential for exposure, we did not evaluate this residual further.

d. Agency evaluation. We have organized our discussion of these wastes in terms of how they are currently managed: characteristic wastes, non-characteristic wastewaters, and non-characteristic solid wastes.

(1) Wastes that are characteristically hazardous wastes. Many of the phosphorus trichloride producers stated that a number of their wastes exhibit RCRA characteristics. These wastes are hazardous wastes because they exhibit the characteristics of ignitability, corrosivity, reactivity or toxicity. The Toxicity Characteristic was reported for arsenic, cadmium, chromium, lead, mercury, selenium or silver.

These characteristic wastes are subject to the applicable LDR standards. Furthermore, these wastes are

ultimately disposed in Subtitle C management units or as discharges regulated under the Clean Water Act. We believe that the applicable Subtitle C and Clean Water Act regulations adequately protect against mismanagement.

Table III–22 summarizes our information about these wastes.

TABLE III–22.—CHARACTERISTIC WASTES FROM PHOSPHORUS TRICHLORIDE PRODUCTION

Waste category	Number of reported generators	1998 Volume (MT)	Reported hazard codes	Sequential management practices
Reactor cleanout sludge	4	[1] 66	D001–004, D006–009, D010, D011.	(1) container (2) Subtitle C incineration
Initial washout water from reactor	4	[1] 478	(1) D002, D004, D006, D007. (2) D002, D004 (3) D004, D007	(1) off-site pretreatment, (2) POTW; (1) neutralized in tanks, (2) surface impoundment, (3) biotreat in tank, (4) NPDES; (1) tank, (2) off-site biotreatment, (3) NPDES
Product storage tank cleanout with nonreactive phosphate ester.	1	10	D002, D003	(1) container (2) Subtitle C incineration
Product storage tank cleanout with water	1	15	D002	(1) neutralized in tanks, (2) NPDES
Spent filter wash for product	1	15	D002	(1) pretreatment in tanks, (2) NPDES
Process area wash water	1	1,400	D002	(1) tanks, (2) NPDES

[1] Volumes from 1996 or 1997 are included in the totals when the wastes were not generated by a facility in 1998.

For all but one of the wastes in the above table, the generators report managing these materials as hazardous from the point of generation through disposal (or the point at which they become discharges to surface water regulated under NPDES or POTW regulations). We believe these wastes are sufficiently regulated such that mismanagement is unlikely. Thus, we propose not to list these seven waste categories.

One facility appears to treat initial washout reactor water in tanks and then pass it through a nonhazardous waste surface impoundment. (All other units used to manage this waste have RCRA permits or are exempt from permitting.) While we have no analytical data on the treated waste that enters the impoundment, we do not believe this waste is likely to pose significant risk. The waste is generated infrequently (once a year) and combined with wastewaters from other processes. Based on information supplied by the facility, we estimated that the washout water would be diluted at least a hundred-fold by the daily throughput to the wastewater treatment system. Any potential releases from the impoundment after dilution with other wastewaters would be unlikely to result in any significant long-term risk. Therefore, we believe that this specific waste also does not pose significant threats to human health or the environment.

(2) Non-characteristic wastewaters. Wastewaters are generated at various points in the process as a result of scrubbing operations, equipment cleanup, and washing the process area. According to the data submitted by the facility, the primary constituents of concern in these wastewaters are hydrochloric acid and phosphorous acid, which are readily controlled via neutralization. The management practices for these wastewaters minimize opportunities for the release of hydrochloric acid or phosphorous acid to the environment in an undiluted or unneutralized state. Table III–23 summarizes our information on these wastewaters.

TABLE III–23.— WASTEWATERS FROM PHOSPHORUS TRICHLORIDE PRODUCTION

Waste category	Number of reported generators	1998 Volume (MT)	Reported hazard codes	Sequential management practices
Final washout water from reactor	1	not reported	none	(1) pretreatment in tanks, (2) POTW.
Caustic scrubber water	3	4,236 [1]	none	(1) pretreatment in tanks, (2) POTW or NPDES.
Process scrubber water	3	12,528 [1]	D002 (one facility).	(1) pretreatment or neutralized in tanks, (2) POTW or NPDES.

[1] Volumes from 1996 or 1997 are included in the totals when the wastes were not generated by a facility in 1998.

We have assessed the management practices employed for these wastes and determined that no exposure pathway of concern exists that warrants listing. We have determined that plausible management would be continued management in existing tank-based treatment systems. We believe the manufacturers have made a

considerable investment in wastewater treatment systems using tanks and will continue to use them. Further, we assumed that wastewater treatment tanks retain sufficient structural integrity to prevent wastewater releases to the subsurface (and therefore to groundwater), and that overflow and spill controls prevent significant wastewater releases. Thus, based on the lack of any significant likelihood of release of the constituents to groundwater, we did not project significant risks to groundwater from these wastes in the tank-based wastewater treatment scenario. Furthermore, discharges to POTWs and surface waters under NPDES are regulated under the Clean Water Act and are exempt from RCRA Subtitle C regulation and thus were not assessed.

We also considered the possibility of air releases from tanks. For most wastes, the constituents of concern are nonvolatile metals, making volatilization a very unlikely pathway of release from tanks. In addition, the facilities have installed tank covers, further reducing the likelihood of release to the air. As a result, we did not model releases to air from tanks from the production of phosphorus trichloride. Thus, we propose not to list these wastewaters as hazardous wastes under RCRA.

(3) Non-characteristic non-wastewaters. The phosphorus trichloride sector reported two waste categories that do not routinely exhibit any characteristic and that are often managed in Subtitle D landfills; these wastes are summarized in Table III–24.

TABLE III–24.—NON-CHARACTERISTIC SOLID WASTES

Waste category	Number of reported generators	1998 Volume (MT)	Reported hazard codes	Management practices
Spent filters for product	1	0.1	none	industrial Subtitle D landfill.
Wastewater treatment sludges	4	[1] 1,100	none [2]	Subtitle D landfill or Subtitle C landfill.

[1] Volumes from 1997 are included in the totals when the wastes were not generated by a facility in 1998.
[2] One facility reported that this wastewater treatment sludge is occasionally characteristically hazardous for D028 (dichloroethane), and the waste is then sent to a Subtitle C landfill. The dichloroethane is used in a process unrelated to the phosphorus trichloride process of interest in today's proposal.

The phosphorus trichloride product is filtered to remove PCl_4 and PCl_5. These compounds produce a slime on the product and are more viscous than the product. The facility washes the filters before sending them to disposal. The contaminants are easily washed off because of their ready solubility in water. The spent filters are generated in very small volumes. We are proposing not to list them because we do not expect the washed filters to contain significant levels of contaminants of concern.

All four of the facilities that generate wastewater treatment sludges commingle wastewaters from PCl_3 production with wastewaters from other processes. The wastewater contribution from the phosphorus trichloride process is very small compared to volumes of wastewaters from the other processes. Therefore, the phosphorus trichloride process does not contribute significant amounts of constituents to this sludge.

We do not believe any of these materials warrant listing as hazardous wastes from the production of phosphorus trichloride. Therefore, we propose not to list these wastes as hazardous wastes under RCRA in this rulemaking.

10. Potassium Dichromate

a. Summary. We evaluated the wastes from the production of potassium dichromate and propose not to list any wastes from this process as hazardous wastes under RCRA. These wastes do not meet the criteria set out at 40 CFR 261.11(a)(3) for listing as hazardous. They do not pose a substantial present or potential hazard to human health or the environment.

b. Description of the potassium dichromate industry. Potassium dichromate, which has a wide variety of industrial uses, was produced by a single facility in the United States in 1998. The U.S. demand for this chemical is very limited and has mostly been replaced by sodium dichromate for industrial use. Any demand not met by the U.S. facility is met by imports to U.S. distributors. Potassium dichromate is produced by reacting chromium trioxide with potassium hydroxide. The reactants are mixed in a reactor along with a crystal modifier. The potassium dichromate is crystallized, sent through a centrifuge to remove any remaining mother liquor, dried and packaged for sale. The single waste is filtered out from the mother liquor. The mother liquor is recycled back into the process.

c. What kinds of wastes are generated by this process? There is one waste category generated from this process: filter solids and spent filter media. According to data submitted by the facility, this waste typically contains 12.5 percent chromium. The facility reports the waste as hazardous for chromium and manages it as hazardous (D007). The reported waste volume for 1998 was 0.6 MT. The waste is stored on-site in drums and is shipped off-site to a commercial Subtitle C facility for stabilization to meet the land disposal restrictions (40 CFR 268.40 and 268.48) and final disposal in a Subtitle C landfill. Because the total chromium levels are so high, we believe this waste will always exhibit the toxicity characteristic.

d. Agency evaluation. We propose not to list this waste as hazardous under Subtitle C of RCRA. This waste is currently managed as hazardous from the point of generation through ultimate disposal because it is characteristically hazardous. The composition of the waste is such that it is likely to always be characteristic for chromium. The rules applying to characteristic wastes adequately protect against mismanagement.

11. Sodium Chlorate

a. Summary. We propose not to list any wastes from the production of sodium chlorate ($NaClO_3$) as hazardous under Subtitle C of RCRA. Process sludges, spent filters, wastewaters and hydrogen gas are generated from the production of sodium chlorate. These wastes and materials are managed in a variety of ways. After analysis of the management practices and potential exposure pathways of these wastes and materials, we concluded that there are no risk pathways of concern. These wastes and materials do not meet the criteria set out at 40 CFR 261.11(a)(3) for listing as hazardous. They do not pose a substantial present or potential hazard to human health or the environment.

b. Description of the sodium chlorate industry. There were ten facilities producing sodium chlorate in 1999. This industry manufactures sodium chlorate crystals and solutions from electrolysis of a sodium chloride brine.

Sodium chlorate is the raw material used for the production of chlorine dioxide, which is replacing chlorine and sodium hypochlorite to be used as an oxidizing bleaching agent by the pulp and paper industry. The replacement of elemental chlorine with chlorine dioxide reduces effluent emissions of dioxin formed in the bleaching process of paper and pulp. Approximately ninety-eight percent of sodium chlorate is used to generate chlorine dioxide. The other important use of sodium chlorate is as an intermediate in the production of other chlorates, perchlorates, and chlorites.

All ten facilities use a similar process in producing sodium chlorate. These facilities dissolve sodium chloride salt in water to create a liquid brine. The brine is treated to remove impurities, such as calcium carbonate and magnesium hydroxide. The treated brine is filtered and pumped into electrolytic cells. In the cells, sodium chloride is converted to chlorine and sodium hydroxide which further react to form sodium chlorate and hydrogen gas. This reaction is catalyzed by sodium dichromate. Sodium chlorate is then treated with heat and urea to remove residual sodium hypochlorite. Sodium chlorate is then processed further for crystallization, centrifuging, drying, and packaging. A more complete discussion of this process and the industry can be found in ''Sodium Chlorate Listing Background Document for the Inorganic Chemical Listing Determination'' in the docket for today's proposal.

c. What kinds of wastes are generated by this process? Wastes generated from the production of sodium chlorate consist of process sludges, spent filters and wastewaters. Based on an evaluation of survey responses from the ten sodium chlorate producers, we divided the wastes further into six general waste categories based on the presence or absence of chromium and lead. The sodium chlorate industry in general characterizes wastes that have been in contact with chromium or lead as hazardous (D007 or D008). Chromium is introduced into the process by the addition of sodium dichromate into electrolytic cells to protect electrodes from corrosion and to improve product yields. The presence of lead in the wastes results from the deterioration of anodes that can be used in the electrolytic cells. The six waste categories are:

—Process sludges with chromium or lead. These include electrolytic cells sludge, product filter press sludge, and those brine treatment sludges generated from purification where brine is formed by mixing salts with chrome-laden wastewaters recycled from various steps of the process.

—Process sludges without chromium and lead. These wastes include filter press sludge or drum sludge from treatment of brine, when recycled chrome-laden wastewater is not used in the brine dissolution step.

—Spent filters with chromium or lead. The filters are generated at several points in the production process, but most are generated after the electrolysis of the brine solution when the mother liquor is filtered to remove impurities.

—Spent filters without chromium and lead. Examples include disposable cartridge and sock filters from treatment of brine, when recycled chrome-laden wastewater is not used in the brine dissolution step.

—Wastewaters with chromium that are not recycled back to the process.

—Other wastewaters that do not contain chromium or lead and are not recycled (condensate, cooling water, and ion-exchange wastewater).

In addition to these wastes, other materials are produced by all ten facilities during the production of sodium chlorate that are piped directly back to the production process. Scrubber waters and filtrates are piped to on-site sodium chlorate production units for use. Because these materials are managed prior to reuse in ways that present low potential for releases to the environment, and because we evaluated process wastes generated after they are reused, we do not believe that these secondary materials present significant threats. At all ten facilities, hydrogen gas is produced by the electrolysis units and is either piped to on-site boilers, vented, or in one case, piped to a compression plant where it is compressed and sold. Because the material is a gas produced from a production unit rather than a waste management unit and is conveyed to its destination via piping, the gas is not a solid waste. RCRA Section 1004(27) excludes non-contained gases from the definition of solid waste and thus they cannot be considered a hazardous waste. (See 54 FR 50973) Because the gaseous materials are not solid wastes when produced, we did not evaluate them further for purposes of listing.

One facility reports generating a wastewater (sulfate solution) from brine treatment. The wastewater is transported to an off-site facility and used in their black liquor pulping process. The sulfate solution is added to black liquor for use in a wood digester. The process in the digester is outside the scope of the consent decree and we have not evaluated risks from wastes that it produces. We note, however, that the reuse of black liquor is excluded from regulation (40 CFR 261.4(a)(6)). The sulfate solution is stored in tanks prior to use in the pulping process, which minimizes the potential for releases.

How Are These Wastes Currently Being Managed?

Table III–25 summarizes the six waste categories, waste characteristics, waste volumes, and their current management practices:

TABLE III–25.—WASTE FROM SODIUM CHLORATE PRODUCTION

Waste category (number of facilities)	Reported Waste Codes [1]	1998 Volume (MT)	Management practices
Process sludges with chromium or lead (10).	D001, D002, D007, D008	28,547	Nine facilities store the waste on site in containers and then send it to Subtitle C landfills or incinerators; one facility decharacterizes the waste in tanks before managing it in on-site surface impoundments. Two facilities did not report hazard codes.

TABLE III–25.—WASTE FROM SODIUM CHLORATE PRODUCTION—Continued

Waste category (number of facilities)	Reported Waste Codes [1]	1998 Volume (MT)	Management practices
Process sludges without chromium and lead (5 [2]).	none reported	1,886	Three facilities store the waste on site in containers and then send it off-site to municipal Subtitle D landfills; one facility stores the waste on a concrete pad with secondary containment before applying it to an on-site land farm; one facility stores the waste on site in containers and then sends it off-site to an industrial Subtitle D landfill; one facility stores the waste on site in containers before sending it off-site for recycling.
Spent filters with chromium or lead (7)	D001, D007, D008	82.9	All seven facilities classify the waste as hazardous; six send the waste to Subtitle C landfills or incinerators; one facility decharacterizes the waste on-site in tanks, stores it in a closed compactor, then ships the waste off-site to an industrial Subtitle D landfill.
Spent filters without chromium and lead (4).	none reported	3.52	Three facilities store the waste on site in containers and send it off-site to Subtitle D landfills. One facility stores the waste with process sludge in on-site containers and then sends it off-site to a Subtitle C facility for stabilization prior to disposal in a Subtitle C landfill.
Wastewaters with chromium that are not recycled back to the process (2).	D002, D007	26,736	One facility sends the wastewater to an off-site Subtitle C facility for treatment and disposal. One facility combines and treats the wastewater with other process wastewaters in tanks prior to discharge to on-site surface impoundments.
Other wastewaters that do not contain chromium or lead and are not recycled (condensate, cooling water, ion-exchange wastewater).	none reported	10,744 [3]	Discharged via NPDES permit or to a POTW.

[1] D001 (ignitability); D002 (corrosivity); D007 (chromium); D008 (lead).
[2] One facility contributes more than one residuals to this waste group.
[3] Two facilities did not report volumes of this wastewater.

d. Agency evaluation. We selected wastes from three facilities for sampling. As described in detail in ''Sodium Chlorate Listing Background Document for the Inorganic Chemical Listing Determination'' in the docket for today's proposal, we selected these facilities and wastes because based on the survey information collected, we believe that the wastes generated by these three facilities are fully representative of the wastes generated by this industry and their management practices.

We evaluated the characteristics and current management practices of each of the six waste categories. The details of our evaluation follow.

(1) Process sludge with chromium or lead.

How Is This Waste Managed?

The predominant source of process sludge with chromium or lead is from the periodic cleanout of electrolytic cells used to convert the brine solution to sodium chlorate. All ten facilities generate this waste. Seven facilities classify their wastes as characteristic and send it off-site to Subtitle C landfills or incinerators. Two facilities do not classify their wastes as characteristic but nevertheless send their wastes to Subtitle C landfills.

The tenth facility, located in Hamilton, Mississippi, reports this waste to be characteristic and treats it in tanks to reduce hexavalent chromium to the relatively stable trivalent state. The facility commingles this sludge with wastes from the production of titanium dioxide (TiO_2) in these tanks. The treated mixture is subsequently managed in a series of four surface impoundments, three of which are lined with leachate collection systems. Today's proposal separately addresses the titanium dioxide wastes that are commingled with this sodium chlorate sludge (see section III.F.14.c.(14)).

How Was This Waste Characterized?

We collected a total of six samples to assess this waste categories. Three samples of the sludge from electrolytic cells were collected at two facilities where the wastes were destined for Subtitle C treatment and disposal. These two facilities generate and manage this waste as characteristically hazardous. These samples were part of the record characterizing this waste category, but were not used for risk assessment.

We collected another three samples from the Hamilton, Mississippi facility that classifies this waste as characteristically hazardous and treats it in tanks to remove the characteristic prior to pumping the effluent to on-site surface impoundments. One sample (KM–SC–01) reflects the untreated sodium chlorate sludge collected from a dedicated sump prior to commingling with the titanium dioxide wastewaters. The second sample (KM–SI–01) is the treated combined wastes collected at the inlet to the surface impoundments. The

third sample (KM–SI–04) is the treated commingled sludge collected from one of the on-site surface impoundments.

Table III–26, below, represents the analytical results for the Hamilton, Mississippi samples for total and hexavalent chromium, the primary constituent of concern. Total constituent analyses were conducted for the untreated waste. No other toxicants in the untreated wastewater sample (KM–SC–01) exceed the health-based levels. For the treated waste and the sludge collected from the impoundment, total and leaching analyses were conducted to allow us to assess potential releases to the environment. Our analytical data shows that total hexavalent chromium level in the treated sample (KM–SI–01) is below the HBL for hexavalent chromium, demonstrating the effectiveness of the treatment process. We assessed the treated commingled sludge settled in the impoundments and found that the chromium levels did not exceed the HBLs.

TABLE III–26.—ANALYTICAL DATA FOR SODIUM CHLORATE

Constituents of concern	KM–SC–01 (Untreated $NaC1O_3$ wastes only)	KM–SI–01 (Treated commingled $NaC1O_3$ and TiO_2 wastes)		KM–SI–04 (Treated commingled $NaC1O_3$ and TiO_2 sludge in impoundment)		HBL
	Total (mg/1)	Total (mg/kg)	SPLP (mg/l)	Total (mg/kg)	SPLP (mg/l)	
Chromium	0.99	31.1	<0.05	1,140	0.05	23
Hexavalent Chromium	0.85 L	<0.02	<0.02	<0.8	0.03	0.05

L: Concentration reported from analysis performed outside method recommended holding time. Value should be considered biased low.

The total chromium concentration in the treated waste is higher than the untreated waste due to commingling with other wastes from the titanium dioxide production process. There are other constituents detected in the treated commingled waste sample (KM–SI–01) that are attributable to the titanium dioxide production process; these constituents are assessed in section III.F.14.c.(14) of today's proposal.

What Is EPA's Listing Rationale for This Waste?

We propose not to list this waste category. Seven facilities consider wastes in this category to be characteristically hazardous (for D001, D002, D007 or D008) and manage the wastes under Subtitle C regulations. We believe that these regulations adequately protect against mismanagement. Two facilities do not classify their wastes as characteristic but send them to Subtitle C landfills. We also believe that this practice adequately prevents mismanagement. The remaining facility (which does not identify its sludges as characteristic hazardous wastes) treats the sludge in tanks to reduce hexavalent chromium to trivalent chromium prior to placement in on-site surface impoundments. We found that the waste did not pose risks during treatment because there are no exposure pathways of concern for the on-site treatment tanks. The wastes are treated in concrete tanks with secondary containment which minimize potential releases to groundwater. We also are not concerned with potential air releases from these tanks as neither volatile contaminants nor airborne particulates are likely to be present in the wastes. As discussed above, the primary constituent of concern in this waste is hexavalent chromium, which is treated to form relatively stable trivalent chromium. The physical form of the wastes (*i.e.,* sludge with high water content) eliminates the potential for a significant release of airborne particulates. Furthermore, our analytical data show that the waste, after treatment, does not contain any constituents of concern at levels exceeding health-based levels.

(2) Process sludge without chromium and lead.

How Is This Waste Managed?

This sludge is produced as part of the initial purification of the brine solution. Five facilities report generating this type of waste and managing it as nonhazardous. Four facilities manage the waste in an on-site land farm, off-site municipal Subtitle D landfills, and an industrial Subtitle D landfill. One facility ships their waste off-site for recycling.

We collected a total of four samples of this waste category from two facilities. Two of the four samples (HT–SN–01 and EC–SN–03) are representative of wastes that are land disposed. The other two samples (EC–SN–01 and EC–SN–02) are representative of wastes that are generally recycled and occasionally also landfilled. Table III–27 identifies the constituents of concern that we found to be present in the waste at levels exceeding their respective HBLs and/or soil screening levels.

TABLE III–27.—ANALYTICAL RESULTS FOR SODIUM CHLORATE PROCESS SLUDGE WITHOUT CHROMIUM AND LEAD (PPM)

Parameter	HT–SN–01			EC–SN–03			EC–SN–01			EC–SN–02			HBL	[1]SSL
	Total	TCLP	SPLP	Total	TCLP	SPLP	Total	TCLP	SPLP	Total	TCLP	SPLP		
Arsenic	14.3	[2]0.03	<0.05	<5	<0.005	<0.05	<5	<0.005	<0.05	<5	<0.005	<0.05	0.0007	5.2
Cadmium	27.4	<0.05	<0.05	<5	<0.05	<0.05	<5	<0.05	<0.05	<5	<0.05	<0.05	0.0078	4.3
Chromium	57.3	<0.05	<0.05	15.3	<0.05	<0.05	<5	<0.05	<0.05	10.1	<0.05	<0.05	23	37
Copper	17.2	<0.25	<0.05	15.3	<0.05	<0.05	<5	<0.25	<0.05	5.3	<0.25	<0.05	1.3	17
Lead	14.8	0.024	<0.03	139	<0.03	<0.03	19.3	0.12 E	0.001	34.9	0.05 E	0.002 E	0.015	400*
Manganese	69.2	0.08	<0.05	238	4.5	<0.05	125	0.5	<0.05	51.9	0.7	<0.05	0.73	330
Mercury	0.5 L	<0.002	<0.0002	<0.1	<0.002	<0.0002	<0.1	<0.002	<0.0002	<0.1	<0.002	<0.0002	0.0047	24*
Nickel	7.4	<0.2	<0.05	12.1	0.4	<0.05	<5	<0.2	<0.05	<5	<0.2	<0.05	0.31	13
Silver	1.1	<0.1	<0.01	<1	<0.1	<0.01	<1	<0.1	<0.01	<1	<0.1	<0.01	0.078	400*
Zinc	111	<2	<0.5	279	10.6	<0.5	<50	<2	<0.5	<50	<2	<0.5	4.7	48

[1] SSL: Soil Screening Level based on geometric mean background concentration (mg/kg) in soils in conterminous U.S. or soil ingestion HBL (marked *).
[2] Results are less than the typical laboratory reporting limit, but are greater than the calculated instrument detection limit.
E: Analysis performed outside recommended holding time. Reported value should be considered as estimated.

What Management Scenarios Did We Aassess?

We evaluated wastes managed under the four identified management scenarios: on-site land farm, municipal Subtitle D landfill, industrial Subtitle D landfill, and recycling.

Land farm scenario. One facility reports managing 37 MT/year of this waste in an on-site permitted land farm. EPA previously assessed this same land farm as part of the chlorinated aliphatics listing determinations (see proposed rule at 64 FR 46475, August 25, 1999). Today's assessment of sodium chlorate waste placed in the same unit is based on our earlier modeling of this unit for a waste from the production of chlorinated aliphatics (EDC/VCM sludges).

In assessing this management scenario, we first compared the total constituent concentrations of all four record samples to background soil concentrations. The following metals exceeded this screening criteria: arsenic, cadmium, chromium, copper, lead, mercury, silver, and zinc. We then used the metal modeling results generated from the chlorinated aliphatics listing determination to calculate the proportional sodium chlorate risk. The calculated modeling results of arsenic, cadmium, hexavalent chromium, and zinc for the same land farm are all below a hazard quotient (HQ) of 1 and 10^{-6} risk thresholds for the land treatment scenario. Finally, we compared the total concentrations of copper, lead, mercury, and silver of all samples to the soil ingestion HBL because these constituents were not assessed in the chlorinated aliphatics risk analyses. The maximum total concentrations of lead, mercury, and silver are well below the soil ingestion HBL, and the maximum total concentration of copper in this waste (*i.e.,* 17.2 mg/kg) is very close to the soil ingestion HBL (*i.e.,* 17 mg/kg). We believe that after mixing with soil in the land application unit, the copper concentration in the unit will be even lower. We do not believe this waste poses risk via volatilization to the air pathway because it does not contain any significant toxic volatile chemicals. In addition, the comparison described above for this unit, where we determined that the detected waste constituents are present in the waste at levels below or very close to the soil ingestion levels, suggests that any wind blown dust from the unit should not pose risk at levels of concern.

Based on our analysis, we conclude that the waste does not present a substantial risk to human health or the environment when land applied.

Landfill scenarios. Three facilities manage their wastes in municipal Subtitle D landfills and one facility manages its waste in an industrial Subtitle D landfill.

We used the SPLP results of all four relevant samples to evaluate the industrial Subtitle D landfill management scenario. We found that the waste poses no substantial present or potential hazard to human health and the environment when managed in an industrial Subtitle D landfill because the SPLP leachate concentration of all constituents of the four samples of this waste category are below their respective HBLs.

We used the TCLP results of all four relevant samples to assess the municipal Subtitle D landfill scenario. We modeled all three volumes reported being sent to municipal Subtitle D landfills. We focused our assessment on the geological regions in the northwestern and southeastern areas of the country because of the locations of the facilities and the landfills currently being used. The constituents we modeled are arsenic, lead, manganese, nickel, and zinc. The details regarding our modeling inputs and assumptions are provided in ''Sodium Chlorate Listing Background Document for the Inorganic Chemical Listing Determination'' and ''Risk Assessment for the Listing Determinations for Inorganic Chemical Manufacturing Wastes' in the docket for today's proposal. The results of our risk assessment are summarized below in Table III–28.

TABLE III–28.—GROUNDWATER PATHWAY RISK ASSESSMENT RESULTS FOR PROCESS SLUDGE WITHOUT CHROMIUM AND LEAD

Percentile	Arsenic		Manganese		Nickel		Zinc	
	Adult cancer risk	Child cancer risk	Adult HQ	Child HQ	Adult HQ	Child HQ	Adult HQ	Child HQ
90th	3E–08	2E–08	2E–04	4E–04	2E–06	3E–06	5E–08	1E–07
95th	2E–07	2E–07	6E–04	1E–03	2E–05	3E–05	5E–06	1E–05

Based on these risk assessment results, we conclude that process sludge without chromium and lead does not pose a substantial present or potential hazard to human health and the environment when managed in municipal Subtitle D landfills. We calculated hazard quotients for non-carcinogenic compounds (lead, manganese, nickel, and zinc), and all of these were well below a value of one. We found no adult or child cancer risk for arsenic in excess of 1E–06 at the 95th percentile. Based on these results we conclude that this waste does not pose risk to human health and the environment. For a more complete description of this analysis, see ''Risk Assessment for the Listing Determinations for Inorganic Chemical Manufacturing Wastes'' in the docket for this proposal.

Recycling scenario.—One facility ships their wastes to an off-site facility for reuse. The material is added to mined gypsum used to retard the setting of concrete. We assessed this use because it involves land placement, with higher likelihood of releases to the environment. Two samples of this waste category were collected from the facility that produces and manages this waste in such a fashion. We compared this use to a less protective landfarming scenario, which we modeled, and found no risk of concern. The volume of the waste is quite small (<1%) when compared to the volume of mined gypsum used by the off-site facility. We believe that the constituent concentrations in the final cement product would be even lower due to mixing with other materials.

What Is EPA's Listing Rationale For This Waste?

Based on our assessments of the four management scenarios (on-site land farm, municipal Subtitle D landfill, industrial Subtitle D landfill, and recycling), we found that the wastes do not present a substantial risk to human health or the environment. Therefore, we propose not to list these wastes.

(3) Spent filters with chromium or lead.

How Is This Waste Managed?

Spent filters are generated at several points in the production process but most are generated after the electrolysis of the brine solution. Seven facilities report generating this waste. Six of the seven facilities report this waste to be characteristic and ship it to off-site Subtitle C landfills or incinerators. The seventh facility generates a very small volume of D007 waste that is acid-washed and decharacterized (to meet UTS) before being landfilled at an off-site industrial Subtitle D landfill.

How Was This Waste Characterized?

We collected one sample of the spent filter that was decharacterized prior to being sent to an industrial Subtitle D landfill. We did not sample any of the six facilities that already adequately managed the waste under Subtitle C regulations. Table III–29 presents the analytical results for the total and leaching analyses of the decharacterized spent filter sample (KM–FB–01) for arsenic, lead, total chromium, and hexavalent chromium. Chromium and lead are the two primary constituents of concern in wastes of this category. The sample was not collected from the facility that uses anodes with lead coating, thus lead was not present in this sample. Arsenic was the only constituent detected in the SPLP analysis of this sample at levels exceeding the HBL.

TABLE III–29.—ANALYTICAL RESULTS FOR SPENT FILTERS WITH CHROMIUM (KM–FB–01)

Parameter	Total (mg/kg)	TCLP (mg/l)	SPLP (mg/l)	Drinking water HBLs (mg/l)
Arsenic	<0.5	<0.5	[1]0.005	0.0007
Chromium	41.0	<0.05	<0.05	20
Hexavalent Chromium	16.8	[2]NA	[2]<0.022	0.05
Lead	<5	<0.5	<0.03	0.015

[1] Results are less than the typical laboratory reporting limit, but are greater than the calculated instrument detection.
[2] NA Not applicable. Typical TCLP leaching solution is not suitable for leachable hexavalent chromium because most (or all) hexavalent chromium in TCLP waste leachates were converted to trivalent chromium. The leach test for hexavalent chromium was modified by replacing the typical (TCLP/SPLP) solution with deionized water.

What Is EPA's Listing Rationale For This Waste?

As previously noted, six of the seven generators of this waste report managing their wastes in Subtitle C facilities as characteristically hazardous from the point of generation through ultimate disposal. We did not conduct risk assessment on wastes identified as hazardous wastes and managed in Subtitle C facilities because listing would not provide any significant incremental control of wastes already managed under Subtitle C. We evaluated the small volume waste (*i.e.,* 2.3 MT/yr) generated by the seventh facility that decharacterizes its waste before landfilling in an industrial Subtitle D landfill.

Because the volume of this waste is relatively small, we used a screening analysis (described in section III.E.3) to screen the potential risk to groundwater associated with landfilling this waste. We found that the SPLP data for arsenic screens out because the volume of the waste generated by the facility is insufficient to release arsenic at levels of concern. For a more complete description of this analysis, see ''Risk Assessment for the Listing Determinations for Inorganic Chemical Manufacturing Wastes'' in the docket for this proposal.

Our analytical data demonstrate that the waste is effectively decharacterized and does not pose risks warranting listing for chromium, the primary constituent of concern in this waste. The result of the screening analysis for arsenic, the only constituent present in the waste's leachate at levels exceeding the HBL, shows that the arsenic in this waste does not pose risk to human health and the environment. Therefore, we propose not to list spent filters with chromium.

(4) Spent filters without chromium and lead.

How Is This Waste Managed?

This residual is usually generated as part of the initial brine purification steps, where impurities are removed from the brine solution, and from filtering of product during packaging. Four facilities report generating this type of waste. Two of these four facilities manage their wastes as nonhazardous in municipal Subtitle D landfills. One facility manages its waste as nonhazardous in an industrial Subtitle D landfill. One facility sends their spent filters along with process sludge off-site to a Subtitle C facility for stabilization prior to disposal in a Subtitle C landfill. These wastes are generated in very small volumes.

How Was This Waste Characterized?

We collected two samples (HT–FB–01 and HT–FB–02) from one facility. These two samples are representative of wastes in this category that are land disposed. We found that antimony, arsenic, boron, hexavalent chromium, and lead in the TCLP or SPLP waste leachates exceeded their HBLs. We also found that cadmium was not detected in the leachates at a detection level of six times higher than its HBL. The detection limit was high due to dilution to minimize sample matrix interferences. Information on constituents of concern is summarized in Table III–30.

TABLE III–30.—ANALYTICAL RESULTS FOR SPENT FILTERS WITHOUT CHROMIUM OR LEAD

Parameter	HT–FB–01			HT–FB–02			HBL (mg/l)
	Total (mg/kg)	TCLP (mg/l)	SPLP (mg/l)	Total (mg/kg)	TCLP (mg/l)	SPLP (mg/l)	
Antimony	34.1	0.018	<0.005	<5	0.012	<0.005	0.006
Arsenic	7.3	0.014	0.003	5.3	<0.005	<0.005	0.0007
Boron	<50	6.1	<0.05	<50	0.67	<0.5	1.4
Cadmium	22.5	<0.05	<0.05	<5	<0.05	<0.05	0.008
Cr, +6	<0.8	NA	<0.02	2.8 L	NA	0.19 L	0.05

TABLE III–30.—ANALYTICAL RESULTS FOR SPENT FILTERS WITHOUT CHROMIUM OR LEAD—Continued

Parameter	HT–FB–01			HT–FB–02			HBL (mg/l)
	Total (mg/kg)	TCLP (mg/l)	SPLP (mg/l)	Total (mg/kg)	TCLP (mg/l)	SPLP (mg/l)	
Lead	8.7	0.024	0.06	7.1	0.020	0.012	0.015

L: Concentration reported from analysis performed outside required holding time. Value should be considered biased low.

What Management Scenarios Were Assessed?

We modeled both the industrial (0.6 MT/year) and municipal (2.8 MT/year) landfill scenarios, based on the reported management practices.

We used the SPLP leachate concentrations to evaluate the industrial landfill scenario. The constituents of concern that exceeded their respective HBLs in the SPLP results were arsenic, hexavalent chromium, and lead. We evaluated these constituents using the de minimis volume screening analysis, as described in section III.E.3 of today's proposal. The analysis suggests that hexavalent chromium and lead are not of concern. We then modeled arsenic using our standard groundwater model for the industrial landfill scenario.

We used the TCLP leachate concentrations to evaluate the municipal landfill scenario. Using the de minimis volume analysis, we screened out boron, hexavalent chromium, and lead. We then conducted full groundwater modeling for the municipal scenario for antimony, arsenic, and cadmium.

What Are the Results of EPA's Risk Assessment for This Waste When Managed in an Industrial Subtitle D Landfill?

Our risk assessment results for the industrial landfill scenario, summarized below in Table III–31, suggest that the only constituent of concern that required modeling (arsenic) does not pose a substantial present or potential hazard to human health and the environment. We found no arsenic cancer risk in excess of 1E–08 at the 95th percentile for either adult or child exposure scenarios. Therefore, we believe that this waste when managed in industrial Subtitle D landfills clearly does not warrant listing. For a more complete description of this analysis, see ''Risk Assessment for the Listing Determinations for Inorganic Chemical Manufacturing Wastes'' in the docket for this proposal.

TABLE III–31.—RISK RESULTS FOR FILTERS WITHOUT CHROMIUM AND LEAD—INDUSTRIAL SUBTITLE D LANDFILL SCENARIO

Percentile	Arsenic	
	Adult cancer risk	Child cancer risk
90th	1E–09	8E–10
95th	5E–09	4E–09

What Are the Results of EPA's Risk Assessment for This Waste When Managed in Municipal Subtitle D Landfills?

Our risk assessment results for the municipal landfill scenario, summarized below in Table III–32, suggest that the three constituents of concern (antimony, arsenic, and cadmium) do not pose a substantial present or potential hazard to human health and the environment. The hazard quotients, for both the adult and child exposure scenarios, of antimony are less than 0.01 at the 95th percentile, and of cadmium, are less than 0.001 at the 95th percentile. We found no arsenic cancer risk in excess of 1E–08 at the 95th percentile for either adult or child exposure scenarios. Therefore, we believe that this waste when managed in municipal Subtitle D landfills does not warrant listing. For a more complete description of this analysis, see ''Risk Assessment for the Listing Determinations for Inorganic Chemical Manufacturing Wastes'' in the docket for this proposal.

TABLE III–32. RISK RESULTS FOR FILTERS WITHOUT CHROMIUM AND LEAD MUNICIPAL SUBTITLE D LANDFILL SCENARIO

Percentile	Antimony		Arsenic		Cadmium	
	Adult HQ	Child HQ	Adult cancer risk	Child cancer risk	Adult HQ	Child HQ
90th	5E–04	1E–03	5E–10	4E–10	3E–05	6E–05
95th	2E–03	4E–03	5E–09	4E–09	1E–04	3E–04

(5) Wastewaters with chromium that are not recycled back to the process.

How Is This Waste Managed and How Is It Characterized?

Two facilities report generating this wastewater and characterize it as hazardous (D002 and D007). One facility generates 11 MT per year of this wastewater from its on-site laboratory testings of the electrolyte in the electrolytic cells, the excess caustic from the hydrogen purification step, and the wastewater from the production of sodium chlorate crystals. The facility stores the wastewater on-site in closed tanks before sending it off-site to a hazardous waste facility for treatment and disposal. The other facility generates 26,725 MT per year of this wastewater from acid washing filters and anodes to remove buildup of trace metals on the surface. The facility combines the wastewaters with the wastewaters from its titanium dioxide production process and treats the commingled wastewaters in tanks. The treated wastewater is then discharged to on-site surface impoundments.

What Is EPA's Listing Rationale for This Waste?

One facility identifies the waste as hazardous and manages it in accordance with Subtitle C regulations. We believe that applicable Subtitle C regulations adequately protect against mismanagement, and we did not investigate it further.

For the other facility, in Hamilton, Mississippi, we evaluated its combined wastewaters and solids as described above in the ''process sludges with chromium or lead'' category. Today's proposal separately addresses the titanium dioxide wastes that are commingled with this sodium chlorate waste. We propose not to list these wastes.

(6) Other wastewaters that do not contain chromium or lead and are not recycled.

How Is This Waste Managed?

There are other wastewaters generated from several points of the process, including process condensate, cooling waters, and ion-exchange wastewater. Four facilities reported generating these wastewaters. Two facilities generate process condensates from condensing water vapor from their crystalizers, steam jets, or pad water evaporator. Both facilities store their process condensates in closed tanks. One facility neutralizes the condensate prior to discharging it to an NPDES permitted outfall. The other facility does not treat the condensate, but tests to ensure it meets its State Pollutant Discharge Elimination System permit prior to discharge to a river. One facility generates wastewater from regeneration of the ion-exchange unit that is used for purification of the brine. The wastewater is collected in a tank for pH neutralization before it is discharged to a POTW. One facility generates wastewater from cooling tower blowdown, chemical storage tank scrubber pad, hydrogen scrubber pad, and water demineralization area. These wastewaters are piped to its on-site NPDES facility to be processed and discharged.

What Is EPA's Listing Rationale for This Waste?

We propose not to list these wastewaters as hazardous. We evaluated these wastewaters that are stored and treated in tanks or in a NPDES permitted facility. We found that these wastewaters do not pose risks warranting regulation during treatment because there are no exposure pathways of concern. The wastewater treatment tanks and the wastewater treatment facility provide sufficient structural integrity and have secondary containment areas to minimize potential releases to groundwater. We are unlikely to find potential air releases from these tanks or the permitted facility as neither volatile contaminants nor airborne particulates are likely to be present in these wastewaters.

12. Sodium Dichromate

a. Summary. We have evaluated the wastes, waste management practices, and potential risk exposure pathways associated with the sodium dichromate production processes and propose not to list any wastes from this industry as hazardous wastes under Subtitle C of RCRA. These wastes do not meet the criteria listed under 40 CFR 261.11(a)(3) for listing a waste as hazardous. They do not pose a substantial present or potential threat to human health or the environment. We have identified no risks of concern associated with the current management of these wastes. Note that certain wastes from this sector are exempt mineral processing wastes which are not within the scope of today's listing proposal.

b. Description of the sodium dichromate industry. Two facilities in the United States produce sodium dichromate; one in North Carolina and one in Texas. Both facilities sell their product on the open market in addition to using the material as a feedstock for various manufacturing processes on-site. The majority of sodium dichromate is used as a feedstock for the production of chromic acid. It is also used in a wide variety of other uses. For more detailed information concerning this industry, *see* ''Sodium Dichromate Listing Background Document for the Inorganic Chemical Listing Determination'' in the docket for today's proposal.

The two sodium dichromate production facilities use somewhat different manufacturing processes and generate somewhat different wastes. Both facilities use imported chromite ore as their primary feedstock. They dry and grind the ore and feed it into a roasting kiln or hearth with other materials such as soda ash, lime, and sodium hydroxide. The facilities roast, then quench and leach the ore with water, producing sodium chromate solution and solid ore residues. Both facilities return the ore residues to the manufacturing process for further roasting and leaching. The facilities purify the resulting sodium chromate solution product stream by adjusting its pH, treating it with sodium carbonate, and, at the Texas facility, sodium dichromate, and filtering out the resulting solid impurities.

The two facilities' processes diverge significantly at this point. At the Texas facility, the sodium chromate solution is either crystallized and sold or processed electrolytically to convert the sodium chromate to sodium dichromate. The electrolytic cell system also produces sodium hydroxide solution which, the facility reports, they sell. The North Carolina facility converts the sodium chromate solution to sodium dichromate through acidification, and the sodium dichromate is then partially evaporated. The acidification process also produces sodium sulfate and lower purity sodium sulfate ''saltcake,'' both of which the facility sells. The sodium dichromate is then either used in liquid form or further evaporated to produce a crystalline product.

c. How does the Bevill Exclusion apply to wastes from the sodium dichromate manufacturing processes? The sodium dichromate manufacturing facilities produce two types of residuals which are eligible for the Bevill exemption once disposed: beneficiation wastes (See 40 CFR 261.4(b)(7)(i)) and mineral processing wastes referred to as treated residue from roasting/leaching of chromium ore (see 40 CFR 261.4(b)(7)(ii)(N)).

Under the Bevill exemption, any wastes generated from beneficiation of ores, such as crushing, mixing, and milling, are Bevill exempt. Both facilities beneficiate ore by drying and grinding chromite ore and mixing the ore with other ingredients prior to placement in the roasting kiln and generate air pollution control dusts from these processes. However, the residuals from these processes, which would be Bevill exempt, are not disposed of but rather captured and returned to the process from which they originated for chromium recovery.

In terms of when beneficiation stops and mineral processing starts, EPA determined in 1989 that the roasting/leaching of chromium ore to produce sodium chromate is mineral processing rather than beneficiation. 54 FR 36592 (September 1, 1989) stated:

''A specific exception to the above categorization system applies when the roasting/leaching sequence produces a final or intermediate product that does not undergo further beneficiation or processing steps (*e.g.,* the leach liquor serves as an input to inorganic chemical manufacturing). In this type of situation, the Agency believes that the operation is most appropriately considered a processing, rather than a beneficiation, operation. In the context of this rulemaking, one candidate Bevill waste (roast/leach ore residue from primary chrome ore processing) is affected by this distinction; EPA believes that this material is clearly a waste from

processing, rather than beneficiation, of an ore or mineral.''

The wastes generated after mineral processing begins are not Bevill exempt unless and until they become treated residue from the roasting/leaching of chromium ore as specified in 40 CFR 261.4(b)(7)(ii)(N). The wastes eligible for the exclusion, once they are treated, are referred to later in this preamble and associated background documents as spent post-leach, spent post-neutralization ore residue, and waste heat boiler washout. These wastes are generated from roasting and leaching (including precipitation and filtration to remove the resulting impurities) of chromite ore. Both facilities generate these wastes, treat them in on-site treatment systems, and dispose of them in on-site surface impoundments. Note that in the January 23, 1990 **Federal Register**, EPA stated that the Bevill exemption applies to ''only those solids which are entrained in the slurry as it leaves the treatment facility and which settle out in disposal impoundments.''

Wastes generated following the roasting/leaching processes to produce sodium chromate for sodium dichromate production are not Bevill exempt because they are not from the roasting/leaching of chromite ore. Wastes generated at these facilities that are not Bevill exempt include sodium chromate evaporation unit wastewaters (Texas facility), sodium dichromate evaporation unit wastewaters (Texas facility), caustic filter sludge (Texas facility), and salt cake drier scrubber wastewater (North Carolina facility).

As described below, both facilities in the sodium dichromate manufacturing industry commingle wastes during the treatment process, ultimately producing a commingled treatment residue which is a mixture of Bevill exempt wastes and wastes which do not qualify for the Bevill exemption. In general, the majority of these mixtures consist of Bevill exempt wastes. Mixing Bevill exempt wastes with non-hazardous wastes does not affect the regulatory status of the Bevill wastes, but it also does not conversely extend Bevill exempt status to the non-hazardous wastes in the mixture (see 63 FR 28595). Therefore, in this rulemaking we have addressed that portion of the treatment residue mixture which derives from wastes which do not qualify for the Bevill exemption. In addition, in general, if any of the non-Bevill wastes exhibit a characteristic and is mixed with the Bevill wastes, the entire mixture may become subject to Subtitle C based on the Bevill mixture rule (See 40 CFR 261.3(a)(2)).

d. What kinds of wastes are generated by these processes? Table III–33 below briefly lists the facility-reported residuals from the sodium dichromate manufacturing industry, total industry residual volumes generated in 1998, RCRA hazard codes, and residual management practices.

TABLE III–33.—SODIUM DICHROMATE PRODUCTION RESIDUALS

Waste category	1998 volumes (MT)	Reported waste codes	Sequential management practices
North Carolina Facility			
Residuals commingled in spent ore residue treatment unit [1]:			
Spent post-neutralization ore residue (Bevill exempt after treatment).	146,937	D007	Sent on-site to tank-based spent ore residue treatment unit with NPDES permitted discharge.
Spent post-leach ore residue (Bevill exempt after treatment).	25,930	D007	Sent on-site to tank-based spent ore residue treatment unit with NPDES permitted discharge.
Saltcake drier scrubber wastewater	13,851	D007	Sent on-site to tank-based spent ore residue treatment unit with NPDES permitted discharge.
Waste heat boiler washout (Bevill exempt after treatment).	70	D007	Sent on-site to tank-based spent ore residue treatment unit with NPDES permitted discharge.
Residuals disposed of on-site:			
Reduced chromium treatment residues (commingled Bevill exempt and non-exempt residues).	129,503	None	Sent to on-site industrial Subtitle D disposal unit.
Commingled treated wastewaters (commingled Bevill exempt and non-exempt residues).	920,161	None	Passed through sand filters then discharged directly under NPDES permit or sent to on-site industrial Subtitle D disposal unit.
Residuals disposed of off-site:			
Chromium-contaminated filters, membranes, and other plant waste.	67	D007	Stored in on-site roll-off bin before off-site treatment and landfill disposal at Subtitle C facility.
Spent sand filter sands (commingled Bevill exempt and non-exempt residues).	21.7 (1997)	None	Stored in on-site drums or roll-off bins before disposal in off-site industrial Subtitle D landfill.
Texas Facility			
Residuals commingled in spent ore residue treatment unit:			
Spent post-neutralization ore residue (Bevill exempt after treatment).	60,000	D007	Sent to on-site, covered, tank-based, spent ore residue treatment unit with NPDES permitted discharge.
Caustic filter sludge	80	D002	Sent to on-site, covered, tank-based, spent ore residue treatment unit with NPDES permitted discharge.
Residuals commingled in wastewater treatment unit [2]:			
Sodium dichromate evaporation unit wastewater	~2,500	None	Sent to on-site, tank-based wastewater treatment unit with NPDES permitted discharge.
Sodium chromate evaporation unit wastewater	~300	None	Sent to on-site, tank-based wastewater treatment unit with NPDES permitted discharge.

TABLE III–33.—SODIUM DICHROMATE PRODUCTION RESIDUALS—Continued

Waste category	1998 volumes (MT)	Reported waste codes	Sequential management practices
Residuals disposed of on-site:			
Reduced chromium treatment residues from spent ore residue treatment unit (commingled Bevill exempt and non-exempt residues).	60,000	None	Sent to on-site industrial Subtitle D, double-lined surface impoundment for dewatering and disposal. Impoundment has NPDES permitted outflow.
Reduced chromium treatment residues from wastewater treatment unit (commingled Bevill exempt and non-exempt residues).	~30,000 (1999)	None	Sent to on-site industrial Subtitle D, double-lined surface impoundment for dewatering and disposal. Impoundment has NPDES permitted outflow.
Commingled treated wastewaters (commingled Bevill exempt and non-exempt residues).	186,515	None	Sent to on-site industrial Subtitle D surface impoundment, filtered through sand filters, then discharged directly under NPDES permit.
Residuals disposed of off-site:			
Process filters and membranes, baghouse bags, chromium-contaminated empty containers, and other plant wastes.	24	D007	Stored in on-site roll-off box before treatment and landfill disposal at Subtitle C facility.
Spent sand filter sands (commingled Bevill exempt and non-exempt wastes).	~2 MT once every two years.	None	Placed in on-site non-hazardous soil waste bin and then disposed of in off-site industrial Subtitle D landfill.

[1] Remediation well water, cooling tower blowdown, and stormwater are also treated in this unit. These materials are beyond the scope of this listing determination.
[2] Stormwater and remediation well water are also treated in this unit. Contaminated media are not within the scope of this listing determination.

In addition to these wastes, the sodium dichromate manufacturers produce residuals which are either piped back to the production process or sold for use in other manufacturing processes. Air pollution control devices capture materials that are returned to their units of origin or to other manufacturing process units. At the North Carolina facility, ore residue washwaters and calcium carbonate residuals are returned to the production process for chromium recovery. Chromium-bearing solution from the saltcake purification process is directly reused in the roasted ore quench, leach and filter process. At the Texas facility, chromium-containing residuals from scrubbers on the hearth and on the sodium chromate and dichromate evaporation/crystallization units are reused in the hearth kiln and quench tank units. Because these materials are reused in production units in ways that present low potential for release, and because we evaluated process wastes generated after the secondary material is reinserted into the process, we do not believe that these materials present significant risk.

The North Carolina facility also produces for sale sodium sulfate ''saltcake'' and purified sodium sulfate anhydrous from the sodium dichromate production process. The Texas facility sells hydroxide solution from their sodium dichromate production process. We found no information indicating that the facilities which purchase these materials burn them for energy recovery or incorporate them into products that are used on the land (use constituting disposal). Since these processes are outside the scope of the consent decree we did not evaluate any of these materials further. We did however, evaluate some residuals produced on-site at the North Carolina and Texas facilities during the preparation of the materials that are sold. See the discussions in the sections below of salt cake drier scrubber water and caustic filter sludge. Finally, the North Carolina facility produces some off-specification product, which it reinserts into the sodium dichromate manufacturing process. Off-specification product, when reinserted without reclamation into the process from where it originated, is not a solid waste. See the ''Sodium Dichromate Listing Background Document for the Inorganic Chemical Listing Determination'' for more details on these residuals.

e. Waste characterization and Agency evaluation. Chromium is the primary constituent of concern in the wastes from both facilities. Chromium occurs in several production wastes at high levels, in some cases exceeding the TC level (5.0 mg/L) in TCLP leachate samples. These wastes are coded as hazardous (D007). Both facilities treat some of their D007 wastes on-site and send other D007 wastes off-site for treatment and disposal at permitted Subtitle C hazardous waste facilities. Various other wastes which fall below D007 regulatory levels are either treated on-site or sent off-site for disposal. No other constituents of concern were reported to be present in the wastes at levels of concern.

We propose not to list any of the wastes from the sodium dichromate manufacturing industry. Many wastes from this industry are Bevill exempt once treated, and therefore not within the scope of the consent decree requirements. Other wastes are characteristically hazardous and are managed at permitted Subtitle C facilities off-site. Some wastes did not exhibit constituents at levels of concern for purposes of a listing given the nature of their management and disposal. The main constituent of concern, chromium, is treated on-site for many of the wastes.

Several wastes from each of the facilities are disposed of in a treated form, rather than an as-generated form. In general, we focused our evaluation on the treated form of wastes because it is ultimately only the treated wastes which are disposed.

The sections below describe how wastes are generated and managed at the two sodium dichromate manufacturing facilities, each with its own production process, and our rationale for proposing not to list the wastes. We solicit comments on the proposed listing decisions described below.

(1) North Carolina Facility.

(a) Residuals Commingled in Spent Ore Residue Treatment Unit. The North Carolina facility commingles and treats several characteristic wastes from sodium dichromate manufacturing in an on-site, tank-based treatment unit at the North Carolina facility. These four sodium dichromate manufacturing wastes are:

—Waste heat boiler washout, which are accumulated solids from the internal

components of the roasting kiln waste heat boilers (Bevill exempt after treatment)
—Spent post-leach ore residue (Bevill exempt after treatment)
—Spent post-neutralization ore residue (Bevill exempt after treatment)
—Saltcake drier scrubber wastewater

We consider the saltcake drier scrubber wastewater to be a wastestream associated with the production of sodium sulfate at the North Carolina facility, rather than a sodium dichromate manufacturing waste. Nevertheless, we chose to exercise our discretion to evaluate the risk posed by the treated and untreated form of this residue. As explained below, we did not find risks warranting listing.

All four wastes catalogued above go directly from their points of generation to the on-site spent ore residue treatment unit without intervening storage. The facility treats non-contact cooling tower blowdown, remediation well water, and stormwater in the treatment unit as well. The four manufacturing wastes comprise approximately 60–65% by volume of the wastes entering the treatment unit. The entire treatment process takes place in a series of tanks with secondary containment. Treatment consists of conversion of hexavalent chromium in the wastes to trivalent chromium with pickle liquor (ferrous chloride reducing agent). Trivalent chromium is a generally less toxic and less soluble form of chromium. Wastes containing a high percentage of solids (waste heat boiler washout, spent post-leach ore residue, and spent post-neutralization ore residue) are also neutralized with lime slurry in order to increase precipitation of trivalent chromium compounds out of solution.

The treatment sludge is then thickened in a series of clarifier tanks. Limestone is added to the thickened sludge to further stabilize chromium and other metals. All of the tanks in the treatment train have secondary containment and some are covered. Treated wastewaters, after passing through sand filters, discharge from the treatment unit under an NPDES permit or travel with the treated solid residues to the on-site industrial Subtitle D disposal unit (see section III.F.12.e(1)(b)ii below regarding the commingled treated wastewaters).

The Bevill exemption applies to the waste heat boiler washout, spent post-leach ore residue, and spent post-neutralization ore residue only after the wastes are treated. We evaluated the potential for releases from the treatment tanks. We assumed that the tanks were intact structures with minimal potential for releases to groundwater. We do not anticipate significant air releases because the wastes do not contain volatile constituents and have high moisture content. Also, some of the tanks have covers which further reduce the possibility of air releases. We are proposing not to list any of these four wastestreams undergoing treatment in this tank system.

(b) Residuals Disposed of On-Site. (i) Commingled reduced chromium treatment residues. The reduced chromium sludge from the on-site spent ore residue treatment unit is slurried and conveyed directly from the treatment unit to one of two on-site industrial Subtitle D disposal units (former limestone quarries). Of the several treatment residues contributing to the final commingled treatment residue, only one falls within the scope of today's listing proposal; residue from treatment of saltcake drier scrubber wastewater (we believe this is not within scope of the consent decree but are evaluating it in this rule making). Residues from the treatment of waste heat boiler washout, spent post-leach ore residue, and spent post-neutralization ore residue are Bevill exempt mineral processing wastes beyond the scope of today's listing proposal (see Section III.F.12(c)). Stormwater and remediation well water are contaminated media whose treatment residues we also consider to be beyond the scope of the consent decree (see section III.B of today's proposal). Therefore, we do not consider the risks posed by these treatment residues.

According to information the facility submitted in their RCRA Section 3007 Survey response, the only potential constituent of concern in the untreated saltcake drier scrubber wastewater is chromium, detected at a level of 6 mg/L. Therefore, chromium is the only constituent we considered when assessing the level of risk from saltcake drier scrubber wastewater treatment residues.

Of the total mass of chromium found in the commingled reduced chromium treatment residues, the saltcake drier scrubber wastewater contributes approximately 0.001%. This estimate is based on calculations using information the North Carolina facility provided to us on chromium contents and tonnages of waste exiting the spent ore residue treatment unit. Both the information and the calculations are further detailed in the ''Sodium Dichromate Listing Background Document for the Inorganic Chemical Listing Determination.''

We found the treatment residues from saltcake drier scrubber solution to pose no significant risks to groundwater. After treatment for hexavalent chromium, the commingled reduced chromium treatment residues from 1998 showed weekly TCLP analysis levels of leachable chromium in the range of 0.01–1.00 mg/L for composite samples and <0.01–0.76 mg/L for grab samples. Assuming that the saltcake drier scrubber wastewater's percent contribution to total chromium in the commingled residues is equal to its percent contribution to total chromium leaching from the commingled residues (0.001%), the saltcake scrubber solution was responsible for TCLP leaching levels of 1×10^{-7} to 1×10^{-5} mg/L for composite samples and $<3\times10^{-7}$ to 2.28×10^{-5} mg/L for grab samples. The HBL for ingestion of hexavalent chromium is 0.047 mg/L and 23 mg/L for trivalent chromium. The AWQC for hexavalent chromium is 0.011 mg/L and 0.74 mg/L for trivalent chromium. Even at a maximum leaching level of 1×10^{-5} mg/L, the leachable chromium contribution of the saltcake drier scrubber wastewater indicates a very low level of risk to groundwater.

The treated wastes are disposed in an uncovered disposal unit that resembles a surface impoundment. However, given the inorganic, nonvolatile nature of the treated wastes, we do not believe they pose a risk through airborne pathways. Given the low level of chromium leaching attributable to the one treatment residue within the scope of today's listing proposal and the lack of volatile constituents of concern, we propose not to list residues deriving from the treatment of saltcake drier scrubber wastewater.

(ii) Commingled treated wastewaters. The spent ore residue treatment unit described in the sections above has clarifier units which discharge a wastewater stream to tank-based sand filters. After passing through sand filters, the treated wastewaters discharge through an NPDES-permitted outfall. These wastewaters are a mixture of non-Bevill exempt and Bevill exempt treatment residues, and other treatment residues beyond the scope of the consent decree. The solids suspended in the wastewaters are a mixture of Bevill exempt and non-Bevill exempt treatment residues. The liquid portion, the majority of this wastestream, is a mixture of non-Bevill exempt residues, some of which are within the scope of this listing determination, and some of which derive from treatment of contaminated media and are therefore not with the scope of this listing determination. We did not find any

significant potential for releases from the tanks. (We assess spent filter media from the sand filters separately in section III.F.12.e(1)(c)ii below.) We concluded that the NPDES discharge is exempt from RCRA regulation.

A portion of the commingled treated wastewaters remains with the commingled reduced chromium treatment residues discharged for disposal to the facility's on-site industrial Subtitle D disposal units. The facility also adds water to this mixture from either the nearby Northeast Cape Fear River or the quarry in order to help slurry and convey the residues to the disposal units.

The liquids which separate from the settled treatment residues in the facility's disposal units are not Bevill exempt wastes (see Section III.F.12.c). Because these liquids derive from the same treatment unit from which the NPDES-discharged wastewaters discussed above derive, we are assuming their chemical composition is very similar to that of the wastewaters discharged under the facility's NPDES permit. We used NPDES permit discharge data, available to the public from the EPA's Envirofacts database, [42] as a surrogate for characterization of this wastewater (see discussion of SPLP filtrate in Section III.E.3). The exposure pathway of concern is the groundwater underlying the facility's disposal units and consumption of the groundwater as drinking water.

According to the North Carolina facility's NPDES permit, the facility is allowed to discharge 0.31 pounds per day of hexavalent chromium to the Northeast Cape Fear River. Given the amount of treated wastewater reported to be discharged in 1998 and using the permit loading as an upperbound value, we estimate that the facility produced an NPDES effluent with an average hexavalent chromium concentration of 0.056 mg/L. This concentration is less than twice the HBL for hexavalent chromium (0.047 mg/L).[43] However, according to NPDES compliance monitoring data for the facility, no hexavalent chromium was detected in the facility's NPDES effluent in 1998. Therefore, it is likely that the actual concentration of hexavalent chromium in the facility's commingled treated wastewaters is less than the concentration the facility is permitted to release.

According to the North Carolina facility's NPDES permit, the facility is also permitted to discharge 2.72 pounds of combined hexavalent and trivalent chromium per day. Making the conservative assumption that all 2.72 pounds of chromium are trivalent chromium and given the amount of treated wastewater discharged in 1998, we estimated that the facility produced an NPDES effluent with an average chromium concentration of 0.49 mg/L, which is less than 23 mg/L, the HBL for trivalent chromium. Actual reported levels of total chromium release were well below the permit limit.

Given that the levels of chromium present in the on-site disposal unit liquids are less than or within a factor of two of the HBLs, we do not believe they pose a risk to human health or the environment through groundwater underlying the disposal unit that supports listing these wastewaters as a hazardous waste.

(c) Residuals Disposed of Off-Site. (i) Chromium-contaminated filters, membranes, and other plant wastes. This waste category from the North Carolina facility includes spent filters, membranes, and various other plant wastes which exceed the TC level for chromium. The wastes are stored in a closed roll-off bin on-site before being sent off-site to a permitted Subtitle C facility for treatment and disposal in a landfill. We feel that applicable Subtitle C regulations adequately prevent mismanagement and therefore propose not to list these wastes.

(ii) Spent sand filter sands. The North Carolina facility generates waste sand material from the spent ore residue treatment unit sand filters which filter treated wastewaters prior to their NPDES-permitted discharge. The purpose of the sand filters is to remove any residual solids which the treatment unit clarifiers fail to remove upstream in the treatment process. Since the clarifiers capture the majority of the solids, the sand filters capture smaller amounts of treatment residue. The most recent disposal of sand from the filters took place in 1997. The facility stores the spent sand in closed drums or roll-off bins on-site before disposing of them in an off-site industrial Subtitle D solid waste landfill.

According to information submitted to EPA by the North Carolina facility, this residue does not exhibit any constituent above the TC level according to TCLP leachate analysis. The only detected constituent of potential concern was chromium, at a level of 0.2 mg/L. Residue from treatment of saltcake drier scrubber wastewater is the only residue contributing to the chromium levels in the spent sand filters which also falls within the scope of today's listing proposal. All other wastes are either Bevill exempt wastes or treatment residues from contaminated media or non-contact cooling water, none of which falls within the scope of the consent decree.

As discussed in section III.F.12.e(1)(b), the saltcake drier scrubber solution contributes approximately 0.001% of the total chromium exiting the spent ore residue treatment unit. Assuming that a waste's percent contribution to total chromium exiting the treatment unit is equal to its percent contribution to total chromium leaching from waste exiting the unit, the figures above indicate a TCLP leaching level of 2×10^{-6} mg/L due to the contributions of the saltcake drier scrubber wastewater.

The HBL for hexavalent chromium is 0.047 mg/L and 23 mg/L for trivalent chromium. The AWQC for hexavalent chromium is 0.011 mg/L and 0.74 mg/L for trivalent chromium. At a level of 2×10^{-6} mg/L, the leachable chromium contribution of the saltcake drier scrubber wastewater presents a very low level of risk.

The waste is inorganic in nature and therefore we do not expect it to contain volatile constituents of concern. In addition, the waste is stored before disposal in a closed container. We do not believe, therefore, that this waste poses a risk via airborne pathways. Given the low level of risk posed by the saltcake drier scrubber wastewater treatment residue contribution to leachable chromium levels in the spent sand filters and its nonvolatile nature, we propose not to list this waste.

(2) Texas Facility. (a) Residuals Commingled in On-Site Treatment Units. At the Texas facility, commingling and treatment of four untreated wastes takes place in two different on-site, tank-based treatment units. The treatment residues from the two treatment units are then co-disposed in an on-site, Subtitle D treatment surface impoundment. The first treatment unit, the spent ore residue treatment unit, treats the following two sodium dichromate manufacturing wastestreams:

—spent post-neutralization ore residue (Bevill exempt after treatment)

—caustic filter sludge from filtration of sodium hydroxide

We consider caustic filter sludge to be a wastestream associated with the production of sodium hydroxide rather than a sodium dichromate manufacturing waste. Nevertheless, we chose to exercise our discretion to

[42] http://www.epa.gov/enviro/index_java.html.

[43] As described in Section III.E.3, we used engineering judgment to screen out constituents with concentrations within a factor of two of the HBL.

evaluate the risk posed by the treated and untreated forms of this residue.

The spent ore residue treatment unit treatment tanks have both secondary containment and covers. Treatment consists of converting the hexavalent chromium in the units to trivalent chromium. Trivalent chromium is typically a less soluble and less toxic form of chromium. Ore residue wastes are not Bevill exempt and therefore beyond the scope of the consent decree until treatment occurs. Therefore, we have evaluated the potential for releases from these treatment tanks. We assume the tanks are intact structures with minimal potential for releases to groundwater. We believe the covers on the tanks reduce the potential for air releases. Also, the wastes do not contain volatile constituents.

The second treatment unit, the wastewater treatment unit, treats the following two sodium dichromate manufacturing wastestreams:

—sodium chromate evaporation unit wastewaters

—sodium dichromate evaporation unit wastewaters

The wastewater treatment unit also treats remediation well water and stormwater, two types of contaminated media which are outside the scope of the consent decree. The two wastewaters within the scope of the consent decree make up approximately 9% of the total volume of the wastes entering the treatment unit. The facility converts hexavalent chromium to less toxic trivalent chromium during this treatment process. The tanks do not have covers.

We evaluated the tanks for potential releases to the environment. We assumed the tank structures were intact and therefore posed minimal potential for releases to groundwater. Since the wastewaters contain no volatile constituents, we found no significant potential for air releases. We are proposing not to list the wastes in these treatment tanks.

The facility disposes the treatment materials from the two tank systems described above in an on-site surface impoundment. We describe that surface impoundment in the next section.

(b) Residuals Disposed of On-Site. (i) Commingled reduced chromium treatment residues. The treatment residues from the two treatment tank systems described in the section above are piped directly to the facility's on-site, double-lined, Subtitle D surface impoundment for co-disposal and dewatering. Of the several treatment residues contributing to the mass of reduced chromium treatment residue disposed of in the Subtitle D surface impoundment at the Texas facility, only three fall within the scope of today's listing proposal: residue from treatment of caustic filter sludge, residue from treatment of sodium chromate evaporation unit wastewaters, and residue from treatment of sodium dichromate evaporation unit wastewaters. Residues from the treatment of post-neutralization spent ore residue are Bevill exempt mineral processing wastes beyond the scope of today's listing proposal (see section III.F.12.c). Stormwater and remediation well water are contaminated media whose treatment residues we also consider to be beyond the scope of the consent decree (see section III.B). Therefore, we do not consider the risks posed by these residues.

According to information the facility submitted in their RCRA Section 3007 Survey response, the only potential constituent of concern in the untreated sodium dichromate evaporation unit wastewater, sodium dichromate evaporation unit wastewaters, and the caustic filter sludge is chromium, measured at a level of 0.5 mg/L, 0.5 mg/L and 20 mg/kg, respectively. Therefore, chromium is the only constituent we considered when assessing the level of risk from sodium dichromate evaporation unit wastewater, sodium chromate evaporation unit wastewater, and caustic filter sludge treatment residues.

Of the total chromium contributed to the co-disposed reduced chromium treatment residue by all incoming wastes, the sodium dichromate evaporation unit wastewater, sodium chromate evaporation unit wastewater, and the caustic filter sludge contribute 5×10^{-5} percent by weight. This estimate is based on calculations using information the Texas facility provided to us on chromium contents and tonnages of wastes entering the spent ore residue treatment unit and the wastewater treatment unit on-site. Both the information and the calculations are described further in the ''Sodium Dichromate Listing Background Document for the Inorganic Chemical Listing Determination.''

The facility did not provide us with TCLP, SPLP, or total constituent analyses for the co-disposed reduced chromium treatment residues. However, the facility did report to us that reduced chromium treatment residues do not exceed the TC level of 5.0 mg/L according to TCLP analysis. In addition, the facility reported that for the time period between October 1, 1998 and December 31, 1998, weekly samples of reduced chromium treatment residues from the spent ore residue treatment unit analyzed with a facility-modified version of the TCLP ranged between 0.16 and 1.75 mg/L chromium (see ''Sodium Dichromate Listing Background Document for the Inorganic Chemical Listing Determination'' for details). Therefore, conservatively assuming a maximum TCLP chromium leaching level of 4.9 mg/L and assuming that the percent contribution by the three wastes to total chromium entering the treatment units is equal to their percent contribution to total chromium leaching from treatment residues exiting the treatment units, the caustic filter sludge, sodium chromate evaporation unit wastewaters, and sodium dichromate evaporation unit wastewaters were responsible for TCLP chromium leaching levels of 2.45×10^{-6} mg/L.

The HBL for hexavalent chromium is 0.047 mg/L and 23 mg/L for trivalent chromium. The AWQC for hexavalent chromium is 0.011 mg/L and 0.74 mg/L for trivalent chromium. At a leaching level of 2.45×10^{-6} mg/L, the leachable chromium contribution of the caustic filter sludge, sodium chromate evaporation unit wastewaters, and the sodium dichromate evaporation unit wastewaters indicates a very low level of risk to groundwater from potential releases from the surface impoundment.

The waste is metallic and inorganic in nature and therefore we do not expect it to contain volatile constituents of concern. We do not believe, therefore, that this waste poses a risk via airborne pathways. Given the low level of chromium leachate deriving from the three treatment residues within the scope of today's listing proposal and placed into the surface impoundments, we propose not to list residues deriving from the treatment of caustic filter sludge, sodium chromate evaporation unit wastewater, and sodium dichromate evaporation unit wastewater.

(ii) Commingled treated wastewaters. Treated wastewaters commingled with the commingled reduced chromium treatment residues separate from these solid residues in the Texas facility's surface impoundment disposal unit. These liquids are not Bevill exempt wastes (see Section III.F.12.3). The solids suspended in the wastewaters are a mixture of Bevill exempt and non-Bevill exempt treatment residues. The liquid portion, the majority of this wastestream, is a mixture of non-Bevill exempt residues, some of which are within the scope of this listing determination, and some of which derive from treatment of contaminated

media and are therefore not within the scope of this listing determination.

The commingled treated wastewaters discharge from the surface impoundment through an NPDES-permitted outfall after passing through sand filters to remove residual solids (see discussion below in Section III.F.12.e(2)(c)(ii). We therefore assume that the chemical composition of the treated wastewaters in the surface impoundment is very similar to that of the NPDES permitted discharge. We used NPDES permit discharge data, available to the public from the EPA's Envirofacts database,[44] as a surrogate for characterization of this wastewater (see discussion of SPLP filtrate in Section III.E.3). The exposure pathway of concern is the groundwater underlying the facility's disposal units and consumption of the groundwater as drinking water.

According to the Texas facility's 1998 NPDES monitoring data, the facility discharged an average of 0.018 pounds of hexavalent chromium each day through their internal NPDES outfall. Given the amount of treated wastewater the facility reported as discharge from the surface impoundment in 1998, we estimate that the facility produced an NPDES effluent with an average hexavalent chromium concentration of 0.016 mg/L. This concentration is less than the HBL for hexavalent chromium (0.047 mg/L).

According to the Texas facility's NPDES monitoring data for 1998, the facility released an average of 0.46 pounds of combined hexavalent and trivalent chromium per day. Making the conservative assumption that all 0.46 pounds of chromium are trivalent chromium and given the amount of treated wastewater discharged in 1998, we estimated that the facility produced an NPDES effluent with an average chromium concentration of 0.41 mg/L, which is less than 23 mg/L, the HBL for trivalent chromium.

Wastes in the surface impoundment dewater and the resulting wastewaters pass out of the surface impoundment and through tank-based sand filters. From the sand filters, the treated wastewaters then discharge through an NPDES-permitted outfall. These wastewaters are a mixture of non-Bevill exempt and Bevill exempt treatment residues, and other treatment residues beyond the scope of the consent decree. We did not find any significant potential for releases from the sand filter tanks. (We assess spent filter media from the sand filters separately in Section III.F.12.e(2)(c)(ii) We concluded that the NPDES discharge is exempt from RCRA regulation.

(c) Residuals Disposed of Off-Site. (i) Process filters and membranes, baghouse bags, chromium-contaminated empty containers, and other plant wastes. The Texas facility reports in their RCRA Section 3007 Survey response that process filters and membranes and baghouse bags from their facility exceed the TC level for chromium and are coded D007. The facility also reports that they produce empty containers and other plant wastes contaminated with chromium which are also coded D007. The facility stores these hazardous wastes in a closed rolloff bin on-site before sending them off-site to a permitted Subtitle C hazardous waste facility for treatment and landfill disposal. These wastes are sufficiently managed under current RCRA Subtitle C regulations and therefore we propose not to list these wastes.

(ii) Spent sand filter sands. The Texas facility generates waste sand material from the sand filters which filter treated wastewaters prior to their NPDES permitted discharge from the facility's on-site surface impoundment. The purpose of the sand filters is to remove any residual solids which fail to settle in the surface impoundment. Since the majority of the solids settle in the surface impoundment, the sand filters captures smaller amounts of reduced chromium treatment residue. Approximately 2 MT of spent sand filter sand is disposed of every two years. The facility stores the spent sand in non-hazardous soil bins on-site before disposing of it at an off-site Subtitle D industrial landfill.

According to the Texas facility, this residue does not exhibit any constituent above the TC level according to TCLP leachate analysis. Residues from treatment of caustic filter sludge, sodium chromate evaporation unit wastewaters, and sodium dichromate evaporation unit wastewaters are the only residues contributing to the potential constituent of concern levels in the spent sand filters which also fall within the scope of today's listing proposal. All other wastes are either Bevill exempt wastes or treatment residues from contaminated media, neither of which falls within the scope of the consent decree.

Chromium was the only potential constituent of concern detected in the sodium chromate evaporation unit wastewaters, sodium dichromate evaporation unit wastewaters and the caustic filter sludge, and is therefore the only potential constituent of concern we considered in the spent sand filter sands. As discussed in the section on commingled reduced chromium treatment residues, the residues contribute 5×10^{-5} percent of the total chromium mass entering the spent ore residue treatment unit. Assuming a maximum TCLP chromium leaching level of 4.9 mg/L, and assuming that the percent contribution to total chromium by the three wastes entering the treatment units is equal to their percent contribution to total chromium leaching from treatment residues exiting the treatment units, the caustic filter sludge, sodium chromate evaporation wastewaters, and sodium dichromate evaporation unit wastewaters were responsible for TCLP chromium leaching levels of 2.4×10^{-6} mg/L.

The HBL for hexavalent chromium is 0.047 mg/L and 23 mg/L for trivalent chromium. The AWQC for hexavalent chromium is 0.011 mg/L and 0.74 mg/L for trivalent chromium. At a level of 2.4×10^{-6} mg/L, the leachable chromium contribution of the sodium dichromate evaporation unit wastewater, the sodium chromate evaporation wastewaters, and the caustic filter sludge presents a very low level of risk.

The waste is metallic and inorganic in nature, and therefore we do not expect it to contain volatile constituents of concern. We do not believe, therefore, that this waste poses a risk via airborne pathways. Given the low level of risk posed by the contribution of constituents in the spent filter sands attributable to caustic filter sludge, sodium chromate evaporation unit wastewaters, and sodium dichromate evaporation unit wastewater treatment residue, the absence of volatile constituents of concern, and the relatively small volume of the total waste, we propose not to list this waste.

13. Sodium Phosphate From Wet Process Phosphoric Acid

a. Summary. We propose not to list any wastes from the production of sodium phosphate from wet process phosphoric acid as hazardous under subtitle C of RCRA. Many of these secondary materials are piped back into the production process; other wastes are discharged to a permitted publicly-owned treatment works (POTW). Other materials are sent to Subtitle D industrial landfills. After an analysis of waste management practices and potential exposure pathways, we conclude that there are no risk pathways of concern. These wastes do not meet the criteria set out at 40 CFR 261.11(a)(3) for listing as hazardous.

b. Description of the sodium phosphate industry. Sodium phosphate is the more general chemical name for

[44] http://www.epa.gov/enviro/index_java.html

a wide variety of salts produced from the neutralization of phosphoric acid. Some of the salts produced by the facilities in this industry are monosodium dihydrogen phosphate (H_2NaPO_4), disodium monohydrogen phosphate (HNa_2PO_4), trisodium phosphate (Na_3PO_4), sodium hexametaphosphate ($Na_4P_4O_{12}$), and sodium tripolyphosphate ($Na_5P_3O_{10}$).

The various phosphate salts produced are used for a wide variety of purposes, ranging from a water soluble solid acid and pH buffer for acidic cleaners to products manufactured for the food industry [45]. Sodium phosphate is produced from wet process phosphoric acid by two manufacturing companies at four locations in the United States. For more detailed information concerning this industry, see ''Sodium Phosphate Listing Background Document for the Inorganic Chemical Listing Determination'' in the docket for today's proposal.

The processes for monosodium dihydrogen phosphate, disodium monohydrogen phosphate, and trisodium phosphate are similar except for the ratio of phosphoric acid to soda ash at the reactor stage and the type, size and construction of the crystallizing and drying equipment. The raw materials are water, phosphoric acid, soda ash, and caustic. The purified phosphoric acid is manufactured elsewhere through the wet-acid purification method and is food grade. The process starts with a reaction between phosphoric acid, soda ash, and caustic. The solution is used to make the monosodium dihydrogen phosphate, which passes through a polishing filter before shipment to customers. The sodium to phosphorus ratio of the solution is adjusted with caustic to make disodium monohydrogen phosphate and trisodium phosphate. These solutions are filtered and then crystallized. The crystals from each process pass through dryers. The finished product is packaged or shipped in bulk.

Sodium hexametaphosphate and sodium tripolyphosphate are also produced from food-grade phosphoric acid and soda ash. Both processes start with a reaction between phosphoric acid and soda ash. For the sodium hexametaphosphate process, the product is fed to a furnace which melts the mix and converts it to sodium hexametaphosphate. For the sodium tripolyphosphate process, the reaction discharge is dried and heat treated in a converter to convert it to sodium tripolyphosphate. In both processes, the product is cooled, sized, stored, and packaged for shipment.

c. What kinds of wastes are generated by these processes? A brief description of the waste categories, how they are generated, their volumes across the industry, and how they are managed is presented in Table III–34:

TABLE III–34.—SODIUM PHOSPHATE PRODUCTION WASTES

Waste category	1998 Volume (MT)	Source	Management practices
Filter press cakes	120	Product polishing	Recycled or Subtitle D landfill.
Mix area filters	0.009	Product polishing	Subtitle D landfill.
Dust collector filter bags	2.1	Drying and grinding processes	Subtitle D landfill.
Scrubber waters and effluents	32	Process vapor scrubbers	POTW or recycled.
Product dust collected	Not reported	Drying and grinding processes	Recycled or Subtitle D landfill.
Off-specification product	771	Off-specification grinding or customer returns.	Recycled or Subtitle D landfill.

For those scenarios where secondary materials (filter press cakes, product dust, off-specification product, and scrubber water) are piped back to the production process, we could identify no potential route for significant exposure prior to reuse. In addition, we evaluated all wastes generated after reinsertion of these materials into the process and we do not believe that these secondary materials present significant threats. Also, off-specification product, when reinserted without reclamation into the process from where it originated, is not a solid waste. For those scenarios where wastes are discharged via the facility's common sewage line to permitted publicly-owned treatment works (POTWs), these wastes are excluded from RCRA (40 CFR 261.4(a)(1)(ii)). For those scenarios where wastes are sent to industrial subtitle D landfills, we performed a risk assessment to help us determine whether these risks warranted listing.

d. Agency evaluation. (1) Filter press cake and mix area filters.

How Was This Waste Characterized?

We collected two samples of this residual at one facility. Based on our assessment of the raw materials and production processes used across the industry, we believe these samples are representative of the range of waste characteristics at the other three sodium phosphate production facilities. Constituents detected above their HBLs are summarized in Table III–35.

TABLE III–35.—CHARACTERIZATION OF FILTER PRESS CAKES FROM SODIUM PHOSPHATE PRODUCTION

Parameter	Total (mg/kg)	TCLP (mg/l)	SPLP (mg/l)	HBL (mg/l)
Primary filter press cake (Sample RCH–1–SP–01):				
Antimony	0.5	<0.5	0.0298	0.006
Thallium	<2	<2	0.0055	0.001

[45] In this preamble, we often refer to sodium phosphate produced for the food industry as ''food grade.'' The Food and Drug Administration (FDA), Department of Health and Human Services, refers to the various sodium phosphates used in the food industry as ''substances generally recognized as safe'' (GRAS). The FDA states that: ''This substance is generally recognized as safe when used as in accordance with good manufacturing practice.'' (See, for example, 21 CFR 182.1778, 182.6290, 182.6778, and 182.8778.) In deciding whether a food additive should be approved, the FDA considers the composition and properties of the substance, the amount likely to be consumed, its probable long-term effects and various safety factors.

TABLE III–35.—CHARACTERIZATION OF FILTER PRESS CAKES FROM SODIUM PHOSPHATE PRODUCTION—Continued

Parameter	Total (mg/kg)	TCLP (mg/l)	SPLP (mg/l)	HBL (mg/l)
Tray filter cake (Sample RCH–1–SP–02):				
Antimony	<0.5	<0.5	<0.025	0.006
Thallium	<2	<2	0.0079	0.001

What Management Scenarios Were Assessed and How Was the Risk Assessment Established?

These wastes go to industrial subtitle D landfills and we therefore determined that we would model the scenario of off-site disposal in an industrial D landfill. We assessed the off-site landfill scenario using the hydrogeologic properties associated with the geographic areas where the landfills reported in the survey are located.

We gave the SPLP results primary consideration as there is no reported management in municipal landfills (where the TCLP results would be relevant). Based on the sampling results summarized above, we decided that modeling was necessary for two constituents of concern: antimony and thallium. For antimony, we used one-half of the detection limit as a model input for sample RCH–1–SP–02. We used the probabilistic approach for an off-site industrial Subtitle D landfill described in section III.E of today's proposal.

What Is EPA's Listing Rationale for This Waste?

From the results of the risk assessment, summarized below in Table III–36, neither antimony nor thallium (the constituents of concern) pose a substantial present or potential hazard to human health and the environment. The hazard quotients for both constituents, for both the adult and child exposure scenarios, are less than 0.008 at the 95th percentile. As a matter of policy, EPA generally does not consider listing wastes with predicted hazard quotients of less than 1.0. We see no special concerns warranting an exception to this policy. Therefore, we believe that these wastes do not warrant listing.

For the mix area filters, the location of these filters indicates that any contaminants found would be similar to those of the filter press cake. Given that our evaluation of the much larger volume filter press cake yielded no significant risk, we are also proposing not to list the very small volume mix area filters.

For a more complete description of these analyses, see ''Risk Assessment for the Listing Determinations for Inorganic Chemical Manufacturing Wastes'' in the docket for this proposed rulemaking.

TABLE III–36.—PROBABILISTIC RISK RESULTS FOR FILTER PRESS CAKES

Percentile	Antimony		Thallium	
	Adult HQ	Child HQ	Adult HQ	Child HQ
Industrial landfill:				
90th	0.001	0.003	0.002	0.003
95th	0.004	0.008	0.004	0.008

(2) Dust collector filter bags.

How Was This Waste Characterized?

We collected one sample of this residual. Based on our assessment of the raw materials and production processes used across the industry, we believe this sample is representative of similar wastes at the other three sodium phosphate production facilities. The waste constituents detected at levels above their HBLs are summarized in Table III–37:

TABLE III–37.—CHARACTERIZATION OF DUST COLLECTOR FILTER BAG FROM SODIUM PHOSPHATE PRODUCTION

[Sample RCH–1–SP–03]

Parameter	Total (mg/kg)	TCLP (mg/l)	SPLP (mg/l)	HBL (mg/l)
Antimony	48.8	<0.5	0.309	0.006
Arsenic	<0.5	<0.5	0.0064	0.0007

What Management Scenarios Were Assessed and How Was the Risk Assessment Established?

Industry reported that this waste is managed in off-site industrial D landfills. We assessed this scenario. Antimony and arsenic are the constituents of concern.

Because the volume of this waste is relatively small, we first used the de minimis waste quantity screening analysis (described in section III.E.3) to screen the potential risk to groundwater associated with landfilling this waste. We found that the SPLP data for arsenic screens out because the waste volume is insufficient to release arsenic at levels of concern. For a more complete description of this analysis, see ''Risk Assessment for the Listing Determinations for Inorganic Chemical Manufacturing Wastes'' in the docket for this proposed rulemaking.

The detected SPLP levels for antimony did not screen out using the *de minimis* volume analysis. We conducted full groundwater modeling for the industrial landfill scenario for this constituent. We assessed the off-site landfill scenario using the probabilistic approach for off-site landfills described in section III.E.

What Is EPA's Listing Rationale for This Waste?

From the results of the risk assessment, summarized below in Table III–38, antimony (the constituent of concern) does not pose a substantial present or potential hazard to human health and the environment. The hazard quotients for antimony, for both the adult and child exposure scenarios, are less than 0.007 at the 95th percentile. As a matter of policy, EPA generally does not consider listing wastes with predicted hazard quotients of less than 1.0. We see no special concerns warranting an exception to this policy. Therefore, we believe that this waste does not warrant listing. For a more complete description of this analysis, see ''Risk Assessment for the Listing Determinations for Inorganic Chemical Manufacturing Wastes'' in the docket for this proposed rulemaking.

TABLE III–38.—PROBABILISTIC RISK RESULTS FOR DUST COLLECTOR BAGS

Percentile	Antimony	
	Adult HQ	Child HQ
Industrial landfill:		
90th	0.001	0.002
95th	0.003	0.003

(3) Scrubber waters and effluents. We did not evaluate scenarios where these secondary materials are piped back into the production process because there is no potential for exposure. For those scenarios where wastes are managed in a tank, the impervious nature of the construction materials (concrete,

fiberglass, or steel) of tanks are unlikely to result in releases to groundwater in all but the most catastrophic scenarios. We also are not concerned with potential air releases from these tanks as neither volatile contaminants nor airborne particulates are likely to be present in these aqueous wastes. For those scenarios where wastes are discharged via the facility's common sewage line to POTWs, these wastes are excluded from RCRA (40 CFR 261.4(a)(1)(ii)). Furthermore, these discharges are regulated by the Clean Water Act pretreatment standards. They do not warrant listing. We propose not to list this waste.

(4) Product dust collected. All collected dust that can be recycled is recycled back into the production process. Due to production constraints, some portion of this collected product dust cannot be recycled back to the process and is instead sent to an industrial Subtitle D landfill. However, this landfilled product is still food-grade product. Because this ''waste'' is, in fact, food-grade product, we believe it unlikely that it contains any constituent exceeding health-based limits based on ingestion. Therefore, we propose not to list this waste.

(5) Off-specification product. Much of this material is reused in the production process with no potential for exposure. However, because of production constraints, they cannot always work all of this material back into the process, and it must be disposed in an industrial subtitle D landfill. In all cases, product is rejected by a customer because of physical property problems—i.e., particle size—rather than chemical problems or contaminants. Because this ''waste'' is, in fact, food-grade product, we believe it unlikely that it contains any constituent exceeding health-based limits based on ingestion. Therefore, we propose not to list this waste.

14. Titanium Dioxide

a. Summary. We evaluated wastes from the production of titanium dioxide and propose to list one waste and not to list all of the others. Certain wastes from titanium dioxide production are exempt mineral processing wastes and were not assessed as part of today's listing determination because they are outside the scope of the consent decree. We are proposing to list nonwastewaters from the chloride ilmenite process (unless otherwise exempted).

K178 Nonwastewaters from the production of titanium dioxide by the chloride-ilmenite process. (T) [This listing does not apply to chloride process waste solids from titanium tetrachloride production exempt under section 261.4(b)(7)]

We propose not to list the remainder of the wastes generated by this sector. We do not believe these wastes pose threats to human health or the environment that warrant listing. We have not identified risks of concern associated with the current management of these wastes that support a listing determination. Our findings, however, do not change the applicability of existing standards and regulations, such as the hazardous waste characteristics, to these wastes and this industry.

b. Description of the titanium dioxide industry. There are nine facilities producing titanium dioxide. There are three distinct processes currently in use: the chloride process, the sulfate process, and the chloride-ilmenite process. Six facilities use the chloride process. Two of these six facilities also produce titanium dioxide via the sulfate process. Three separate facilities use only the chloride-ilmenite process.

Chloride Process. In the chloride process, rutile or high-grade ilmenite is converted to titanium tetrachloride ($TiCl_4$). The conversion takes place in a chlorinator in the presence of chlorine gas with petroleum coke added as a reductant. All U.S. producers of $TiCl_4$ use fluidized bed chlorinators. Vent gases from the chlorinator are scrubbed prior to venting to the atmosphere. Non-volatile metal chlorides and unreacted coke and ore solids are removed from the gaseous product stream. The facilities also generate waste acid, which they mingle with coke and ore solids before treatment. Vent gases from the chlorinator are scrubbed prior to venting to the atmosphere. The volatile $TiCl_4$ and other volatile metal compounds such as vanadium oxychloride, exit the chlorinator as overhead vapor. The gaseous product stream is purified to separate the titanium tetrachloride from other metal chloride impurities using processes such as partial condensation and chemical treatment. Finally, vanadium compounds, which have boiling points close to that of $TiCl_4$, are removed from the titanium tetrachloride by complexing with mineral oil and reducing with hydrogen sulfide, or by complexing with copper. The purified $TiCl_4$ is then oxidized to TiO_2, driving off chlorine gas, which is recycled to the chlorinator. The pure TiO_2 is slurried and sent to the finishing process which includes milling, addition of inorganic and organic surface treatments, and/or spray drying of the product TiO_2. The product can be sold as a packaged dry solid or a water-based slurry.

Sulfate Process. In the sulfate process, ilmenite ore or slag with high TiO_2 content is digested with sulfuric acid, forming a porous cake; this cake is further dissolved by dilute acid to form titanyl sulfate ($TiOSO_4$). Iron may be added to the digestion process to ensure that iron impurities remain in the ferrous (Fe^{2+}) state so that the eventual TiO_2 product can be easily washed. The titanyl sulfate solution is then clarified, yielding a waste sulfate digestion sludge, and then concentrated through vacuum evaporation. The filtered titanyl sulfate solution is vacuum-evaporated a second time and hydrolyzed to precipitate hydrated titania ($TiO(OH)_2$). The titania hydrate is then filtered and washed, yielding filtrate waste and wastewater, respectively, before being calcined at 1,000°C to produce the TiO_2 product.

Chloride-Ilmenite Process. In the chloride-ilmenite process, ilmenite ore is converted to titanium tetrachloride. As in the chloride process, the chloride-ilmenite process takes place in a chlorinator in which the ore is chlorinated in the presence of coke as a reducing agent. Vent gases from the chlorinator are scrubbed prior to venting to the atmosphere. Non-volatile metal chlorides and unreacted coke and ore solids are removed from the gaseous product stream. The gaseous product stream then is purified further to separate the titanium tetrachloride from other volatile metal chloride impurities, including ferric chloride ($FeCl_3$) which is present in higher concentrations than the chloride process due to the high iron content in the ore. The separation is done via condensation and chemical treatment. The process for converting the purified $TiCl_4$ product stream to TiO_2 is similar to that used in the chloride process, as described above.

c. What kind of wastes are generated by these processes?. The wastes generated by the titanium dioxide sector are described in overview below, organized by process. Additional detail on these wastes is provided in the background document for this sector.

The wastes generated by the chloride process include:

—Commingled wastewaters, including process and non-process wastewaters from chlorinator coke and ore solids recovery, reaction and chemical tank storage scrubbers, product finishing operations, wastewater treatment and chlorinator solids decantation, and on-site landfill leachate.

—Chloride process waste solids from titanium tetrachloride production (exempt as mineral processing wastes, see 40 CFR 261.4(b)(7)).

—Wastewater treatment sludges generated by facilities that have chloride-only processes (exempt mineral processing wastes at those facilities with no contribution of solids from oxidation and finishing)
—Waste sands from finishing (milling) of the titanium dioxide product and scouring of oxidation process units.
—Vanadium wastes generated in the purification process.

The wastes generated by the sulfate process (used at two plants that also use the chloride process) include:

—Primary and secondary gypsum, which is produced when the waste sulfuric acid generated from the filtering of titanium dioxide hydrate solution is neutralized with calcium carbonate.
—Digestion sludge from the clarification of the titanyl sulfate liquor that is produced during the acid digester step.
—Wastewaters from the sulfuric acid digestion scrubber which removes acidic components and entrained solids from reaction gases, evaporator condensate from the precipitation unit, the calciner scrubber, the sulfate waste sludge settling pond supernatant, and the primary and secondary gypsum precipitation units. These wastewaters are commingled with wastewaters from the chloride process.
—Wastewater treatment sludges. These wastewater treatment sludges are generated from commingled chloride process and sulfate process wastewaters by facilities that have both processes. The wastewater treatment consists of elementary neutralization and precipitation or filtration.
—Acids from intermediate titanium product filtration/bleaching units and product calciner overhead scrubbers.
—Product milling sand from finishing operations.

The wastes generated by the chloride-ilmenite process include:

—Coke and ore solids (exempt as mineral processing wastes, see 40 CFR 261.4(b)(7)) that are not consumed by the chlorination process. These solids are conveyed through the process as part of various wastestreams.
—Waste acid (metal chloride) solution, usually called ferric or iron chloride, that is separated from the gaseous titanium tetrachloride product stream and acidified.
—Process and non-process wastewaters from reaction and oxidation scrubbers, reactant and treatment chemical storage scrubbers, product finishing, HCl storage vent scrubber, oxidation unit tank and equipment vents, supernatant or filtrate from coke and ore solids management and wastewater treatment disposal impoundments. The wastewaters are commingled prior to being introduced into the wastewater treatment system.
—Other spent scrubber waters from the reaction fume disposal system. The wastewaters are pretreated and are subsequently commingled with other wastewaters prior to being introduced to the wastewater treatment system.
—Non-exempt non-wastewaters, including the portion of wastewater treatment solids derived from the neutralization of process and non-process wastewaters from oxidation and finishing, and solids from ferric chloride filtration.
—HCl from the reaction scrubber.
—Additive feeder vent filter solids generated in the oxidation process.
—Vanadium waste generated in the purification process.
—Off-specification titanium dioxide product.
—Rail car product washout wastewater.
—Waste sand removed from a reactor purge stream (coke and ore solids)

Table III–39, below, summarizes our information about the wastes generated rom the production of titanium dioxide.

TABLE III–39.—TITANIUM DIOXIDE WASTES

Waste category	Number of generators	1998 volumes (MT)	Reported hazard codes	Management practices
Commingled chloride process wastewaters	4	7,614,358	D002, D007	Neutralization, solids settling, NPDES discharge.
Chloride process solids (Bevill exempt)	6	1,200,000	none	On-site impoundments, on-site Subtitle D landfills.
Waste sands from oxidation, milling and scouring.	3	9,485	none	On-site industrial Subtitle D landfill; off-site industrial Subtitle D landfill.
Gypsum from sulfate process	2	[46] 69,500	none	On-site waste pile storage; on-site industrial Subtitle D landfill; sold for various uses.
Digestion scrubber water	2	2,000,333		Neutralization in dedicated impoundment; commingled with other wastewaters.
Digestion sludge from sulfate process	2	41,494	D002	Unlined impoundment, dewatering, on-site industrial Subtitle D landfill.
Commingled wastewaters from the chloride and sulfate process.	2	16,184,031	none	Neutralization, solids settling in unlined surface impoundments, NPDES discharge.
Wastewater treatment sludges from commingled chloride and sulfate process (partially Bevill exempt).	2	159,121	none	Dewatering, on-site industrial Subtitle D landfill.
Waste acid (ferric chloride) from chloride-ilmenite process.	3	1,883,000	D002, D007, D008.	On-site hazardous waste underground injection; reuse as raw material in sodium chloride production; storage in tanks and unlined impoundment prior to sale as water and wastewater treatment reagent.
Chloride ilmenite process solids (Bevill exempt).	3	not reported	none	On-site dewatering; on-site Subtitle D industrial landfill; on-site unlined impoundment; various reuses.
Non-exempt nonwastewaters from the chloride-ilmenite process.	3	14,600	none	On-site dewatering; on-site Subtitle D industrial landfill; on-site unlined impoundment; various reuses.
HCl from reaction scrubber, chloride-ilmenite process.	3	not reported	D002	On-site wastewater treatment, on-site reuse.
Commingled wastewaters from the chloride-ilmenite process.	3	13,556,000	none	On-site neutralization, solids settling, NPDES discharge.

TABLE III–39.—TITANIUM DIOXIDE WASTES—Continued

Waste category	Number of generators	1998 volumes (MT)	Reported hazard codes	Management practices
Additive vent filter solids from chloride-ilmenite process.	1	< 1	none	Off-site Subtitle D industrial landfill.
Vanadium waste from the chloride-ilmenite and chloride process.	4	not reported	none	Returned to reaction area for $TiCl_4$ recovery, remaining vanadium wastes are incorporated in solids streams.
Off-spec titanium dioxide product	2	563	none	Off-site Subtitle D industrial landfill.
Railcar/trailer product washout	1	<10,000	none	On-site storage in unlined surface impoundment, on-site wastewater treatment.

[46] Additional volumes are used as products.

The manufacturers also produce materials that are reused in other processes that are outside the scope of the consent decree. With one exception described below, we did not evaluate these materials, or wastes generated during co-product production for the purposes of today's listing determinations, because they were outside the scope of the consent decree.

One facility produces sulfur from the treatment of off-gases. Because the off-gas is produced from a production unit rather than a waste management unit and is conveyed to its destination via piping, the gas is not a solid waste. RCRA Section 1004(27) excludes non-contained gases from the definition of solid waste and thus they cannot be considered a hazardous waste. (See 54 FR 50973) Because this gas is not a solid waste when produced, we did not evaluate it further for purposes of listing.

d. What wastes from these processes are exempt mineral processing wastes? In July of 1988, the U.S. Court of Appeals, for the D.C. Circuit in *Environmental Defense Fund* v. E*PA (EDF II)*, 852 F.2d 1316 (D.C. Cir. 1988), *cert. denied,* 489 U.S. 1011(1989), ordered EPA to restrict the scope of the Bevill mining waste exclusion, as it applied to mineral processing wastes. In response, EPA promulgated rules on September 1, 1989 (54 FR 36592) and on January 23, 1990 (55 FR 2322), issued a Report to Congress on Wastes from Mineral Processing on July 31, 1990, and published a regulatory determination published on June 13, 1991 (56 FR 27300). The list of Bevill exempt wastes is set out at 40 CFR 261.4(b)(7). We relied on these Bevill rulemakings to determine the Bevill status of waste streams in the titanium dioxide sector.

The production of titanium dioxide results in the generation of 2 categories of exempt waste: beneficiation wastes and exempt mineral processing wastes. These categories are described below.

The industry reported a number of wastes generated from the storage and handling of various raw materials which are exempt because they are associated with beneficiation. Solid wastes from the extraction/beneficiation of ores and minerals are Bevill exempt solid wastes (see 51 FR 24496, July 3, 1986 and 54 FR 36592, September 1, 1989). These wastes are described in the background document for this sector. We have not assessed these wastes because they are exempt under 40 CFR 261.4(b)(7).

The only relevant mineral processing waste exemption consists of ''chloride process waste solids from titanium tetrachloride production'' (see 40 CFR 261.4(b)(7)(ii)(S)). The consent decree mandating today's proposal states in paragraph 1.g that Bevill exempt wastes are not within the scope of the consent decree as it applies to the inorganic chemical listing determinations, and specifically that ''chloride process waste solids'' need not be assessed within the titanium dioxide sector. Titanium tetrachloride production occurs in both the chloride and chloride-ilmenite processes.[47]

The chloride process waste solids are generated during the chlorination reaction of the titanium ore in the reducing presence of coke at elevated temperatures, and are generated from both the chloride process and the chloride-ilmenite process. The majority of these solids are removed from the reaction area as a mass and are quenched, neutralized, settled and disposed as exempt materials. Additional solids from the reactor are carried overhead with the TiCl4 product gas stream and are subsequently removed in various scrubbing units. Although EPA has not previously discussed these solids, we believe that they also fall within the exemption. While they are removed from the product stream and various other wastes at points other than where the majority of the solids are separated from the TiCl4 gas stream, they are similarly composed of unreacted ore and coke solids from the chlorination reactor. They fit within the plain language of the exemption.

Solids also are generated from the oxidation and finishing stages of titanium dioxide production. These solids are non-exempt solid wastes (not covered by the exemption). Most titanium dioxide producers commingle wastewaters from titanium tetrachloride production with wastewaters from oxidation and finishing. To the extent that the resultant sludges contain non-exempt solids, we have assessed that portion of those solids.

Due to process variations, each facility using the chloride or chloride-ilmenite process generates its exempt solids in slightly different ways. The general principles that we used to determine the Bevill status of these wastes include the following:

—Extraction and beneficiation ends just before chlorination occurs. Wastes generated prior to this point are Bevill exempt, outside the scope of the consent decree and therefore not addressed in this rulemaking. The chlorinator marks the beginning of mineral processing because the ore undergoes a physical/chemical change (see 54 FR 36619, September 1, 1989). 54 FR 36621 further notes, ''Likewise, EPA considered titanium tetrachloride produced during the titanium chloride [sic] process to be a saleable product; any further processing subsequent to its production is considered to be chemical manufacturing.''

—Mineral processing ends when titanium dioxide is produced in the oxidation unit. Further steps are chemical manufacturing. The Agency defines the beginning of oxidation as the beginning of chemical manufacturing because the facility is using a saleable mineral product, titanium tetrachloride, to produce titanium dioxide (see 54 FR 366211).

[47] All sulfate process waste solids and liquids are non-exempt mineral processing wastes (see 55 FR 2322, January 23, 1990). 55 FR 2392 noted that all sulfate process waste solids and wastewaters from the production of titanium dioxide do not meet the high volume/low hazard criteria established in the September 1, 1989 Bevill rule and therefore were not eligible for continued coverage under the Bevill exclusion (see 54 FR 36592).

—The mineral processing exemption only covers *solids* from the production of titanium tetrachloride. These solids, therefore, are outside of the consent decree. At least six streams of solid-bearing material leave the chlorination reaction area. The status of these streams is as follows:

(1) *Titanium tetrachloride going on for further production.* All wastes formed during further processing of this gaseous product stream are chemical manufacturing wastes that are outside the scope of the Bevill exemption.

(2) *Solids removed from the gaseous titanium tetrachloride stream.* These solids are associated with the production of titanium tetrachloride. These solids are typically slurried to impoundments for storage or disposal and are Bevill-exempt (with one exception described below).

(3) *Waste acids.* In 1990 and 1998 rulemakings for LDR Phase IV (see 63 FR 28601), EPA took the position that the waste acids do not meet the high-volume, low-toxicity test and thus are not exempt mineral processing wastes.

(4) *Gases going to scrubbers.* Offgases from the chlorinators pass through various air pollution control systems which generate scrubber waters. In 1998, EPA stated that scrubber waters and sludges from scrubber waters were not Bevill-exempt. However, as a result of the information collection activities associated with today's proposal, it is now clear to EPA that gases from the chlorinator contain some solids from the chlorinator. We are interpreting the exemption today to cover these particles when they drop out of scrubber waters to form sludges. (Gas streams and wastewaters are not Bevill exempt, even when they are carrying solid particles from chlorinator.)

(5) *Solids purged from the reactor.* A purge stream from the reactor may be taken to reduce silica levels in the reactor. This stream is Bevill exempt.

(6) *Recovered solids from the reaction area.* Housekeeping results in the collection of coke and ore solids from the vicinity of the reaction area. These wastes are Bevill exempt.

In one case, the facility conducts some processing of their ferric chloride waste acid (which is subsequently sold as a water and wastewater reagent), and generates a solids stream. We consider the processing that this facility conducts to be either an ancillary process or chemical manufacturing, and thus the subsequent solids stream is not generated from mineral processing and therefore is not exempt.

What Is The Status of the Mineral Processing Exemption for ''Chloride Waste Solids From Titanium Tetrachloride Production''?

As part of our waste characterization of the titanium dioxide sector, we conducted analyses for chlorinated dibenzo-p-dioxins (CDDs) and dibenzo-p-furans (CDFs). We were concerned that these compounds might be present in the wastes as a result of the chlorination step which occurs in the presence of coke, and in fact we found measurable levels of these compounds in wastes from the chloride and chloride-ilmenite processes. These data are presented in the Titanium Dioxide Listing Background Document and associated analytical data reports in the docket for today's notice. As explained in this background document, we believe that these compounds are formed in the chlorinator, and are predominantly associated with the exempt mineral processing solids (additional details regarding this conclusion are provided in the referenced background document). These compounds were not assessed, however, as part of the rulemakings which established the mineral processing exemptions, and so these results could present new issues for these wastes if such compounds were found to pose unacceptable risks. During the development of the mineral processing exemption, EPA anticipated certain conditions might suggest the appropriateness of re-opening these exemptions.[48] We are considering whether we should re-assess the status of these wastes as exempt mineral processing wastes. Any reassessment of these wastes would involve a separate analysis and opportunity for notice and comment.

How Did EPA Assess Mixtures of Exempt and Non-Exempt Wastes From the Production of Titanium Dioxide?

There are a number of wastes from the titanium dioxide sector that remain partially within the scope of the consent decree because they are composed of both exempt and non-exempt solids. Because they are not ''100 percent exempt'' in composition, we have assessed their potential impacts on the environment, and attempted to isolate the risks associated with the non-exempt solids and wastewaters. Any assessment of the CDD and CDF loading in exempt wastes will involve a separate analysis and opportunity for notice and comment.

Finally, we are assessing one non-exempt waste generated at the Delaware facility, non-exempt non-wastewaters from the chloride-ilmenite process, which contains some CDDs and CDFs at levels exceeding our initial screening criteria. We did not, as part of today's listing determination, conduct sufficient risk assessment to fully evaluate the potential for risks. See section III.F.14.e(10) below.

5. Agency Evaluation

(1) Commingled wastewaters from the chloride process, including wastewaters from coke and ore recovery, scrubber water, finishing wastewaters and sludge supernatants.

How Many Facilities Generate This Waste Category and How Is It Managed?

Four facilities generated commingled wastewaters from the chloride process. (As will be discussed further in III.F.14.e(7), two additional facilities generate the same wastewaters and commingle them with wastewaters from the sulfate process.) Three of the four ''chloride only'' facilities treat their wastewaters in surface impoundment-based treatment systems; the fourth facility uses a tank-based wastewater treatment system. Each of the impoundment systems include unlined units. These large volume wastes are generated in excess of 29 million metric tons per year. These wastewaters are not Bevill-exempt (but convey exempt solids into the wastewater treatment system where those solids are removed to form sludges that are comprised of exempt solids and non-exempt solids, depending on the specific piping of the plants).

Many facilities commingle waste hydrochloric acids (generated as scrubber water) with their combined wastewaters. Three other facilities, however, return waste acids on site or sell the acids for reuse. Because these materials have no exposure route of concern, we did not further evaluate risk scenarios associated with reuse of this material.

What Management Scenarios Were Assessed?

For this rulemaking, we determined that the surface impoundment scenario poses a more significant potential risk than the tank scenario, and thus assessed the groundwater pathway for surface impoundments. We assessed potential groundwater releases to both surface water and drinking water wells. We concluded that the air pathway does not present significant risks for these wastes because the wastes do not contain volatile organics or other constituents that pose risk due to air releases.

How Was This Waste Category Characterized?

One of the four facilities, located in Hamilton, Mississippi, was selected for sampling and analysis. This facility's

[48] ''If EPA finds that this exemption is not protective of human health and the environment and if an examination of titanium tetrachloride waste management shows any continuing or new problems, the Agency will reconsider this subtitle D determination for chloride process waste solids from titanium tetrachloride production.'' 56 FR 273000, June 13, 1991.

waste is representative of the four chloride-only facilities. The sample was collected at the inlet to this facility's surface impoundment train.[49] This sample contained a high level of solids, reflecting the facility's practice of managing all waste solids (including Bevill-exempt solids) and process wastewaters in the same units which serve as settling ponds. To isolate the impact of the wastewater on the environment from that of the sludge, we conducted the SPLP on the waste matrix, and separately analyzed the filtrate and the leachate generated from the leaching step. We are proposing to use the filtrate analysis as representative of the wastewater portion of the commingled waste matrix (see III.E.2 and 3 for further discussion on the use of SPLP filtrate). The analytical results for the constituents found to be present in the filtrate at levels exceeding HBLs and/or AWQC are presented below in Table III–40 (the Titanium Dioxide Listing Background Document contains the full set of analytical results).

TABLE III–40.—CHARACTERIZATION OF COMMINGLED WASTEWATERS FROM CHLORIDE PROCESS, TITANIUM DIOXIDE

Constituent of concern	Detected levels in Sample KM–SI–01 (mg/L)		HBL	AWQC
	Total	SPLP Filtrate		
Antimony	<0.05	0.044	0.006	0.014
Arsenic	0.04	0.001	0.0007	0.000018
Manganese	25.9	0.46	0.73	0.05
Molybdenum	0.53	0.23	0.078	NA
Thallium	0.086	[1] <0.005	0.001	0.0017

[1] Thallium is identified as a potential constituent of concern because it was detected in the totals analysis at levels exceeding the HBL and AWQC, and the SPLP filtrate analysis detection limit was too high to confirm that mobile levels of thallium do not exceed these standards. One half the detection limit was used as input to the risk assessment (see III.E.3).

How Was the Groundwater-to-Surface Water Risk Assessment Established?

We assumed that surface impoundments present greater risks to the environment than tanks. Therefore we focused on the 3 facilities that manage wastewaters in impoundments. We selected the sampled facility for modeling because (1) its management practices (*i.e.,* treatment in surface impoundments) are representative of 3 of the 4 chloride-only facilities, (2) the analytical data for this waste were obtained from this site, and (3) its setting is similar to the other 2 facilities that use surface impoundments. The facility selected for modeling is bounded on two sides by a river, tributary creeks, and swamps. The RCRA Facility Assessment[50] for this site provides maps showing distances to these potential receptors and groundwater flow directions in the vicinity of the surface impoundments and plant-wide flow directions, with the overall flow being toward the river. We calculated infiltration rates for the unlined impoundment, and divided this flow rate into the flow rate of the river to determine potential concentrations of the five metals of concern in the river as a result of recharge with contaminated groundwater. The results of this screening (see ''Risk Assessment Support to the Inorganic Chemical Industry Listing: Background Information Document'') demonstrate that concentrations of the constituents of concern are likely to be well below risk thresholds for both human health and aquatic life in surface water.

How Was the Groundwater Ingestion Risk Assessment Established?

We were able to collect specific information regarding the physical setting of the modeled facility, and thus used primarily site-specific data as input to the risk assessment. We chose this site for modeling because the amount of available information best supported our data requirements for modeling and because we believe this facility is representative of other generators of this waste category in terms of hydrogeological setting and waste characterization. Based on information presented in the RFA for the facility of concern, as well as from the U.S. Geological Survey Ground-water Site Inventory, there are groundwater wells north of the plant. The RFA also indicates that groundwater flow direction in the localized vicinity of the surface impoundments is to the northwest. We modeled the potential impact of the unlined portion of the surface impoundment train on drinking water wells located within 2,000–5,000 feet (based on well locations and the closest facility property lines). The resultant concentrations are presented below in Table III–41.

TABLE III–41.—GROUNDWATER PATHWAY RISK ASSESSMENT RESULTS FOR COMMINGLED WASTEWATERS FROM CHLORIDE PROCESS, TITANIUM DIOXIDE

Constituent of concern	Risk or hazard quotient			
	90th%		95th%	
	Adult	Child	Adult	Child
Antimony HQ	0.1	0.2	0.2	0.5
Arsenic cancer risk	2E–08	2E–08	8E–08	6E–08
Molybdenum HQ	0.03	0.07	0.06	0.1

[49] This facility also commingles wastewaters from sodium clorate production, which account for approximately 1.7 percent of the total 4aste volume.

[50] U.S. EPA RCRA Facility Assessment of Kerr McGee Chemical Corporation; Hamilton, MS. June 16, 1995.

TABLE III–41.—GROUNDWATER PATHWAY RISK ASSESSMENT RESULTS FOR COMMINGLED WASTEWATERS FROM CHLORIDE PROCESS, TITANIUM DIOXIDE—Continued

Constituent of concern	Risk or hazard quotient			
	90th%		95th%	
	Adult	Child	Adult	Child
Thallium HQ	0.02	0.03	0.03	0.07

What Is EPA's Listing Rationale for This Waste?

We propose not to list commingled wastewaters from the production of titanium dioxide via the chloride process. The results of our risk assessment show that this waste category does not pose significant risk to human health and the environment. Our assessment of the air and surface water exposure pathways shows no risk of concern. Our assessment of the groundwater exposure pathway similarly shows no risk of concern for the constituents of concern.

(2) Chloride process solids (Bevill exempt). Six facilities generate waste solids from the chloride process. As previously discussed, the Agency determined at 56 FR 27312 (June 13, 1991) that chloride process waste solids from titanium tetrachloride production are Bevill exempt mineral processing wastes (40 CFR 261.4(b)(7)(ii)(S)). Five of the six facilities generate their solids in surface impoundments; the sixth, located in Louisiana, uses tank-based settling to segregate the solids from their wastewaters. All six facilities dispose of their solids in their surface impoundments or on-site landfills. Approximately 1.2 million MT of this waste was generated in 1998.[51] The waste solids at each of these sites contains contributions from Bevill exempt solids ranging from 100% to 40%, as discussed further below.

At the two facilities located in Georgia and Louisiana, coke and ore solids are generated as entirely segregated wastes that are not commingled with non-exempt solids; these exempt wastes are clearly outside the scope of the consent decree dictating today's proposal and have not been assessed further.

At three other facilities, the facilities conduct some commingling of their wastewaters, resulting in small potential contributions of non-exempt solids to their waste solids. Two of these facilities, both located in Ohio, commingle wastewaters from oxidation and finishing (*i.e.,* generated after the production of titanium tetrachloride and therefore potentially bearing non-exempt solids) with the wastewaters from titanium tetrachloride production that bear exempt solids. Neither facility reported any solids in their oxidation and finishing wastewaters, although data from similar wastewaters from the chloride-ilmenite process indicate that very low levels of solids can be present in similar wastewaters. (We assess solids from the chloride-ilmenite process in section III.F.14.e(10) of this proposal.) At the third facility (located in Mississippi), which operates a slightly different process, there were no reported wastewaters or solids from oxidation and finishing. Note that the wastewaters bearing the exempt solids at this facility are commingled with comparatively small volumes of wastewaters from sodium chlorate production (described in section III.F.11 of today's proposal).[52] We believe that the contribution of any non-exempt solids to the volume of exempt solids from these three facilities would be very small. Thus, we have chosen not to attribute any risks to the nonexempt portion of these commingled solids.

Two of the six facilities generating chloride process waste solids also operate sulfate-based titanium dioxide production lines. These plants are sited in Georgia and Maryland. Wastewaters from the chloride process and sulfate processes are commingled and results in commingled wastewater treatment solids that are partially composed of exempt solids. The non-exempt wastewater treatment solids are described separately in section III.F.14.e(8). They contain significant volumes of non-exempt solids (>35%).

(3) Various sands from oxidation, milling and scouring.

How Many Facilities Generate This Waste Category and How Is It Managed?

Two facilities using the chloride process reported disposal of 250 MT of milling sand in off-site and dedicated on-site Subtitle D landfills. One facility also reported landfilling over 2,300 MT of scouring sand. One facility reported 6,935 MT/yr of waste oxidation sand that is managed in an on-site industrial Subtitle D landfill. All of these sands are similar and are associated with titanium dioxide finishing operations. All of these sands are produced after the beginning of chemical manufacturing and therefore are not exempt.

What Management Scenarios Were Assessed?

We assessed the off-site industrial landfill scenario for milling sand and a dedicated on-site landfill for scouring sand, reflecting the types of management reported for these wastes. We assessed the groundwater ingestion pathway for these landfills. The on-site landfill scenario for scouring sand screened out when we compared the SPLP results for this waste directly to the HBLs.

How Was This Waste Category Characterized?

We collected samples of both the milling sand and the scouring sand. We conducted total, TCLP and SPLP analyses on the waste matrix. We used the SPLP results (rather than the TCLP) to assess potential releases to groundwater because there is no contact with municipal landfill leachate in the reported management practices, and no indication that other practices are likely. The SPLP analytical results of concern for the milling sand are presented below in Table III–42.

[51] This waste volume includes the non-exempt sulfate solids generated at one of the 2 facilities that commingle wastes from the chloride and sulfate processes.

[52] The sodium chlorate wastewaters account for only 1.7% of the total volume of managed wastewater, and for only 4.4% of the solids generated. The predominant potential constituent of concern in the sodium chlorate solids is chromium; analytical data for the commingled solids (KM–SI–04) show that the SPLP concentration is <0.05 mg/L and not of concern. See section III.F.11 for further discussion of this facility's sludge.

TABLE III–42.—CHARACTERIZATION OF MILLING SAND FROM TITANIUM DIOXIDE PRODUCTION

Constituent of concern	Detected SPLP levels in KP–SO–05 (mg/L)	HBL (mg/L)
Antimony	0.024	0006

How Was the Groundwater Ingestion Risk Assessment Established?

As described in Section III.D.4. we used our standard distance-to-well assumptions for an off-site landfill, and assumed hydrogeologic conditions would be comparable to those for the reported off-site landfill. As shown in Table III–43, the resultant risks were calculated.

TABLE III–43.—GROUNDWATER PATHWAY RISK ASSESSMENT RESULTS FOR MILLING SAND FROM TITANIUM DIOXIDE PRODUCTION

Antimony HQ		
Percentile	Adult risk	Child risk
90th	0.003	0.006
95th	0.008	0.02

What is EPA's Listing Rationale for This Waste?

We propose not to list this waste because the modeled and screening risk for antimony, the sole constituent of concern, is well below a hazard quotient of unity.

(4) Gypsum from the sulfate process.

How Many Facilities Generate This Waste Category and How Is It Managed?

The Maryland and Georgia facilities generate this waste. Both sites pipe their acid directly to their gypsum plants where it is neutralized to form gypsum. We found no significant potential for release of this acid waste prior to its treatment in the gypsum plant. The two facilities reported production of 69,500 MT/yr of gypsum that is landfilled.[53] We chose to look further at this material because it is disposed of in a landfill and used in a manner constituting disposal (*i.e.*, as fertilizer), and because the generators conduct on-site land placement (piles). Specifically, the Georgia facility places their gypsum in piles prior to sale for use in agricultural chemicals, cement, chemical products, and wall board. The Maryland facility generates primary and secondary gypsum, both of which are also placed in piles prior to use in wall board manufacture or disposal in an on-site landfill. As described above, the gypsum is not an exempt mineral processing waste because this sulfate process wastestream did not meet the high volume/low toxicity criteria noted in 54 FR 36592 (September 1, 1989).

What Management Scenarios Were Assessed?

We assessed each of the reported management scenarios that involve land placement: agricultural chemicals, cement, piles and landfills. We evaluated potential releases to both air and groundwater. Samples were collected at both facilities, and included both primary and secondary gypsum samples at the Maryland site. The management scenarios were assessed using the appropriate sample for the type of gypsum reported for that scenario. All pathways screened out except for the landfill scenario at the Maryland site. For the Maryland landfill we found constituent concentrations at levels of potential concern for the groundwater and surface water pathways. The primary gypsum contained lower levels of leachable metals than the secondary gypsum; we focused our modeling efforts on the higher volume secondary gypsum as it was more likely to show risk when modeled and the management scenarios are identical (they are placed in the same on-site industrial landfill). The screening results are discussed further in the ''Titanium Dioxide Listing Background Document for the Inorganic Chemical Listing Determination,'' available in the docket for today's notice.

We assessed the landfill scenario for potential impacts to both surface water and drinking water wells. The facility selected for modeling is bounded to the north and east by the Patapsco River, which is an estuary. The expected groundwater flow, while not characterized definitively, is expected to be eastward, toward the river.[54]

How Was This Waste Category Characterized?

We collected three samples of this waste for analysis. We conducted total, TCLP and SPLP analyses on the waste matrices. We used the SPLP results (rather than TCLP) to assess potential releases to groundwater and surface water because there is no contact with municipal landfill leachate in the reported management practices. We used total results to assess potential air releases, and this pathway screened out. The SPLP analytical results for the secondary gypsum that we used to assess groundwater releases from landfilling are presented below in Table III–44.

TABLE III–44.—CHARACTERIZATION OF SECONDARY GYPSUM FROM SULFATE PROCESS, TITANIUM DIOXIDE

Constituent of concern	Detected SPLP levels in MI–SO–03 (mg/L)	HBL (mg/L)	AWQC (mg/L)
Antimony	0.055	0.006	0.014
Arsenic	<0.0035	0.0007	0.000018
Manganese	3.1	0.73	0.05

[53] Additional volumes are used as products.

[54] See ''Update of the Hazardous Waste Groundwater Task Force'', April 1998. Maryland Department of the Environment. RCRA Operation and Maintenance Inspection of SCM Chemicals (now Millennium Inorganic Chemicals, Inc.); Hawkins Point Plant; Baltimore, MD. October 1994.

How Was the Groundwater-to-Surface Water Risk Assessment Established?

We calculated infiltration rates for the unlined landfill, and divided this flow rate into the flow rate of the river to determine potential concentrations of the three metals of concern (see Table III–44) in the river as a result of recharge with contaminated groundwater. The results of this screening (available in the Risk Assessment Background Document) demonstrate that concentrations of the constituents of concern are expected to be well below risk thresholds for human health and aquatic life in surface water.

How Was the Groundwater Ingestion Risk Assessment Established?

While we are not aware of any actual drinking water wells in the vicinity of the Maryland facility, we were unable to determine definitively that there are not private wells in use in the residential area to the south of the facility, or that potentially contaminated groundwater would not reach this neighborhood. We thus decided to model potential exposure at this neighborhood. We modeled the potential impact of the unlined landfill on drinking water wells located within 2,500–5,000 feet (based on distances to the nearest residential area). The resultant risks were calculated and are summarized in Table III–45.

TABLE III–45.—GROUNDWATER PATHWAY RISK ASSESSMENT RESULTS FOR SECONDARY GYPSUM FROM SULFATE PROCESS, TITANIUM DIOXIDE

	Antimony HQ		Arsenic—cancer risk		Manganese HQ	
	Adult risk	Child risk	Adult risk	Child risk	Adult risk	Child risk
90th	0.23	0.49	6.E–07	4.E–07	0.1	0.2
95th	0.35	0.75	1.E–06	1.E–06	0.1	0.3

What is EPA's Listing Rationale for This Waste?

We propose not to list gypsum from the sulfate process. The results of our risk assessment demonstrate that there is no significant risk associated with this material, and that it does not warrant control as a listed hazardous waste. At the 95th percentile, the risks for antimony (HQ=0.75) and arsenic ($1E^{-6}$), approach levels at which EPA considers listing wastes (HQ=1.0 and cancer risk>10^{-6}, respectively). We believe that our modeled exposure scenario, while plausible, contains a number of conservative assumptions that likely overstate these marginal risks. In particular, our assumptions regarding groundwater flow direction (*i.e.,* that a contaminated plume from the landfill would flow to the south toward the nearest residences, rather than due west toward the river) and the use of groundwater for drinking water at these residences (records indicate this community uses public water) may overstate actual risks.

(5) Digestion scrubber water from the sulfate process.

How Many Facilities Generate This Waste Category and How Is It Managed?

The Maryland and Georgia facilities reported generation of digestion scrubber water from the sulfate process. The Maryland facility manages this wastewater in a dedicated surface impoundment after neutralization. The other facility commingles this wastewater with other wastewaters from their chloride and sulfate processes. As described above, the gypsum is not an exempt mineral processing waste because this sulfate process wastestream did not meet the high volume/low toxicity criteria noted in 54 FR 36592 (September 1, 1989). (See 40 CFR 261.4(b)(7)(ii).)

What Management Scenarios Were Assessed?

We assessed the waste in its commingled form as managed by the Maryland facility, as described below in section III.F.14.e(7). We also modeled the dedicated surface impoundment scenario using the physical parameters describing the dedicated Georgia impoundment. This impoundment is placed directly on the banks of a river, and thus we were primarily concerned with potential releases to surface water. We did not model a drinking water well scenario because there are no constituents of concern in this wastewater at levels exceeding HBLs.

How Was This Waste Category Characterized?

We collected one sample of this waste for analysis. We conducted total analyses (leaching was not conducted given the low levels of percent solids in this waste), which are summarized below in Table III–46 for the constituents of potential concern.

TABLE III–46.—CHARACTERIZATION OF DIGESTION SCRUBBER WATER FROM SULFATE PROCESS, TITANIUM DIOXIDE

Constituent of concern	Detected levels in MI–WW–03 (mg/L)	HBL (mg/L)	AWQC (mg/L)
Aluminum	0.58	16	0.087
Manganese	0.58	0.73	0.05
Mercury	0.0032	0.005	0.000050

How Was the Groundwater-to-Surface Water Risk Assessment Established?

We calculated infiltration rates for the unlined surface impoundment, and divided this flow rate into the flow rate of the river to determine potential concentrations of the three metals of concern (see Table III–46) in the river as a result of recharge with contaminated groundwater. The results of this screening (available in the Risk Assessment Background Document) demonstrate that concentrations of the constituents of concern are likely to be

well below risk thresholds for human health and aquatic life in surface water.

What is EPA's Listing Rationale for This Waste?

We propose not to list digestion scrubber water from the production of titanium dioxide via the sulfate process. The results of our risk assessment show that this waste category does not warrant listing as a hazardous waste.

(6) Sulfate process digestion sludges.

How Many Facilities Generate This Waste Category and How Is It Managed?

The Maryland and Georgia facilities generate this sludge. The Georgia facility manages it in a dedicated surface impoundment and the Maryland facility places it in an on-site landfill. As described above, the waste is not an exempt mineral processing waste because this sulfate process wastestream did not meet the high volume/low toxicity criteria noted in 54 FR 36592 (September 1, 1989). (See 40 CFR 261.4(b)(7)(ii).)

What Management Scenarios Were Assessed?

We assessed both management scenarios using the respective samples collected at each facility. The surface impoundment scenario screened out; the levels of constituents in the wastewater were below HBLs and AWQC. We modeled the landfill scenario for potential releases to both groundwater drinking wells and surface water.

How Was This Waste Category Characterized?

We collected one sample of this waste for analysis at the Maryland facility. We conducted total, TCLP, and SPLP analyses. We used the SPLP results as inputs to the on-site landfill, which are summarized below in Table III–47 for the constituents of potential concern.

TABLE III–47.—CHARACTERIZATION OF DIGESTION SLUDGE FROM SULFATE PROCESS, TITANIUM DIOXIDE

Constituent of concern	Detected SPLP Levels in MI–SO–02 (mg/L)	HBL (mg/L)	AWQC (mg/L)
Aluminum	2.0	16	0.087
Antimony	0.023	0.006	0.014
Copper	0.37	1.3	0.0031
Iron	12.0	5	1
Lead	[1] 0.004	0.015	0.0025
Manganese	0.36	0.73	0.05
Vanadium	0.42	0.14	
Zinc	0.30	4.7	0.12

[1] Results are less than the typical laboratory reporting limit, but are greater than the calculated instrument detection limits.

How Was the Groundwater-to-Surface Water Risk Assessment Established?

We calculated infiltration rates for the landfill, and divided this flow rate into the flow rate of the river to determine potential concentrations of the three metals of concern (see preceding table) in the river as a result of recharge with contaminated groundwater. Note that this is the same Maryland landfill described elsewhere in III.F.14.e(4) and (8). The results of this screening (available in the Risk Assessment Background Document) demonstrate that concentrations of the constituents of concern are likely to be well below risk thresholds for human health and aquatic life in surface water.

How Was the Groundwater Ingestion Risk Assessment Established?

See the comparable discussion for the gypsum (III.F.14.e(4)). The groundwater ingestion scenario was assessed for antimony and vanadium because the detected SPLP concentrations exceeded their respective HBLs. We did not assess the iron HBL exceedence because the HBL is at or above the solubility limit in ground water under most conditions. The resultant risks were calculated and are summarized in Table III–48.

TABLE III–48.—GROUNDWATER PATHWAY RISK ASSESSMENT RESULTS FOR DIGESTION SLUDGE FROM SULFATE PROCESS, TITANIUM DIOXIDE

	Antimony HQ		Vanadium HQ	
	Adult risk	Child risk	Adult risk	Child risk
90th	0.13	0.27	0.02	0.03
95th	0.18	0.39	0.03	0.07

What Is EPA's Listing Rationale for This Waste?

We propose not to list this waste. The results of our risk assessment modeling show that this waste does not contain mobile metals that are likely to pose risk to human health and the environment due to transport through the subsurface.

(7) Commingled wastewaters from the chloride and sulfate process.

How Many Facilities Generate This Waste Category and How Is It Managed?

The Maryland and Georgia facilities generate this waste category. Both facilities neutralized their commingled wastewaters and manage them in surface impoundments prior to NPDES discharge (but convey exempt solids into the wastewater treatment system where those solids are removed to form sludges that are comprised of exempt solids and non-exempt solids, depending on the specific piping of the plants).

What Management Scenarios Were Assessed?

We collected samples at both facilities at the influent to their surface impoundment trains. We screened the

risk at both facilities using the analytical data describing their respective wastes. We concluded that the Georgia facility was not a modeling candidate because none of the constituents detected in its waste exceeded our health-based levels or the ambient water quality criteria. At the Maryland facility, we modeled the surface impoundment scenario using the physical parameters describing their unlined impoundment. We assessed both the surface water and drinking water well scenario.

How Was This Waste Category Characterized?

The sample contained a high level of solids, reflecting the facility's practice of managing all waste solids and process wastewaters in the same unit. To isolate the impact of the wastewater on the environment from that of the sludge, we conducted the SPLP on the waste matrix, and separately analyzed the filtrate and the leachate generated from the leaching step. We are proposing to use the filtrate analysis as representative of the wastewater portion of the commingled waste matrix. The analytical results for the constituents found to be present in the filtrate at levels exceeding HBLs and/or AWQC are presented below in Table III–49.

TABLE III–49.—CHARACTERIZATION OF COMMINGLED WASTEWATERS FROM CHLORIDE AND SULFATE PROCESS, TITANIUM DIOXIDE

[mg/L]

Constituent of concern	Detected levels in sample MI–WW–04		HBL	AWQC
	Total	SPLP Filtrate		
Arsenic	0.022	<0.005 (1)	0.0007	0.000018
Manganese	119	9.95	0.73	0.05
Thallium	0.005	0.004	0.001	0.0017

(1) 1/2 the detection limit was used as input to the risk assessment.

How Was the Groundwater-to-Surface Water Risk Assessment Established?

We calculated infiltration rates for the surface impoundment, and divided this flow rate into the flow rate of the river to determine potential concentrations of the two metals of concern (see preceding table) in the river as a result of recharge with contaminated groundwater. The results of this screening (available in the Risk Assessment Background Document) demonstrate that concentrations of the constituents of concern are likely to be well below risk thresholds for human health and aquatic life in surface water.

How Was the Groundwater Ingestion Risk Assessment Established?

See the comparable discussion for the gypsum (III.F.14.e(4)). The resultant risks were calculated and are summarized in Table III–50.

TABLE III–50.—GROUNDWATER PATHWAY RISK ASSESSMENT RESULTS FOR COMMINGLED WASTEWATERS FROM CHLORIDE AND SULFATE PROCESSES, TITANIUM DIOXIDE

Constituent of concern	90th percentile		95th percentile	
	Adult	Child	Adult	Child
Arsenic cancer risk	5E–08	3E–08	2E–07	1E–07
Manganese HQ	0.009	0.02	0.02	0.04

What Is EPA's Listing Rationale for This Waste?

We propose not to list commingled wastewaters from the production of titanium dioxide from the chloride and sulfate processes. The results of our risk assessment demonstrate that this waste category does not pose risks warranting listing as hazardous waste. Arsenic levels at the receptor result in cancer risks well below 1E–06, and manganese levels at the receptor are similarly well below a hazard quotient of one.

(8) Wastewater treatment sludges from commingled chloride-and sulfate-process wastewaters.

How Many Facilities Generate This Waste Category and How Is It Managed?

Two facilities, sited in Georgia and Maryland, generate this waste category, and after de-watering, place their sludges in on-site landfills. Over 159,000 MT of this waste was generated in 1998.

What Is the Bevill Exemption Status of This Waste Category?

As discussed above, the chloride process waste solids are exempt mineral processing wastes, to the extent that they are associated with the titanium tetrachloride process. Data provided by these two facilities, however, show that these waste contain at least 35% non-exempt solids. Our quantitative assessment of the potential risk associated with these non-exempt solids is provided here.

The wastewater treatment solids at the Maryland site are derived from at least four primary sources. Two residuals from the chloride process contribute exempt solids (*i.e.*, solids slurry and scrubber water from the reaction area) as identified in 261.4(b)(7)(ii)(S) and discussed above in III.F.14.e(2). Two scrubber waters from the calcination [55] and finishing portion of the sulfate process contribute non-exempt solids to the wastewater treatment solids (sulfate process wastes

[55] Although wastes from calcining are generally treated as Bevill exempt extraction/beneficiation wastes, wastes from titanium dioxide calcination are post-mineral processing, chemical manufacturing wastes. The Agency noted at 54 FR 36619, ''As discussed in the April NPRM, the Agency considers any operations following the initial [mineral] processing operation to be [mineral] processing operations, regardless of whether the activity was included on the list of RTC beneficiation activities or has traditionally been considered beneficiation.'' Therefore, since mineral processing ends and chemical manufacturing starts at the beginning of oxidation, and the calcining step occurs after oxidation, all wastes generated from the calcining step are non-exempt wastes.

are not exempt because, as described above, the sulfate process wastestreams did not meet the high volume/low toxicity criteria noted in 54 FR 36592 (September 1, 1989)). Additional potential sources of minor amounts of solids are other wastewaters that are treated in this facility's wastewater treatment system, including cooling water, stormwater, drainage water and landfill leachate. Based on the information reported in this facility's § 3007 survey response, we estimate that their wastewater treatment solids are more than 35% non-exempt.

The wastewater treatment solids at the Georgia site are derived from at least six sources. Two residuals from the chloride process contribute exempt solids (*i.e.*, waste acid from the chloride reaction area and supernatant from the chloride solids impoundment) (261.4(b)(7)(ii)(S)). Finishing wastewaters from the chloride process contribute non-exempt solids (these wastewaters are generated from the chemical manufacturing end of the production process). At least three wastewaters from the sulfate process contribute non-exempt solids. Based on the information reported in this facility's § 3007 survey response, we estimate that their wastewater treatment solids are significantly more than 35% non-exempt.

What Management Scenarios Were Assessed?

We collected samples of both facilities' wastes and therefore assessed the management practices at the two sites individually. The Maryland facility treats its wastewater in surface impoundments; the sludge is generated from a filter press, and the facility then places the sludge in an on-site landfill. We assessed potential groundwater releases to both surface water and drinking water wells from this landfill. The Georgia facility dredges its sludge from its surface impoundments, filter presses the solids, places the filter solids in piles for further drainage and air drying, and then places the filter solids in an industrial on-site landfill. We assessed the groundwater pathways for the landfill and pile, and the air pathway for the pile. (Note that we elsewhere assess the groundwater impact of the Maryland surface impoundments using sampling data for the wastewater in that unit. See III.F.14.e(7)). All pathways for the Georgia facility screened out and are not discussed further in this notice (see the ''Titanium Dioxide Listing Background Document for the Inorganic Chemical Listing Determination'' for details of this screening).

How Was This Waste Category Characterized?

Both facilities were selected for sampling and analysis. Both samples were collected from filter cake discharge of the filter press. We conducted total, TCLP and SPLP analyses on the waste matrix. We used the SPLP results (rather than the TCLP) to assess potential releases to groundwater and surface water because there is no potential for contact with municipal landfill leachate in the reported management practices for these two facilities. Given the large waste quantities reported for this category, we believe it would be prohibitively expensive for off-site disposal to occur. We used total results to assess potential air releases from the piles, and found no significant risks. The SPLP analytical results used to assess groundwater releases at the Maryland facility that generates commingled chloride/sulfate wastewater treatment sludge (as described in the previous paragraph) are presented below in Table III–51.

TABLE III–51.—CHARACTERIZATION OF COMMINGLED WASTEWATER TREATMENT SLUDGES FROM CHLORIDE AND SULFATE PROCESSES, TITANIUM DIOXIDE

Constituent of concern	Detected SPLP levels in MI–SO–01 (mg/L)	HBL (mg/L)	AWQC (mg/L)
Aluminum	0.24	16	0.087
Arsenic	[1] 0.00005	0.0007	0.000018
Manganese	2.63	0.73	0.05
Thallium	[1] 0.003	0.001	0.0017

[1] Estimated results are less than the typical laboratory reporting limit, but are greater than the calculated instrument detection limits.

In addition to the metals described above, our analytical data show that this waste contains polychlorinated dioxins and furans (PCDD/F). These data are provided in the background document for the titanium dioxide sector. As discussed previously (III.F.14.d), we believe that these contaminants are clearly associated with the exempt solids contained in this waste, and thus we did not assess them. Samples collected at these two facilities bear out this association with the exempt solids. The Maryland facility, which does not segregate any of its exempt solids from other wastewater treatment solids, has significantly higher PCDD/F levels than the Georgia facility (*i.e.*, several orders of magnitude), which segregates the majority of its exempts solids from its wastewater treatment solids.

How Was the Groundwater-to-Surface Water Risk Assessment Established?

The Maryland facility selected for modeling this scenario was also modeled for several other wastes, and is described further in section III.F.14.e(5) above. We calculated infiltration rates for the unlined landfill, and divided this flow rate into the flow rate of the river to determine potential concentrations of the four metals of concern (see preceding table) in the river as a result of recharge with contaminated groundwater. The results of this screening (available in the Risk Assessment Background Document) demonstrate that concentrations of the constituents of concern are likely to be well below risk thresholds in surface water.

How Was the Groundwater Ingestion Risk Assessment Established?

The facility selected for modeling this scenario was also modeled for several other wastes, and is described further in section III.F.14.e(4) above. The resultant risks were calculated and are summarized in Table III–52.

TABLE III–52.—GROUNDWATER PATHWAY RISK ASSESSMENT RESULTS FOR COMMINGLED WASTEWATER TREATMENT SLUDGES FROM CHLORIDE AND SULFATE PROCESSES, TITANIUM DIOXIDE

	Manganese HQ		Thallium HQ	
	Adult risk	Child risk	Adult risk	Child Risk
90th	0.1	0.3	0.1	0.3
95th	0.2	0.5	0.2	0.4

What Is EPA's Listing Rationale for This Waste?

We are proposing not to list commingled wastewater treatment sludges from chloride and sulfate processes because our modeling of potential groundwater releases shows no risk at levels which warrant listing this waste as hazardous. No scenario modeled (groundwater-to-surface water and groundwater-to-drinking water wells) showed risk at levels of regulatory concern.

(9) Waste acid (ferric chloride) from the chloride-ilmenite process.

How Many Facilities Generate This Waste Category and How Is It Managed?

All three facilities that utilize the chloride-ilmenite process generate this waste category. The DeLisle, Mississippi facility identifies the waste as characteristic for corrosivity, chromium and lead and disposes of its waste in an on-site underground injection well. The Tennessee facility pipes its ferric chloride to an on-site sodium chloride plant. Both the Mississippi and Tennessee facilities generate the majority of their exempt-mineral processing solids from the filtration of this waste acid. The Delaware facility's process is slightly different in that the majority of their exempt solids are generated prior to the generation of the waste acid, and only a relatively small portion of their solids are generated from the removal of solids from this waste. The Delaware facility adds a processing chemical to their waste acid, removes solids, stores the acid in tanks (as well as an on-site surface impoundment when their tank capacity is exceeded), and sells the acid to a broker for resale as a wastewater and drinking water treatment reagent. However, EPA is not at this time assessing whether the ferric chloride is a legitimate product. We did not attempt to address this complex and site-specific issue in this proposal. We note that the Delaware facility uses a surface impoundment to store a portion of the ferric chloride prior to its sale as a water and wastewater treatment reagent. EPA has often considered land-based units, and impoundments in particular, to be associated with the discard of wastes, rather than the storage of products, because of their potential for releases to the environment.[56] In addition, we sampled the ferric chloride at the Delaware facility and found that it contains a variety of metals, as well as some chlorinated dioxins and furans. (See the background document for this sector for more details on this sampling and analysis). These factors may lead to concerns about the legitimacy of the use of this material as a drinking water and wastewater treatment reagent. However, as explained below, we do not need to resolve this issue to make a decision about listing ferric chloride.

This waste routinely exhibits the characteristic of corrosivity and the toxicity characteristic for chromium and lead. All three generators of the ferric chloride waste acid acknowledge the hazardous nature of this waste. Each generator reported pH levels at 1 or less, and the one facility that disposes of this waste via deep well injection assigns three separate characteristic codes to this material. EPA sampled the ferric chloride at the Delaware facility, and both EPA and the facility analyzed the waste. The results showed that this material exhibits the characteristics of D001, D007, and D008.

What Is the Bevill Status of This Waste?

Ferric chloride waste acid is a liquid mineral processing waste that did not meet the high volume/low toxicity criteria for determining eligibility for the Bevill exemption and therefore is not Bevill-exempt (see 63 FR 28601).

[56] Surface impoundments pose essentially inherent risks of groundwater contamination due to the hydraulic pressure created by the contained liquids. Chemical Waste Management v. EPA, 919 F.2d 158, 166 (D.C. Cir. 1992). Material that is placed in a surface impoundment, where it is capable of posing a substantial present or potential hazard to human health or the environment when improperly treated, stored, transported or disposed of or otherwise managed, ''by leaching into the ground, is 'discarded material' and hence a solid waste.'' (AMC II, 907 F.2d) Although secondary materials may have value and be reused, their value does not protect them from being considered solid wastes for the purposes of RCRA regulation if they are discarded prior to use (API, 906 F.2d at 741 n.16).

What Is the Bevill Status of Solids Removed From This Waste?

Prior to disposal or reuse of their waste acids, both the Mississippi and Tennessee plants filter their waste acid to remove the exempt solids. At the Delaware site, however, the waste acid is processed via the addition of a chemical prior to solids removal. The purpose of the chemical addition is to modify the properties of the waste acid to enhance its value as a saleable potable water and wastewater treatment reagent.

The addition of this chemical at the Delaware plant marks the end of titanium tetrachloride production (*i.e.*, mineral processing) and the beginning of ferric chloride production (assuming ferric chloride is a legitimate product). Ferric chloride production can be considered either chemical manufacturing[57] or an ancillary process.[58] Consequently, as explained below in section III.F.14.e(10), solids removed from the ferric chloride at the Delaware plant are not Bevill-exempt.

What Is EPA's Listing Rationale for This Waste?

We are proposing to not list this waste and rely instead on the existing regulatory controls provided by the hazardous waste characteristics. Data from all three facilities clearly demonstrates that this waste exhibits several of the characteristics. At this time we have not determined whether any of the facilities are out of compliance. State and EPA authorities are examining these sites in detail for compliance with the existing regulations. Listing would not serve to better establish this jurisdiction.

The Mississippi facility that injects this waste identifies the waste as hazardous and manages it as a hazardous waste under Subtitle C regulations. Within the context of this consent decree, we did not investigate in depth the Tennessee facility's use of this material in production of sodium

[57] 54 FR 36616, September 1, 1989.

[58] All wastes from ancillary activities are not uniquely associated with extraction/beneficiation and processing of ores and minerals (see 45 FR 76619, November 19, 1980, and 63 FR 28590, May 26, 1998).

chloride (an inorganic chemical not identified as one of the 14 products of concern in the consent decree) because there was no known exposure route associated with the management of the material prior to inserting it into a non-consent decree production process. As discussed previously, the Delaware facility stores the material in a surface impoundment. EPA can address concerns, if appropriate, by the use of enforcement, based on the existing characteristics associated with this material. In addition, the questions framed above about the potential legitimacy of this facility's use of ferric chloride as a product and its storage in a surface impoundment are equally relevant whether the ferric chloride is listed as a hazardous waste or is known to exhibit the characteristics of hazardous waste. Therefore we have decided to not list this waste as a hazardous waste and rely on the hazardous characteristics of the material for any necessary control.

(10) Non-exempt nonwastewaters from the chloride-ilmenite process.

How Many Facilities Generate This Waste Category and How Is It Managed?

All three chloride-ilmenite facilities generate wastes that contain commingled exempt and non-exempt components. Depending on the specific configuration of the individual plants, these wastes are composed to different degrees of exempt and non-exempt solids, as described further below.

Solids are generated in several places in the chloride ilmenite process:

—Coke and ore solids are removed from the gaseous titanium tetrachloride product stream, quenched and neutralized. While the Agency believes this stream is largely exempt, we note that any contributions to this stream from the disposal of the vanadium waste is non-exempt.

—Solids are generated during wastewater treatment and are non-exempt to the extent they are generated from oxidation and finishing wastewaters.

—Coke and ore solids can also be generated from the removal of solids from waste acid. These residuals may contain a non-exempt portion if they are partially comprised of vanadium waste. These solids cannot be exempt if they are removed from the waste acid after the initiation of chemical manufacturing and/or ancillary operations.

We assessed these various sources of non-exempt materials as one waste category because of the expected similarities among these materials and the commingled management practices used by these facilities. The total non-exempt portion of this waste category is approximately 10% with variations among the three sites. The specific sources of non-exempt materials for each of the three chloride-ilmenite facilities is described below.

All three facilities generate non-exempt vanadium waste when they separate vanadium compounds from titanium tetrachloride. The facilities reinsert these materials into the reaction area. Titanium tetrachloride is recovered and maybe reused; however, the remainder of this waste is not reused and is incorporated into the unreacted coke and ore solids stream from the reaction area, the solids separated from the ferric chloride, or the ferric chloride. This vanadium waste is not exempt because it is not a solid. However we were not able to determine the volume contribution of this vanadium waste to the various wastes into which it is ultimately incorporated. Hence, the estimates of total exempt solids provided below are likely to be underestimated. (This waste is also discussed in III.F.14.e(14) below.)

The Delaware facility combines and neutralizes three sources of solids (reactor solids, solids removed from ferric chloride waste acid, and solids from wastewater treatment), and markets the resulting material as ''Iron Rich'' material. As asserted by the company, uses of Iron Rich include structural fill, landfill caps and covers, and construction of dikes for containment of dredged spoils on the Delaware River. The facility may also stabilize some portion of the Iron Rich with fly ash prior to sale. Each component of the Delaware commingled residuals is described in the following paragraphs.

The majority of the commingled Delaware solids are unreacted coke and ore materials that are removed from the gaseous titanium tetrachloride product stream after the reactor. These ''reactor solids'' make up more than 80% of the volume of commingled ''Iron Rich'' at this facility. This stream is comprised of exempt chloride process solids and non-exempt vanadium waste.

The Delaware facility also removes solids from its ferric chloride. This solids removal step takes place after the facility incorporates a chemical additive into the ferric chloride. We have concluded that the use of this chemical constitutes chemical processing that is outside the scope of the Bevill exemption (see 54 FR 36592, September 1, 1989 and previous waste acid discussion in III.F.14(e)(9)). In addition, this stream is partially derived from the Delaware facility's non-exempt vanadium waste. These ferric chloride solids are not exempt. They make up approximately 10% of the commingled ''Iron Rich''.

The Delaware facility also uses scrubbers at various points in its process. Some solids make their way into scrubber waters. When the facility treats these wastewaters, the solids precipitate and the resultant wastewater treatment solids are added to the two wastes described above to form ''Iron Rich''. Solids from the scrubber used to treat gasses from the titanium tetrachloride reactor are Bevill-exempt. Solids from scrubbers associated with oxidation and finishing (steps that take place after the formation of titanium tetrachloride) are not exempt. Based on facility data, we estimate that approximately 1.5% of the total volume of ''Iron Rich'' consists of non-exempt solids from wastewater treatment.

The Tennessee facility generates solids from ferric chloride filtration and from wastewater treatment. The filter solids are exempt (261.4(b)(7)(ii)(S)) because such filtration simply removes exempt solids. Unlike the processing that occurs at the Delaware plant, no chemical manufacturing is taking place at this step at the Tennessee plant. The facility landfills these ferric chloride solids as a discrete wastestream; we do not assess this exempt waste further in this rule. This facility commingles wastewaters from both the titanium tetrachloride and titanium dioxide sides of the process, and the resultant wastewater treatment sludge is thus comprised of exempt and non-exempt sources. The Tennessee facility reported estimated percent solids data for most of their wastewaters. We reviewed these data and determined that a significant portion (74%) of the resultant sludge would be nonexempt (see Titanium Dioxide Listing Background Document for calculations). These nonexempt solids are within the scope of today's proposal. We sampled the commingled exempt and nonexempt waste and describe our assessment of this material in this section.

The Mississippi facility also generates exempt solids from filtering ferric chloride prior to deep well injection. No chemical manufacturing occurs. These solids are placed in a dedicated on-site landfill, and are not assessed further in this rule. The facility also operates a wastewater treatment system which is similar to the Tennessee facility in that it commingles wastewaters from condensation and purification (associated with the titanium tetrachloride production process), as well as oxidation and finishing

(associated with the titanium dioxide production process). The commingled wastewaters are managed in on-site surface impoundments and the dredged solids from these units (comprised of exempt and nonexempt materials) are placed in an on-site landfill. The facility provided detailed information regarding the amounts of solids present in each of the wastewaters managed in this system, demonstrating that there is a small contribution (~3%) of non-exempt solids (*i.e.*, solids in wastewaters from oxidation and finishing) in the wastewater treatment sludge. We did not select this facility for site visits and thus did not sample this waste. We believe our sampling and modeling of the Tennessee and Delaware sites is an appropriate surrogate for this waste given the similar nature of the processes at the three facilities (with particular similarities between the wastewater treatment facilities at Mississippi and Tennessee). Furthermore, the percentages of non-exempt solids in the commingled wastes at the Tennessee and Delaware sites are higher than at the Mississippi site.

What Management Scenarios Were Assessed?

The Delaware facility asserts that there are a variety of end uses for the Iron Rich. The predominant recent use has been for the construction of dikes to contain dredged river sediments at U.S. Army Corp of Engineer disposal sites in the vicinity of the titanium dioxide plant. We assessed this scenario as comparable to an industrial D landfill scenario. The Iron Rich has also been used as daily cover at a municipal landfill (demonstration project) and as final cover for a closed on-site landfill. These uses clearly constitute disposal. Other proposed uses include use as subsidence fill at a closed municipal landfill, structural fill by the local Port Authority, surcharge for road bed compaction, and construction of a wildlife refuge at the site of the closed on-site industrial landfill. These uses all involve placement on the ground and also appear to also be uses that constitute disposal (see 40 CFR 266.20). We chose to model risks for disposal in an off-site industrial D landfill because this seemed to fit the largest number of the varied potential disposal or land-based use scenarios. We believe the municipal landfill scenario is also relevant. Our assessment addresses the municipal scenario qualitatively. These scenarios were assessed for potential releases to drinking water wells and air releases. In addition, we modeled the on-site landfill at the Tennessee facility for potential releases to surface water.

How Was This Waste Category Characterized?

We collected samples of this waste at the Tennessee and Delaware facilities. For the Tennessee facility, we collected the sample directly from a holding/dewatering pond where the dredged wastewater treatment solids are dewatered prior to landfilling on site. We collected the sample from the Delaware facility directly from the Iron Rich dewatering unit press; this sample consisted of commingled chlorinator solids, ferric chloride solids, and wastewater treatment solids. This material is sometimes mixed with fly ash prior to use; our sample was collected prior to fly ash addition. Both samples were analyzed for total, TCLP and SPLP constituent analyses. These data are summarized below in Table III–54 for the constituents of concern that were present in the wastes at levels exceeding the health-based levels and/or ambient water quality criteria.

TABLE III–54.—CHARACTERIZATION OF WASTEWATER TREATMENT SOLIDS FROM THE CHLORIDE-ILMENITE PROCESS, TITANIUM DIOXIDE

Constituent of concern	Detected levels, Delaware site			Detected levels, Tennessee site		HBL (mg/L)	AWQC (mg/L)		Soil screening levels (mg/kg)[1]
	Total (mg/kg)	TCLP (mg/L)	SPLP (mg/L)	Total (mg/kg)	SPLP (mg/L)		Human health	Aquatic life	
Antimony	0.9	[2] 0.021	0.02	0.7	0.021	0.006	0.014	n/a	32
Arsenic	2.2	<0.0035	[2] 0.001	2.8	[3] <0.0035	0.0007	1.8E–05	0.15	4.7
Barium	178	[2] 2.4	0.92	49.6	0.12	1.1	n/a	n/a	5600
Boron	30	1.7	0.61	24.5	0.45	1.4	n/a	n/a	7,200
Lead	309	[2] 0.032	[2] 0.0032	42.4	[2] 0.002	0.015	.....	0.0025	400
Manganese	10,600	252	16.3	2,890	1.5	0.7	0.05	n/a	[4] 3,800
Nickel	91.8	0.5	<0.005	59.8	0.007	0.31	0.61	0.052	1,600
Thallium	3.7	0.28	0.012	7.2	<0.0022	0.001	0.0017	n/a	6.4
Vanadium	240	[2] 0.0003	<0.005	1,060	<0.005	0.14	n/a	n/a	720

n/a: not applicable.
[1] Soil ingestion health-based levels.
[2] Results are less than the typical laboratory reporting limit, but are greater than the calculated instrument detection limits.
[3] One half the detection limit was used as model input.
[4] The air characteristic level is 3,000 mg/kg at 25m and drops to 30,000 at 150m.

In addition, our analytical data show that chlorinated dioxins and furans are present in these wastes. As discussed previously, we believe these compounds are associated with the exempt solids. However, the Delaware waste contains the ferric chloride solids; these solids have lost their exempt status because of the facility's chemical manufacturing/ancillary activities necessary for the production of ferric chloride for sale as a water and wastewater treatment reagent. As a result, we have considered the chlorinated dioxin and furan content of the waste as part of today's listing determination. The PCDD/PCDF analytical results for the Delaware site are summarized below (detected homologs only) in Table III–55.

TABLE III–55.—CHARACTERIZATION OF WASTEWATER TREATMENT SOLIDS FROM THE CHLORIDE-ILMENITE PROCESS, TITANIUM DIOXIDE CHLORINATED DIBENZO-P-DIOXINS (CDD) AND FURANS (CDF)

Constituent of concern	Total Detected levels in Delaware waste (ng/kg, wet basis)
2378-TetraCDF	12.2
12378-PentaCDF	21.8
23478-PentaCDF	48.1
123478-HexaCDF	237
123678-HexaCDF	8.1
234678-HexaCDF	2.5
123789-HexaCDF	5.6
1234678-HeptaCDF	189
1234789-HeptaCDF	126
OctaCDF	24,000
OctaCDD	22.2
2378–TetraCDD Equivalent[1]	57.2

[1] 12378–TetraCDD equivalent calculated using the World Health Organization Toxic Equivalency Factors (WHO–TEF). Van den Berg, et al. 1998. Toxic Equivalency Factors (TEFs) for PCBs, PCDDs, PCDFs for Human and Wildlife. Environmental Health Perspectives, v.106, n.12, pp. 775–792. December.

How Was the Groundwater-to-Surface Water Risk Assessment Established?

The Tennessee facility is bounded to the west by the Tennessee River. The facility indicated that the overall groundwater flow is toward the river. There have been several projects to determine placement of down gradient monitoring wells for individual on-site landfill units. These borings indicate that the groundwater elevation declines to the northwest towards the river. In addition, a contract geologist familiar with the local hydrogeology has indicated that shallow groundwater flow will generally follow the natural topography. A ridgeline running north and south is located just east of the facility boundary. This ridge is approximately 200 feet higher in elevation than the elevation at the facility. Based on this topography, we expect that the groundwater flow direction is to the west towards the river. We calculated the concentrations in the river that would result from discharge of contaminated ground water by estimating the infiltration rate for the unlined landfill, and (given the area of the landfill) diluting the resulting leachate volume into the river under various design flow conditions. The results of this screening level analysis (available in the Risk Assessment Background Document) demonstrate that concentrations of the constituents of concern in the river are likely to be well below the national AWQC for human health and aquatic life for these constituents.

How Was the Groundwater Ingestion Risk Assessment Established?

The Delaware facility reported actual or contemplated use of the Iron Rich at a variety of landfills and land placement usages in the general vicinity of the plant. We used our usual distance-to-well assumptions for an off-site landfill, and assumed hydrogeologic conditions that are representative of the principal soil and aquifer types present regionally (within a 100 mile radius) of the facility. The resultant risk assessment results are presented below in Table III–56.

TABLE III–56.—GROUNDWATER PATHWAY RISK ASSESSMENT RESULTS FOR NON-WASTEWATERS FROM CHLORIDE-ILMENITE PROCESS, TITANIUM DIOXIDE

Constituents of concern	Hazard quotient or cancer risk			
	90th% adult	90th% child	95th% adult	95th% child
Antimony	0.2	0.5	0.4	0.8
Arsenic (cancer risk)	3E–07	2E–07	1E–06	9E–07
Manganese	0.8	1.6	1.6	3.3
Thallium	0.7	1.4	1.1	2.4

What Is EPA's Listing Rationale for This Waste?

We propose to list as hazardous the non-exempt portion of the solid wastes generated from the production of titanium dioxide via the chloride-ilmenite process. This listing covers the non-exempt portions of the wastewater treatment solids generated at all three facilities, any non-exempt portions of the chlorinator solids (*e.g.,* any mass derived from the vanadium wastes), and ferric chloride solids generated at the Delaware facility. To the extent that these listed materials remain commingled with solids that would otherwise be exempt, the entire commingled mass is subject to the listing (see § 261.3(b)(2)). Our risk results indicate that metals in these materials leach at levels that may pose a risk to human health and the environment. Specifically, in the commingled wastes, the risks exceed an HQ of one for both manganese (3.3) and thallium (2.4) at the 95th percentile; the risks similarly exceed an HQ of one for both manganese (1.6) and thallium (1.4) at the 90th percentile.

In addition, the management practices reported for this waste, particularly as reported for the Delaware site, are expected to provide less control than the scenario modeled (*i.e.,* an industrial landfill). Potential future management practices include use at municipal landfills for interim and final cover, as well as subsidence fill at a closed municipal landfill. These scenarios, particularly the interim cover scenario, indicate that the waste may come in contact with municipal landfill leachate in the future, if not listed. The TCLP results for this waste indicate even

higher mobility of metals than those modeled for the industrial landfill scenario using the SPLP. The TCLP concentrations of manganese and thallium exceed the SPLP levels by factors of 15-fold and 23-fold, respectively. We expect, therefore, that HQs resulting from disposal in a landfill with municipal waste would likely be higher by an order of magnitude than the industrial landfill scenario we modeled.

The modeling presented above uses the entire waste volume reported for the Delaware facility's Iron Rich. We used this volume because it corresponds to the sample that we collected of this material, and there is considerable uncertainty on the portion of the waste that would be Bevill exempt. (This uncertainty is related to the estimated nature of the solids contributions provided by the facilities and the variability reported between the facilities.) We conducted a supplemental analysis to determine how sensitive our modeling results are to changes in volume, in recognition that we are only proposing at this time to list approximately 10% of the current Iron Rich volume (the balance of the Delaware site's waste being exempt and outside the scope of today's listing determination). These results, presented below in Table III–57, show that the risks are somewhat sensitive to the volume modeled, but the risks are not reduced below EPA's HQ threshold of one for noncarcinogens. In other words, if the facility were to segregate all exempt solids from the materials being proposed for listing prior to disposal, the remaining volume could still pose risk to human health and the environment. Further, as noted above, based on the TCLP results, the manganese and thallium HQs would be an order of magnitude higher in a municipal landfill scenario.

TABLE III–57.—REDUCED VOLUME ANALYSIS; GROUNDWATER PATHWAY RISK ASSESSMENT RESULTS FOR NON-WASTEWATERS FROM CHLORIDE-ILMENITE PROCESS, TITANIUM DIOXIDE

Constituents of concern	Hazard quotient or cancer risk			
	90th % adult	90th % child	95th % adult	95th % child
Antimony	0.1	0.2	0.2	0.4
Arsenic	not modeled			
Manganese	0.5	1.0	1.0	2.2
Thallium	0.4	0.9	0.8	1.6

This waste also contains 57 ppt TCDD equivalents. This concentration exceeds the background level in soils (8 ppt) and the soil ingestion HBL of 45 ppt[59]. We were not able to compare this concentration with a screening level from the Air Characteristics Study because the study did not establish levels for TCDD. While we did not conduct a risk assessment of the detected TCDD TEQ, the presence of TCDD equivalents in the wastes is an additional factor that supports a listing determination, particularly in light of the fact that the management practices reported by the facility were varied and, in many cases, would constitute releases to the circulating environment with a greater potential for a variety of exposure pathways than would occur from a well managed landfill.

The proposed listing address all non-wastewaters that are not covered by the mineral processing waste exemption, and is not limited to non-exempt wastewater treatment solids. The listing therefore would cover non-exempt non-wastewaters from the removal of vanadium wastes from the product titanium tetrachloride stream that are currently returned to the reaction area and ultimately commingled with the exempt reactor solids or ferric chloride (these solids were part of the Iron Rich sample collected by EPA to support this listing determination). Similarly, at the Delaware facility, solids that collect in the ferric chloride product storage tanks and impoundments would be covered by the listing as these solids are ineligible for the mineral processing exemption (because they are generated after the initiation of chemical manufacturing and/or ancillary operations), they are comparable to the ferric chloride solids that are commingled in the Iron Rich, and they are derived to some degree from non-exempt vanadium materials. The proposed listing, therefore, reads:

K178 Non-wastewaters from the production of titanium dioxide by the chloride-ilmenite process. (T) [This listing does not apply to chloride process waste solids from titanium tetrachloride production exempt under section 261.4(b)(7)]

We are also proposing to add manganese and thallium to Appendix VII to Part 261, which designates the hazardous constituents for which K178 would be listed. In addition, we are proposing to add manganese to the list of hazardous constituents in Appendix VIII to Part 261. We believe the available studies clearly show that manganese has toxic effects on humans and other life forms.[60]

(11) HCl from reaction scrubber, chloride-ilmenite process. All three chloride-ilmenite facilities reported generating HCl from scrubbing reactor off-gasses. These wastes are stored in covered tanks with vent scrubbers and are re-used on site, predominantly as pH control in wastewater treatment systems. We assessed this waste as part of the following category, ''Commingled wastewaters from chloride-ilmenite process''.

(12) Commingled wastewaters from the chloride-ilmenite process.

How Many Facilities Generate This Waste Category and How Is It Managed?

All three chloride-ilmenite facilities commingle their wastewaters and treat them on-site. The Delaware facility utilizes a tank-based system, with final NPDES discharge through an unlined cooling pond to the adjacent river. Both the Tennessee and Mississippi facilities utilized surface impoundment based wastewater treatment systems. These wastewaters are not Bevill-exempt (but convey exempt solids into the wastewater treatment system where those solids are removed to form sludges that are comprised of exempt solids and non-exempt solids, depending on the specific piping of the plants).

[59] EPA is currently evaluating the health risks from 2,3,7,8-TCDD and once the review process is completed, EPA may re-examine the soil ingestion HBL. See *http://www.epa.gov.ncea.dioxin.htm* for additional information.

[60] See information in EPA's IRIS database, which may be found at *http://www.epa.gov/iris,* and ''Risk Assessment Support to the Listing Determinations for the Inorganic Chemical Manufacturing Wastes'' (August 2000) in the docket for today's rule.

What Management Scenarios Were Assessed?

We modeled the surface impoundment scenarios at both the Tennessee and Mississippi sites. (We assumed any releases from the unlined cooling pond at the Delaware facility would be intercepted by the river, and would be comparable in concentration, but much less volume than the actual NPDES discharge point.)

At the Tennessee site, we assessed the potential releases from the impoundment system to the adjacent river. We do not believe any drinking water wells could possibly be impacted by these impoundments given their placement on the river banks and within the facility property. We sampled at this facility at the headworks to the impoundment train.

We assessed the Mississippi facility's impact on both surface water and potential drinking water wells. The RFI[61] for this site indicates that the local groundwater flow is generally toward the south and east. It is unclear what the patterns are off site and how these patterns might change seasonally, but the groundwater elevation maps included in the RFI indicated that the direction of groundwater flow does vary seasonally and that a shift to a more westerly direction may occur under some conditions. Information from the U.S. Geological Survey's Ground-water Site Inventory, available in the docket for today's proposal, shows numerous drinking water wells in the vicinity of the plant, both to the east and southwest. The facility also reported wells on their property which they believe are cross-gradient and, in some cases, unused. We chose to model the groundwater scenario because of potential impacts on these known wells. We also assessed the potential impact of the Mississippi facility's surface impoundments on surface water because the facility is bounded to the south by the Bay of St. Louis.

We did not conduct sampling and analysis at the Mississippi facility. Our risk assessment inputs for this facility used the combined analytical data set for the Delaware and Tennessee facilities, which are sister plants of the Mississippi plant. We used the physical parameters for the Mississippi site to describe wastewater flows, surface impoundment sizes, and distances to potential receptors for this modeling.

How Was This Waste Category Characterized?

The analytical results for the constituents found to be present in the wastewaters at levels exceeding HBLs and/or AWQC are presented below in Table III–58.

TABLE III–58.—CHARACTERIZATION OF COMMINGLED WASTEWATERS FROM CHLORIDE-ILMENITE PROCESS, TITANIUM DIOXIDE

Constituent of concern	Detected levels in Delaware sample (mg/L)	Detected levels in Tennessee sample (mg/L)	HBL (mg/L)	AWQC—Aquatic life (mg/L)
Aluminum	0.65	3.1	16	0.087
Copper	0.03	0.007	1.3	0.0031
Lead	<0.003	0.005B	0.015	0.0025
Manganese	3.3	3.34	0.73	N/A
Nickel	0.013	0.020	0.3	0.052
Thallium	<0.005	0.013	0.001	N/A
Vanadium	0.018	0.63	0.14	N/A

B: also detected in blank
N/A: not available

How Was the Groundwater-to-Surface Water Risk Assessment Established?

The Tennessee facility is bounded to the west by a river. As noted above, the facility indicated that the overall groundwater flow is toward the river. The Mississippi facility is bounded to the south by the Bay of St. Louis, which is fed by 2 rivers to the east and west of the plant. Additional details are available in the docket. We calculated the concentration in the river that would result from discharge of contaminated groundwater by estimating the infiltration rate for the unlined surface impoundment, and (given the area of the impoundment) diluting the resulting leachate volume into the river under various design flow conditions. The results of this screening level analysis (available in Risk Assessment Support to the Inorganic Chemical Industry Listing: Background Information Document'') demonstrate that concentrations of the constituents of concern in the river are likely to be well below the human health and aquatic life AWQC for these constituents.

How Was the Groundwater Ingestion Risk Assessment Established?

Based on information presented in the RFI for the Mississippi facility, as well as from the U.S. Geological Survey Ground-water Site Inventory, there are groundwater wells to the east and southwest of the plant within 2,000–5,000 feet. We modeled the potential impact of the unlined surface impoundment train on drinking water wells located within this range. The results are presented below in Table III–59.

[61] Draft RCRA Facility Investigation Report; DuPont DeLisle, NS. December 7, 1999.

TABLE III–59.—GROUNDWATER PATHWAY RISK ASSESSMENT RESULTS FOR COMMINGLED WASTEWATERS FROM CHLORIDE-ILMENITE PROCESS, TITANIUM DIOXIDE

Constituent of concern	Hazard quotient			
	90th % adult	90th % child	95th % adult	95th % child
Manganese	0.0002	0.0003	0.0003	0.0007
Thallium	0.002	0.004	0.004	0.009
Vanadium	0.00009	0.0002	0.0003	0.0006

What Is EPA's Listing Rationale for This Waste?

We propose not to list commingled wastewaters from the production of titanium dioxide via the chloride-ilmenite process. The results of our risk assessment demonstrate that this waste category poses no risks that warrant listing as hazardous waste. The concentrations of the constituents of concern at the modeled exposure points are well below an HQ of one.

(13) Additive vent filter solids from the chloride-ilmenite process. One facility reported production of vent filter solids from additive handling. This material is placed in an off-site industrial D landfill. Small amounts of this waste are generated (<1 MT). This material is not Bevill exempt. Handling of this additive is an ancillary activity. All wastes from ancillary activities are not uniquely associated with extraction/beneficiation and processing of ores and minerals (see 45 FR 76619, November 19, 1980, and 63 FR 28590, May 26, 1998).

Information from the facility indicates that a constituent of concern in this material is aluminum. The drinking water HBL for aluminum is higher than the solubility limit in ground water and, therefore, contamination of ground water is not likely to pose a significant risk to human health. Based on this fact, and the very small volume generated by one facility, we propose not to list this material as a hazardous waste.

(14) Vanadium waste from the chloride-ilmenite and chloride process. Vanadium containing material is generated from the production of titanium dioxide via the chloride and the chloride-ilmenite processes. This is not an exempt mineral processing waste because it is not a solid (see also 63 FR 28602). This waste is generally returned to the reaction area where titanium tetrachloride is recovered and the remainder of the vanadium waste is incorporated into the mass of the unreacted coke and ore solids (i.e., the exempt solids) and/or the waste acid. There is no potential for exposure prior to mixing with the exempt waste or waste acid. We assessed the mixtures of exempt and non-exempt wastes as discussed above in III.D.14.e(8) and (10). Specifically, we assessed the wastewater treatment solids at the Maryland facility, the Iron Rich material at the Delaware facility, and the waste acid.

(15) Off-specification titanium dioxide product.

How Many Facilities Generate This Waste Category and How is it Managed?

Two facilities reported generating this waste, although we believe that all titanium dioxide manufacturers may generate this waste at some time. The two reporting facilities both describe off-site Subtitle D landfills that accept both municipal and industrial wastes as the final management practice for this waste. As noted in the September 1, 1989 Bevill rulemaking, off-specification commercial product wastes are non-exempt solid wastes.

What Management Scenarios Were Assessed?

We modeled the off-site municipal D landfill scenario using the regional locations of the reported landfills.

How Was This Waste Category Characterized?

We collected one sample of this waste and conducted totals, TCLP, and SPLP analyses. The analytical results for the one constituent found to be present in the waste TCLP sample at a level exceeding its HBL are presented below in Table III–60 (no constituent exceeded HBLs in the SPLP).

TABLE III–60.—CHARACTERIZATION OF OFF-SPECIFICATION TITANIUM DIOXIDE PRODUCT

Constituent of concern	Detected levels in sample DPN–SO–02 (mg/L)		HBL (mg/L)
	Total	TCLP	
Lead	0.6	[1] 0.06	0.015

[1] Results are less than the typical laboratory reporting limit, but are greater than the calculated instrument detection limits.

How Was the Groundwater Ingestion Risk Assessment Established?

The facilities reported use of landfills in the vicinity of their plant. We used our usual distance-to-well assumptions for an off-site landfill, and assumed hydrogeologic conditions that are representative of the principal soil and aquifer types present regionally (within a 100 mile radius) for the particular landfill sites that were reported for these wastes. The resultant groundwater concentrations were very low and are presented below in Table III–61.

TABLE III–61.—GROUNDWATER PATHWAY RISK ASSESSMENT RESULTS FOR OFF-SPECIFICATION TITANIUM DIOXIDE

Constituent of concern	Predicted well concentrations (mg/L)		HBL (mg/L)
	90th%	95th%	
Lead	2.5E–08	1.1E–06	0.015

The modeled levels of lead were so far below the HBL that we determined it was unnecessary to further assess the risks from lead. Clearly those risks would be well below an HQ of one.

What Is EPA's Listing Rationale for This Waste?

We propose not to list off-specification titanium dioxide as a hazardous waste. Our risk analysis shows that this waste does not pose risks that warrant listing.

(16) Railcar/trailer product washout. One facility reported generation of this residual (<10,000 MT). The washwater, containing titanium dioxide, is placed in a surface impoundment. This waste is not Bevill exempt because it is a liquid and it is associated with the chemical manufacturing part of the process. The water from this pond is subsequently sent to wastewater treatment where it is commingled with all other chloride-ilmenite wastewaters (assessed in III.D.14.e(12)). The titanium dioxide product that settles to the bottom of this pond is mechanically recovered and returned to the production process. We assessed the potential impact of this impoundment via the SPLP analytical data collected for off-specification product (previously discussed in III.D.14.e(15)). These data are available in the background document for this sector, and show no constituents of concern. We chose the SPLP to assess this management scenario because there is no potential for contact with municipal landfill leachate. We therefore do not propose to list this waste.

G. What Is the Status of Landfill Leachate From Previously Disposed Wastes?

Leachate derived from the treatment, storage, or disposal of listed hazardous wastes is classified as a hazardous waste by virtue of the ''derived-from'' rule in 40 CFR 261.3(c)(2). The Agency has been clear in the past that hazardous waste listings apply to wastes disposed of prior to the effective date of a listing, even if the landfill ceases disposal of the waste when the waste becomes hazardous. (See 53 FR 31147, August 17, 1988). We also have a well-established interpretation that listings apply to leachate derived from the disposal of listed hazardous wastes, including leachate derived from wastes meeting the listing description that were disposed before the effective date of a listing. We are not reopening any of these issues with this proposed rulemaking.

Of course, as set out in detail in the August 1988 notice, this does not mean that landfills holding wastes that are listed now as hazardous become subject to Subtitle C regulation. However, previously disposed wastes now meeting a listing description, including residues such as leachate that are derived from such wastes, and that are managed actively do become subject to Subtitle C regulation. See 53 FR at 31149, August 17, 1988. In many, indeed most, circumstances, active management of leachate would be exempt from Subtitle C regulation because the usual pattern of management is discharge either to POTWs via the sewer system, where leachate mixes with domestic sewage and is excluded from RCRA jurisdiction (see RCRA Section 1004(27) and 40 CFR 261.4(a)(1)), or to navigable waters, also excluded from RCRA jurisdiction (see RCRA Section 1004(27) and 40 CFR 261.4(a)(2)). In addition, management of leachate in wastewater treatment tanks prior to discharge under the CWA is exempt from RCRA regulation (40 CFR 264.1(g)(6)).

If actively managed, landfill leachate and gas condensate derived from the newly-listed wastes proposed for listing in today's proposal could be classified as K176, K177, or K178. In such circumstances, we would be concerned about the potential disruption in current leachate management that could occur, and the possibility of redundant regulation. This issue was raised to the Agency in the context of the petroleum refinery waste listings (see 63 FR 42173, August 6, 1998). A commenter expressed concern that, because some of the commenter's non-hazardous waste landfills received newly-listed petroleum wastes prior to the effective date of the listing decision, the leachate that is collected and managed from these landfills would be classified as hazardous. The commenter argued that this could lead to vastly increased treatment and disposal costs without necessarily any environmental benefit. After examining and seeking comment on this issue, we published a final rule that temporarily defers regulation of landfill leachate and gas condensate derived from certain listed petroleum refining wastes (K169-K172) that were disposed before, but not after, the new listings became effective, provided certain conditions are met. See 64 FR 6806, February 11, 1999. Since then, we have published proposed rules for wastes from the dye and pigment industries (64 FR 40192, July 23, 1999) and the chlorinated aliphatics industry (64 FR 46476, August 25, 1998) that also propose deferrals for similar wastes derived from landfills.

At the time this issue was brought to the Agency's attention in the context of the petroleum refinery waste listings, EPA's Office of Water had recently proposed national effluent limitations guidelines and pretreatment standards for wastewater discharges—most notably, leachate—from certain types of landfills. See 63 FR 6426, February 6, 1998. In support of this proposal, EPA conducted a study of the volume and chemical composition of wastewaters generated by both subtitle C (hazardous waste) and subtitle D (non-hazardous waste) landfills, including treatment technologies and management practices currently in use. Most pertinent to finalizing the temporary deferral for the petroleum refining wastes, EPA did not propose (or subsequently finalize) pretreatment standards for subtitle D landfill wastewaters sent to POTWs because the Agency's information indicated that such standards were not required (see 65 FR 3008, January 19, 2000).

The conditions included in the temporary deferral we published on February 11, 1999 are that the leachate is subject to regulation under the Clean Water Act, and the leachate cannot be stored in surface impoundments after February 13, 2001. See 40 CFR 261.4(b)(15). We believe that it was appropriate to temporarily defer the application of the new waste codes to such leachate in order to avoid disruption of ongoing leachate management activities while the Agency decides if any further integration is needed of the RCRA and CWA regulations consistent with RCRA Section 1006(b)(1). We believe that it is still appropriate to defer regulation and avoid leachate management activities, and to permit the Agency to decide whether any further integration of the two programs is needed. As such, we would be concerned about forcing pretreatment of leachate even though pretreatment is neither required by the CWA, nor needed. Therefore, we are proposing to temporarily defer the regulation of landfill leachate and gas condensate derived from the wastes we are proposing for listing in today's rule, with the same conditions as described in 40 CFR 261.4(b)(15) for petroleum wastes. We seek comment on our proposed decision to extend the temporary deferral to include the wastes proposed for listing in today's notice.

IV. Proposed Treatment Standards Under RCRA's Land Disposal Restrictions

A. What Are EPA's Land Disposal Restrictions (LDRs)?

RCRA requires us to establish treatment standards for all wastes destined for the land disposal. These are the ''land disposal restrictions'' or LDRs. For any hazardous waste identified or listed after November 8, 1984, we must promulgate these LDR treatment standards within six months of the date of identification or final listing (RCRA Section 3004(g)(4), 42 U.S.C. 6924(g)(4)). RCRA also requires us to set as these treatment standards ''* * * levels or methods of treatment, if any, which substantially diminish the toxicity of the waste or substantially reduce the likelihood of migration of hazardous constituents from the waste so that short-term and long-term threats to human health and the environment are minimized.'' (RCRA Section 3004(m)(1), 42 U.S.C. 6924(m)(1)).

Once a hazardous waste is prohibited from land disposal, the statute provides only two options for legal land disposal: Meet the treatment standard for the waste prior to land disposal, or dispose of the waste in a land disposal unit that satisfies the statutory no migration test. A no migration unit is one from which there will be no migration of hazardous constituents for as long as the waste remains hazardous. RCRA sections 3004 (d), (e), (f), and (g)(5). Each waste identified for listing as hazardous in this rule will be subject to all the land disposal restrictions on the same day their respective listing becomes effective.

We gathered data on waste characteristics and current management practices for wastes proposed to be listed in this action. These data can be found in the administrative record for this rule. An examination of the constituents that are the basis of the proposed listings shows that we have previously developed numerical treatment standards for most of the constituents. We have determined that it is technically feasible and justified to apply existing universal treatment standards (UTS) to the hazardous constituents in the wastes proposed to be listed as K176, K177, and K178 that were found to be present at concentrations exceeding the treatment standards, because the waste compositions are similar to other wastes for which applicable treatment technologies have been demonstrated. Also see LDR Phase II final rule, 59 FR 47982, September 19, 1994, for a further discussion of UTS. A list of the proposed regulated hazardous constituents and the proposed treatment limits can be found in the following preamble sections and in the proposed regulatory Table 268.40—Treatment Standards for Hazardous Wastes. If we make a final decision to list the identified wastes, these constituents and treatment standards would apply.

We have provided in the BDAT background document a review of technologies that can be used to meet the proposed numerical concentration limits for K176, K177, and K178, assuming optimized design and operation. Where we are proposing numerical concentration limits, the use of other technologies capable of achieving the proposed treatment standards would be allowed, except for those treatment or reclamation practices constituting land disposal or impermissible dilution (see 40 CFR 268.3).

B. What Are the Treatment Standards for K176 (Baghouse Filters From Production of Antimony Oxide)?

The constituents identified to require treatment in this waste are antimony, arsenic, cadmium, lead, and mercury. We are proposing to apply the UTS levels to these constituents as the treatment standards. Therefore, the nonwastewaters treatment standard proposed for antimony is 1.15mg/L TCLP; arsenic is 5.0 mg/L TCLP; cadmium is 0.11 mg/L TCLP; lead is 0.75 mg/L TCLP; and, mercury is 0.025 mg/L TCLP. In the event that there are wastewater treatment residuals from treatment of K176 (which under the derived-from rule would also be considered as K176), the wastewater treatment standards are as follows: Antimony is 1.9 mg/L; arsenic is 1.4 mg/L; cadmium is 0.69 mg/L; lead is 0.69 mg/L; and, mercury is 0.15 mg/L.

We are requesting data and comment on the stabilization of antimony. Available stabilization data for antimony show effective treatment for wastes with initial antimony concentrations below those found in K176. Therefore, based on the available data, we are uncertain if stabilization will be effective for the antimony in this waste.

C. What Standards Are the Treatment Standards for K177 (Slag From the Production of Antimony Oxide That is Disposed of or Speculatively Accumulated)?

The constituents identified to require treatment in this waste are antimony, arsenic, and lead. We are proposing to apply the UTS levels to these constituents as the treatment standards. Therefore, the nonwastewater treatment standard for antimony is 1.15 mg/L TCLP, for arsenic is 5.0 mg/L TCLP, and for lead is 0.75 mg/L TCLP. In the event that there are wastewater treatment residuals from treatment of K177 (which under the derived-from rule also would be considered K177), the wastewater treatment standard for antimony is 1.9 mg/L, for arsenic is 1.4 mg/L, and for lead is 0.69 mg/L.

We are requesting data and comment on the stabilization of antimony. Available stabilization data for antimony show effective treatment for wastes with initial antimony concentrations below those found in K177. Therefore, based on the available data, we are uncertain if stabilization will be effective for the antimony in this waste.

D. What Are the Treatment Standards for K178 (Nonwastewaters From the Production of Titanium Dioxide by the Chloride-Ilmenite Process)?

The constituents of concern in this waste are the chlorinated congeners of dibenzo-p-dioxin and dibenzofuran, thallium and manganese. We are proposing to apply the UTS levels to the chlorinated congeners of dibenzo-p-dioxin and dibenzofuran, and thallium, as indicated in Table V–1. In addition we are also proposing the option of complying with the technology standard of combustion (CMBST) for the chlorinated dibenzo-p-dioxin and dibenzofuran (dioxins and furans) constituents present in K178.

We note at the outset that we typically promulgate numerical performance standards to allow facilities maximum flexibility in determining for themselves how best to achieve compliance with the LDR treatment standards. By promulgating combustion as an alternative compliance option, we are not disturbing the degree of flexibility afforded to facilities; rather, we are enhancing it.

However, when we specify a treatment technology like CMBST as the treatment standard, the analytical elements of compliance change. Typically, with specified technologies, no testing and analysis of treatment residuals is required because we are confident that use of the specified technology will reduce the level of target organic constituents to levels that minimize threats to human health and the environment. For K178, the regulated organic constituents of concern are dioxin/furan congeners. If combustion in well designed and operated units is used to treat K178, the dioxin/furan congeners in the K178 should be substantially destroyed. By

prescribing CMBST, we ensure that the units treating K178 will be units subject to the standards in Part 264 Subpart O or Part 266 Subpart H, or from interim status incinerators which have made a specific demonstration that they operate in a manner equivalent to a Part 264 or Part 266 combustion unit. The practical effect of this change will be to limit the type of facilities that can combust K178 to well-regulated RCRA units (or, after the current transition period, Clean Air Act permitted units subject to MACT standards). This will ensure that combustion is done in a closely-regulated facility and in a manner that provides protection for human health and the environment. Furthermore, by restricting combustion of K178 to these units, combustion will only occur in units subject to the recently upgraded dioxin/furan emission standards of the MACT Hazardous Waste Combustion Rule as well as standards for other hazardous air pollutants, such as metals (64 FR 52828, September 30, 1999).

K178 does have metal constituents of concern, which would not be treated by the combustion process and that would remain in the combustion treatment residuals (*e.g.,* ash and scrubber water). We therefore are retaining metal treatment standards for all circumstances, i.e., whether or not the treatment used by a facility involves combustion. When combustion is used to treat the organics to achieve LDR compliance, facilities will still need to conduct compliance testing and analysis for all regulated metal constituents in the combustion treatment residuals prior to disposal. This approach is patterned after EPA's promulgation of a similar alternative treatment standard for F024 (wastes from production of chlorinated aliphatics) and also for F032 (wastes from wood preserving processes). See 55 FR 22580–81, June 1, 1990. See also 62 FR 26000–3, May 12, 1997.

For both solid and wastewater treatment residuals, we are proposing use of the Universal Treatment Standards (UTS) for all constituents of concern except manganese. Universal treatment standards have not been developed for manganese, although we are proposing standards below. We did not study this constituent in the development of F039 treatment standards in 1990 or UTS in 1994. Furthermore, we lack studies demonstrating treatment effectiveness for highly concentrated manganese nonwastewaters, such as those containing manganese at levels such as those found in K178. We did, however, identify treatability data for less concentrated manganese waste in our treatability database.

These data show that solidification offers promising results in reducing the mobility of manganese, at least in less concentrated manganese waste. Such treatment yielded concentrations of 0.002, 0.003, and 0.46 mg/L TCLP. Under the LDR program, we typically apply a variability factor of 2.8 to the treated waste data, to account for variations arising from mechanical limitations in the treatment equipment. Therefore we calculated potential treatment standards based on solidification treatment from our treatability database as 0.006, 0.008, and 1.29 mg/L TCLP. We are unsure whether these treatment standards would be achievable in a waste with the significantly higher concentrations of manganese found in K178. Therefore, we are not proposing treatment standards based on solidification. Rather, to propose a more achievable standard, we based it on a technology which results in higher post-treatment manganese levels. High temperature metals recovery (which vitrifies the manganese in the slag) resulted in a treated manganese concentration of 1.3 mg/L TCLP. Using this datum and our typical variability factor of 2.8, we calculated a proposed manganese treatment standard of 3.6 mg/L TCLP. We request comment and data on this proposed treatment standard, and we request anyone who has an interest in the treatment standard for manganese to comment to that effect. We may use the list of commenters on this topic as the only individuals notified of potential changes to this proposed treatment standard, so it is important for you to comment if you are in any way interested.

Because it is possible that commenters may submit data showing that this treatment option is inappropriate for K178, we request comment on the option of setting a treatment standard for manganese that is identical to the current UTS level for thallium, the other metal found in proposed K178. The thallium treatment level of 0.20 mg/L TCLP is based on stabilization. We also request any information regarding the similarity of manganese nonwastewater treatment to the treatment of other RCRA-regulated metals that now appear in the UTS, both from a structural or physico-chemical perspective as well as from a treatment performance perspective.

We have some treatment data for manganese in wastewater matrices derived from wastes other than K178 in our treatability database. It has been difficult to determine whether these treatment data are relevant because we have no examples of wastewaters derived from K178. We are therefore unsure if the wastes in our database are more or less concentrated than actual K178 wastewaters. To account for this uncertainty, we selected treatment data representing relatively high initial concentrations (up to 1000 mg/L), but also representing full scale operation and satisfactory treatment (at least 90 percent reduction in concentration). We found that sedimentation technology, the most effective treatment method in our database, resulted in a final effluent concentration of 6.1 mg/L and chemical precipitation technology resulted in final effluent concentrations of 2.4 and 4.8 mg/L (both operated at full scale and resulted in greater than 90 percent reduction). We have selected, to be conservative, the highest concentration (6.1 mg/L) to calculate a K178 wastewater standard. We applied a variability factor of 2.8 to obtain a proposed K178 LDR treatment standard of 17.1mg/L. Again, we request comments on and data relevant to this proposed treatment standard for wastewater forms of K178, both from those who support the standard and those who believe the standard is not achievable. We also request any information regarding the similarity of manganese wastewater treatment to the treatment of other RCRA-regulated metals that now appear in the UTS, both from a structural or physico-chemical perspective as well as from a treatment performance perspective. Only commenters on this subject may be notified of future changes we may make based on newly submitted data.

Because we typically include the same treatment standards for new listings into those for F039 (multisource leachate) to maintain equivalence within the LDR regulatory structure, we are also proposing to add the manganese treatment standard to the F039 section of the 268.40 table. The F039 waste code applies to hazardous waste landfill leachates in lieu of the original waste codes when multiple waste codes would otherwise apply. F039 wastes are subject to numerical treatment standards equivalent to UTS. We are proposing this addition to the constituents regulated by F039 to maintain the implementation benefits of having one waste code for multisource leachate. We are also proposing to add manganese to the UTS Table at 40 CFR 268.48. Manganese represents significant risk to human health and the environment, as shown in the risk assessment accompanying this rule. Its presence in other hazardous wastes

should be mitigated by effective treatment to avoid similar risks after land disposal. Furthermore, when manganese is added to the UTS list, all characteristic wastes that have this constituent as an underlying hazardous constituent above the UTS levels will require treatment of manganese before land disposal. We solicit comments on these proposed conforming changes and especially on the impacts that they may have on other wastes beyond just K178.

We request comment on the full set of proposed standards for K178 listed in the following table.

TABLE IV–1.—TREATMENT STANDARDS FOR K178

Regulated hazardous constituent		Wastewaters	Nonwastewaters
Common name	CAS[1] No.	Concentration in mg/L[2], or technology code[3]	Concentration in mg/kg[4] unless noted as "mg/L TCLP", or technology code
1,2,3,4,6,7,8-Heptachlorodibenzo-*p*-dioxin	35822–39–4	0.000035 or CMBST[5]	0.0025 or CMBST[5]
1,2,3,4,6,7,8-Heptachlorodibenzofuran	67562–39–4	0.000035 or CMBST[5]	0.0025 or CMBST[5]
1,2,3,4,7,8,9-Heptachlorodibenzofuran	55673–89–7	0.000035 or CMBST[5]	0.0025 or CMBST[5]
HxCDDs (All Hexachlorodibenzo-*p*-dioxins)	34465–46–8	0.000063 or CMBST[5]	0.001 or CMBST[5]
HxCDFs (All Hexachlorodibenzofurans)	55684–94–1	0.000063 or CMBST[5]	0.001 or CMBST[5]
1,2,3,4,6,7,8,9-Octachlorodibenzo-*p*-dioxin (OCDD)	3268–87–9	0.000063 or CMBST[5]	0.005 or CMBST[5]
1,2,3,4,6,7,8,9-Octachlorodibenzofuran (OCDF)	39001–02–0	0.000063 or CMBST[5]	0.005 or CMBST[5]
PeCDDs (All Pentachlorodibenzo-*p*-dioxins)	36088–22–9	0.000063 or CMBST[5]	0.001 or CMBST[5]
PeCDFs (All Pentachlorodibenzofurans)	30402–15–4	0.000035 or CMBST[5]	0.001 or CMBST[5]
TCDDs (All tetrachlorodi-benzo-*p*-dioxins)	41903–57–5	0.000063 or CMBST[5]	0.001 or CMBST[5]
TCDFs (All tetrachlorodibenzofurans)	55722–27–5	0.000063 or CMBST[5]	0.001 or CMBST[5]
Manganese	7439–96–5	17.1	3.6 mg/L TCLP
Thallium	7440–28–0	1.4	0.20 mg/L TCLP

[1] CAS means Chemical Abstract Services. When the waste code and/or regulated constituents are described as a combination of a chemical with its salts and/or esters, the CAS number is given for the parent compound only.

[2] Concentration standards for wastewaters are expressed in mg/L and are based on analysis of composite samples.

[3] All treatment standards expressed as a Technology Code or combination of Technology Codes are explained in detail in 40 CFR 268.42 Table 1-Technology Codes and Descriptions of Technology-Based Standards.

[4] Except for Metals (EP or TCLP) and Cyanides (Total and Amenable) the nonwastewater treatment standards expressed as a concentration were established, in part, based upon incineration in units operated in accordance with the technical requirements of 40 CFR part 264, subpart O or 40 CFR part 265, subpart O, or based upon combustion in fuel substitution units operating in accordance with applicable technical requirements. A facility may comply with these treatment standards according to provisions in 40 CFR 268.40(d). All concentration standards for nonwastewaters are based on analysis of grab samples.

[5] For these wastes, the definition of CMBST is limited to: (1) combustion units operating under 40 CFR 266, (2) combustion units permitted under 40 CFR Part 264, Subpart O, or (3) combustion units operating under 40 CFR 265, Subpart O, which have obtained a determination of equivalent treatment under 268.42(b).

What Other LDR Provisions Are Proposed to Apply?

1. Debris. We propose to apply the regulations at 40 CFR 268.45 to hazardous debris contaminated with K176, K177 or K178. Debris contaminated with these wastes would have to be treated prior to land disposal, using specific technologies from one or more of the following families of debris treatment technologies: extraction, destruction, or immobilization. Hazardous debris contaminated with a listed waste that is treated by an immobilization technology specified in 40 CFR 268.45 Table 1 is a hazardous waste and must be managed in a hazardous waste facility. Residuals generated from the treatment of debris contaminated with K176, K177, or K178 would remain subject to the treatment standards proposed today. See 57 FR 37277, August 18, 1992, for additional information on the applicability, scope, and content of the hazardous debris provisions.

2. Soil. In addition, we propose to apply the regulations at 40 CFR 268.49 to hazardous soil contaminated with K176, K177, or K178. Soil contaminated with these wastes would have to be treated prior to land disposal, meeting either alternative treatment standards (i.e., 10 times UTS or 90 percent reduction in initial constituent concentrations) or the standards at 40 CFR 268.40 being proposed today. Non-soil residuals generated from the treatment of soil contaminated with K176, K177, or K178 would remain subject to the treatment standards proposed today. See 63 FR 28602, May 26, 1998, for additional information on the applicability, scope, and content of the alternative soil treatment standard provisions.

3. Underground Injection Wells that can be found in the administrative record for this rule. Finally, because land disposal also includes placement in injection wells (40 CFR 268.2(c)) application of the land disposal restrictions to K176, K177, and K178 requires the modification of injection well requirements found in 40 CFR 148. We propose that K176, K177, and K178 be prohibited from underground injection. Therefore, these wastes could not be underground injected unless they have been treated in compliance with the LDR treatment standards being proposed today, or if they are disposed in a deep injection well that has been granted a no migration petition for those wastes.

E. Is There Treatment Capacity for the Proposed Wastes?

1. What Is a Capacity Determination?

EPA must determine whether adequate alternative treatment capacity exists nationally to manage the wastes subject to LDR treatment standards. RCRA section 3004 (h)(2). Thus, LDRs are effective when the new listings are effective (typically 6 months after the new listings are published in the **Federal Register**), unless EPA grants a national capacity variance from the otherwise-applicable date and establishes a different date (not to exceed two years beyond the statutory deadline) based on "* * * the earliest date on which adequate alternative treatment, recovery, or disposal capacity which protects human health and the environment will be available" (RCRA section 3004(h)(2), 42 U.S.C.6924(h)(2)).

Our capacity analysis methodology focuses on the amount of waste

currently disposed on the land, which will require alternative or additional treatment as a result of the LDRs. The quantity of wastes that is not disposed on the land, such as discharges regulated under NPDES, discharges to a POTW, or treatment in a RCRA-exempt tank, is not included in the quantities requiring additional treatment as a result of the LDRs. Also, land-disposed wastes that do not require alternative or additional treatment are excluded from the required capacity estimates (i.e., those that currently are treated to meet the LDR treatment standards). Land-disposed wastes requiring alternative or additional treatment or recovery capacity that is available on site or within the same company also are excluded from the required commercial capacity estimates. The resulting estimates of required commercial capacity then are compared to estimates of available commercial capacity. If adequate commercial capacity exists, the waste is restricted from further land disposal. If protective alternative capacity does not exist, EPA has the authority to grant a national capacity variance.

In making the estimates described above, the volume of waste requiring treatment depends on the current waste management practices employed by the waste generators before this proposed regulation is promulgated and becomes effective. Data on waste management practices for these wastes were collected during the development of this proposed rule. However, we realize that as the regulatory process proceeds, generators of these wastes may decide to minimize or recycle their wastes or otherwise alter their management practices. Thus, we will monitor changes and update data on current management practices as these changes will affect the volume of wastes ultimately requiring commercial treatment or recovery capacity.

The commercial hazardous waste treatment industry may change rapidly. For example, national commercial treatment capacity changes as new facilities come on line or old facilities go off line, and as new units and new technologies are added at existing facilities. The available capacity at commercial facilities also changes as facilities change their commercial status (*e.g.,* changing from a fully commercial to a limited commercial or ''captive''—company owned—facility). Thus, we also continue to update and monitor changes in available commercial treatment capacity.

For wastes required to meet today's proposed treatment standards, we request data on the annual generation volumes and characteristics of wastes affected by this proposed rule, including proposed hazardous wastes K176, K177, and K178 in wastewater and nonwastewater forms. We also request data on soil or debris contaminated with these wastes, residuals generated from the treatment or recycling of these wastes, and the current and planned management practices for the wastes, waste mixtures, and treatment residuals.

For available capacity to meet the LDR requirements, we request data on the current treatment or recovery capacity capable of treating these wastes, facility and unit permit status related to treatment of the proposed wastes, and any plans that facilities may expand or reduce existing capacity or construct new capacity. In addition, we request information on the time and necessary procedures required for permit modification for generators or commercial treatment or disposal facilities to manage the wastes, required changes for operating practices due to the proposed listings or proposed additional constituent to be regulated in the wastes, and any waste minimization activities associated with the wastes. Of particular interest to us are chemical and physical constraints of treatment technologies for these wastes and any problems for disposing of these wastes. Also of interest are any analytical difficulties associated with identifying and monitoring the regulated constituents in these wastes.

F. What are the Capacity Analysis Results?

This preamble only provides a summary of the capacity analysis performed to support this proposed regulation. For additional and more detailed information, please refer to the ''Background Document for Capacity Analysis for Land Disposal Restrictions: Inorganic Chemical Production Wastes (Proposed Rule),'' August 2000 (*i.e.*, the Capacity Background Document).

For this capacity analysis, we examined data on waste characteristics and management practices gathered for the inorganic chemical hazardous waste listing determinations. We also examined data on available treatment or recovery capacity for these wastes. The sources for these data are the RCRA Section 3007 Survey distributed in the spring of 1999, record sampling and site visits (see the docket for today's rule for more information on these survey instruments and facility activities), the available treatment capacity data submission that was collected in the mid-1990's, and the 1997 Biennial Report.

For K176 and K177 wastes, the information from the surveys, sampling, and site visits indicates that there is no quantity of the wastewater form of K176 or K177 that is expected to be generated and therefore, there is no quantity of the wastewater form of K176 or K177 that will require alternative commercial treatment. These wastes are typically present in a nonwastewater form. Based on the RCRA § 3007 Survey information presented in the Capacity Background Document, required alternative treatment capacity for K176 nonwastewaters is estimated to be eight tons per year. Required alternative treatment capacity for K177 nonwastewaters is estimated to be 22 tons per year. As described in the section of proposed LDR treatment standards above, we are proposing that numerical treatment standards be applied to K176 and K177 nonwastewaters. We anticipate that commercially available stabilization, as well as other technologies, can be used in meeting these treatment standards. We estimate that the commercially available stabilization capacity is at least eight million tons per year based on the 1995 Biennial Report. Thus we expect there is sufficient capacity to treat the proposed K176 and K177 hazardous wastes that would require treatment. Therefore, we are proposing not to grant a national capacity variance for K176 or K177 wastewaters or nonwastewaters.

For K178 waste (chloride-ilmenite nonexempt nonwastewaters from the production of titanium dioxide), our data indicate that the waste is typically generated as a nonwastewater. We did not identify any wastewater forms of these wastes and therefore do not anticipate that alternative management for wastewaters is required. We found that the wastes are currently land disposed. We estimated that approximately 7,300 tons per year (derived from public information since data on amounts of treatment solids are confidential as reported in § 3007 Survey) may require alternative treatment. In our assessment, we assumed that facilities can segregate wastestreams and separately manage the newly-proposed hazardous waste. Although the generation quantity (and therefore, the quantity requiring treatment) may be higher due to the derived from rule, we expect that available treatment capacity still exists.

As discussed earlier for K178 treatment standards, we are proposing that numerical treatment standards be applied to K178 wastes. We anticipate that commercially available incineration, followed by stabilization if

necessary, or high temperature metals recovery if applicable, can be used to meet these treatment standards. We also propose the technology standard of combustion (CMBST) as an alternative compliance option for hazardous organic constituents in the K178 wastes. The units treating the waste by using CMBST will be subject to certain standards, and facilities will need to meet treatment standards for all regulated metal constituents prior to disposal, as discussed in the earlier section on K178 treatment standards. We assume that facilities would achieve treatment standards using incineration, stabilization, or both. The quantity of commercially available combustion capacity for sludge and solid is a minimum of 300,000 tons per year and the quantity of commercially available stabilization capacity is at least eight million tons per year based on 1995 Biennial Report.

We have identified that there exist facilities managing K178 waste in surface impoundments (*i.e.,* in wastewater treatment systems that contain land based units). If the waste is managed in unretrofitted impoundments,[62] it would thus be land disposed in a prohibited manner. These impoundments can be retrofitted, closed or replaced with tank systems. If the impoundment continues to be used to manage K178 waste, the unit will be subject to Subtitle C requirements. In addition, any hazardous wastes managed in the affected impoundment after the effective date of today's rule are subject to land disposal prohibitions.[63] However, facilities may continue to manage newly listed K178 in surface impoundments, provided they are in compliance with the appropriate standards for impoundments (40 CFR Parts 264 and 265 subpart K) and the special rules regarding surface impoundments (40 CFR 268.14). EPA notes that those provisions require basic groundwater monitoring (40 CFR Parts 264 and 265 Subpart F), management, and recordkeeping, but (in keeping with RCRA section 3005(j)(6)(A)) are afforded up to 48 months to retrofit to meet minimum technological requirements.

Based on the foregoing, we expect that sufficient capacity to treat the proposed K178 hazardous wastes that would require treatment. Therefore, we are proposing not to grant a capacity variance for wastewater and nonwastewater forms of K178.

With respect to the revisions to the F039 and UTS lists, as discussed earlier in the section on K178 treatment standards, we are proposing to add manganese to the list of regulated constituents in F039 (§ 268.40) and the UTS table (§ 268.48). We have estimated what portion of the F039 or characteristic wastes (which require treatment of underlying hazardous constituents to UTS levels) may be required to meet these new treatment standards. We request comments on the estimates, the appropriate means of treatment (if necessary), and the sufficiency of available treatment capacity for the affected wastes by the addition of manganese to the F039 and UTS lists.

When changing the treatment requirements for wastes already subject to LDR (including F039 and characteristic wastes), EPA no longer has authority to use RCRA § 3004(h)(2) to grant a capacity variance to these wastes. However, EPA is guided by the overall objective of section 3004(h), namely that treatment standards which best accomplish the goal of RCRA § 3004(m) (to minimize threats posed by land disposal) should take effect as soon as possible, consistent with availability of treatment capacity.

We expect that only a limited quantity of hazardous waste leachate may be generated from the disposal of newly-listed K176, K177, and K178 wastes (due to the small number of generators) and added to the generation of leachates from other multiple restricted hazardous wastes already subject to LDR.

For the amount of characteristic wastes or leachates generated from those previously regulated hazardous wastes that would be subject only to the new treatment standards for manganese, we evaluated the universe of wastes that might be impacted by revisions to the lists of regulated constituents for F039 and UTS based on limited information. Based on 1997 Biennial Report data and some assumptions of waste compositions and their potential for land disposal, we were able to estimate the potential need for additional treatment. For example, we estimated an upper bound of 70,000 tons per year of nonwastewaters mixed with other waste codes, the F039 leachate from which would be potentially impacted by the revision to the F039 treatment standards. In a similar fashion, we estimated that no more than 520,000 tons per year of characteristic nonwastewaters potentially might be affected by the proposed changes (*i.e.,* the addition of manganese to the F039 and UTS lists).

These upper bound estimates are most likely very overstated since only a portion of each estimated waste volume may contain manganese at concentrations above the proposed level specified in the UTS table and the F039 list. The estimates assume that manganese is present at levels above the proposed treatment standards in all of these wastes and require alternative treatment, when it is likely that this may be true in only a small sets of the cases. Furthermore, EPA does not anticipate that waste volumes subject to treatment for F039 or characteristic wastes would significantly increase because waste generators already are required to comply with the treatment requirements for other metals that may be present in the wastes. The volumes of wastes for which additional treatment is needed solely due to the addition of manganese to the F039 and UTS lists are therefore expected to be very small. See the Capacity Background Document for detailed analysis.

However, even though our volume estimates are highly conservative and overstated, we find that there still would be no shortage of treatment capacity. Based on data submittals in the mid-1990's and the 1997 Biennial Report, EPA has estimated that approximately 37 million tons per year of commercial wastewater treatment capacity are available, and well over one million tons per year of liquid, sludge, and solid commercial combustion capacity are available. Also, as discussed earlier in this section, there exist several million tons of available stabilization capacity. These are well above the quantities of F039 or characteristic wastes potentially requiring treatment for manganese even under the conservative screening assumptions described above. Therefore, we are proposing a decision not to delay the effective date for adding manganese to the lists of constituents for F039 and UTS.

We request comment on its proposed decision not to delay the effective date for adding manganese to the lists of constituents for F039 and UTS. We request data on the annual generation volumes and characteristics of wastes potentially affected by the proposed changes to UTS and F039 in wastewater and nonwastewater forms (if any), and the current and planned management practices for the wastes, waste mixtures, and treatment residuals. We also request data on the current treatment or recovery capacity capable of treating the affected wastes.

[62] A unretrofitted impoundment is one not satisfying the minimum technology requirements (MTR) specified in sections 3004(o) and 3005(j)(11).

[63] See RCRA § 3004(m)(1) ''Simultaneously with the promulgation of regulations under subsection (d), (e), (f), or (g) prohibiting one or more methods of land disposal of a particular hazardous waste * * * promulgate regulations specifying those levels or methods of treatment * * *''

Further, for soil and debris contaminated with the newly listed wastes (K176, K177, and K178), we believe that the vast majority of contaminated soil and debris contaminated with these wastes will be managed on-site and therefore will not require substantial commercial treatment capacity. Therefore, we are not proposing to grant a national capacity variance for hazardous soil and debris contaminated with these wastes covered under this proposal. Based on the 1999 RCRA § 3007 Survey followed by record sampling and site visits, there are no data showing the newly listed wastes managed by underground injection wells. Also, based on the 1999 RCRA § 3007 Survey followed by record sampling and site visits, there are no data showing mixed radioactive wastes associated with the proposed listings. EPA is proposing to not grant a national capacity variance for underground injected wastes, mixed radioactive wastes, or soil and debris contaminated with these mixed radioactive wastes, if such wastes are generated.

Therefore, we propose that LDR treatment standards for the affected wastes covered under today's rule thus become effective when the listing determinations become effective—the earliest possible date (see RCRA section 3004(h)(1)—land disposal prohibitions must take effect immediately when there is sufficient protective treatment capacity for the waste available). However, we may need to revise capacity analyses or capacity variance decisions if final listing determinations are changed or if we receive data and information to warrant any revision.

Finally, we request comments on the estimated quantities requiring alternative treatment and information on characteristics of the affected wastes, management practices for these wastes, and available treatment, recovery or disposal capacity for the wastes. We also request comments concerning alternative management for any of these wastes managed in surface impoundments, including new piping or tank systems, and the length of time required for such activities. In addition, we solicit comments on our decision not to grant a national capacity variance or delay the effective date for any of the affected wastes. We will consider all available data and information provided during the public comment period and revise our capacity analysis accordingly in making the final capacity determinations. Please note, the ultimate volumes of wastes estimated to require alternative or additional commercial treatment may change if the final listing determinations change. Should this occur, we will revise the capacity analysis accordingly.

V. Compliance Dates

We seek comment on the proposed decisions in this section.

A. Notification

Under the RCRA Section 3010 any person generating, transporting, or managing a hazardous waste must notify EPA (or an authorized state) of its activities. Section 3010(a) allows us to waive, under certain circumstances, the notification requirement under Section 3010 of RCRA. If these hazardous waste listings are promulgated, we propose to waive the notification requirement as unnecessary for persons already identified within the hazardous waste management universe (*i.e.,* persons who have an EPA identification number under 40 CFR 262.12). We do not propose to waive the notification requirement for waste handlers who have neither notified us that they may manage hazardous wastes nor received an EPA identification number. Such individuals will have to provide notification under RCRA Section 3010.

B. Interim Status and Permitted Facilities

Because HSWA requirements are applicable in authorized states at the same time as in unauthorized states, we will regulate the newly identified wastes listed under HSWA until states are authorized to regulate these wastes. Thus, once this regulation becomes effective as a final rule, we will apply Federal regulations to these wastes and to their management in both authorized and unauthorized states.

VI. State Authority

A. Applicability of Rule in Authorized States

Under Section 3006 of RCRA, we may authorize qualified states to administer and enforce the RCRA program within the state. (See 40 CFR Part 271 for the standards and requirements for authorization.) Following authorization, we retain enforcement authority under Sections 3007, 3008, 3013, and 7003 of RCRA, although authorized states have primary enforcement responsibility.

Before the Hazardous and Solid Waste Amendments of 1984 (HSWA) amended RCRA, a state with final authorization administered its hazardous waste program entirely in lieu of the Federal program in that state. The Federal requirements no longer applied in the authorized state, and we could not issue permits for any facilities located in the state with permitting authorization. When new, more stringent Federal requirements were promulgated or enacted, the state was obligated to enact equivalent authority within specified time-frames. New Federal requirements did not take effect in an authorized state until the state adopted the requirements as state law.

By contrast, under Section 3006(g) of RCRA, 42 U.S.C. 6926(g), new requirements and prohibitions imposed by the HSWA (including the hazardous waste listings in this proposal) take effect in authorized states at the same time that they take effect in non-authorized states. EPA is directed to implement those requirements and prohibitions in authorized states, including the issuance of permits, until the state is granted authorization to do so. While states must still adopt HSWA-related provisions as state law to retain final authorization, the Federal HSWA requirements apply in authorized states in the interim.

B. Effect on State Authorizations

Because this proposal (with the exception of the actions proposed under CERCLA authority) will be promulgated pursuant to the HSWA, a state submitting a program modification is able to apply to receive either interim or final authorization under Section 3006(g)(2) or 3006(b), respectively, on the basis of requirements that are substantially equivalent or equivalent to EPA's requirements. The procedures and schedule for state program modifications under 3006(b) are described in 40 CFR 271.21. It should be noted that all HSWA interim authorizations are currently scheduled to expire on January 1, 2003 (see 57 FR 60129, February 18, 1992).

Section 271.21(e)(2) of EPA's state authorization regulations (40 CFR Part 271) requires that states with final authorization modify their programs to reflect federal program changes and submit the modifications to EPA for approval. The deadline by which the states must modify their programs to adopt this proposed regulation, if it is adopted as a final rule, will be determined by the date of promulgation of a final rule in accordance with 40 CFR 271.21(e)(2). If the proposal is adopted as a final rule, Table 1 at 40 CFR 271.1 will be amended accordingly. Once we approve the modification, the state requirements become RCRA Subtitle C requirements.

States with authorized RCRA programs already may have regulations similar to those in this proposed rule. These state regulations have not been assessed against the Federal regulations being proposed to determine whether they meet the tests for authorization.

Thus, a state would not be authorized to implement these regulations as RCRA requirements until state program modifications are submitted to EPA and approved, pursuant to 40 CFR 271.21. Of course, States with existing regulations that are more stringent than or broader in scope than current Federal regulations may continue to administer and enforce their regulations as a matter of state law.

It should be noted that authorized states are required to modify their programs only when EPA promulgates Federal standards that are more stringent or broader in scope than existing Federal standards. Section 3009 of RCRA allows states to impose standards more stringent than those in the Federal program. For those Federal program changes that are less stringent or reduce the scope of the Federal program, states are not required to modify their programs. See 40 CFR 271.1(I). This proposed rule, if finalized, is neither less stringent than nor a reduction in the scope or the current Federal program, and, therefore, states would be required to modify their programs to retain authorization to implement and enforce these regulations.

VII. Designation of Inorganic Chemical Wastes under the Comprehensive Environmental Response, Compensation, and Liability Act (CERCLA)

All hazardous wastes listed under RCRA and codified in 40 CFR 261.31 through 261.33, as well as any solid waste that is not excluded from regulation as a hazardous waste under 40 CFR 261.4(b) and that exhibits one or more of the characteristics of a RCRA hazardous waste (as defined in 40 CFR 261.21 through 261.24), are hazardous substances under the Comprehensive Environmental Response, Compensation, and Liability Act of 1980 (CERCLA), as amended (see CERCLA Section 101(14)(C)). CERCLA hazardous substances are listed in Table 302.4 at 40 CFR 302.4 along with their reportable quantities (RQs). If a hazardous substance is released in an amount that equals or exceeds its RQ, the release must be reported immediately to the National Response Center (NRC) pursuant to CERCLA Section 103.

A. Reporting Requirements

Under CERCLA Section 103(a), the person in charge of a vessel or facility from which a hazardous substance has been released in a quantity that is equal to or exceeds its RQ must immediately notify the NRC as soon as that person has knowledge of the release. The toll-free telephone number of the NRC is 1–800–424–8802; in the Washington, DC, metropolitan area, the number is (202) 267–2675. In addition to this reporting requirement under CERCLA, Section 304 of the Emergency Planning and Community Right-to-Know Act of 1986 (EPCRA) requires owners or operators of certain facilities to report releases of extremely hazardous substances and CERCLA hazardous substances to State and local authorities. Immediately after the release of an RQ or more of an extremely hazardous substance or a CERCLA hazardous substance, EPCRA Section 304 notification must be given to the community emergency coordinator of the local emergency planning committee for any area likely to be affected by the release, and to the State emergency response commission of any State likely to be affected by the release.

Under Section 102(b) of CERCLA, all hazardous substances (as defined by CERCLA Section 101(14)) have a statutory RQ of one pound, unless and until the RQ is adjusted by regulation. In today's proposed rule, we propose: (1) to list the following three wastestreams as RCRA hazardous wastes; (2) to designate these wastestreams as CERCLA hazardous substances, and (3) to adjust the one-pound statutory RQs for two of these wastestreams. The proposed wastestreams are as follows:

K176 Baghouse filters from the production of antimony oxide

K177 Slag from the production of antimony oxide that is disposed of or speculatively accumulated

K178 Nonwastewaters from the production of titanium dioxide by the chloride-ilmenite process. [This listing does not apply to chloride process waste solids from titanium tetrachloride production exempt under 40 CFR 261.4(b)(7).]

B. Basis for Proposed RQ Adjustment

Our methodology for adjusting the RQs of individual hazardous substances begins with an evaluation of the intrinsic physical, chemical, and toxicological properties of each hazardous substance. The intrinsic properties examined—called ''primary criteria''—are aquatic toxicity, mammalian toxicity (oral, dermal, and inhalation), ignitability, reactivity, chronic toxicity, and potential carcinogenicity.

Generally, for each intrinsic property, we rank the hazardous substance on a five-tier scale, associating a specific range of values on each scale with an RQ value of 1, 10, 100, 1,000, or 5,000 pounds. Based on the various primary criteria, the hazardous substance may receive several tentative RQ values. The lowest of the tentative RQs becomes the ''primary criteria RQ'' for that substance.

After the primary criteria RQ is assigned, the substance is evaluated further for its susceptibility to certain degradative processes, which are used as secondary RQ adjustment criteria. These natural degradative processes are biodegradation, hydrolysis, and photolysis (BHP). If a hazardous substance, when released into the environment, degrades relatively rapidly to a less hazardous form by one or more of the BHP processes, its primary criteria RQ is generally raised one level. Conversely, if a hazardous substance degrades to a more hazardous product after its release, the original substance is assigned an RQ equal to the RQ for the more hazardous substance, which may be one or more levels lower than the RQ for the original substance.

The standard methodology used to adjust the RQs for RCRA hazardous wastestreams differs from the methodology applied to individual hazardous substances. The procedure for assigning RQs to RCRA wastestreams is based on an analysis of the hazardous constituents of the wastestreams. The constituents of each RCRA hazardous wastestream are identified in 40 CFR part 261, Appendix VII. We determine an RQ for each constituent within the wastestream and establish the lowest RQ value of these constituents as the adjusted RQ for the wastestream.

In today's proposed rule, we propose to assign a one-pound adjusted RQ to the K176 wastestream and 5,000 pounds to the K177 wastestream. The proposed adjusted RQs for both of these wastestreams are based on the lowest RQ value of the constituents present in each wastestream, are presented in Table VII–1 below. We seek comment our proposed adjustments to the RQ values for these wastes. We are not adjusting the RQ for K178 at this time because we have not yet developed a ''waste constituent RQ'' for manganese, one of the constituents of concern in this waste.

TABLE VII–1.—PROPOSED ADJUSTED RQS FOR WASTESTREAMS K176, K177, AND K178

Wastestream	Wastestream constituent	Wastestream constituent RQ (lb.)	Wastestream RQ (lb.)
K176	arsenic	1	1
	lead	10	.....
K177	antimony	5,000	5,000

VIII. Administrative Assessments

A. Executive Order 12866

Under Executive Order 12866, [58 FR 51,735 (October 4, 1993)] the Agency must determine whether the regulatory action is ''significant'' and therefore subject to OMB review and the requirements of the Executive Order. The Order defines ''significant regulatory action'' as one that is likely to result in a rule that may: (1) Have an annual effect on the economy of $100 million or more or adversely affect in a material way the economy, a sector of the economy, productivity, competition, jobs, the environment, public health or safety, or State, local, or tribal governments or communities; (2) create a serious inconsistency or otherwise interfere with an action taken or planned by another agency; (3) materially alter the budgetary impact of entitlements, grants, user fees, or loan programs or the rights and obligations of recipients thereof; or (4) raise novel, legal or policy issues arising out of legal mandates, the President's priorities, or the principles set forth in the Executive Order.

The Agency estimated the costs of today's proposed rule to determine if it is a significant regulation as defined by the Executive Order. The analysis considered compliance costs and economic impacts for inorganic chemical producers affected by this rule. We estimate the total cost of the rule to be $3 million annually. This analysis suggests that this rule is not economically significant according to the definition in E.O. 12866. The Office of Management and Budget has deemed this rule to be significant for novel policy reasons and has reviewed this rule.

Detailed discussions of the methodology used for estimating the costs, economic impacts and the benefits attributable to today's proposed rule for listing hazardous wastes from inorganic chemical production, followed by a presentation of the cost, economic impact and benefit results, may be found in the background document: ''Economic Analysis of the Proposed Rule For Listing Hazardous Waste From Inorganic Chemical Production,'' which was placed in the docket for today's proposed rule. We seek comment on the methodology used, the projected economic impacts, and the benefits assumed for the proposed listings.

1. Methodology Section

To estimate the cost, economic impacts to potentially affected firms and benefits to society from this proposed rulemaking, We evaluated § 3007 Survey responses from inorganic chemical producers, firm financial reports, and chemical production data. The Agency has developed model facilities that represent composite information about inorganic chemical producers at both the facility and firm level. We also evaluated two scenarios. The first scenario evaluates the cost of listing all wastes that we propose to list in today's proposal. The second scenario includes not only wastes that EPA has proposed to list but also any waste that has exceeded risk screens (or other screening criteria) and had quantitative risk assessment completed. Analysis of these scenarios allows the public to understand what costs would have resulted from this rule making if all of the quantitative risk assessments involving fate and transport modeling had shown risk to human health.

To estimate the incremental cost of this rule making, we reviewed baseline management practices and costs of potentially affected firms. Where more than one baseline management method was used (*e.g.* municipal incineration and landfilling), we either modeled more than one form of baseline management or selected the least expensive form of baseline management (which would overestimate rather than underestimate the cost of the rule).

The Agency has modeled the most likely post-regulatory scenario resulting from the listing (*e.g.,* disposal in a Subtitle C hazardous waste landfill, recycling) and estimated the cost of complying with it. The difference between the baseline management cost and the post-regulatory cost is the incremental cost of the rulemaking.

To estimate the economic impact of today's proposed rulemaking, we compared the incremental cost of the rulemaking with model firm sales and either net profit or product value. The Agency has also considered the ability of potentially affected firms to pass compliance costs on in the form of higher prices.

To estimate the benefits of today's proposal, we evaluated risk assessment results and as well as a qualitative assessment of benefits including natural resource protection of groundwater.

2. Results

a. Volume Results. Data reviewed by the Agency indicates that there are 9 inorganic chemical producers potentially affected by today's proposed rule. The data report that these firms generated 700,000 tons of inorganic chemical production waste annually that are potentially affected by today's proposed rule and modeled under Scenario 1. Data also indicate that there are 26 inorganic chemical producers who have generated wastes that are either being listed because they exhibit a characteristic or have been evaluated for quantitative risk assessment involving fate and transport modeling by the Agency to evaluate their potential effect on human health and the environment. These wastes are being modeled under Scenario 2.

b. Cost Results. For today's proposed rule, we estimate the total annual incremental costs from today's proposal to be $ 2.5 million for all facilities. Sectors costs are summarized in Table 2.

TABLE VIII–1.—ESTIMATED INCREMENTAL COST BY INORGANIC CHEMICAL SECTOR

Sector	Estimated incremental annual costs $ 000s (1999 $)		Number of affected facilities	
	Scenario 1	Scenario 2	Scenario 1	Scenario 2
Antimony Oxide	1.6 (recycling), 35 (disposal).	1.6 (recycling), 35 (disposal).	3	3
Hydrogen Cyanide		215	3	5
Sodium Chlorate		225	0	5
Sodium Phosphate		76	0	4
Titanium Dioxide	2900	6500	3	9
Total	2937	7051	9	26

c. Economic Impact Results. To estimate potential economic impacts resulting from today's proposed rule, we used first order economic impacts measures such as the estimated incremental costs of today's proposed rule as a percentage of both affected firms' sales and estimated profits [64]. We applied these measures to affected inorganic chemical producers. For affected inorganic chemical producers in the antimony oxide and sodium chlorate sectors, we estimated the costs to be less than 3 percent of a typical firm's sales and less than 2 percent of a firm's estimated profits. For affected inorganic chemical producers in the hydrogen cyanide sector, we estimated the cost to be less than 1 percent of a typical firm's sales and estimated profits. More detailed information on this estimate can be found in the economic analysis placed into today's docket.

d. Benefits Assessment. EPA has not conducted a quantitative assessment of actual benefits from this proposed rule. Because today's proposed rule results in new hazardous waste management requirements for K176, K177, and K178 wastes, the Agency believes that there may be a reduction in releases of hazardous constituents to the environment.

B. Regulatory Flexibility Act (RFA), as amended by the Small Business Regulatory Enforcement Fairness Act of 1996 (SBREFA), 5 USC 601 et. seq.

The RFA generally requires an agency to prepare a regulatory flexibility analysis of any rule subject to notice and comment rulemaking requirements under the Administrative Procedures Act or any other statute unless the agency certifies that the rule will not have a significant economic impact on a substantial number of small entities. Small entities include small businesses, small organizations, and small governmental jurisdictions.

For purposes of assessing the impacts of today's rule on small entities, a small entity is defined as: (1) A small business that has fewer than 1000 or 100 employees per firm depending upon the SIC code the firm primarily classified in [65]; (2) a small governmental jurisdiction that is a government of a city, county, town, school district or special district with a population of less than 50,000; and (3) a small organization that is any not-for-profit enterprise which is independently owned and operated and is not dominant in its field.

After considering the economic impacts of today's proposed rule on small entities, I certify that this action will not have a significant economic impact on a substantial number of small entities.

There are two potentially affected inorganic producing firms that constitute small entities. These firms are located in the antimony oxide sector. We have determined that these two firms would under this proposal incur costs of less than 1 percent of both the firm's sales and estimated profits under one scenario analyzed for the wastes in this sector. We continue to be interested in the potential impacts of the proposed rule on small entities and welcome comments on issues related to such impacts.

C. Paperwork Reduction Act

The information collection requirements in this proposed rule have been submitted for approval to the Office of Management and Budget (OMB) under the Paperwork Reduction Act, 44 U.S.C. 3501 *et seq.* An Information Collection Request (ICR) document has been prepared (ICR No. 1968.01) and a copy may be obtained from Sandy Farmer by mail at Collection Strategies Division; U.S. Environmental Protection Agency (2822); 1200 Pennsylvania Ave., NW, Washington, DC 20460,by email at farmer.sandy@epamail.epa.gov, or by calling (202) 260–2740. A copy may also be downloaded off the internet at *http://www.epa.gov/icr.*

This rule is proposed under the authority of sections 3001(e)(2) and 3001(b)(1) of the Hazardous and Solid Waste Amendments (HSWA) of 1984. The effect of listing the wastes described earlier will be to subject industry to management and treatment standards under the Resource Conservation and Recovery Act (RCRA).

This proposed rule does not contain any new information collection requirements, nor does it propose to modify any existing information collection requirements. As a result, this proposed rule represents only an incremental increase in burden for generators and subsequent handlers of the newly listed wastes in complying with existing RCRA information collection requirements.

The total annual respondent burden and cost for all existing paperwork associated with this proposed rule presented here represents the incremental increase in paperwork burden under six existing Information Collection Requests (ICRs). We estimate the total annual respondent burden for

[64] Because profit information is often either unavailable or more variable from year to year than sales measures, the Agency has chose to use a profit surrogate in completing the economic impact analysis of this proposal. According to Dun and Bradstreet's Industry Norms and Key Business Indicators (1995) the average net after tax profit for inorganic chemical producers in the 2819 SIC code was 6.3 percent. This percentage is applied to reported sales of affected firms in order to estimate their profits.

[65] The Small Business Administration has classified firms in the manufacturing sector (SIC Codes 20–39) and wholesale trade sector (SIC Codes 50–51) as small businesses within the sector based on the number of employees per firm. See Small Business Size Standards, 61 FR 3280, 3289 (January 31, 1996). Thus, to determine if a inorganic chemical producer is a small business, the primary SIC code of the firm would have to be determined. The small entities in today's rulemaking are in two SIC codes: (1) 2812 Alkalies and Chlorine, size standard 1000 employees and (2) 5082 Construction and Mining (except Petroleum) Machinery and Equipment size standard 100 employees.

all information collection activities to be approximately 417 hours, at an annual cost of approximately $19,916.

Comments are requested on the Agency's need for this information, the accuracy of the provided burden estimates, and any suggested methods for minimizing respondent burden, including through the use of automated collection techniques. Send comments on the ICR to the Director, Collection Strategies Division; U.S. Environmental Protection Agency (2822); 1200 Pennsylvania Ave., NW, Washington, DC 20460; and to the Office of Information and Regulatory Affairs, Office of Management and Budget, 725 17th St., N.W., Washington, DC 20503, marked ''Attention: Desk Officer for EPA.'' Include the ICR number in any correspondence. Since OMB is required to make a decision concerning the ICR between 30 and 60 days after September 14, 2000, a comment to OMB is best assured of having its full effect if OMB receives it by October 16, 2000. The proposed rule will respond to any OMB or public comments on the information collection requirements contained in this proposal.

D. Unfunded Mandates Reform Act

Title II of the Unfunded Mandates Reform Act of 1995 (UMRA), Public Law 104–4, establishes requirements for Federal agencies to assess the effects of their regulatory actions on State, local, and tribal governments and the private sector. Under section 202 of the UMRA, EPA generally must prepare a written statement, including a cost-benefit analysis, for proposed and final rules with ''Federal mandates'' that may result in expenditures to State, local, and tribal governments, in the aggregate, or to the private sector, of $100 million or more in any one year. Before promulgating an EPA rule for which a written statement is needed, section 205 of the UMRA generally requires EPA to identify and consider a reasonable number of regulatory alternatives and adopt the least costly, most cost-effective or least burdensome alternative that achieves the objectives of the rule. The provisions of section 205 do not apply when they are inconsistent with applicable law. Moreover, section 205 allows EPA to adopt an alternative other than the least costly, most cost-effective or least burdensome alternative if the Administrator publishes with the proposed rule an explanation why that alternative was not adopted. Before EPA establishes any regulatory requirements that may significantly or uniquely affect small governments, including tribal governments, it must have developed under section 203 of the UMRA a small government agency plan. The plan must provide for notifying potentially affected small governments, enabling officials of affected small governments to have meaningful and timely input in the development of EPA regulatory proposals with significant Federal intergovernmental mandates, and informing, educating, and advising small governments on compliance with the regulatory requirements.

Today's rule contains no Federal mandates (under the regulatory provisions of Title II of the UMRA) for State, local, or tribal governments or the private sector. The rule would not impose any federal intergovernmental mandate because it imposes no enforceable duty upon state, tribal or local governments. States, tribes and local governments would have no compliance costs under this rule. It is expected that states will adopt similar rules, and submit those rules for inclusion in their authorized RCRA programs, but they have no legally enforceable duty to do so. For the same reasons, we determined that this rule contains no regulatory requirements that might significantly or uniquely affect small governments. We have fulfilled the requirement for analysis under the Unfunded Mandates Reform Act.

E. Executive Order 12898: Environmental Justice

EPA is committed to addressing environmental justice concerns and is assuming a leadership role in environmental justice initiatives to enhance environmental quality for all populations in the United States. The Agency's goals are to ensure that no segment of the population, regardless of race, color, national origin, or income bears disproportionately high and adverse human health or environmental impacts as a result of EPA's policies, programs, and activities, and that all people live in safe and healthful environments. In response to Executive Order 12898 and to concerns voiced by many groups outside the Agency, EPA's Office of Solid Waste and Emergency Response formed an Environmental Justice Task Force to analyze the array of environmental justice issues specific to waste programs and to develop an overall strategy to identify and address these issues (OSWER Directive No. 9200.3–17).

Today's proposed rule covers wastes from inorganic chemical production. It is not certain whether the environmental problems addressed by this rule could disproportionately affect minority or low-income communities. Today's proposed rule is intended to reduce risks of hazardous wastes as proposed, and to benefit all populations. As such, this rule is not expected to cause any disproportionately high and adverse impacts to minority or low-income communities versus non-minority or affluent communities.

In making hazardous waste listing determinations, we base our evaluations of potential risk from the generation and management of solid wastes on an analysis of potential individual risk. In conducting risk evaluations, our goal is to estimate potential risk to any population of potentially exposed individuals (*e.g.,* home gardeners, adult farmers, children of farmers, anglers) located in the vicinity of any generator or facility handling a waste. Therefore, we are not putting poor, rural, or minority populations at any disadvantage with regard to our evaluation of risk or with regard to how the Agency makes its proposed hazardous waste listing determinations.

In proposing today to list wastes as hazardous (*i.e.,* filter baghouses and low antimony slags from antimony oxide production that are discarded, nonexempt nonwastewater from the titanium dioxide chloride-ilmenite process,), all populations potentially exposed to these wastes or potentially exposed to releases of the hazardous constituents in the wastes will benefit from the proposed listing determination. In addition, listing determinations take effect at the national level. The wastes proposed to be listed as hazardous will be hazardous regardless of where they are generated and regardless of where they may be managed. Although the Agency understands that the proposed listing determinations, if finalized, may affect where these wastes are managed in the future (in that hazardous wastes must be managed at subtitle C facilities), the Agency's decision to list these wastes as hazardous is independent of any decisions regarding the location of waste generators and the siting of waste management facilities.

Similarly, in cases where the Agency is proposing not list a solid waste as hazardous because the waste does not meet the criteria for being identified as a hazardous waste, these decisions are based upon an evaluation of potential individual risks located in proximity to any facility handling the waste. Therefore, any population living proximately to a facility that produces a solid waste that the Agency has proposed not to list would not be adversely affected either because the waste is already being managed as a hazardous waste in the Subtitle C system or because the solid waste does not pose a sufficient risk to the local population. We encourage all

stakeholders including members of the environmental justice community and members of the regulated community to provide comments or further information related to potential environmental justice concerns or impacts, including information and data on facilities that have evaluated potential ecological and human health impacts (taking into account subsistence patterns and sensitive populations) to minority or low-income communities.

F. Executive Order 13045: Protection of Children From Environmental Health Risks and Safety Risks

Executive Order 13045, ''Protection of Children from Environmental Health Risks and Safety Risks'' (62 FR 19885, April 23, 1997), applies to any rule that: (1) is determined to be ''economically significant'' as defined under Executive Order 12866, and (2) concerns an environmental health or safety risk that EPA has reason to believe may have a disproportionate effect on children. If the regulatory action meets both criteria, the Agency must evaluate the environmental health or safety effects of the planned rule on children, and explain why the planned regulation is preferable to other potentially effective and reasonably feasible alternatives considered by the Agency. This proposed rule is not subject to the Executive Order because it is not economically significant as defined in E.O. 12866, and because the Agency does not have reason to believe the environmental health or safety risks addressed by this action present a disproportionate risk to children.

The topic of environmental threats to children's health is growing in regulatory importance as scientists, policy makers, and village leaders continue to recognize the extent to which children are particularly vulnerable to environmental hazards. Recent EPA actions have been in the forefront of addressing environmental threats to the health and safety of children. Today's proposed rule further reflects our commitment to mitigating environmental threats to children.

A few significant physiological characteristics are largely responsible for children's increased susceptibility to environmental hazards. First, children eat proportionately more food, drink proportionately more fluids, and breathe more air per pound of body weight than do adults. As a result, children potentially experience greater levels of exposure to environmental threats than do adults. Second, because children's bodies are still in the process of development, their immune systems, neurological systems, and other immature organs can be more easily and considerably affected by environmental hazards.

Today's proposed rule is intended to avoid releases of hazardous constituents to the environment at levels that will cause unacceptable risks. We considered risks to children in our risk assessment. The more appropriate and safer management practices proposed in this rule are projected to reduce risks to children potentially exposed to the constituents of concern. The public is invited to submit or identify peer-reviewed studies and data, of which the agency may not be aware, that assess results of early life exposure to the proposed hazardous constituents from wastes from inorganic chemical production proposed for listing in today's rulemaking.

G. Executive Order 13084: Consultation and Coordination With Indian Tribal Governments

Under Executive Order 13084, EPA may not issue a regulation that is not required by statute, that significantly or uniquely affects the communities of Indian tribal governments, and that imposes substantial direct compliance costs on those communities, unless the Federal government provides the funds necessary to pay the direct compliance costs incurred by the tribal governments, or EPA consults with those governments. If EPA complies by consulting, Executive Order 13084 requires EPA to provide to the Office of Management and Budget, in a separately identified section of the preamble to the rule, a description of the extent of EPA's prior consultation with representatives of affected tribal governments, a summary of the nature of their concerns, and a statement supporting the need to issue the regulation. In addition, Executive Order 13084 requires EPA to develop an effective process permitting elected officials and other representatives of Indian tribal governments ''to provide meaningful and timely input in the development of regulatory policies on matters that significantly or uniquely affect their communities.''

For the reasons described above, today's proposed rule does not create a mandate on State, local or tribal governments, nor does it impose any enforceable duties on these entities. Accordingly, the requirements of section 3(b) of Executive Order 13084 do not apply to this rule.

H. Executive Order 13132—Federalism

Executive Order 13132, entitled ''Federalism'' (64 FR 43255, August 10, 1999), requires EPA to develop an accountable process to ensure ''meaningful and timely input by State and local officials in the development of regulatory policies that have federalism implications.'' ''Policies that have federalism implications'' is defined in the Executive Order to include regulations that have ''substantial direct effects on the States, on the relationship between the national government and the States, or on the distribution of power and responsibilities among the various levels of government.''

Under Section 6 of Executive Order 13132, EPA may not issue a regulation that has federalism implications, that imposes substantial direct compliance costs, and that is not required by statute, unless the Federal government provides the funds necessary to pay the direct compliance costs incurred by State and local governments, or EPA consults with State and local officials early in the process of developing the proposed regulation. EPA also may not issue a regulation that has federalism implications and that preempts State law, unless the Agency consults with State and local officials early in the process of developing the proposed regulation.

Section 4 of the Executive Order contains additional requirements for rules that preempt State or local law, even if those rules do not have federalism implications (*i.e.,* the rules will not have substantial direct effects on the States, on the relationship between the national government and the states, or on the distribution of power and responsibilities among the various levels of government). Those requirements include providing all affected State and local officials notice and an opportunity for appropriate participation in the development of the regulation. If the preemption is not based on express or implied statutory authority, EPA also must consult, to the extent practicable, with appropriate State and local officials regarding the conflict between State law and Federally protected interests within the agency's area of regulatory responsibility.

This proposed rule does not have federalism implications. It will not have substantial direct effects on the States, on the relationship between the national government and the States, or on the distribution of power and responsibilities among the various levels of government, as specified in Executive Order 13132. This proposed rule directly affects primarily inorganic chemical producers. There are no State and local government bodies that incur direct compliance costs by this rulemaking. State and local government

implementation expenditures are expected to be less than $500,000 in any one year.[66] Thus, the requirements of section 6 of the Executive Order do not apply to this rule.

This proposed rule would preempt State and local law that is less stringent for these inorganic chemical production wastes as hazardous wastes. Under the Resource Conservation and Recovery Act (RCRA), 42 U.S.C. 6901 to 6992k, the relationship between the States and the national government with respect to hazardous waste management is established for authorized State hazardous waste programs, 42 U.S.C. 6926 (3006), and retention of State authority, 42 U.S.C. 6929 (3009). Under section 3009 of RCRA, States and their political subdivisions may not impose requirements less stringent for hazardous waste management than the national government. By publishing and inviting comment on this proposed rule, we hereby provide State and local officials notice and an opportunity for appropriate participation. Thus, we have complied with the requirements of section 4 of the Executive Order.

I. National Technology Transfer and Advancement Act

Section 12(d) of the National Technology Transfer and Advancement Act of 1995 (''NTTAA''), Public Law 104–113, section 12(d) (15 U.S.C. 272 note) directs EPA to use voluntary consensus standards in its regulatory activities, unless to do so would be inconsistent with applicable law or otherwise impractical. Voluntary consensus standards are technical standards (*e.g.,* materials specifications, test methods, sampling procedures, and business practices) that are developed or adopted by voluntary consensus standards bodies. The NTTAA directs EPA to provide Congress, through OMB, explanations when the Agency decides not to use available and applicable voluntary consensus standards. This proposed rulemaking involves technical standards. EPA proposes to use Toxicity Characteristic Leaching Procedure (TCLP) for treatment standards for associated with hazardous metal constituents in wastes proposed for listing in today's proposal. The TCLP is the standard test method used to evaluate the toxicity characteristic for the definition of hazardous waste (see 40 CFR 261.24) and treatment standards for metal constituents under the Land Disposal Restrictions (see 40 CFR 268.40 and 268.48.). The Agency has used the TCLP in completing its treatment standards for the same hazardous metal constituents across a range of listed and characteristic hazardous wastes. The performance level for leachability is based on the Best Commercially-Available Demonstrated Technology (BDAT). The use of the TCLP for the same constituents assures uniformity and consistency in the treatment of hazardous waste in fulfillment of the Congressional Mandate to minimize long-term threats to human health or the environment. 42 U.S.C. 6924(m). The use of any voluntary consensus standard would be impractical with applicable law because it would require a different leaching method than is currently used to determine hazardous characteristics. The use of different chemical methods to assess hazardousness of the waste and compliance with treatment standards would create disparate results between hazardous waste identification and effective treatment of land disposed hazardous wastes. We have not, therefore, used any voluntary consensus standards. EPA welcomes comments on this aspect of the proposed rulemaking and, specifically, invites the public to identify potentially-applicable voluntary consensus standards and to explain why such standards should be used in this regulation. EPA has also issued an advanced notice of proposed rulemaking for the Land Disposal Restriction program (65 FR 37932, June 19, 2000) that has included discussion on the effectiveness of stabilization on metals in hazardous wastes.

List of Subjects

40 CFR Part 148

Environmental protection, Administrative practice and procedure, Hazardous waste, Reporting and recordkeeping requirements, Water supply.

40 CFR Part 261

Environmental protection, Hazardous materials, Waste treatment and disposal, Recycling.

40 CFR Part 268

Environmental protection, Hazardous materials, Waste management, Reporting and recordkeeping requirements, Land Disposal Restrictions, Treatment Standards.

40 CFR Part 271

Environmental protection, Administrative practice and procedure, Confidential business information, Hazardous material transportation, Hazardous waste, Indians-lands, Intergovernmental relations, Penalties, Reporting and recordkeeping requirements, Water pollution control, Water supply.

40 CFR Part 302

Environmental protection, Air pollution control, Chemicals, Emergency Planning and Community Right-to-Know Act, Extremely hazardous substances, Hazardous chemicals, Hazardous materials, Hazardous materials transportation, Hazardous substances, Hazardous wastes, Intergovernmental relations, Natural resources, Reporting and recordkeeping requirements, Superfund, Waste treatment and disposal, Water pollution control, Water supply.

Dated: August 30, 2000.

Carol M. Browner,

Administrator.

For the reasons set forth in the preamble, title 40, chapter I of the Code of Federal Regulations is proposed to be amended as follows:

PART 148—HAZARDOUS WASTE INJECTION RESTRICTIONS

1. The authority citation for Part 148 continues to read as follows:

Authority: Secs. 3004, Resource Conservation and Recovery Act, 42 U.S.C. 6901 *et seq.*

2. Section 148.18 is amended by adding paragraphs (l) and (m) to read as follows:

§ 148.19 Waste-specific prohibitions newly listed and identified wastes.

* * * * *

(l) Effective [date six months after publication of final rule], the wastes specified in 40 CFR 261.32 as EPA Hazardous Waste Numbers K176, K177, and K178 are prohibited from underground injection.

(m) The requirements of paragraphs (a) through (l) of this section do not apply:

(1) If the wastes meet or are treated to meet the applicable standards specified in subpart D of part 268 of this chapter; or

(2) If an exemption from a prohibition has been granted in response to a petition under subpart C of this part; or

(3) During the period of extension of the applicable effective date, if an extension has been granted under § 148.4.

PART 261—IDENTIFICATION AND LISTING OF HAZARDOUS WASTE

3. The authority citation for Part 261 continues to read as follows:

Authority: 42 U.S.C. 6905, 6912(a), 6921, 6922, 6924(y), and 6938.

[66] For more information, please refer to Appendix C of the background document ''Economic Analysis of the Proposed Rule For Listing Hazardous Waste From Inorganic Chemical Production,'' which was placed in the docket for today's proposed rule.

4. Section 261.4 is amended by revising paragraph (b)(15) to read as follows:

§ 261.4 Exclusions.

* * * * *

(b) * * *

(15) Leachate or gas condensate collected from landfills where certain solid wastes have been disposed, provided that:

(i) The solid wastes disposed would meet one or more of the listing descriptions for Hazardous Waste Codes K169, K170, K171, K172, K174, K175, K176, K177, and K178, if these wastes had been generated after the effective date of the listing;

(ii) The solid wastes described in paragraph (b)(15)(i) of this section were disposed prior to the effective date of the listing:

(iii) The leachate or gas condensate do not exhibit any characteristic of hazardous waste nor are derived from any other listed hazardous waste;

(iv) Discharge of the leachate or gas condensate, including leachate or gas condensate transferred from the landfill to a POTW by truck, rail, or dedicated pipe, is subject to regulation under Sections 307(b) or 402 of the Clean Water Act.

(v) After February 13, 2001, leachate or gas condensate derived from K169–K172 will no longer be exempt if it is stored or managed in a surface impoundment prior to discharge. After [date 24 months after publication date of the final rule], leachate or gas condensate derived from K176, K177, and K178 will no longer be exempt if it is stored or managed in a surface impoundment prior to discharge. There is one exception: if the surface impoundment is used to temporarily store leachate or gas condensate in response to an emergency situation (*e.g.,* shutdown of wastewater treatment system), provided the impoundment has a double liner, and provided the leachate or gas condensate is removed from the impoundment and continues to be managed in compliance with the conditions of paragraph (b)(15)(v) after the emergency ends.

* * * * *

5. In § 261.32, the table is amended by adding in alphanumeric order (by the first column) the following wastestreams to the subgroup ''Inorganic Chemicals'' to read as follows:

§ 261.32 Hazardous waste from specific sources.

* * * * *

Industry and EPA hazardous waste No.	Hazardous waste	Hazardous code
*	*	*
Inorganic chemicals:		
*	*	*
K176	Baghouse filters from the production of antimony oxide	(E)
K177	Slag from the production of antimony oxide that is disposed of or speculatively accumulated	(T)
K178	Nonwastewaters from the production of titanium dioxide by the chloride-ilmenite process. [This listing does not apply to chloride process waste solids from titanium tetrachloride production exempt under section 261.4(b)(7)].	(T)
*	*	*

* * * * *

6. Appendix VII to Part 261 is amended by adding the following wastestreams in alphanumeric order (by the first column) to read as follows:

APPENDIX VII TO PART 261—BASIS FOR LISTING HAZARDOUS WASTE

EPA hazardous waste No.	Hazardous constituents for which listed
*	*
K176	Arsenic, lead.
K177	Antimony.
K178	Manganese, thallium.

* * * * *

7. Appendix VIII to Part 261 is amended by adding in alphabetical sequence of common name the following entries:

APPENDIX VIII TO PART 261—HAZARDOUS CONSTITUENTS

Common name	Chemical abstracts name	Chemical abstracts No.	Hazardous waste No.
*	*	*	*
Manganese	Same	7439–96–5	
*	*	*	*

PART 268—LAND DISPOSAL RESTRICTIONS

8. The authority citation for Part 268 continues to read as follows:

Authority: 42 U.S.C. 6905, 6912(a), 6921, and 6924.

Subpart C—Prohibitions on Land Disposal

9. Section 268.36 is added to read as follows:

§ 268.36 Waste specific prohibitions—inorganic chemical wastes.

(a) Effective [*date six months from date of publication of final rule*], the wastes specified in 40 CFR Part 261 as EPA Hazardous Wastes Numbers K176, K177, and K178, and soil and debris contaminated with these wastes, radioactive wastes mixed with these wastes, and soil and debris contaminated with radioactive wastes mixed with these wastes are prohibited from land disposal.

(b) The requirements of paragraph (a) of this section do not apply if:

(1) The wastes meet the applicable treatment standards specified in Subpart D of this Part;

(2) Persons have been granted an exemption from a prohibition pursuant to a petition under § 268.6, with respect to those wastes and units covered by the petition;

(3) The wastes meet the applicable treatment standards established pursuant to a petition granted under § 268.44;

(4) Hazardous debris has met the treatment standards in § 268.40 or the alternative treatment standards in § 268.45; or

(5) Persons have been granted an extension to the effective date of a prohibition pursuant to § 268.5, with respect to these wastes covered by the extension.

(c) To determine whether a hazardous waste identified in this section exceeds the applicable treatment standards specified in § 268.40, the initial generator must test a sample of the waste extract or the entire waste, depending on whether the treatment standards are expressed as concentrations in the waste extract or the waste, or the generator may use knowledge of the waste. If the waste contains regulated constituents in excess of the applicable Subpart D levels, the waste is prohibited from land disposal, and all requirements of Part 268 are applicable, except as otherwise specified.

10. In § 268.40, the Table is amended by adding in alphanumeric order new entries for K176, K177, and K178 to read as follows:

§ 268.40 Applicability of treatment standards.

* * * * *

TREATMENT STANDARDS FOR HAZARDOUS WASTES

[Note: NA means not applicable]

Waste code	Waste description and treatment/regulatory subcategory [1]	Regulated hazardous constituent		Wastewaters	Nonwastewaters
		Common name	CAS [2] number	Concentration in mg/L [3], or technology code [4]	Concentration in mg/kg [5] unless noted as "mg/L TCLP", or technology code
*	*	*	*	*	*
K176	Baghouse filters from the production of antimony oxide.	Antimony	7440–36–0	1.9	1.15 mg/L TCLP
		Arsenic	7440–38–2	1.4	5.0 mg/L TCLP
		Cadmium	7440–43–9	0.69	0.11 mg/L TCLP
		Lead	7439–92–1	0.69	0.75 mg/L TCLP
		Mercury	7439–97–6	0.15	0.025 mg/L TCLP
K177	Slag from the production of antimony oxide that is disposed of or speculatively accumulated.	Antimony	7440–36–0	1.9	1.15 mg/L TCLP
		Arsenic	7440–38–2	1.4	5.0 mg/L TCLP
		Lead	7439–92–1	0.60	0.75 mg/L TCLP
K178	Nonwastewaters from the production of titanium dioxide by the chloride-ilmenite process. [This listing does not apply to chloride process waste solids from titanium tetrachloride production exempt under section 261.4(b)(7).].	1,2,3,4,6,7,8-Heptachlorodibenzo-p-dioxin (1,2,3,4,6,7,8-HpCDD).	35822–39–4	0.000035 or CMBST[11]	0.0025 or CMBST[11]
		1,2,3,4,6,7,8-Heptachlorodibenzofuran (1,2,3,4,6,7,8-HpCDF).	67562–39–4	0.000035 or CMBST[11]	0.0025 or CMBST[11]
		1,2,3,4,7,8,9-Heptachlorodibenzofuran (1,2,3,4,7,8,9-HpCDF).	55673–89–7	0.000035 or CMBST[11]	0.0025 or CMBST[11]
		HxCDDs (All Hexachlorodibenzo-p-dioxins).	34465–46–8	0.000063 or CMBST[11]	0.001 or CMBST[11]
		HxCDFs (All Hexachlorodibenzofurans).	55684–94–1	0.000063 or CMBST[11]	0.001 or CMBST[11]
		1,2,3,4,6,7,8,9-Octachlorodibenzo-p-dioxin (OCDD).	3268–87–9	0.000063 or CMBST[11]	0.005 or CMBST[11]
		1,2,3,4,6,7,8,9-Octachlorodibenzofuran (OCDF).	39001–02–0	0.000063 or CMBST[11]	0.005 or CMBST[11]
		PeCDDs (All Pentachlorodibenzo-p-dioxins).	36088–22–9	0.000063 or CMBST[11]	0.001 or CMBST[11]
		PeCDFs (All Pentachlorodibenzofurans).	30402–15–4	0.000035 or CMBST[11]	0.001 or CMBST[11]
		TCDDs (All tetrachlorodibenzo-p-dioxins).	41903–57–5	0.000063 or CMBST[11]	0.001 or CMBST[11]
		TCDFs (All tetrachlorodibenzofurans).	55722–27–5	0.000063 or CMBST[11]	0.001 or CMBST[11]

TREATMENT STANDARDS FOR HAZARDOUS WASTES—Continued

[Note: NA means not applicable]

Waste code	Waste description and treatment/regulatory subcategory [1]	Regulated hazardous constituent		Wastewaters	Nonwastewaters
		Common name	CAS [2] number	Concentration in mg/L [3], or technology code [4]	Concentration in mg/kg [5] unless noted as "mg/L TCLP", or technology code
		Manganese	7439–96–5	17.1	3.6 mg/L TCLP
		Thallium	7440–28–0	1.4	0.20 mg/L TCLP
*	*	*	*	*	*

* * * * * * *

FOOTNOTES TO TREATMENT STANDARD TABLE 268.40

[1] The waste descriptions provided in this table do not replace waste descriptions in 40 CFR part 261. Descriptions of Treatment/Regulatory Subcategories are provided, as needed, to distinguish between applicability of different standards.

[2] CAS means Chemical Abstract Services. When the waste code and/or regulated constituents are described as a combination of a chemical with its salts and/or esters, the CAS number is given for the parent compound only.

[3] Concentration standards for wastewaters are expressed in mg/L and are based on analysis of composite samples.

[4] All treatment standards expressed as a Technology Code or combination of Technology Codes are explained in detail in 40 CFR 268.42 Table 1—Technology Codes and Descriptions of Technology-Based Standards.

[5] Except for Metals (EP or TCLP) and Cyanides (Total and Amenable) the nonwastewater treatment standards expressed as a concentration were established, in part, based upon incineration in units operated in accordance with the technical requirements of 40 CFR part 264, Subpart O or 40 CFR part 265, Subpart O, or based upon combustion in fuel substitution units operating in accordance with applicable technical requirements. A facility may comply with these treatment standards according to provisions in 40 CFR 268.40(d). All concentration standards for nonwastewaters are based on analysis of grab samples.

* * * * * * *

[11] For these wastes, the definition of CMBST is limited to: (1) combustion units operating under 40 CFR 266, (2) combustion units permitted under 40 CFR part 264, Subpart O, or (3) combustion units operating under 40 CFR 265, Subpart O, which have obtained a determination of equivalent treatment under 268.42(b).

11. In § 268.48, the Table is amended by adding in alphabetical order under the heading of "Inorganic Constituents" a new entry to read as follows: (The footnotes are republished without change.)

§ 268.48 Universal treatment standards.

* * * * *

UNIVERSAL TREATMENT STANDARDS

[Note: NA means not applicable]

Regulated Constituent common name	CAS [1] number	Wastewater standard	Nonwastewater standard
		Concentration in mg/l [2]	Concentration in mg/kg [3] unless noted as "mg/l TCLP'
* * * *	*	*	*
Inorganic Constituents			
* * * *	*	*	*
Manganese	7439–96–5	17.1	3.6 mg/l TCLP
* * * *	*	*	*

* * * * * * *

[1] CAS means Chemical Abstract Services. When the waste code and/or regulated constituents are described as a combination of a chemical with its salts and/or esters, the CAS number is given for the parent compound only.

[2] Concentration standards for wastewaters are expressed in mg/L and are based on analysis of composite samples.

[3] Except for Metals (EP or TCLP) and Cyanides (Total and Amenable) the nonwastewater treatment standards expressed as a concentration were established, in part, based upon incineration in units operated in accordance with the technical requirements of 40 CFR Part 264, Subpart O, or Part 265, Subpart O, or based upon combustion in fuel substitution units operating in accordance with applicable technical requirements. A facility may comply with these treatment standards according to provisions in 40 CFR 268.40(d). All concentration standards for nonwastewaters are based on analysis of grab samples.

* * * * *

PART 271—REQUIREMENTS FOR AUTHORIZATION OF STATE HAZARDOUS WASTE PROGRAMS

12. The authority citation for Part 271 continues to read as follows:

Authority: 42 U.S.C. 6905, 6912(a), and 6926.

13. Section 271.1(j) is amended by adding the following entries to Table 1 and Table 2 in chronological order by date of publication to read as follows.

§ 271.1 Purpose and scope.

* * * * *

(j) * * *

TABLE 1.—REGULATIONS IMPLEMENTING THE HAZARDOUS AND SOLID WASTE AMENDMENTS OF 1984

Promulgation date	Title of regulation	Federal Register reference	Effective date
* *	* *	* *	* *
[*insert date of signature of final rule*]	Listing of Hazardous Wastes K176, K177, and K178	[*insert Federal Register page numbers*]	[*insert effective date of final rule*]
* *	* *	* *	* *

TABLE 2.—SELF-IMPLEMENTING PROVISIONS OF THE SOLID WASTE AMENDMENTS OF 1984

Effective date	Self-implementing provision	RCRA citation	Federal Register reference
* *	* *	*	* *
[*effective date of final rule*].	Prohibition on land disposal of K176, K177, and K178 wastes, and prohibition on land disposal of radioactive waste mixed with K176, K177, and K178 wastes, including soil and debris.	3004(g)(4)(C) and 3004(m).	[*date of publication of final rule*] [*FR page numbers*].
* *	* *	*	* *

PART 302—DESIGNATION, REPORTABLE QUANTITIES, AND NOTIFICATION

14. The authority citation for Part 302 continues to read as follows:

Authority: 42 U.S.C. 9602, 9603, and 9604; 33 U.S.C. 1321 and 1361.

15. In § 302.4, Table 302.4 is amended by adding the following new entries in alphanumeric order at the end of the table to read as follows:

§ 302.4 Designation of hazardous substances

* * * * *

TABLE 302.4.—LIST OF HAZARDOUS SUBSTANCES AND REPORTABLE QUANTITIES

[Note: All Comments/Notes Are Located at the End of This Table]

Hazardous substance	CASRN	Regulatory synonyms	Statutory			Final RQ	
			RQ	Code †	RCRA Waste Number	Category	Pounds (Kg)
* * *		*	*		*		*
K176 ..... Baghouse filters from the production of antimony oxide.	.....	.....	*1	4	K176	X	1 (0.454)
K177 ..... Slag from the production of antimony oxide.	.....	.....	*1	4	K177	X	5,000 (2,270)
K178 ..... Nonwastewaters from the production of titanium dioxide by the chloride-ilmenite process. [This listing does not apply to chloride process waste solids from titanium tetrachloride production exempt under section 261.4(b)(7).].	.....	.....	*1	4	K178	X	#

† Indicates the statutory source as defined by 1, 2, 3, and 4 below.

* * * * * * *

4-Indicates that the statutory source for designation of this hazardous substance under CERCLA is RCRA Section 3001.

1* Indicates that the 1-pound RQ is a CERCLA statutory RQ.

The Agency may adjust the statutory RQ for this hazardous substance in a future rulemaking; until then the statutory RQ applies.

* * * * * * *

[FR Doc. 00–22810 Filed 9–13–00; 8:45 am]

BILLING CODE 6560–50–U

Federal Register

Thursday,
September 14, 2000

Part III

Department of Agriculture

Rural Housing Service
Rural Business-Cooperative Service
Rural Utilities Service
Farm Service Agency

7 CFR Part 1940
Environmental Policies and Procedures; Proposed Rule

DEPARTMENT OF AGRICULTURE

Rural Housing Service

Rural Business-Cooperative Service

Rural Utilities Service

Farm Service Agency

7 CFR Part 1940

RIN 0575–AB98

Environmental Policies and Procedures

AGENCIES: Rural Housing Service, Rural Business-Cooperative Service, Rural Utilities Service, and Farm Service Agency, USDA.

ACTION: Proposed rule.

SUMMARY: The Rural Housing Service (RHS) and the Rural Business-Cooperative Service (RBS) jointly propose to replace their current environmental regulation with a new environmental regulation, to implement the National Environmental Policy Act (NEPA), to comply with the Council on Environmental Quality (CEQ) Regulations for Implementing the Procedural Provisions of the National Environmental Policy Act, and to implement other environmental statutes and Executive Orders. This action is taken to improve both the efficiency and the effectiveness of the environmental review process for RHS and RBS, and to update that process, by reflecting the changes to agency programs and to the environmental laws, Executive Orders, and regulations applicable to those programs. This action represents an important contribution to the USDA's efforts to streamline its operations and realize more efficient use of staff time. Hereinafter, RHS and RBS are collectively referred to as the ''Agency.''

DATES: Written comments on this proposed rule must be received on or before November 13, 2000. The comment period for information collections under the Paperwork Reduction Act of 1995 continues through November 13, 2000.

ADDRESSES: Submit written comments via the U.S. Postal Service, in duplicate, to the Regulations and Paperwork Management Branch, Attention: Richard Gartman, Rural Development, U.S. Department of Agriculture, STOP 0742, 1400 Independence Avenue, SW., Washington, DC 20250–0742. Submit written comments via Federal Express Mail, in duplicate, to the Regulations and Paperwork Management Branch, Attention: Richard Gartman, USDA-Rural Development, 3rd Floor, 300 E. St., SW., Washington, DC 20546. Also, comments may be submitted via the Internet by addressing them to ''comments@rus.usda.gov'' and must contain the word ''Environmental'' in the subject line. All comments will be available for public inspection during regular work hours at the 300 E. St., SW. address listed above.

FOR FURTHER INFORMATION CONTACT: Susan Wieferich, Senior Environmental Protection Specialist, Technical Support Branch, Program Support Staff, Rural Housing Service, USDA, STOP 0761, 1400 Independence Ave. SW., Washington, D.C. 20250–0761, telephone (202) 720–9647.

SUPPLEMENTARY INFORMATION:

Classification

This proposed rule has been determined to be significant and has been reviewed by the Office of Management and Budget (OMB) under Executive Order 12866.

Programs Affected

The Catalog of Federal Domestic Assistance programs impacted by this action are as follows:

10.350—Technical Assistance to Cooperatives
10.405—Farm Labor Housing Loans and Grants
10.410—Very Low to Moderate Income Housing Loans
10.411—Rural Housing Site Loans and Self-Help Housing Land Development Loans
10.415—Rural Rental Housing Loans
10.417—Very Low-Income Housing Repair Loans and Grants
10.420—Rural Self-Help Housing Technical Assistance
10.427—Rural Rental Assistance Payments
10.433—Rural Housing Preservation Grants
10.438—Section 538 Rural Rental Housing Guaranteed Loans
10.441—Technical and Supervisory Assistance Grants
10.442—Housing Application Packaging Grants
10.766—Community Facilities Loans and Grants
10.767—Intermediary Relending Program
10.768—Business and Industry Loans
10.769—Rural Development Grants (RBEG) (TDG)
10.771—Rural Cooperative Development Grants (RTDG)
10.772—Empowerment Zones Program
10.773—Rural Business Opportunity Grants
10.854—Rural Economic Development Loans and Grants

Intergovernmental Consultation

Programs with Catalog of Federal Domestic Assistance numbers 10.405, 10.411, 10.415, 10.420, 10.427, 10.433, 10.438, 10.441, 10.442, 10.766, 10.767, 10.768, 10.769 10.771, 10.773, and 10.854 are subject to the provisions of Executive Order 12372, which requires intergovernmental consultation with State and local officials.

Programs with Catalog of Federal Domestic Assistance numbers 10.350, 10.410, 10.417, and 10.772 are excluded from the scope of Executive Order 12372.

Civil Justice Reform

This proposed rule has been reviewed under Executive Order 12988, Civil Justice Reform. If this proposed rule is adopted: (1) Unless otherwise specifically provided, all State and local laws and regulations that are in conflict with this rule will be preempted; (2) no retroactive effect will be given to this rule except as specifically provided in the rule; and (3) administrative proceedings of the National Appeals Division (7 CFR part 11) must be exhausted before litigation against the Department is instituted.

National Environmental Policy Act

The Agency has determined that this action does not constitute a major Federal action significantly affecting the quality of the human environment, and in accordance with the National Environmental Policy Act of 1969, Public Law 91–190, (42 U.S.C. 4321 *et seq.*) neither an Environmental Impact Statement nor an environmental assessment is required.

Environmental Justice

This rule is subject to the requirements of Executive Order 12898, Federal Actions to Address Environmental Justice in Minority Populations and Low-Income Populations. Implementation of these requirements will occur at the time of actions performed hereunder.

Unfunded Mandates Reform Act

Title II of the Unfunded Mandates Reform Act of 1995 (UMRA), establishes requirements for Federal agencies to assess the effects of their regulatory actions on State, local, and tribal governments and the private sector. Under section 202 of the UMRA, the Agencies generally must prepare a written statement, including a cost-benefit analysis, for proposed and final rules with ''Federal mandates'' that may result in expenditures to State, local, and tribal governments, in the aggregate, or to the private sector, of $100 million or more in any 1 year. When such a statement is needed for a rule, section 205 of the UMRA generally requires the Agencies to identify and consider a reasonable number of regulatory alternatives and adopt the least costly,

more cost-effective, or least burdensome alternative that achieves the objectives of the rule.

This rule contains no Federal mandates (under regulatory provisions of Title II of the UMRA) for State, local, and tribal governments or the private sector. Therefore, this rule is not subject to the requirements of sections 202 and 205 of the UMRA.

National Partnership for Reinventing Government

This regulatory action is being taken as part of the National Partnership for Reinventing Government program to eliminate unnecessary regulations and improve those that remain in force.

Executive Order 12866, Regulatory Planning and Review

This proposed rule is a significant regulatory action within the meaning of Executive Order 12866. This proposal is a cooperative effort between the Rural Housing Service and the Rural Business-Cooperative Service to improve Agency regulations, make more efficient use of Agency staff time, and improve delivery of Agency programs to the public.

We anticipate the economic impact of this proposed rule to be minimal since the costs associated with this rule are attributable to the existing environmental laws and Executive Orders the rule implements. This rule does not alter or impact the funding levels of Agency programs. This proposed rule is a means to simplify and reorganize the existing Agency environmental regulation. The proposed rule is designed to provide the Agency and Agency applicants with clear, precise directions for environmental compliance. The NEPA process has been streamlined without a sacrifice of environmental compliance. Environmental statutes and Executive Orders, which have been signed in to law or amended since the last update of the current regulation (1988), are incorporated into this rulemaking. Guidance is established on environmental risk management and the performance of due diligence in conjunction with the management of hazardous substances.

Regulatory Flexibility Act Certification

This proposed rule has been reviewed with regard to the requirements of the Regulatory Flexibility Act (5 U.S.C. 601 *et seq.*) which requires agencies to analyze regulatory options when the rule would have a significant economic impact on a substantial number of small entities. The undersigned has determined and certified by signature of this document that this rule will not have a significant economic impact on a substantial number of small entities. Applications for financial assistance under Agency programs are discretionary, therefore, regulatory requirements apply only to those entities which choose to apply for financial assistance.

Executive Order 13132, Federalism

This proposal has been reviewed for compliance with Executive Order 13132 on Federalism, and it has been determined that the regulation has no federalism implications, does not impose substantial direct compliance costs on State and local governments, and does not preempt State law.

Discussion of the Proposed Rule

The environmental regulation currently utilized by RHS and RBS (7 CFR part 1940, subpart G) was first published by the Farmers Home Administration (FmHA) on January 30, 1984. It has been updated once, on September 19, 1988. As part of the USDA reorganization effort, FmHA ceased to exist on October 20, 1994. RHS and RBS are successor agencies to FmHA. The current rule implements the requirements of NEPA, CEQ's regulations for implementing NEPA, and several other environmental laws, regulations, and Executive Orders.

This proposed rule, 7 CFR part 1940, subpart S, will replace 7 CFR part 1940, subpart G, for RHS and RBS. It represents an important contribution to USDA's efforts to streamline its operations, thereby realizing more efficient use of staff time and improving customer service. Procedures are simplified. Readability is improved. The regulation's subject matter is expanded to encompass new and changed environmental laws, regulations, and Executive Orders, including guidance on the management of hazardous substances. This proposed rule provides rules applicable to applicants and their business transactions with the Agency. Detailed procedures and instructions which affect Agency personnel and internal practice will be in an Agency field manual which will be available in each Agency office. Conforming changes to 7 CFR part 1940, subpart G, and other regulations will be included in the final rule.

In 1994, a year-long, broad-ranging task force investigated options for improving both the efficiency and the effectiveness of the process resulting in numerous ideas, many of which have been incorporated into this proposed rule. The Agency is aware that its efforts to ''streamline'' the environmental review process might be construed as an attempt on its part to weaken the process, therefore, a conscious effort has been made to ensure that the environmental review process remains sound and effective. In fact, in some respects, such as the area of public involvement, the review process will actually be strengthened.

Highlights of the major changes in this proposed rule are:

1. Based on fifteen years experience dealing with the current regulations, the full range of Agency actions has been examined for possible reclassification. As a result, environmental action thresholds have been raised in certain instances. This proposed rule has more categorical exclusions and Class I actions, and fewer Class II actions, than the current environmental regulation. Both Class I and Class II actions require an environmental assessment. However, a Class I assessment requires less documentation than a Class II assessment. The Class I assessment is a combination checklist and narrative statement; the Class II assessment is a fully narrative statement. Reclassification will reduce paperwork and conserve the time spent by Agency staff preparing environmental assessments by allowing the staff to focus on the environmental issues that are most important.

2. The public notice process has been reinforced and simplified when a Class I or Class II environmental assessment is involved. Previously, the Agency has been criticized for notice procedures which some have characterized as insufficient or not providing for adequate or timely public involvement. This proposed rule requires a notice be published stating that the draft environmental assessment is available for public review and comment. The public comment period for this notice is 21 calendar days for a Class I assessment and 30 calendar days for a Class II assessment. At the end of this comment period, if no substantive changes are made to the assessment as a result of comments received, a Finding of No Significant Impact (FONSI) will be published, without a public comment period, and the assessment is complete. If substantive changes are made to the assessment as a result of comments received, the notice of availability of the draft assessment will be republished with a 15 calendar day comment period to allow time for public review and comment on the changes. Assuming no further substantive changes are necessary, this republication will be followed by publication of the FONSI, without a public comment period, and the assessment is complete. This process facilitates the preparation of

good draft assessments and provides the public with adequate information about the proposed action and sufficient time for comment if it so desires.

This new public notice process also means that actions which are normally categorically excluded, but require an environmental assessment due to some special aspect the of specific proposal in question, will require public notice. The only exception to this public notice requirement are certain actions listed as categorical exclusions involving single family housing, which the Agency has determined would unduly burden the applicant and be environmentally de minimus.

3. There are unique environmental policies and procedures, specific to certain Agency programs and activities, which are currently scattered in various loan making and loan servicing regulations. These unique environmental requirements are updated and relocated to the new proposed rule for easier reference and implementation. This consolidation includes environmental procedures applicable to intermediary or third-party type loan and grant programs, as well as the environmental requirements applicable to acquisition, management, and disposition of real property owned by the Agency.

4. The proposed rule addresses a wide range of unmet needs. Direction is provided on new or amended environmental statutes and Executive Orders, including, but not limited to, the Native American Graves and Repatriation Act of 1990, the amendments to the National Historic Preservation Act of 1992, and the 1994 Executive Order 12898, ''Federal Actions to Address Environmental Justice in Minority Populations and Low-income Populations.'' Clarification is provided in numerous areas, including, definitions, applicant responsibilities, the classification process, the timing of the NEPA review process relative to loan making and loan servicing decision points, and amendments to and adoption of existing assessments.

5. This proposed rule establishes an environmental risk management program for incorporation into Agency lending practices, and regulates issues relating to the release of hazardous substances or petroleum products, pursuant to the Comprehensive Environmental Response, Compensation, and Liability Act (CERCLA), Resource Conservation and Recovery Act (RCRA), and related statutes.

6. This rule prescribes requirements concerning lead-based paint on residential and nonresidential structures proposed for financial assistance.

7. This rule prescribes requirements concerning indoor air pollutants.

Paperwork Reduction Act

In accordance with the Paperwork Reduction Act of 1995, the Agency will seek Office of Management and Budget (OMB) approval of the reporting and recordkeeping requirements contained in this proposed regulation.

Title: Environmental Policies and Procedures.

Type of Request: New Information Collection.

Abstract: The National Environmental Policy Act requires Federal agencies to consider the potential environmental impacts of actions proposed for Agency financial assistance. To comply with the Act, it is necessary for the Agency to have information on the types of environmental resources on site or in the vicinity that might be impacted by the proposed action, as well as information on the nature of the project selected by the applicant (the activities to be carried out by the applicant at the site; any air, liquid, and solid wastes to be produced by these activities, etc.) The applicant is the only logical source for much of this information. In fact, a majority of Federal agencies which assist non-Federal applicants in sponsoring projects require these applicants to submit environmental data.

Estimate of Burden: Public reporting burden for this collection of information is estimated to average 4.95 hours per response.

Respondents: Individuals; State, local and tribal governments; businesses; and non-profit institutions.

Estimated Number of Respondents: 1201.

Estimated Number of Responses per Respondent: 3.48.

Estimated Number of Responses: 4181.

Estimated Total Annual Burden on Respondents: 20,700.

Copies of this information collection can be obtained from Barbara Williams, Regulations and Paperwork Management Branch, Support Services Division, Rural Housing Service, USDA, Stop 0742, 1400 Independence Avenue SW., Washington, DC 20250–0742, telephone (202) 692–0045.

Comments are invited on: (a) Whether the proposed collection of information is necessary for the proper performance of the functions of the Agency, including whether the information will have practical utility; (b) the accuracy of the Agency's estimate of the burden of the proposed collection of information, including the validity of the methodology and assumptions used; (c) ways to enhance the quality, utility, and clarity of the information to be collected; and (d) ways to minimize the burden of the collection of information on those who are to respond, including through the use of appropriate automated, electronic, mechanical, or other technological collection techniques or other forms of information technology.

All responses to this notice will be summarized, included in the request for OMB approval, and will become a matter of public record. Comments should be submitted to the Desk Officer for Agriculture, Office of Information and Regulatory Affairs, Office of Management and Budget, Washington, DC 20503, and to Barbara Williams, Regulations and Paperwork Management Branch, Support Services Division, Rural Housing Service, USDA, Stop 0742, 1400 Independence Avenue SW., Washington, DC 20250–0742. A comment is best assured of having its full effect if OMB receives it within 30 days of publication of this rule.

List of Subjects in 7 CFR Part 1940

Endangered and threatened wildlife, Environmental protection, Flood plains, National wild and scenic river system, Natural resources, recreation, Water supply.

Accordingly, chapter XVIII, title 7, Code of Federal Regulations is proposed to be amended as follows:

PART 1940—GENERAL

1. The authority citation for part 1940 continues to read as follows:

Authority: 5 U.S.C. 301; 7 U.S.C. 1989; 42 U.S.C. 1480.

2. Subpart S is added part 1940 to read as follows:

Subpart S—Environmental Policies and Procedures

Sec.

1940.901 General.
1940.902 Authority.
1940.903 Objectives.
1940.904 Definitions.
1940.905 Agency environmental responsibilities.
1940.906 Applicant environmental responsibilities.
1940.907 General environmental standards.
1940.908 Special environmental standards.
1940.909 [Reserved].
1940.910 Integration of the environmental review process with the Agency decision-making process (timing).
1940.911 Public involvement.
1940.912 Classification of Agency actions.

1940.913 Categorical exclusions.
1940.914 Class I actions.
1940.915 Class II actions.
1940.916 Environmental impact statement actions.
1940.917–1940.920 [Reserved]
1940.921 Third party preparation of Class II environmental assessments.
1940.922 Modifications to environmental documents.
1940.923 Preparation of an environmental impact statement.
1940.924 Record of decision.
1940.925 Use of completed final environmental impact statement.
1940.926 Supplements to environmental impact statements.
1940.927–1940.930 [Reserved]
1940.931 State and local environmental procedures.
1940.932–1940.933 [Reserved]
1940.934 Adoption.
1940.935 Intermediary financial assistance programs.
1940.936 [Reserved]
1940.937 Management, lease, and disposition of Agency-owned property.
1940.938 Emergencies.
1940.939–1940.940 [Reserved]
1940.941 Environmental risk management.
1940.942 Lead-based paints.
1940.943 Indoor air pollutants.
1940.944–1940.948 [Reserved]
1940.949 Appeals.
1940.950 [Reserved]

Subpart S—Environmental Policies and Procedures

§ 1940.901 General.

This subpart contains the environmental policies and procedures of the Rural Housing Service (RHS) and the Rural Business-Cooperative Service (RBS). Hereinafter, RHS and RBS are collectively referred to as the Agency. This subpart implements the environmental requirements of a series of Federal laws, regulations, and Executive Orders, and integrates these environmental requirements with Agency planning and decisionmaking processes. Agency actions covered by this subpart include, but are not limited to:

(a) All forms of Agency financial assistance, including loans, grants, and guarantees;

(b) Servicing actions, including, transfers, assumptions, subordinations and parity issues, partial releases, and the management, leasing, and sale of inventory property;

(c) Agency approval or concurrence of guaranteed lender activities, when such approval or concurrence is required by program regulations; and

(d)[Reserved]

§ 1940.902 Authority.

(a) This subpart derives its authority from and is intended to be consistent with:

(1) The National Environmental Policy Act of 1969 (NEPA) (42 U.S.C. 4321 *et seq.*);

(2) Council on Environmental Quality (CEQ), Regulations for Implementing the Procedural Provisions of the National Environmental Policy Act, (40 CFR parts 1500–1508), and

(3) U.S. Department of Agriculture, National Environmental Policy Act Policies and Procedures (7 CFR parts 1b–1c).

(b) The CEQ regulations will not be repeated in this subpart except when essential for clarification of important procedural or substantive points. Otherwise, citations to applicable parts of the CEQ regulations will be provided.

(c) This subpart is designed to integrate NEPA requirements with the planning, environmental review and consultation procedures required by other laws or by Agency rules and practice. Application of this subpart results in a single comprehensive environmental review document for each proposed action which provides one reference point for the Agency's compliance with applicable environmental laws, regulations, and Executive Orders, including but not limited to:

(1) Archaeological and Historic Preservation Act (16 U.S.C. 469 *et seq.*);

(2) Archaeological Resources Protection Act of 1979 (16 U.S.C. 470aa *et seq.*);

(3) Clean Air Act (42 U.S.C. 7401 *et seq.*);

(4) Clean Water Act (33 U.S.C. 1251 *et seq.*);

(5) Coastal Barrier Improvement Act (42 U.S.C. 4028);

(6) Coastal Barrier Resources Act (16 U.S.C. 3501 *et seq.*);

(7) Coastal Zone Management Act—section 307(c)(1) and (2), (16 U.S.C. 1456);

(8) Consolidated Farm and Rural Development Act, section 363 (7 U.S.C. 2006e)

(9) Endangered Species Act of 1973 (16 U.S.C. 1531 *et seq.*);

(10) Farmland Protection Policy Act (7 U.S.C. 4201 *et seq.*);

(11) Fish and Wildlife Coordination Act (16 U.S.C. 661 *et seq.*);

(12) Food Security Act, title XII, subtitle B, Highly Erodible Land Conservation and subtitle C, Wetland Conservation, (16 U.S.C. 3801 *et seq.*);

(13) Historic Sites, Buildings and Antiquities Act (16 U.S.C. 461 *et seq.*);

(14) National Environmental Policy Act (42 U.S.C. 4321 *et seq.*);

(15) National Historic Preservation Act (16 U.S.C. 470 *et seq.*);

(16) National Trails System Act (16 U.S.C. 1241 *et seq.*);

(17) Native American Graves and Repatriation Act (25 U.S.C. 3001 *et seq.*);

(18) Noise Control Act (42 U.S.C. 4901 *et seq.*);

(19) Pollution Prevention Act of 1990 (Pub. L. 101–508, § 6601 *et seq.*);

(20) Safe Drinking Water Act—section 1424(e), (42 U.S.C. 300h);

(21) Wild and Scenic Rivers Act (16 U.S.C. 1271 *et seq.*);

(22) Wilderness Act (16 U.S.C. 1131 *et seq.*);

(23) Executive Order 11514, Protection and Enhancement of Environmental Quality (3 CFR, 1966–1970 Comp., p. 902);

(24) Executive Order 11593, Protection and Enhancement of the Cultural Environment (3 CFR, 1971–1975 Comp., p. 559);

(25) Executive Order 11988, Floodplain Management (3 CFR, 1977);

(26) Executive Order 11990, Protection of Wetlands (3 CFR, 1977);

(27) Executive Order 12898, Federal Actions to Address Environmental Justice in Minority Populations and Low Income Populations (3 CFR, 1994 Comp., p. 859);

(28) Department of Agriculture, National Environmental Policy Act, Final Policies and Procedures (7 CFR, subtitle A, part 1b)

(29) Department of Agriculture, Enhancement, Protection and Management of the Cultural Environment (7 CFR, subtitle B, chapter XXXI, parts 3100–3199)

(30) Agriculture Departmental Regulation (DR) 5600–2, Environmental Justice

(31) Agriculture Departmental Regulation (DR) 9500–3, Land Use Policy

(32) Agriculture Departmental Regulation (DR) 9500–4, Fish and Wildlife Policy

(33) Other statutes as listed in 7 CFR § § 1940.941(a) and 1940.942(a)

§ 1940.903 Objectives.

This subpart, with the exception of §§ 1940.941–1940.943, is designed to implement the requirements of the National Environmental Policy Act, the purpose of which is to ensure that federal agencies make decisions that are based on an understanding of the environmental consequences, and take actions that protect, restore, and enhance the environment (40 CFR § 1500.1).

(a)–(b) [Reserved]

(c) The Agency will involve the applicant, the public, other Federal agencies, Indian Tribes, State and local governments, low income and minority populations, organizations, and

interested and affected persons in the planning and environmental review process. To accomplish this objective, the Agency will:

(1) Inform the applicant of the Agency's environmental policies and procedures, especially as they pertain to the applicant's proposal;

(2) Ensure that designated Agency staff are available to advise potential applicants of environmental studies or other information foreseeably required for later federal action;

(3) Include provisions in the environmental review process which provide opportunity for the public to express their views or concerns about proposed Agency actions; and

(4) Make environmental documents available to the public for review and comment as early as possible in the decisionmaking process and before decisions are made by the Agency.

(d) [Reserved]

§ 1940.904 Definitions.

Refer to the Table of Contents for the appropriate section for definitions applicable to the management of hazardous substances, lead-based paint, and indoor air pollution.

Action. Any act the Agency takes or proposes to take that is subject to NEPA requirements, as described in § 1940.901 (40 CFR § 1508.18).

Agency. When used with a capital ''A'' in this subpart, refers collectively to the Rural Housing Service (RHS) and the Rural Business-Cooperative Service (RBS), agencies within the Rural Development mission area, United States Department of Agriculture.

Animal unit. A unit of measurement for any animal feeding operation calculated by adding the following numbers: the number of slaughter and feeder cattle multiplied by 1.0, plus the number of mature dairy cattle multiplied by 1.4, plus the number of swine weighing over 25 kilograms (approximately 55 pounds) multiplied by 0.4, plus the number of sheep multiplied by 0.1, plus the number of horses multiplied by 2.0.

Applicant. To be interpreted broadly. Refers to the individual or entity requesting or benefiting from federal assistance, including federal financial assistance. Includes, but is not limited to: applicants for direct and guaranteed loans or grants, guaranteed lenders, lenders' clients, intermediaries, third parties, borrowers and grantees, as appropriate.

Approval official. Agency employee with program authority to approve the request for federal action.

Categorical exclusion (CATEX). An action which generally does not, individually or cumulatively, have a significant effect on the quality of the human environment and, therefore, is generally exempt from the NEPA requirement to prepare an environmental assessment or an environmental impact statement. However, such an action is NOT exempt from the requirements of other environmental laws, regulations, and Executive Orders. The ''Categorical Exclusion Checklist'' is used to determine compliance with these other requirements. Depending on the results of the ''Checklist,'' an environmental assessment may be required.

CATEX. Categorical exclusion.

CEQ. Council on Environmental Quality.

Cold water aquatic animal. In relation to an aquatic animal production or processing facility, includes, but is not limited to, the Salmonidae family of fish; *e.g.*, trout and salmon.

Commitment of resources. As used in this subpart, ''commitment of resources'' is to be interpreted broadly. Refers to the Agency's decision to agree to or participate in a proposed action. A commitment of resources is represented by, but is not limited to: loan approval, grant approval, obligation of funds, a conditional commitment for guarantee, a conditional commitment for construction, a letter of conditions, a letter authorizing interim financing, and Agency consent to or approval of a servicing request.

Connected (related) actions. Actions which are closely related and must therefore be evaluated in the same environmental review document (40 CFR § 1508.25). Actions are connected if they:

(1) Automatically trigger other actions which may require an environmental review;

(2) Cannot or will not proceed unless other actions are taken previously or simultaneously; or

(3) Are interdependent parts of a larger action and depend on the larger action for their justification.

Council on Environmental Quality (CEQ). An agency established within the Executive Office of the President by the National Environmental Policy Act of 1969 with additional responsibilities provided by the Environmental Quality Act of 1970; author of the National Environmental Policy Act implementing regulations (40 CFR parts 1500–1508); responsible for providing advice and guidance on NEPA issues pursuant to 40 CFR parts 1500–1508; and approves agency NEPA procedures.

Critical action. An action which, if located or carried out within a floodplain, poses a greater than normal risk for flood-caused loss of life or property. Critical actions include, but are not limited to, those actions which create or extend the useful life of facilities which:

(1) Produce, use, or store highly volatile, flammable, explosive, toxic or water reactive material;

(2) Are likely to contain occupants who may not be sufficiently mobile and require assistance to avoid loss of life or injury during flood and storm events (except single family housing);

(3) Contain emergency operation centers that need to be operative during flood and storm events; or

(4) House irreplaceable artifacts or difficult to replace records of community life and business.

Cumulative impact. The impact on the environment which results from the incremental impact of an action when added to other past, present, and reasonably foreseeable future actions, regardless of what agency (Federal or non-Federal) or person undertakes such other actions. Cumulative impacts can result from individually minor, but collectively significant, actions taking place over a period of time.

Data collection form. The ''Request for Environmental Information'' or equivalent document, available in any Rural Development office, used to collect environmental information from the applicant or from others.

Direct effect. An effect that is caused by an action and occurs at the same time and place.

Draft EA. Draft environmental assessment.

Draft environmental assessment (Draft EA). An environmental assessment in draft form, ready for public review and comment under the public notice procedures of this subpart. A draft environmental assessment reflects the results of appropriate consultation, and if applicable, an examination of alternatives and proposed mitigation. Refer also to environmental assessment.

EA. Environmental assessment.

Effect. As used in this subpart, the term is synonymous with ''impact.''

Emergency circumstance. An event or collection of factors or circumstances which involve an immediate or imminent danger to public health or safety.

Environmental assessment (EA). A public document which provides sufficient information and analysis for the Agency to determine whether to prepare an environmental impact statement or a finding of no significant impact. This subpart recognizes Class I and Class II environmental assessments. The Agency is fully responsible for the

scope and contents of all environmental assessments prepared or adopted in accordance with this subpart.

Environmental document. Refers collectively to the Agency forms, documents, and all supporting material necessary to demonstrate Agency compliance with the National Environmental Policy Act and other applicable environmental laws, regulations, and Executive Orders for a proposed action.

''Environmental Policies and Procedures''. A manual, not published in the **Federal Register**, but available in any Rural Development office, which contains, in addition to this published rule (applicable to applicants and their business transactions with the Agency), detailed procedures and instructions applicable to Agency personnel for the implementation of this subpart.

Environmental review. The environmental analysis required by the National Environmental Policy Act and by this subpart. There are three basic levels of environmental review or analysis: categorical exclusion, environmental assessment, and environmental impact statement. The term can refer to any one of the levels of environmental review or it can be used collectively, referring to all three.

Finding of No Significant Impact (FONSI). A decision document, signed by the Agency approval official, in which the official states that based on the Class I or Class II environmental assessment prepared for a proposed action, the action will not have a significant effect on the human environment, and therefore an environmental impact statement will not be prepared. A completed environmental assessment includes the FONSI.

Floodplain. The area subject to inundation from a 100 year flood, unless a critical action is involved, in which case the floodplain of concern is the area subject to a 500 year flood.

(1) 100-year (base) flood. A flood having a 1.0-percent probability of being equaled or exceeded in any given year, as defined by the Federal Emergency Management Agency.

(2) 500-year (critical action) flood. A flood having 0.2-percent probability of being equaled or exceeded in any given year, as defined in the Floodplain Management Guidelines for Implementing Executive Order 11988.

FONSI. Finding of No Significant Impact.

Important land resources. The land uses or resources identified and defined in the United States Department of Agriculture, Departmental Regulation 9500–3, Land Use Policy: important farmland, floodplains, wetlands, prime forestland, and prime rangeland. This Departmental Regulation is available in any Rural Development office.

Indirect effect. An effect caused by an action that is later in time or removed in distance from the action, but is still reasonably foreseeable. Indirect effects may include growth inducing impacts and other effects related to induced changes in the pattern of land use, population density or growth rate, and related effects on air and water and other natural systems, including ecosystems.

Intermediary. Under certain programs, the Agency may provide financial assistance to one entity, which in turn redistributes that financial assistance to one or more other entities. These entities are called by a variety of names depending on the program. For consistency, this subpart will apply the term ''intermediary'' to the entity which receives the financial assistance directly from the Agency.

Mitigation. A measure or action, normally required of the applicant and contained in the environmental document, which is specially designed to avoid, minimize, rectify, reduce, or compensate for the potential adverse environmental impacts of a proposed action. It also includes the concept of the no-action alternative.

National Environmental Policy Act (NEPA). Established a national environmental policy which mandates procedures to ensure that federal agencies make decisions based on an understanding of the environmental consequences and take actions which protect, restore, and enhance the environment. Also established the Council on Environmental Quality.

NEPA. National Environmental Policy Act.

No-action alternative. The alternative of not approving the request for federal action in order to avoid an environmental effect.

Reasonable alternative. An alternative action that is reasonable and capable of being achieved considering relevant constraints. The test of practicability depends upon the characteristics of the alternative under consideration and the constraints that may be imposed on it by environmental, economic, legal, social and technological parameters. This test is not limited by the temporary unavailability of sufficient financial resources to implement an alternative. Neither may an alternative be rejected from consideration as reasonable solely on the basis of moderately increased costs. The minimum range of alternatives that must be analyzed to determine if a reasonable alternative exists includes the following three categories of alternatives:

(1) Alternative project sites or designs,

(2) Alternative projects with similar benefits as the proposed action, and

(3) The no-action alternative.

Preparer. The individual who is responsible for completing the environmental review. The preparer is an Agency official unless otherwise specified by this subpart.

Rural Development Office. Any local U.S.D.A. office which handles Rural Housing Service or Rural Business-Cooperative Service assistance.

Scope and scoping. Scope consists of the range of actions, alternatives, and impacts to be considered by the Agency. Scoping refers to an early and public process for determining the scope of issues to be addressed in the environmental review and for identifying the significant issues related to a proposed action.

Similar actions. Actions, which when viewed with other reasonably foreseeable or proposed Agency actions, have points in common, such as common timing or geography, that provide a basis for evaluating their environmental consequences together in the same environmental review document.

State Environmental Coordinator. The one Agency official responsible for environmental duties within the jurisdiction of a Rural Development State office, who is the primary point of contact for information and assistance on environmental issues involving the Agency, for both Agency personnel and the public, including other Federal agencies, Indian Tribes, State and local governments, low income and minority populations, organizations, and interested or affected persons.

Third party. Any entity which receives assistance from an intermediary. Third parties are only considered applicants for the purposes of this subpart when the assistance to the third party is provided by the intermediary using Agency funds.

Warm water aquatic animal. In relation to an aquatic animal production or processing facility, includes, but is not limited to, the Ameiuride, Centrachidae, and Cyprinidae families of fish; *e.g.*, respectively, catfish, sunfish, and minnows.

Water resource project. Any type of construction which would result in either impacts on water quality and the beneficial uses that water quality criteria are designed to protect, or any change in the free-flowing characteristics of a particular river or stream to include physical, chemical, and biological characteristics of the

waterway. This definition encompasses construction projects within and along the banks of rivers or streams, and projects involving withdrawals from, and discharges into such rivers or streams. Projects which require Corps of Engineers dredge and fill permits are water resource projects.

§ 1940.905 Agency environmental responsibilities.

All Agency personnel are responsible for compliance with this subpart. The environmental responsibilities for key Agency positions are outlined below. Applicants with environmental questions should contact the Agency program representative with whom they filed the application. General inquiries from the public and other Federal, State, or local governments should be addressed to the most appropriate individual listed below:

(a) *Administrator.* The Administrator for each Agency has direct responsibility for Agency compliance with all environmental laws, regulations, and Executive Orders applicable to Agency programs and administrative actions. The Administrator ensures that this responsibility is delegated to appropriate Agency staff and remains informed on the general status of Agency compliance, and the need for any necessary improvements.

(b) *State Director.* This individual ensures compliance with the requirements of this subpart within a specific area of jurisdiction; nominates one individual to serve as State Environmental Coordinator and a second individual to serve as Assistant State Environmental Coordinator (these may be full-time or collateral duty assignments); and ensures the development and maintenance of a State Natural Resource Management Guide.

(c) *State Environmental Coordinator.* This individual is the Agency's NEPA liaison and acts as an advisor to the State Director and program staff on environmental issues, provides the leadership and technical expertise for State-wide implementation of this subpart, and is a point of contact for public inquiries on environmental issues involving the Agency. The concurrence and signature of the State Environmental Coordinator is required for all Class I and Class II environmental assessments, prior to issuance of the Finding of No Significant Impact, and for all Environmental Impact Statements, prior to issuance of the Record of Decision; this assures the Agency of quality control in compliance with this subpart.

(d) *Program Director, Rural Development Manager, and Community Development Manager.* These individuals are responsible for ensuring that applicants are informed of Agency environmental requirements and for preparing the appropriate level of environmental review in compliance with the requirements of this subpart for all program actions within their jurisdiction and authority.

§ 1940.906 Applicant environmental responsibilities.

To comply with the environmental laws, regulations, and Executive Orders applicable to Agency program and administrative actions, the Agency requires the full cooperation of applicants and may require applicants to assume certain environmental responsibilities, such as the collection of environmental information or the drafting of proposed environmental documents. All environmental decisions will be made by the Agency. If the Agency is unable to fulfill the environmental requirements for a specific proposed action, further consideration of the application will be deferred until compliance can be achieved.

(a) Applicants will consider the potential environmental impacts of their proposals at the earliest planning stages to develop proposals that minimize the potential for adverse environmental impacts.

(b) Once the decision to pursue Agency assistance has been made, prospective applicants will promptly contact an Agency official to determine what environmental requirements may apply to their proposals and what environmental responsibilities applicants may need to fulfill.

(c) Applicants will provide the Agency, at the earliest possible date, with the identity of any other Federal or State agency which may be involved in financing the proposal, so the Agency may work with that agency to minimize duplication of effort and to achieve a coordinated and timely response to environmental issues.

(d) Normally an Agency official will prepare the environmental document. However, to do so, the Agency will require certain information from the applicant. The applicant may need to hire professional environmental consultants to gather or prepare this information for the Agency.

(e) A data collection form, either the ''Request for Environmental Information'' or an equivalent form (available in any Rural Development office), will be used for gathering environmental information from applicants whose proposals require a Class I or Class II environmental assessment under this subpart. Depending on the environmental issues specific to a proposed action, the Agency may request information in addition to that required by ''Request for Environmental Information.'' Use of a data collection form for categorical exclusions is optional.

(f) Applicants, particularly those with proposals which may have environmental impacts, must review the State Natural Resource Management Guide, as it may assist them in a better understanding of environmental requirements that apply to their proposal. The Guide is available for public review in any Rural Development office. Applicants will be provided with a copy of the Guide, or pertinent portions, upon request.

(g) Applicants will ensure that all required information is current, sufficiently detailed and complete, and is submitted directly to the Agency official processing their request. Timely submission of accurate and complete environmental information will facilitate prompt Agency action on their request.

(h) During the period of application review and processing, applicants will not intentionally take any actions (for example, initiation of construction), including incurring any obligations with respect to their proposed undertaking, which would have an adverse effect on the environment or which would limit the range of alternative actions which could be considered for mitigation measures under the environmental review process. Satisfactory completion of the environmental review process must occur before any Agency decision or commitment of Agency resources on the proposed action. Applicants may develop preliminary plans or designs or perform other work necessary to support an application for Federal, State, or local permits or assistance. However, the development of detailed plans and specifications is discouraged when the costs involved inhibit the realistic consideration of alternative proposals or mitigation measures.

(i) As applicable, applicants will be required to cooperate with and assist the Agency and any cooperating agency in public involvement, including but not limited to, participating in public meetings, and publishing notices to invite public comment and review of the proposed action, its potential environmental impacts, possible alternatives, and proposed mitigation measures.

(j) Applicants must fulfill the requirements imposed on the proposed

action by other Federal, State, and local agencies with regulatory jurisdiction.

(k) Applicants will promptly notify the Agency official processing their request when changes are made to a proposed action, when public comments are received about the action, or when new or changed information relating to the action's potential environmental effects is received.

§ 1940.907 General environmental standards.

All applicant proposals are subject to the following standards. Applicants must understand and cooperate with the Agency in the application of these standards and, at the Agency's discretion, will assist the Agency by providing any information or assistance necessary to achieve these standards, including participation in the consultation processes and in the development of alternatives and mitigation.

(a) Environmental quality will be considered co-equally with economic, social, and other relevant factors in project development and in Agency decisionmaking relative to the application.

(b) The performance of environmental reviews, including the consideration of alternatives, will be initiated as early as possible in the preapplication or application process. The applicant is required to respond promptly to Agency requests for information and assistance. This will place the Agency in the most flexible and objective position to effectively and fully consider environmental effects and to complete the environmental review process in a timely manner.

(c) The Agency, assisted by the applicant, will include early consultation with the public, including appropriate Federal agencies, Indian tribes, State and local governments, low income and minority populations, organizations, and interested and affected persons, as part of its assessment of the potential impacts of proposed actions.

(d) When adverse environmental impacts of a proposed action are identified (direct, indirect, or cumulative), the applicant will, at the Agency's request, recommend alternative courses of action for Agency review and provide any additional information needed. In choosing a reasonable alternative with the least adverse environmental impact, the Agency will examine the alternative courses of action, including the no-action alternative, and will analyze the potential environmental impacts of both the proposed action and the alternatives.

(e) If no reasonable alternative exists, including the no-action alternative, the applicant will, at the Agency's request, recommend reasonable measures to mitigate the identified adverse environmental impacts. The Agency will consider the applicant's recommendation, but will not be bound by it in reaching its decision on the mitigation measures that will be required under the completed environmental review.

§ 1940.908 Special environmental standards.

All applicant proposals are subject to the following standards.

(a) *Coastal barrier resources.* As required by the Coastal Barrier Resources Act and the Coastal Barrier Improvement Act, the Agency will not authorize, fund, or carry out any action, if that action would either be located within the Coastal Barrier Resources System (CBRS) or would directly or indirectly affect the CBRS, unless:

(1) Such activity meets the criteria for an exception, as defined in section 6 of the Coastal Barrier Resources Act, and

(2) Consultation regarding the proposed action has been completed with the Secretary of the Interior.

(b) *Coastal zone management areas.* As required by the Coastal Zone Management Act, the Agency will ensure that Federally assisted activities which directly affect the coastal zone management area will be conducted to the maximum extent practicable in a manner consistent with the States' federally-approved coastal zone management program.

(c) *Endangered and threatened species and critical habitat.* Pursuant to the Endangered Species Act, the Agency will not authorize, fund, or carry out any proposal or project that is likely to:

(1) Jeopardize the continued existence of any plant or wildlife species designated as a listed or proposed endangered or threatened species by the Secretary of Interior or Secretary of Commerce; or

(2) Destroy or adversely modify the habitats of listed or proposed species when such habitats have been determined critical to the species' existence by either the Secretary of Interior or Secretary of Commerce, unless the Agency has been granted an exemption for such proposal by the Endangered Species Committee pursuant to section 7(h) of the Endangered Species Act.

(d) *Historic and archaeological resources.* Pursuant to the National Historic Preservation Act, the Agency will:

(1) Take into account the effect of Agency undertakings, in accordance with 36 CFR part 800, on any district, site, building, structure, or object that is included in or eligible for inclusion in the National Register of Historic Places, which includes National Historic Landmarks; and

(2) Ensure that the historic preservation responsibilities of section 110 of the Act are fully integrated into Agency planning and decision-making processes.

(e) *Important land resources.* (1) As required by Departmental Regulation 9500–3, the Farmland Protection Policy Act, and Executive Orders 11988 and 11990, the Agency will not approve or fund any proposed actions involving important farmland, prime rangeland, prime forestland, floodplains, and wetlands that, as a result of their identifiable impacts, direct or indirect, would lead to or accommodate either the conversion of these land uses or encroachment upon them. The only exception to this policy is if the Agency approval official determines that the following conditions are first met:

(i) There is no reasonable alternative to the proposed action;

(ii) The proposal includes all reasonable measures for reducing the adverse impacts and the amount of conversion or encroachment; and

(iii) The proposal conforms to the following planning and siting criteria:

(A) The project is not inconsistent with any existing comprehensive plan that guides community growth and reflects a realistic strategy for protecting natural resources;

(B) The project is compatible, to the extent practicable, with any existing State, unit of local government, and private programs and policies to protect farmland; and

(C) The project will encourage long-term, economically viable public investment by fostering development patterns that ensure compact community development.

(2) Pursuant to section 363 of the Consolidated Farm and Rural Development Act, the Agency will not approve any financial assistance (loan or grant) under such act to drain, dredge, fill, level, or otherwise manipulate a wetland, or to engage in any activity that results in impairing or reducing the flow, circulation, or reach of water, except for financial assistance for the maintenance of previously converted wetlands (wetlands converted prior to December 23, 1985). Section 363 does not apply to loans for a utility line.

(3) Sections 1211 and 1221 of the Food Security Act of 1985 (16 U.S.C. 3811 and 3821) requires that loans made, insured, or guaranteed under the Consolidated Farm and Rural Development Act cannot be used for a purpose that will contribute to:

(i) Excessive erosion of highly erodible land;

(ii) The conversion of a wetland after December 23, 1985, to produce an agricultural commodity; or

(iii) The conversion of a wetland after November 28, 1990, either to produce an agricultural commodity or to make the production of an agricultural commodity possible.

(f) *National Natural Landmarks.* Pursuant to the Historic Sites, Buildings and Antiquities Act, the Agency will not provide financial assistance for any activity which will be incompatible with or result in substantial interference with the unique properties of landmarks listed on the National Registry of Natural Landmarks.

(g) *National scenic, historic, and recreation trails.* In accordance with the National Trails System Act, the Agency will not provide financial assistance for any activity which will be incompatible with or result in substantial interference with the nature and purposes of trails designated by Congress as National Scenic, Historic, or Recreation Trails.

(h) *Native American human remains and cultural items.* Pursuant to the Native American Graves and Repatriation Act, the Agency recognizes the rights of lineal descendants and members of Indian tribes and Native Hawaiian organizations to certain Native American human remains and cultural items with which they are affiliated. The Agency will identify and make appropriate disposition of human remains, cultural items, funerary objects, sacred objects, and objects of cultural patrimony that are:

(1) In Agency possession or control;

(2) In the possession or control of an institution or State or local government receiving Agency funds; or

(3) Excavated or discovered on Agency-owned lands or on tribal lands which are the subject of Agency financial assistance.

(i) *Noise.* Pursuant to the Noise Control Act, the Agency will administer its programs to reduce noise pollution and the potential for noise to impact both the environment and Agency financed projects. The Agency will take positive steps to protect the surrounding environment from excessive noise levels generated by Agency financed projects, and will take steps to protect Agency financed projects from excessive noise levels generated by the surrounding environment. The U.S. Department of Housing and Urban Development standards (24 CFR part 51, subpart B) will be used for the purpose of assessing noise impacts and determining the acceptability of sites in terms of their exposure to noise.

(j) [Reserved]

(k) *Water.* The Agency will not provide financial assistance for any activity that:

(1) Pursuant to section 303(c) of the Clean Water Act, would either impair a State water quality standard, including designated and existing beneficial uses that water quality criteria are designed to protect or that would not meet antidegradation requirements; or

(2) Pursuant to section 1424(e) of the Safe Drinking Water Act, the Environmental Protection Agency Administrator has determined may contaminate a designated sole source aquifer to the extent that a significant hazard to public health is created.

(l) [Reserved]

(m) *Wild and scenic rivers.* Pursuant to the Wild and Scenic Rivers Act, the Agency will consult with the appropriate river-administering agencies and will:

(1) Not provide financial assistance or plan approval for any water resource project that would have a direct and adverse effect on the values for which a river has been either included in the National Wild and Scenic Rivers System or is designated for study and potential addition to the System by Congress;

(2) Not approve or assist any development (commercial, industrial, residential, farming, or community facilities) located below or above a wild, scenic, or recreational river area, or on any stream tributary thereto, which will invade the area or unreasonably diminish the scenic, recreational, and fish and wildlife values present in the area; and

(3) Will take all reasonable measures to avoid impacting rivers or river segments which the National Park Service has identified as potentially eligible for inclusion in the System and has listed in the Nationwide Rivers Inventory, or, if avoidance is not possible, to mitigate adverse impacts.

(n) *Wilderness areas.* In accordance with the Wilderness Act, the Agency will not provide financial assistance for any activity which will be incompatible with or result in substantial interference with the nature and purposes of areas designated or proposed for designation to the National Wilderness Preservation System.

§ 1940.909 [Reserved]

§ 1940.910 Integration of the environmental review process with the Agency decision-making process (timing).

NEPA requires the Agency to use the completed environmental document as a planning tool to help the Agency and the applicant make decisions that are based on an understanding of the environmental consequences of the proposed action and to take actions that protect, restore, and enhance the environment. Thus, the environmental review process must be completed before the Agency's decision on whether or not to participate in or agree to a proposed action.

(a) [Reserved]

(b) *Applicant responsibilities.* The Agency will initiate the appropriate level of environmental review and the collection of environmental information as early as possible in the planning and decision-making process with assistance in information gathering by the applicant. The full cooperation of the applicant is required. Completion of the ''Request for Environmental Information'' for proposed actions listed as categorical exclusions under § 1940.913 is optional. For all proposed actions requiring a Class I or Class II environmental assessment (§§ 1940.914 and 1940.915), the applicant will:

(1) Complete the ''Request for Environmental Information'' or an equivalent document as early as practical, but no later than:

(i) When the Agency issues a notice inviting an applicant to file a full application, or

(ii) If such a notice is not applicable, when the Agency receives an application from the applicant; and

(2) The applicant will not take any actions (construction, in particular) or incur any obligations during the environmental review process which would either limit the range of alternatives to be considered or which would have an adverse effect on the environment.

(c) [Reserved]

(d) *Completion of the environmental review.* The environmental review will be considered complete when the appropriate environmental document has been properly executed, when all applicable public notices have been published, the associated public comment periods have expired, and the Agency has taken any necessary actions to address the comments received.

(e) *Agency decision on proposed action.* Environmental review and consideration will occur concurrently with all other considerations, forming the basis for the Agency's decision on

the proposed action. The environmental review will be completed before loan approval, obligation of funds, or other commitment of Agency resources, whichever occurs first, for all programs; and before the Agency decision on any servicing action which is subject to the provisions of this subpart. Agency resources will not be committed until the environmental review is completed.

(f)–(g) [Reserved]

§ 1940.911 Public involvement.

(a) [Reserved]

(b) *General.* (1) This section integrates the public involvement and public notice requirements from a series of environmental laws, regulations, and Executive Orders applicable to Agency program and administrative actions, and comprises the minimum public involvement and public notice requirements for the Agency and the applicant. Additional meetings, notices, or other mechanisms may be used to achieve an adequate level of public involvement when the Agency determines that conditions or circumstances, such as public interest or controversy, make it appropriate to do so. For additional guidance on public involvement when preparing environmental impact statements, refer to § 1940.923.

(2) Applicants will consult with the Agency in the early planning stages of their proposal on applicable public involvement requirements.

(3) All public comments will be fully considered in the development and completion of the environmental document.

(4) The public notice requirements of paragraphs (c), (d), and (e) of this section are not applicable to single family housing actions referenced in § 1940.913(a)(1)(i), (ii), (iv), and (vi), even when such actions trigger an environmental assessment under this subpart.

(c) *Public notices for environmental assessments.* Environmental assessments, prepared in accordance with this subpart, are subject to the following public notice requirements:

(1) Notice of draft environmental assessment (draft EA).

(i) A notice of draft EA will be published for all Class I and Class II actions. The notice will state that a draft EA is available for public review and comment and explain how a copy may be obtained for review. The notice will briefly describe the proposed action, and if applicable, potential direct and indirect impacts, possible alternatives, and mitigation.

(ii) The public review and comment period will be a minimum of 21 calendar days from the final date of publication of the notice of draft EA for Class I actions and 30 days for Class II actions.

(iii) If no comments or other information are received during the comment period, or if the Agency determines that the comments or other information received result in only minor changes to the draft EA and that an environmental impact statement is not required, the Agency may make the changes to the draft EA and proceed to the finding of no significant impact. Minor changes are confined to the following Agency responses:

(A) Making factual corrections, such as corrections to names, addresses, dates.

(B) Explaining why the comments or other information received do not warrant further Agency response, citing the sources, authorities, or reasons which support the Agency's position and, if appropriate, indicating those circumstances which would trigger Agency reappraisal or further response.

(iv) If the Agency determines that public comments or other information received necessitate substantive changes to the draft EA, the Agency must decide whether these substantive issues can be adequately addressed and, if necessary, mitigated within the constraints of an EA, or whether an environmental impact statement is needed. Substantive changes include, but are not limited to, the following Agency responses:

(A) Modifying alternatives, including the proposed action, and mitigation measures.

(B) Developing and evaluating alternatives, including mitigation measures, not previously given serious consideration by the Agency.

(C) Supplementing, improving, or modifying Agency environmental analyses.

(v) If a determination is made to proceed with an EA, the changes will be made and the notice of amended draft EA will then be republished, in the same manner as before, for a minimum of 15 calendar days. The notice of the amended draft EA will briefly describe the substantive changes to the draft EA, invite the public to review and comment on those changes, and explain how a copy may be obtained for review.

(2) Notice of the FONSI.

(i) The Agency approval official will complete, date and sign the FONSI and append it to the draft EA only when the requirements of 1940.911(c)(1)(i)–(v) have been met.

(ii) A notice of FONSI will be published with no public comment period. Upon publication of this notice, the environmental assessment will be considered complete. The Agency will take no action with respect to its decision on the proposed action until the notice of FONSI has been published.

(d) *Actual notice to affected property owners.* (1) A good-faith effort to notify all property owners potentially affected by a proposed action and offer them an opportunity to review and comment on the action will be made. At the request of the Agency, applicants will identify potentially affected property owners and will mail or otherwise deliver to each owner a copy of all appropriate public notices. If identification of all affected property owners cannot be achieved with a reasonable effort, the applicant, with the approval of the Agency, may replace or supplement individual copies of public notices with limited mass mailings, radio broadcasts, or some other combination of public announcements.

(2) If property owners are mailed or otherwise delivered an individual copy of the notice of draft EA, these property owners need not be sent individual copies of the notice of FONSI, if:

(i) The mitigation measures contained in the FONSI are unchanged from those outlined in the notice of draft EA,

(ii) The property owners did not raise objections or concerns about the draft EA, and

(iii) The scope of the proposed action has not changed.

(e) *Publication and distribution of notices.* (1) After the Agency writes the public notice and provides explicit directions to the applicant on publishing and distributing the notice, the applicant will mail or otherwise deliver copies of the notice to the individuals or entities identified by the Agency to receive the notice and to the list of affected property owners compiled by applicant. The applicant will submit to the Agency an affidavit of publication from each newspaper and a list of all parties who were mailed an individual copy of the notice.

(2) All public notices will be published by the applicant for at least 3 consecutive days in a daily newspaper or for 2 consecutive publications in a non-daily newspaper, with the exception of the notice of FONSI. The notice of FONSI will be published only once. The applicant will choose, with the concurrence of the Agency, a newspaper of general circulation in the vicinity of the proposed action or any local or community oriented newspaper, provided the newspaper circulation covers the proposed action's area of environmental impact. The notice will be published in easily readable type in the classified (nonlegal) section of the newspaper. If the affected area is largely

non-English speaking or bilingual, the notice will also be published in the primary non-English language newspaper serving the area.

(3) Individual copies of the notice will be sent by the applicant (at the same time the notice is published in the newspaper) to:

(i) The appropriate regional EPA office;

(ii) State and regional review agencies established under Executive Order 12372;

(iii) The State Historic Preservation Officer;

(iv) State or Federal agencies planning to provide financial assistance to this or related actions or required to review permit applications for this action;

(v) Any potentially affected Indian Tribe;

(vi) Any individuals, groups, and local, State, and Federal agencies known to be interested in the project or who have requested that they be kept informed;

(vii) Affected property owners that have been identified; and

(viii) Any other interested parties, including low income and minority populations, that the Agency has identified.

(4) All costs associated with publication and distribution, including development of a list of affected property owners, if required, will be borne by the applicant.

(f) *Public information meetings.* (1) A public information meeting will be held near the project site to discuss and receive comments on the proposed action, when:

(i) There may be substantial environmental controversy concerning the proposed action; or

(ii) A meeting is requested by another Federal, State, or local government agency with jurisdiction over the action and the request is supported by reasons why such a meeting will be helpful.

(2) If the Agency determines that a public information meeting is necessary, attendance and participation by the applicant is mandatory. When requested by the Agency, applicant will organize the meeting, procure a meeting place, publish a notice of the meeting inviting the public to attend, present information on the proposal at the meeting, and fulfill related activities.

(g) *Public access to environmental documents.* The Agency will make environmental documents, the published notices and comments received, and any supporting material available to the public pursuant to the provisions of the Freedom of Information Act, without regard to the exclusion for interagency memoranda where such memoranda transmit comments of federal agencies on the environmental impact of the proposed action. For specific projects, interested parties can request this material from the State Director or the Freedom of Information Coordinator located in each Rural Development field office. Requests for documents of a more general nature can be addressed to the Freedom of Information Officer, at the Rural Development National office in Washington, DC.

(1) Applicants will be given a complete copy of the environmental review for their proposal without cost.

(2) Environmental documents to be made available to the public will be provided to the public without charge to the extent practicable, or at a fee which is not more than the actual cost of reproducing copies required to be sent to other federal agencies, including CEQ.

(3) Environmental documents which are voluminous or contain hard to reproduce maps and similar items will be made available for viewing at one or more locations convenient to the public, such as a Rural Development field office or public library, in lieu of providing copies of such documents to the public.

(h) [Reserved]

§ 1940.912 Classification of Agency actions.

(a) *CEQ requirements.* CEQ regulations (part 1507.3) require Federal agencies to classify potential actions into three categories:

(1) Actions which normally do not require either environmental impact statements or environmental assessments (such actions are referred to as categorical exclusions);

(2) Actions which normally require environmental assessments, but not necessarily environmental impact statements; and

(3) Actions which normally require environmental impact statements.

(b) *Classification of Agency actions.* The classification of Agency actions into categories provides both the Agency and the applicant with a preselected starting point for beginning the environmental review process. Each category of action and the corresponding level of environmental review is briefly described as follows:

(1) *Categorical exclusion actions.* These are actions which do not, individually or cumulatively, have a significant effect on the quality of the human environment and, therefore, are exempt from the NEPA requirement to prepare an environmental assessment or environmental impact statement. However, such actions are NOT exempt from the requirements of other environmental laws and the Agency and the applicant must take steps to ensure compliance with such laws:

(i) Specifically, CEQ regulations (part 1508.4) require the Agency to provide a mechanism for identifying when extraordinary circumstances exist. That is, the Agency must provide a mechanism for identifying when an action that is normally categorically excluded under NEPA has the potential for a significant effect on the human environment.

(ii) The mechanism chosen by the Agency is a categorical exclusion checklist which documents whether or not an extraordinary circumstance exists and the applicability of other environmental laws, regulations, and Executive Orders to the specific proposal in question. An extraordinary circumstance exists when the proposed action has the potential to impact resources protected by law, regulation, or Executive Order, is controversial for environmental reasons, or is a segment or phase of a larger action, which, when considered as a whole, would not qualify as a categorical exclusion.

(2) Class I and Class II environmental assessment actions. For the purposes of implementing NEPA, these actions are presumed to be major Federal actions, as defined in CEQ regulations (part 1508.18). These actions require the completion of an environmental assessment to determine if the specific proposal in question has the potential for a significant impact on the human environment. Class I actions typically have less potential for significant impacts than Class II actions. As a result, the environmental assessment prepared for a Class I action is less detailed than the assessment prepared for a Class II action.

(3) *Environmental impact statement actions.* These are Agency actions that have the potential for a significant impact on the quality of the human environment and require the completion of an environmental impact statement.

(c) *Raising the level of environmental review.* (1) The completed level of environmental review for a specific action will not be less than what is required by the classification of that action in this subpart.

(2) Environmental conditions, public controversy, and other characteristics unique to a specific action can trigger the need for a higher level of environmental review, despite what the Agency classification of that action in this subpart indicates is necessary. That is, the presence of an extraordinary circumstance can trigger a more detailed environmental review for an action

classified as a categorical exclusion; an action classified as a Class I action can be raised to a Class II level if there is a potential to impact more than one resource, etc.; and both Class I and Class II actions can be raised to an environmental impact statement level, if the potential for significant impacts is evident. In all cases, if the proposed action represents one of several phases of a larger project, or one segment of a larger project being funded by other entities, the Agency will complete the appropriate level of environmental review for the entire project.

(3) If it is clear that an action requires the preparation of a higher level of review than what is called for by the classification of that action in this subpart, the Agency and the applicant will proceed directly to the preparation of the higher review.

(4) Any questions about the appropriate level of environmental review for a specific action will be referred by the Agency official or the applicant to the State Environmental Coordinator, who will consult with the National Office environmental staff, as necessary.

§ 1940.913 Categorical exclusions.

Below is a list of Agency actions normally classified as categorical exclusions.

(a) *Housing actions.* (1) Financial assistance for:

(i) The construction of a single family unit (dwelling) or an addition to an existing single family unit.

(ii) The approval of an individual building lot.

(iii) The construction of a new multiple unit housing project or the expansion of an existing multiple unit housing project, when the completed project will be confined to a single site not to exceed one acre and will have no more than:

(A) Four units without public water and sewer; or

(B) Ten units with public water and sewer.

(iv) The purchase, rehabilitation, replacement on-site, or renovation of any existing housing units.

(v) The development of a subdivision, including land purchase for a subdivision, site development for a subdivision, or planning or technical assistance supporting or leading to subdivision development, when the completed subdivision will have no more than four lots and is not a segment or phase of a larger subdivision.

(vi) The expansion of a multiple unit housing project previously approved by the Agency, or financial assistance for single family housing construction on a lot in a subdivision previously approved by the Agency, provided that:

(A) The action is consistent with all previously adopted requirements for the multiple unit housing project or subdivision in question, and

(B) The Agency environmental review that was previously completed for the original application is still current with respect to applicable environmental requirements and conditions present at the site, and it assessed the lots or expansion for which approval is being requested.

(2) Preapproval of a subdivision, as required by program regulations, when the completed subdivision will have no more than four lots and is not a segment or phase of a larger subdivision.

(b) *Business and essential community facility actions.* Financial assistance for:

(1) An existing facility, when:

(i) New construction will not be involved;

(ii) There will be no large increases in employment;

(iii) There will be no increase in the production of gaseous, liquid, or solid wastes and no change in the type or content of such wastes;

(iv) The production, handling, treatment, and disposal practices for gaseous, liquid, or solid wastes comply with applicable Federal, State, and local regulations, and there is no history of violations;

(v) It is not a facility that presently or previously produced or stored hazardous wastes or disposed of hazardous wastes on the facility's property; and

(vi) None of the following are involved: Gaseous, liquid, or solid substances or wastes that are classified as hazardous, toxic (poisonous), radioactive, odorous, or medical waste.

(2) Construction of a new facility devoted solely to fire and rescue, or the expansion of such a facility, when the completed structure is limited to a building not exceeding one story and three bays and contains no additional capacity for emergency shelter or other purposes.

(3) A proposal for the purchase, renovation, replacement, restoration, or combination thereof, of an existing facility, on the original site, with minimal change in use, size, capacity, purpose, operation, or design from the original facility, including but not limited to: Replacement in-kind of utility lines, reconstruction of curbs and sidewalks, street repaving, and building modifications, renovations, and improvements.

(4) A proposal for the purchase, renovation, replacement, restoration, or combination thereof, of an existing overnight facility (for example, an assisted living facility, group home, dormitory, detention facility, nursing home, or hospital) on the original site, with minimal change in use, size, capacity, purpose, operation, or design from the original facility and no expansion in the number of beds (or rooms, if the facility is a hotel).

(5) The purchase and installation of office equipment, public safety equipment, or motor vehicles.

(6) Equipment purchase, renovation, replacement, restoration, or combination thereof, necessary to the operation of an existing facility, provided there are no connected (related) actions, which, when considered together, would require a higher level of environmental review.

(7) The purchase of stock (an ownership interest) in a business.

(8) Short term working capital to support day-to-day operating expenses.

(9) Refinancing of debt, provided the loan approval official certifies:

(i) That there is no evidence the applicant is using refinancing as a means of avoiding compliance with the environmental requirements of this subpart; and

(ii) If new construction or renovations are involved, that the construction was completed prior to the filing of the request for financial assistance; and

(iii) That the facility is currently in compliance or will be brought into compliance by means of the financial assistance requested with all applicable federal, state, and local standards.

(c) *Agricultural actions.* Financial assistance for:

(1) The purchase of an existing farm, or an enlargement to an existing farm, provided no shifts in land use are proposed beyond the limits stated in paragraphs (c)(9), (10), and (11) of this section.

(2) The purchase of livestock and essential farm equipment, including crop storing and drying equipment, provided such equipment is not to be used to accommodate shifts in land use beyond the limits stated in paragraphs (c)(9), (10), and (11) of this section.

(3) Construction of essential farm service buildings, and repairs and improvements to them.

(4) Construction of private, on-site water facilities, such as a drilled well for a homeowner.

(5) Installation or enlargement of irrigation facilities, including storage reservoirs, diversion dams, wells, pumping plants, canals, pipelines, and sprinklers designed to irrigate less than 80 acres.

(6) Replacement or restoration only of irrigation facilities, to include those

facilities described in paragraph (c)(5) of this section, with minimal change in use, size, capacity, or location from the original facility. The facility to be replaced or restored must have been used for similar irrigation purposes at least two out of the last three consecutive growing seasons, otherwise, the action will be viewed as an installation of irrigation facilities.

(7) Development of farm ponds or lakes of no more than 5 acres.

(8) Conversion of land in agricultural production to pastures or forests, or conversion of pastures to forests.

(9) Conversion of no more than 160 acres of pasture to agricultural production.

(d) *General categorical exclusion actions.* (1) Loan-closing and servicing activities, including but not limited to, appraisals, transfers, assumptions, subordinations, partial releases, consent to additional indebtedness, approval of the use of reserve funds, construction management activities, and minor amendments or revisions to approved projects (such as the provision of additional financial assistance for cost overruns), provided such activities do not alter the purpose, operation, location, or design of the project as originally approved.

(2) The lease or disposal of real property owned by the Agency when the transaction is either not controversial for environmental reasons or when there is no planned change in use of the real property within the reasonably foreseeable future.

(3) Financial assistance for technical or planning assistance, provided:

(i) The technical or planning assistance is not attached to an imminent action which separately would not qualify for a categorical exclusion; and

(ii) Applicants consider and document in their plans:

(A) The existing environmental quality and the important environmental factors within the planning area; and

(B) The potential environmental impacts on the planning area of the plan, and the potential impacts of the alternative planning strategies that were reviewed.

(4) Project management actions, relating to invitation for bids, contract award, and notice to proceed.

(5) The issuance of regulations and instructions, and amendments to them, describing administrative and financial procedures for processing, approving, and implementing the Agency's financial assistance programs.

(6) Procurement activities for goods and services, routine facility operations, and other such management activities related to the operation of the Agency, provided such actions are in compliance with the applicable Executive Orders:

(i) Executive Order 13134, Developing and Promoting Biobased Products and Bioenergy;

(ii) Executive Order 13123, Greening the Government through Efficient Energy Management;

(iii) Executive Order 13101, Greening the Government through Waste Prevention, Recycling, and Federal Acquisition;

(iv) Executive Order 13031, Federal Alternative Fueled Vehicle Leadership;

(v) Executive Order 12969, Federal Acquisition and Community-Right-to-Know;

(vi) Executive Order 12856, Federal Complinace with Right-to-Know Laws and Pollution Prevention Requirements;

(vii) Executive Order 12843, Procurement Requirements and Policies for Federal Agencies for Ozone-Depleting Substances;

(viii) Presidential Memorandum, April 26, 1994, Memorandum on Environmentally Beneficial Landscaping.

(7) Personnel actions, including reduction in force or employee transfers resulting from workload adjustments, reduced personnel or funding levels, skill imbalances, or other similar circumstances.

§ 1940.914 Class I actions.

Below is a list of Agency actions normally classified as Class I actions.

(a) *Housing actions.* Financial assistance for:

(1) The construction of a new multiple unit housing project or the expansion of an existing multiple unit housing project, when the completed project will be confined to a single site not to exceed five acres and will have:

(i) At least five units, but no more than twenty-five units, without public water and sewer; or

(ii) At least eleven units, but no more than fifty units, with public water and sewer.

(2) The development of a subdivision, including land purchase for a subdivision, site development for a subdivision, or planning or technical assistance supporting or leading to the development of a subdivision, when the completed subdivision will have at least five lots, but no more than twenty-five lots and is not a segment or phase of a larger subdivision.

(3) A proposal from an intermediary (proposed grantee) under the Housing Preservation Grant Program.

(4) Preapproval of a subdivision, as required by program regulations, when the completed subdivision will have at least five lots, but no more than twenty-five lots and is not a segment or phase of a larger subdivision.

(b) *Business and essential community facility actions.* Financial assistance for:

(1) Construction of a new facility or the expansion of an existing facility, when the completed facility meets all of the conditions listed below. The completed facility:

(i) Will be confined to a single site not exceeding five acres;

(ii) Will utilize both public water and sewer;

(iii) Will not be a source of substantially increased traffic generation or substantial increases in employment;

(iv) Will not produce substantial amounts of gaseous, liquid or solid wastes; is in compliance with applicable Federal, State, and local regulations governing the production, handling, treatment, and disposal of such wastes; and has no history of violations; and

(v) Will not produce substantial amounts of infectious, medical, biological, or special medical wastes (including radiological waste of medical origin); is in compliance with applicable Federal, State, and local regulations governing the production, handling, treatment, and disposal of such wastes; and has no history of violations;

(vi) Produces or will produce minimal amounts of gaseous, liquid or solid substance or waste that is classified as hazardous, toxic, radioactive, or odorous; is in compliance with applicable Federal, State, and local regulations governing the production, handling, treatment, and disposal of such wastes; and has no history of violations; and

(vii) Produces none of the following:

(A) A liquid waste that cannot be accepted by a publicly owned treatment works without first receiving pretreatment;

(B) A liquid waste discharge that is a point source subject to a Federal or State discharge permit; or

(C) Gaseous waste or air pollutant that will be emitted from a new source at a rate greater than one hundred tons per year or from an expanded source at a rate greater than twenty-five tons per year.

(2) Construction of a new, not to exceed, 50 bed (or 50 room if a hotel or motel) overnight facility (for example, an assisted living facility, group home, dormitory, detention facility, nursing home, or hospital) or a not to exceed 50 bed (or 50 room if a hotel or motel) expansion to such a facility, when the completed facility meets all of the conditions of paragraph (b)(1) of this section.

(3) Construction of a new utility system, or an expansion of an existing utility system, such as a water, sewer, or natural gas facility, that meets all of the following criteria:

(i) There will not be a substantial increase in the discharge to or in the withdrawal from surface or ground waters, requiring a new or amended discharge or withdrawal permit;

(ii) There will not be a relocation of the discharge to or the withdrawal from surface or ground waters, requiring a new or amended discharge or withdrawal permit;

(iii) There will not be a new discharge to or a new withdrawal from surface or ground waters, requiring the total design capacity of the completed discharge or withdrawal facility to exceed 50,000 gallons per day (withdrawal calculated by pumping the source on an 8 hour basis);

(iv) There will not be extension, enlargement, or construction of interceptors, collection, transmission, or distribution lines beyond a one-mile limit estimated from the closest point of:

(A) The boundary formed by the corporate limits of the community being served; or

(B) If there are developed areas immediately contiguous to the corporate limits of a community, the boundary formed by the limits of these developed areas; or

(C) If an unincorporated area is to be served, the boundary formed by the limits of the developed areas.

(v) The proposed facility is designed for predominantly residential use with other new or expanded users being small-scale, commercial enterprises having limited secondary environmental impacts; and

(vi) For a proposed expansion of a sewage treatment, water supply, or natural gas distribution facility, such expansion would serve a population that is no more than 20 percent greater than the population currently being served.

(4) Construction or extension of publicly owned and maintained streets and sidewalks, including related structures such as curbs, gutters, and storm drains.

(5) The repair, rehabilitation, or restoration of water control, flood control, or water impoundment facilities, such as dams, dikes, levees, detention reservoirs, and drainage ditches, with minimal change in use, size, capacity, or location from the original facility, and provided that all applicable federal, state, and local permits are obtained and complied with.

(c) *Agricultural actions.* Financial assistance for:

(1) The installation or enlargement of irrigation facilities including storage reservoirs, diversion dams, wells, pumping plants, canals, pipelines, and sprinklers designed to irrigate at least 80 acres, but no more than 160 acres.

(2) The development of farm ponds or lakes of more than five acres, but no more than ten acres.

(3) Land-clearing operations, including clear cut tree harvesting, of no more than 25 acres, provided all applicable federal, state, and local permits are obtained, and provided the operation is consistent with the recommendations of the State Forester and any enforceable community plans which guide growth and reflect a realistic strategy for protecting natural resources.

(4) Tree harvesting, involving no more than 50 acres, provided a forest stewardship plan or forest management plan, which includes best management practices, is approved by the State Forester, and all applicable federal, state, and local permits are obtained.

(5) The construction of energy producing facilities designed for a single farm's on-farm needs, such as methane digestors and fuel alcohol production facilities.

(6) The conversion of more than 160 acres of pasture to agricultural production, but no more than 320 acres.

(7) Use of a farm or portion of a farm for commercial recreational purposes or nonfarm enterprises utilizing no more than ten acres.

(d) *General Class I actions.* (1) Any proposed action which qualifies as a categorical exclusion under this subpart, but which is controversial for environmental reasons.

(2) Loan-closing and servicing activities, including but not limited to, transfers, assumptions, subordinations, partial releases, consent to additional indebtedness, approval of use of reserve funds, and amendments and revisions to all approved actions (such as the provision of additional financial assistance for cost-overruns), listed either as Class I actions in this section or equivalent in size or type to a Class I action and that alter the purpose, operation, location or design of the project as originally approved.

(3) The lease or disposal of real property owned by the Agency, which meets either of the following criteria:

(i) The lease or disposal is controversial for environmental reasons; or

(ii) The lease or disposal will result in a change in use of the real property in the reasonably foreseeable future.

(4) Technical assistance, when the assistance qualifies as a connected (related) action, and the project as a whole is equivalent in size or type to a Class I action as defined in this subpart.

§ 1940.915 Class II actions.

Agency actions, normally classified as Class II actions, are actions which either exceed the limitations established for Class I actions, as described in § 1940.914, or are listed below:

(a) Financial assistance for:

(1) An applicant who will act as an intermediary and provide financial assistance to one or more third parties, either directly or by means of a revolving loan fund, except for financial assistance through the Housing Preservation Grant Program, as required in § 1940.914(a)(3).

(2) An animal feeding operation, which does not meet the most recent Environmental Protection Agency criteria for a concentrated animal feeding operation, further described in 1940.916(a).

(3) A hatchery, fish farm, or other facility containing, growing, or holding aquatic animals, which does not meet the most recent Environmental Protection Agency criteria for a concentrated aquatic animal production facility, further described in 1940.916(b).

(4) A processing facility, including, but not limited to, facilities for processing crops, animals, or aquatic animals, provided that all applicable federal, state, and local permits are obtained and complied with. When considering such proposed actions, the Agency must be particularly attentive to the potential for indirect and cumulative impacts. If direct, indirect, and cumulative impacts cannot be adequately mitigated within the constraints of the Class II EA, an environmental impact statement must be completed. Animals and aquatic animals are further described in § 1940.916(a) and (b), respectively.

(5) The construction, expansion, or replacement on-site, of water control, flood control, or water impoundment facilities, such as dams, dikes, levees, detention reservoirs, and drainage ditches, to include stream channeling, provided that all applicable federal, state, and local permits are obtained and complied with. When considering such proposed actions, the Agency must be particularly attentive to the potential impacts to the resources listed below. If impacts to these resources cannot be adequately mitigated within the constraints of the Class II EA, an environmental impact statement must be completed:

(i) A State water quality standard,

(ii) A property listed or eligible for listing on the National Register of Historic Places,

(iii) A river or portion of a river included in or designated for potential addition to the Wild and Scenic Rivers System,

(iv) An endangered or threatened species or critical habitat, or

(v) A wetland.

(6) Land-clearing operations, including clear cut tree harvesting, of no more than 50 acres, provided all applicable federal, state, and local permits are obtained, and provided the operation is consistent with the recommendations of the State Forester and any enforceable community plans which guide growth and reflect a realistic strategy for protecting natural resources.

(7) Tree harvesting, involving no more than 100 acres, provided a forest stewardship plan or forest management plan, which includes best management practices, is approved by the State Forester, and all applicable federal, state, and local permits are obtained.

(b) The approval of plans and State Investment Strategies for Energy Impacted Areas, designated under section 601 Energy Impacted Area Development Assistance Program, and the applications for financial assistance (excluding the award of planning funds) for Energy Impact Areas.

(c) Any proposed action which qualifies as a Class I action under this subpart, but is controversial for environmental reasons.

(d) Loan-closing and servicing activities, including but not limited to, transfers, assumptions, subordinations, partial releases, consent to additional indebtedness, approval of use of reserve funds, and amendments and revisions to all approved actions (such as the provision of additional financial assistance for cost-overruns), listed either as Class II actions in this section or equivalent in size or type to a Class II action and that alter the purpose, operation, location, or design of the project as originally approved.

(e) Agency proposals for legislation as defined in CEQ's regulations (40 CFR § 1508.17).

(f) The issuance of regulations and instructions, as well as amendments thereto, that describe either the entities, proposals and activities eligible for financial assistance, or the manner in which such proposals and activities must be located, constructed, or implemented.

§ 1940.916 Environmental impact statement actions.

An environmental impact statement will be completed for any Class I or Class II action that is determined to have a significant impact on the quality of the human environment. If it is clear that an action requires an environmental impact statement, the Agency will proceed directly to the preparation of the environmental impact statement without prior completion of an assessment. The criteria for determining significant impacts are contained in the CEQ regulations (40 CFR § 1508.27). Agency actions which require an environmental impact statement are listed below:

(a) An animal feeding operation which meets the most recent Environmental Protection Agency criteria for a concentrated animal feeding operation. At the time of publication of this subpart, an animal feeding operation is considered a concentrated animal feeding operation by the Environmental Protection Agency, if it meets either of the following criteria:

(1) The numbers of animals confined are more than the numbers specified in any of the following categories: 1000 slaughter and feeder cattle; 700 mature dairy cattle (whether milked or dry cows); 2,500 swine each weighing over 25 kilograms (approximately 55 pounds); 500 horses; 10,000 sheep or lambs; 55,000 turkeys; 100,000 laying hens or broilers (if the facility has continuous overflow watering); 30,000 laying hens or broilers (if the facility has liquid manure handling system); 5000 ducks; or 1000 animal units; *or*

(2) The numbers of animals confined are more than the numbers specified in any of the following categories: 300 slaughter or feeder cattle; 200 mature dairy cattle (whether milked or dry cows); 750 swine each weighing over 25 kilograms (approximately 55 pounds); 150 horses; 3,000 sheep or lambs; 16,500 turkeys; 30,000 laying hens or broilers (if the facility has continuous overflow watering); 9,000 laying hens or broilers (if the facility has liquid manure handling system); 1500 ducks; or 300 animal units; and either one of the following conditions are met:

(i) Pollutants are discharged into navigable waters through a man-made ditch, flushing system or other similar man-made device (man-made means constructed by man and used for the purpose of transporting wastes); or

(ii) Pollutants are discharged directly into the waters of the United States which originate outside of and pass over, across, or through the facility or otherwise come into direct contact with the animals confined in the operation.

(3) Provided, however, that no animal feeding operation is a concentrated animal feeding operation as defined in § 1940.916(b)(1) and (2) above, if such animal feeding operation discharges only in the event of a 25 year, 24-hour storm event.

(b) A hatchery, fish farm, or other facility which meets the most recent Environmental Protection Agency criteria for a concentrated aquatic animal production facility. At the time of publication of this subpart, a facility is considered a concentrated aquatic animal production facility by the Environmental Protection Agency, if it contains, grows, or holds aquatic animals in either of the following categories:

(1) Cold water fish species or other cold water aquatic animals (refer to § 1940.904 for definition) in ponds, raceways, or other similar structures, which discharge at least 30 days per year, but does not include:

(i) Facilities which produce less than 9,090 harvest weight kilograms (approximately 20,000 pounds) of aquatic animals per year; and

(ii) Facilities which feed less than 2,272 kilograms (approximately 5,000 pounds) of food during the calendar month of maximum feeding.

(2) Warm water fish species or other warm water aquatic animals (refer to § 1940.904 for definition) in ponds, raceways, or other similar structures, which discharge at least 30 days per year, but does not include:

(i) Closed ponds which discharge only during periods of excess runoff; or

(ii) Facilities which produce less than 45,454 harvest weight kilograms (approximately 100,000 pounds) of aquatic animals per year.

(c) The construction, expansion, or repair of a dam, which meets the definition of a dam under the National Dam Safety Program (P.L. 104–303), as follows:

(1) Any artificial barrier that has the ability to impound water, wastewater, or any liquid-borne material, for the purpose of storage or control of water, that:

(i) Is twenty-five feet or more in height from the natural bed of the stream channel or watercourse measured at the downstream toe of the barrier; or if the barrier is not across a stream bed or watercourse, from the lowest elevation of the outside limit of the barrier; to the maximum water storage elevation; or

(ii) Has an impoundment capacity for maximum storage elevation of fifty-acre feet or more; but

(2) Does not include:

(i) A levee; or

(ii) A barrier described in § 1940.916(e)(1) that

(A) Is six feet or less in height regardless of storage capacity; or

(B) Has a storage capacity at the maximum water storage elevation that is fifteen acre-feet or less regardless of height; unless the barrier, because of the location of the barrier or another physical characteristic of the barrier, is likely to pose a significant threat to human life or property if the barrier fails (as determined by the Director of the Federal Emergency Management Agency).

(d) Automated chip mills and related facilities, such as loading docks.

§ § 1940.917–1940.920 [Reserved]

§ 1940.921 Third party preparation of Class II environmental assessments.

The applicant may contract with a qualified NEPA consultant for gathering environmental information or for preparing a Class II environmental assessment either at the request of the Agency or with the Agency's prior authorization. Environmental documents prepared by the applicant, without regard to the requirements of this section, will not be accepted by the Agency for any purpose, except as reference or supporting material to an assessment prepared by the Agency. Conditions for third party preparation are:

(a) The applicant is responsible for paying the consultant.

(b) Prior to initiating preparation of the environmental document, the applicant must obtain written authorization to proceed from the State Environmental Coordinator.

(c) The applicant must select consultants whose qualifications and work product clearly demonstrate that they can fulfill their obligations under this subpart and CEQ regulations (40 CFR parts 1500–1508). To demonstrate the consultant's qualifications, the applicant will submit supporting documents for review and concurrence by the State Environmental Coordinator, including, but not limited to:

(1) The technical qualifications of the individuals who will actually be preparing the assessment; and

(2) Work examples consisting of previously written NEPA documents by these individuals.

(d) The applicant and consultant must sign a scope of work, concurred in by the State Environmental Coordinator, which:

(1) Details the scope of the Class II assessment;

(2) States that the assessment is to be completed in accordance with this subpart and CEQ regulations (40 CFR parts 1500–1508);

(3) Provides a timeline for periodic meetings to discuss coordination with other Federal, State, and local agencies; required public notices and public information meetings; potential environmental impacts; evaluation of alternatives; mitigation measures; public comments received; and any other issues of common interest.

(e) The consultant will prepare a draft Class II assessment under the oversight of the State Environmental Coordinator. The Agency will provide the consultant with adequate direction and guidance to ensure development of an environmental assessment which fulfills the requirements of this subpart.

(f) The consultant will sign the draft and the final Class II environmental assessment as the preparer.

(g) [Reserved]

§ 1940.922 Modifications to environmental documents.

Changes to a proposed action in terms of its purpose, operation, location, or design will normally require, at a minimum, modification of the original environmental document and applicable public notice requirements to reflect such change and the associated environmental impacts.

(a)–(b) [Reserved]

(c) *Subsequent loans.* A subsequent loan will be treated as new proposed action with an appropriate level of environmental review completed. To minimize duplication, the environmental review for the subsequent loan can cross-reference to applicable parts of the original environmental review provided data underpinning that part of the environmental review is still current. The original environmental review will not be amended to reflect the subsequent loan. When the subsequent loan is for the purpose of cost overruns, the subsequent loan is treated as a servicing action under this subpart.

§ 1940.923 Preparation of an environmental impact statement.

Environmental impact statements and related documents will be prepared in accordance with CEQ regulations (40 CFR parts 1500–1508) and this subpart.

(a) [Reserved]

(b) *Scoping process.* As soon as possible after a decision has been made to prepare an environmental impact statement, the Agency will initiate a scoping process. The applicant will be responsible for assisting in the scoping process, including information gathering, participating in the public meetings, and paying associated costs.

(1) *Objectives.* The scoping process will be organized to accomplish the following major purposes, and other purposes listed in CEQ regulations, (40 CFR § 1501.7):

(i) Invite the participation of affected Federal, State, and local agencies, any affected Indian Tribe, affected low income and minority populations, the proponent of the action, and any interested parties, including those who may disagree with the action for environmental reasons;

(ii) Determine the scope and the significant issues to be analyzed in depth in the environmental impact statement;

(iii) Identify and eliminate from detailed study the issues which are not significant or which have been covered by prior environmental review, narrowing the discussion of these issues in the statement to a brief presentation of why they will not have a significant effect on the human environment or providing a reference to their coverage elsewhere;

(iv) Allocate assignments for preparation of the environmental impact statement among the lead and cooperating agencies, with the lead agency retaining responsibility for the statement;

(v) Indicate any public environmental assessments and other environmental impact statements which are being or will be prepared that are related to, but are not part of, the scope of the impact statement under consideration;

(vi) Identify other environmental review and consultation requirements so the lead and cooperating agencies may prepare other required analyses and studies concurrently with, and integrated with, the environmental impact statement; and

(vii) Indicate the relationship between the timing of the preparation of environmental analyses and the Agency's tentative planning and decision-making schedule;

(2) *Notice of intent.* The first step in the scoping process will be publication by the Agency of a notice of intent in the **Federal Register.**

(c)–(d) [Reserved.]

(e) *Circulation for draft and final environmental impact statement.* The Agency will circulate for review and comment the draft and final environmental impact statement and ensure that sufficient copies of the draft and final environmental impact statement are printed for appropriate distribution.

(1) Draft environmental impact statements will be sent to the parties

identified in paragraph (b)(2) of this section.

(2) The final environmental impact statement will be provided to all parties that commented on the draft environmental impact statement.

(3) Coincident with the distribution of either a draft or final environmental impact statement, a notice of the document's availability will be published:

(i) Within the project area in the same manner as a notice of intent to prepare an environmental impact statement (paragraph (b)(2) of this section); and

(ii) With the aid of the Agency's environmental staff, in the **Federal Register**, in accordance with EPA's requirements and CEQ regulations (40 CFR § 1506.10).

(f) [Reserved]

(g) *Public information meetings.* The Agency will hold at least one public information meeting near the project site to discuss and receive comments on the draft environmental impact statement. The meeting will be scheduled no sooner than 15 days after the release of the draft environmental impact statement. It will be announced in the same manner as the scoping meeting, and the list of parties receiving an individual notification will be the same as described in paragraph (b)(2) of this section. The meeting will be chaired by the Agency and will be fully recorded so that a transcript can be produced. The applicant will be requested to assist the Agency in holding the meeting and will pay for all costs associated with the meeting or portion of the meeting related to the applicant's project. To the extent possible, this meeting will be combined with public meetings required by other involved agencies.

(h) *Response to comments.* The Agency will respond to written comments on the draft environmental impact statement as required by CEQ (40 CFR § 1503.4). The major and most frequently raised issues during the public information meeting will also be identified and addressed.

(i) [Reserved]

(j) *Contracting for preparation of an environmental impact statement.* At the Agency's discretion, draft and final environmental impact statements will be prepared by a third party consultant selected by the Agency and funded by the applicant.

§ 1940.924 Record of decision.

Upon completion of the review period for a final environmental impact statement, the Agency will publish a concise record of decision in the **Federal Register** (40 CFR 1505.2 and 1506.10).

(a) Coincident with the record of decision's appearance in the **Federal Register**, a notice of the record of decision's availability will be published within the project area in the same manner as described in paragraph (b)(2) of this section.

(b) The environmental impact statement is not complete until a record of decision has been issued and published by the Agency.

§ 1940.925 Use of completed final environmental impact statement.

The final environmental impact statement will be coequally considered along with every other major factor in the Agency's decision on the proposed action.

§ 1940.926 Supplements to environmental impact statements.

Supplements to either a draft or final environmental impact statement will be prepared, circulated, and published by the Agency in the same manner as draft and final environmental impact statements, except for the scoping process which is optional. Applicants will assist in the preparation of supplement environmental impact statements, as determined by the Agency, including assumption of associated costs.

(a) Supplements to either draft or final environmental impact statements will be prepared if:

(1) A substantial change occurs in the proposed action and such change is relevant to the environmental impacts previously considered; and

(2) Significant new circumstances or information pertaining to the proposed action arise which are relevant to environmental concerns and germane to the proposed action or its impacts.

(b) If the Agency determines that the changes or new circumstances do not require the preparation of a supplemental environmental impact statement, the Agency will complete a Class II assessment which will document the reasons for this decision.

(c) If there is a need for expedited or special procedures in the completion of a supplement, CEQ approval for the alternative procedures must first be obtained by the Agency.

(d) The supplement will be used in the Agency's decisionmaking process in the same manner as an initial environmental impact statement.

§§ 1940.927–1940.930 [Reserved]

§ 1940.931 State and local environmental procedures.

The Agency will cooperate with State and local agencies to the fullest extent possible to reduce duplication between NEPA and comparable State and local environmental requirements, unless the agencies are specifically barred from doing so by some other law.

(a) Applicants and State and local agencies that expect to request Agency assistance for specific proposed actions will contact the Agency at the earliest possible date to determine if joint assessments can be effectively developed. Conditions for joint preparation of such documents are below:

(1) The Agency's applicant for financial assistance is also receiving financial, technical, or other assistance from a State or local agency which has jurisdiction and the responsibility to complete an environmental review for the proposed action;

(2) The Agency and the State or local agency will be joint lead agencies. When State laws or local ordinances have environmental requirements in addition to, but not in conflict with, those of the Agency, the Agency will cooperate in fulfilling these requirements, and those of the Agency so that one document will comply with all applicable State and Federal laws;

(3) The Agency and the State or local agency shall jointly: conduct planning and research, establish the scope and content of the environmental review document, participate in the analysis and evaluation of the environmental issues (including alternatives and mitigation), and prepare the appropriate draft or final environmental review documents;

(4) The Agency and the State or local agency shall jointly provide for public involvement as specified in this subpart, plus any additional requirements of the State or local agency;

(5) The Agency and the State or local agency shall jointly concur in the evaluation of the environmental issues and execute either the determinations of compliance and FONSI for the environmental assessment or the Record of Decision for an environmental impact statement, as appropriate.

(b) Many states have environmental laws similar to NEPA, generically referred to as state environmental policy acts. The completion of an environmental impact statement or environmental assessment under the requirements of a state environmental policy act does not eliminate the requirement for the Agency to prepare

its own Federal environmental impact statement or environmental assessment. In the event that the environmental document is not jointly prepared as described in paragraph (a) of this section, but is prepared under the requirements of a state environmental policy act, the finished document will be evaluated by the Agency as reference or supporting material for the Agency's own assessment to minimize duplication of effort.

(1)–(2) [Reserved]

§§ 1940.932—1940.933 [Reserved]

§ 1940.934 Adoption.

(a) *Adoption of an environmental assessment.* (1) The Agency may, under specific conditions, adopt an environmental assessment, or portion thereof, after completion by another Federal agency.

(i)–(iv) [Reserved]

(2) The Agency will supplement the assessment, with the cooperation of the applicant as necessary, to meet the requirements of this subpart and CEQ regulations.

(b) *Adoption of an environmental impact statement.*

(1) The Agency may, under specific conditions, adopt an environmental impact statement, or portion thereof, after completion by another Federal agency.

(i)–(v) [Reserved]

(2) If there are differences between the original environmental impact statement and the proposed action or current environmental conditions, the Agency, with the assistance of the applicant, will update and supplement the environmental impact statement to cover these differences and then recirculate the document as a ''draft'' environmental impact statement with the public so notified.

(3)–(4) [Reserved]

§ 1940.935 Intermediary financial assistance programs.

Except as modified in this section, the provisions of this subpart apply to the intermediary's application for assistance and to all third party applications for assistance from the intermediary when that assistance is to be provided with Agency funds. Intermediary funds, when composed of repayments by third parties to the intermediary, are not considered federal assistance for NEPA purposes when relent by the intermediary.

(a) *General.* Prospective intermediaries and third parties must consider the potential environmental impacts of their proposed actions at the earliest planning stages and develop plans to minimize the potential for adverse impacts to the environment.

(b) *Planning and technical assistance.* Refer to §§ 1940.913(d)(3) and 1940.914(d)(4) for planning and technical assistance requirements.

(c) *Applications for financial assistance to third parties.* (1) The prospective intermediary must provide a completed ''Request For Environmental Information'' or equivalent document as part of its proposed plan for financial assistance to third parties, except as provided in paragraph (c)(2) of this section. The Agency will review the plan, the completed ''Request For Environmental Information,'' and supporting material and will initiate a Class II assessment for the proposed action, except as provided in paragraph (c)(2) of this section. This Class II environmental assessment will discuss the important environmental resources in the proposed service area, the potential for cumulative impact from the activities proposed by the plan and the measures which may be employed to avoid or mitigate such impact. Public notification requirements do not apply to this environmental assessment, because neither the completion of this environmental assessment, nor the approval of this type of application is an Agency commitment to the use of funds for any identified third party projects. Should the proposal be approved or the Agency otherwise make a commitment of resources to the intermediary, each third party proposal to be assisted will undergo the appropriate environmental review and public notification requirements, as specified in this subpart, before the Agency concurs in intermediary assistance to the third party.

(2) When the intermediary's plan specifically identifies one or more third parties who will be the sole recipient of the intermediary's financial assistance program, the Agency may forego the Class II environmental assessment described in paragraph (c)(1) of this section and proceed directly to preparation of the appropriate environmental review for each of the identified third parties. If there is some question whether third parties listed in the plan will become actual recipients of assistance under the plan, completion of the environmental review for those third parties, including preparation of the ''Request for Environmental Information'' for each, may be postponed until the intermediary receives definite proposals from those third parties.

(3) The intermediary will provide the Agency with a properly completed ''Request For Environmental Information'' for each third party proposal classified as a Class I or Class II action no later than when the intermediary requests Agency concurrence in the third party proposal.

(4) The intermediary will inform the Agency if there is a change in the plan for financial assistance subsequent to completion of the Class II environmental assessment or if there is a change in a third party proposal subsequent to completion of the appropriate environmental review for that proposal. The Agency will then modify the existing environmental assessment, pursuant to § 1940.922, or complete a new assessment, as appropriate.

(d) *Housing Preservation Grant (HPG) Program.* The intermediary's request for an HPG will be subject to a Class I assessment. Third party requests for assistance from the intermediary will be subject to the appropriate level of environmental review as described in 7 CFR, part 1944, subpart N, which contains additional environmental guidance unique to the HPG program.

§ 1940.936 [Reserved]

§ 1940.937 Management, lease, and disposition of Agency-owned property.

(a) [Reserved]

(b) *Completion of an environmental review.* (1) The Agency will complete the appropriate level of environmental review before lease or disposal of Agency-owned property and prior to any repairs or maintenance activities on such property. Normally lease or disposal of Agency-owned property is considered a categorical exclusion. However, a Class I or Class II assessment, or an environmental impact statement, as appropriate, will be completed when:

(i) The proposed transaction is controversial for environmental reasons; or

(ii) The Agency has reason to believe the transaction would result in a specified change in use of real property within the reasonably foreseeable future; or

(iii) The property contains one or more of five specific environmental resources. Each of these five resources impose special requirements on the management, lease, and disposal of Agency-owned property:

(A) All or part of the property is located within the Coastal Barriers Resource System;

(B) All or part of the property is listed or eligible for listing on the Natural Register of Historic Places;

(C) Property contains Native American human remains and cultural items;

(D) Property is located within a special flood or mudslide hazard area; or

(E) Property contains wetlands.

(2) The requirements for public involvement in § 1940.911 are fully applicable to the Class I and Class II environmental assessments completed in accordance with paragraph (b)(1) of this section.

(c)–(e) [Reserved]

§ 1940.938 Emergencies.

For purposes of this subpart, an emergency circumstance is defined as one involving an immediate or imminent danger to public health or safety. In accordance with CEQ regulations (40 CFR § 1506.11), alternative arrangements are limited to actions necessary to control the immediate impacts of the emergency. All other actions remain subject to NEPA review.

(a) *Action requiring an environmental impact statement.* When an emergency circumstance makes it necessary to take an action with significant environmental impact without observing the provisions of this subpart or the CEQ regulations, the Administrator will consult with the Office of General Counsel and with the CEQ about alternative arrangements before the proposed action is taken.

(b) [Reserved]

§§ 1940.939–1940.940 [Reserved]

§ 1940.941 Environmental risk management.

(a) *Purpose.* (1) This section implements the requirements of the statutes listed below and contains Agency policies and procedures for response to the release of hazardous substances and petroleum products and for management of hazardous wastes:

(i) Clean Air Act (CAA), (42 U.S.C. 7401 *et seq.*);

(ii) Clean Water Act (CWA), (33 U.S.C. 1251 *et seq.*);

(iii) Comprehensive Environmental Response, Compensation, and Liability Act (CERCLA), (42 U.S.C. 9601 *et seq.*);

(iv) Federal Insecticide, Fungicide and Rodenticide Act(FIFRA), (7 U.S.C. 136 *et seq.*);

(v) Marine Protection, Research, and Sanctuaries Act (MPRSA), (42 U.S.C. 1411 *et seq.*);

(vi) Resource Conservation and Recovery Act (RCRA), (42 U.S.C. 6901 *et seq.*);

(vii) Safe Drinking Water Act (SDWA), (42 U.S.C. 300h);

(viii) Toxic Substances Control Act (TSCA), (15 U.S.C. 2601 *et seq.*).

(2) Implementing regulations, specific to each of the above laws, are applicable to Agency activities but will not be repeated in this subpart, except for clarification.

(3) This section applies to all Agency program and administrative actions as described in § 1940.901.

(b) *Objectives.* The objectives of this section are:

(1) To ensure that the applicant, guaranteed lender, and intermediary comply with Federal, State, and local laws regarding the release of hazardous substances and petroleum products and the management of hazardous wastes;

(2) To establish and incorporate into lending practices an environmental risk management program. A major component of this risk management program will be the performance of due diligence:

(i) To minimize adverse impacts to the security interests in real property caused by potential contamination from hazardous substances, hazardous wastes, and petroleum products; and

(ii) To establish a process to minimize liability under the laws regulating management of hazardous substances, hazardous wastes, and petroleum products.

(c) *Definitions.* The definitions contained in § 1940.904 are applicable to this section. The following definitions are applicable to this section.

Agency official. The Agency employee with primary responsibility for processing or servicing the loan, grant, or contract in question. The Agency official may or may not be the Agency approval official.

American Society for Testing and Materials (ASTM). A developer and provider of voluntary consensus standards, related to technical information and services having internationally recognized quality and applicability that: promote public health and safety, and the overall quality of life; contribute to the reliability of materials, products, systems and services; and facilitate national, regional, and international commerce.

Appropriate environmental regulatory authority. Unless otherwise stated, refers to the Federal, State, or local regulatory agency granted oversight authority for management of one or more hazardous substances, hazardous wastes, or petroleum products.

ASTM. American Society for Testing and Materials.

Due diligence. The process of inquiring into the environmental condition of real estate, in the context of a real estate transaction, to determine the potential for contamination from release of hazardous substances, hazardous wastes, and petroleum products, and to determine what impact such contamination may have on the regulatory status and the security value of the property.

Emergency response action. An immediate action required to temporarily contain and stabilize releases or threatened releases of hazardous substances, hazardous wastes, and petroleum products that pose imminent and substantial threats to human health and the environment on property in which the Agency has a security interest.

Environmental audit. An independent investigative process to determine if the processes, equipment, and operations of an existing facility are in compliance with applicable environmental laws and regulations. The term ''environmental audit'' should not be used to describe the due diligence process, but an environmental audit may be conducted in conjunction with due diligence.

Environmental professional. A non-Agency professional, who possesses the technical and scientific credentials necessary to conduct due diligence evaluations and, from the information gathered by such evaluations, has the ability to develop conclusions regarding potential environmental contamination. In addition, an environmental professional must be able to provide technical oversight, direction, and management of response actions pursuant to Comprehensive Environmental Response, Compensation, and Liability Act and Resource Conservation and Recovery Act. This term also refers to a professional with the skills necessary to perform environmental audits.

Facility. In relation to the definition of a potentially responsible party under the Comprehensive Environmental Response, Compensation and Liability Act, is defined as any building, structure, installation, equipment, pipe or pipeline, storage container, motor vehicle, rolling stock, or aircraft; or any site or area where a hazardous substance has been deposited, stored, disposed of, or otherwise comes to be located.

Hazardous substance. Is identified as:

(1) Any substance designated pursuant to section 311(b)(2)(A) of the Clean Water Act;

(2) Any element, compound, mixture, solution, or substance designated pursuant to section 102 of Comprehensive Environmental Response, Compensation, and Liability Act;

(3) Any hazardous waste having characteristics identified under or listed pursuant to section 3001 of the Resource Conservation and Recovery Act;

(4) Any toxic pollutant listed under section 307(a) of the Clean Water Act;

(5) Any hazardous air pollutant listed under section 112 of the Clean Air Act; and

(6) Any imminently hazardous chemical substance or mixture with respect to which the U.S. Environmental Protection Agency Administrator has taken action pursuant to section 7 of the Toxic Substances Control Act.

Hazardous waste. This is defined as a solid waste, or a combination of solid wastes, which because of its quantity, concentration, or physical, chemical, or infectious characteristics may cause, or significantly contribute to, an increase in mortality or an increase in serious irreversible or incapacitating reversible illness; or pose a substantial present or potential hazard to human health or the environment when improperly treated, stored, transported, or disposed of or otherwise managed. Refer to 40 CFR 261.3 for the regulatory definition of a hazardous waste and to 40 CFR 261.4 for waste materials excluded from the definition of hazardous waste.

Petroleum products (and their derivatives). Petroleum products are not, by definition, a hazardous substance. Petroleum products include crude oil or any fraction thereof which is liquid at ambient conditions of temperature and pressure (60 degrees Fahrenheit and 14.7 pounds per square inch absolute).

Potentially responsible party (PRP). See the Comprehensive Environmental Response, Compensation, and Liability Act:

(1) Current owner, operator, or owner and operator, of a facility from where there is a release or a threatened release of a hazardous substance (whether or not they disposed of hazardous substances during their ownership). See definition for ''facility.''

(2) Prior owner, operator, or owner and operator, of a facility, if they disposed of hazardous substances during ownership or acquired actual knowledge of a release or threatened release during ownership and subsequently transferred ownership without disclosure of the knowledge to the purchaser.

(3) Transporters who brought hazardous substances to a facility selected by them.

(4) Generators and other owners or possessors of the hazardous substances who arranged for disposal or treatment.

Release. A release is any spilling, leaking, pumping, pouring, emitting, emptying, discharging, injecting, escaping, leaching, dumping, or disposing into the environment including the abandonment or discarding of barrels, containers, and other closed receptacles containing any hazardous substances. This definition excludes:

(1) Releases which result in exposure to persons solely within a workplace; and

(2) Emissions from the engine exhaust of a motor vehicle, rolling stock, aircraft, vessel, or pipeline pumping station engine.

Response action. All investigative and remedial activities related to a resolution of an environmental threat or contamination caused by a release or disposal of hazardous substances, hazardous wastes, or petroleum products.

Safe. For the purposes of human health and safety with respect to hazardous substances, hazardous wastes, and petroleum products, the level of safety acceptable to the Agency will be that level required or designated by the appropriate environmental regulatory authority as the minimum ''safe'' level for the contaminant of concern.

Underground storage tank (UST). A UST is a tank or combination of tanks and any connected underground piping that has at least ten percent of its combined volume underground. For the purposes of this section, regulated USTs are those subject to federal regulation under the Resource Conservation and Recovery Act; unregulated USTs are those not subject to the installation, monitoring, and notification standards of the Resource Conservation and Recovery Act. Both regulated and unregulated USTs may be further subject to State and local requirements. Unregulated USTs include:

(1) Farm and residential USTs with a capacity of less than 1,100 gallons used for storing motor fuel for non-commercial purposes;

(2) USTs (of any size) used for storing heating oil for consumption on the premises where stored;

(3) Other types of tank systems listed in 40 CFR § 280.12, such as: septic tanks; pipeline facilities; surface impoundments, pit, pond, or lagoons; stormwater or wastewater collection systems; flow-through process tanks; liquid trap or associated gathering lines directly related to oil or gas production and gathering operations; and storage tanks situated in an underground area (*i.e.,* basement, cellar, mineshaft, etc.) if the tank is situated on or above the surface of the floor.

UST. Underground storage tank.

(d) *Responsibilities.*—(1) *Agency official.* The Agency official is responsible for ensuring compliance with the requirements of this section, ensuring that adequate training and guidance on the requirements of this section is provided to guaranteed lenders and intermediaries, and coordinating activities with the State Environmental Coordinator.

(2) *Applicants.* Applicants are responsible for identifying and complying with all Federal, State, and local laws regarding the release of hazardous substances and petroleum products and the management of hazardous wastes that are applicable to their financial operations or business interests. Applicants will maintain their operations in an environmentally sound manner and not place the lender's security interest at risk.

(3) *Contract or fee appraiser.* Contract or fee appraisers are responsible for reporting to the Agency, guaranteed lender or intermediary, as appropriate, any potential contamination from hazardous substances, hazardous wastes, and petroleum products of which they become aware, either through disclosure by interested parties, normal observations, or research conducted during an appraisal assignment. Appraisals will be based on all available information, including the due diligence report.

(4) *Environmental professional.* A qualified environmental professional:

(i) Will perform all Phase I and Phase II Environmental Site Assessments, all analytical procedures (including sampling and testing activities) related to any environmental media, response or corrective actions, and environmental audits;

(ii) When requested, will evaluate remedial options and provide a cost estimate for response actions on subject property as part of the due diligence report, which may then be used by the Agency, appraisers, guaranteed lenders, or intermediaries, as appropriate, to develop risk analyses and to make security value determinations in loan processing and servicing decisions;

(iii) Will be responsible for obtaining and analyzing environmental samples in accordance with proper health and safety procedures required by 29 CFR 1910.120 ''Hazardous Waste Operations and Emergency Response'' and the most current sampling and laboratory protocols promulgated by the appropriate environmental regulatory authorities.

(5) *Guaranteed lender and intermediary.* The guaranteed lender and the intermediary are responsible for ensuring compliance with all Federal,

State, and local laws regarding management of hazardous substances, hazardous wastes, and petroleum products. Noncompliance may affect the Agency's payment of loss claims under the guarantee. The guaranteed lender and the intermediary will:

(i) Assist the Agency in obtaining any information needed by the Agency to make a determination of applicant compliance with the requirements of this section and with applicable Federal, State, and local laws relative to management of hazardous substances, hazardous wastes, and petroleum products;

(ii) Ensure that their contract and fee appraisers comply with the responsibilities outlined in paragraph (d)(3) of this section;

(iii) Support the general standards and implementation requirements of paragraphs (e) and (f) of this section in conjunction with processing and servicing requirements described in paragraphs (g) and (h) of this section;

(iv) Ensure that due diligence is performed in conjunction with processing and servicing actions as prescribed in this section;

(v) Ensure that mitigation measures and other compliance conditions required by the Agency and contained in loan and grant documents are implemented;

(vi) Consult with the Agency, in a timely manner, on any applicant problem relative to the management of hazardous substances, hazardous wastes, and petroleum products;

(vii) Promptly notify appropriate regulatory authorities and the Agency with respect to a release or threatened release of hazardous substances, hazardous wastes, and petroleum products on property in which the Agency has a security interest; and

(viii) Maintain copies of the due diligence report, environmental audit, UST data, and other relevant information, as applicable, in their case files and provide the Agency with copies of such information.

(e) *General standards.* (1) The guaranteed lender or the intermediary, as appropriate, will incorporate into their lending practices the environmental risk management program described in this section. The purpose of this risk management program is:

(i) To make a reasonable and prudent attempt to minimize liability, and

(ii) To evaluate the effect of potential contamination from hazardous wastes and from the release of hazardous substances and petroleum products on the security value of real property and to maximize recovery on such affected security property.

(2) The guaranteed lender or the intermediary, as appropriate, will require applicants to comply with all environmental laws related to the use, transportation, storage, and disposal of hazardous substances, hazardous wastes, and petroleum products.

(3) The Agency will not provide additional financial assistance or other program benefits to applicants who fail to comply with environmental laws or with compliance conditions contained in the loan and grant documents relative to the use, transportation, storage, and disposal of hazardous substances, hazardous wastes, and petroleum products, unless that assistance will be used to achieve compliance.

(4) The guaranteed lender or the intermediary, as appropriate, will provide complete and timely disclosure to appropriate environmental regulatory authorities of information concerning contamination or potential contamination of any property by hazardous substances, hazardous wastes, and petroleum products discovered during processing or servicing actions under all programs.

(5)–(8) [Reserved]

(f) *Implementation of general standards.* This paragraph describes how the general standards of paragraph (e) of this section will be implemented. For more explicit guidance on processing and servicing actions for specific programs, refer to paragraphs (g) and (h) of this section.

(1) *Due diligence.* (i) A major component of the environmental risk management program is the conduct of due diligence. Unless otherwise modified by this section, the guaranteed lender or intermediary, as appropriate, will conduct due diligence in conjunction with the appraisal:

(A) Before the commitment of Agency resources, as described in § 1940.910(e), when the proposed security involves real property; and

(B) Before a decision on any loan servicing activity by guaranteed lender or intermediary which could foreseeably lead to acquisition of real property by the Agency, guaranteed lender, or intermediary.

(ii) The acceptable standard of evidence of due diligence is the most current version of the American Society of Testing and Materials Standard Practices or Guide, information on which is available in any Rural Development Office:

(A) *ASTM Standard Practice for Environmental Site Assessments: Transaction Screen Process (Designation: E 1528).* The guaranteed lender and the intermediary are responsible for completing the Transaction Screen Questionnaire for guaranteed loans and loans or grants to third parties, respectively. A Phase I Environmental Site Assessment will be performed if the results of the Transaction Screen Questionnaire are inconclusive.

(B) *ASTM Standard Practice for Environmental Site Assessments: Phase I Environmental Site Assessment Process (Designation: E 1527).* All Phase I Environmental Site Assessments will be performed by environmental professionals. The guaranteed lender and the intermediary are responsible for obtaining the Phase I Environmental Site Assessments for guaranteed loans and loans or grants to third parties, respectively.

(C) *ASTM Standard Guide for Environmental Site Assessments: Phase II Environmental Site Assessment Process (Designation: E 1903–97).* Responsibility for completion of Phase II Environmental Site Assessments is the same as for Phase I Environmental Site Assessments.

(iii) Guaranteed lenders and intermediaries will incorporate the American Society for Testing and Materials standards into their processing and servicing procedures or use an equivalent process of due diligence approved by the State Environmental Coordinator in consultation with the Regional Office of General Counsel.

(2) *Applicant compliance.* (i) *Documents.* All loan and grant agreements will include a provision for compliance with any measures required as conditions of financial assistance and with all applicable environmental laws relative to the use, transportation, storage, and disposal of hazardous substances, hazardous wastes, and petroleum products.

(ii) *Noncompliance.* Applicants who do not comply with environmental laws related to the use, transportation, storage, and disposal of hazardous substances, hazardous wastes, and petroleum products or with the environmental compliance conditions set forth by the Agency or the guaranteed lender in loan and grant documents may be excluded from further Agency benefits under the debarment and suspension procedures found at 7 CFR part 3017 or through procedures provided by other regulations.

(iii) *Environmental audits.* With the exception of the Single Family Housing Programs authorized by sections 502, 504, 509, 523, and 524 of the Housing Act of 1949, and when the Agency

determines that it is needed, the Agency will require an applicant to provide an environmental audit before making a decision on processing or servicing actions or periodically to monitor an applicant's on-going environmental compliance activities. Environmental professionals, familiar with the type of facility being investigated, will perform these audits to:

(A) Determine compliance status with environmental laws;

(B) Evaluate environmental management practices, such as storage, transportation, and disposal of hazardous wastes;

(C) Identify environmental risks and liabilities, including those attributed to past practices, particularly as they may adversely affect the financial viability of the applicant's facility; and

(D) Monitor past and present environmental compliance activity.

(g) *Processing activities.* (1) *General requirements.* These requirements apply to the processing of all direct and guaranteed loans and grants, including loans and grants made to a third party by an intermediary using Agency funds. Additional requirements for housing actions and business and essential community facility actions are outlined in paragraphs (g)(2) and (3) of this section, respectively.

(i) *Due diligence.* If due diligence results in a finding that a release of hazardous substances, hazardous wastes, or petroleum products is present on the property and may adversely affect security values or the intended use of the property, the guaranteed lender or intermediary, as appropriate, will either:

(A) Require a pre-closing cleanup conducted and paid for by the owner or seller of the property;

(B) Require different security;

(C) Parcel-out the contaminated portion of the property and forgo accepting that portion as security; or

(D) Knowingly accept the contaminated property as security. Acceptance of contaminated property as security requires the prior concurrence of the Agency.

(ii) *USTs.* UST closure, including removal and corrective action or closure in place, will be undertaken by the seller unless, for good cause, the Agency decides otherwise. When replacing a UST, aboveground storage tanks will be installed whenever practicable to facilitate maintenance and leak detection.

(2) *Housing actions.* In addition to the general requirements of paragraph (g)(1) of this section, the following conditions apply to the processing of all direct and guaranteed housing actions, regardless of the type of loan or grant program which finances the action. A unit is equivalent to housing for a single family.

(i) *Due diligence and housing actions.*—(A) Existing structures (multiple and single unit) and new construction of single unit housing. Due diligence will be performed by the guaranteed lender or intermediary, as appropriate, if:

(*1*) An appraiser reports to the guaranteed lender or intermediary, as appropriate, that potential contamination from hazardous substances, hazardous wastes, or petroleum products has been observed on the property or encountered through research or interviews with individuals knowledgeable about the property; or

(*2*) The guaranteed lender or intermediary, as appropriate, becomes aware of possible contamination through some means other than the appraiser's report.

(B) *New construction of multiple unit housing and subdivisions.* Due diligence will be performed by the guaranteed lender or intermediary, as appropriate, for applications for new construction for multiple unit housing actions and for applications relating to the development of a subdivision, including planning and technical assistance, land purchase, and site development. Due diligence will also be performed for preapproval of subdivisions, if such preapproval is required by program regulations.

(ii) *USTs and housing actions.* For all housing actions, if an appraiser reports the presence or suspected presence of a UST, or if the Agency, guaranteed lender, or intermediary, as appropriate, becomes aware of a possible UST through a due diligence report or other some other means, the following conditions apply:

(A) When a UST is not essential to the operation of the housing project, the UST will be closed as a condition of financial assistance. Closure is usually through removal or by filling the UST in place with inert material. Closure must follow the applicable requirements of the appropriate regulatory authority, if any, and the applicant must provide the Agency, guaranteed lender, or intermediary, as appropriate, with appropriate UST closure documentation before loan closing or grant award.

(B) When a UST is essential to the operation of the housing project and the UST is subject to regulatory requirements, the applicant will provide the Agency, guaranteed lender, or intermediary, as appropriate, with evidence that the UST is in compliance with those requirements before loan closing or grant award.

(C) When a UST is essential to the operation of the housing project and the UST is not subject to regulatory requirements:

(*1*) Before loan closing or grant award, the applicant will provide the Agency, guaranteed lender, or intermediary, as appropriate, with a signed, written statement from the seller that, after investigation by the seller, the UST is in good working order, without leaks. The statement will include all available tank specifications, including but not limited to age, tank composition, installation method, and warranty.

(*2*) If, in spite of the warranty, the UST's age and reliability are still in question, the Agency, guaranteed lender, or intermediary, as appropriate, shall request that either a tightness test be performed or that the UST be replaced before loan closing or grant award.

(3) *Business and essential community facility actions.* In addition to the general requirements of paragraph (g)(1) of this section, the following conditions apply to the processing of all direct and guaranteed business and essential community facility actions regardless of the type of loan or grant program which finances the action:

(i) *Due Diligence and business and essential community facility actions.* Due diligence will be completed by the guaranteed lender or intermediary, as appropriate, for all applications where real property will be taken as security.

(ii) *USTs and business and essential community facility actions.* (A) When a UST is not essential to the operation of the facility, the UST will be removed as a condition of financial assistance. Removal must follow the applicable requirements of the appropriate regulatory authority, if any, and the applicant must provide the Agency, guaranteed lender, or intermediary, as appropriate, with appropriate UST closure documentation before loan closing or grant award.

(B) When a UST is essential to the operation of a facility and the UST is subject to regulatory requirements, the applicant will provide the Agency, guaranteed lender, or intermediary, as appropriate, with evidence that the UST is in compliance with those requirements before loan closing or grant award.

(C) When a UST is essential to the operation of a facility and the UST is not subject to regulatory requirements:

(*1*) Before loan closing or grant award, the applicant will provide the Agency, guaranteed lender, or intermediary, as appropriate, with a signed, written statement from the seller, that after investigation by the seller, the UST is in

good working order, without leaks. The statement will include all available tank specifications, including but not limited to age, tank composition, installation method, warranty, and the results of a tightness test unless it is more cost-effective to proceed with replacement of the UST.

(*2*) Tightness tests must comply with the appropriate regulatory standards. USTs which fail tightness tests must be brought into compliance or replaced. If the UST is replaced, appropriate closure documentation on the old UST must be provided before loan closing or grant award.

(iii) *Environmental audits.* Applicants (including applicants applying for additional federal financial assistance through the Agency, guaranteed lender, or intermediary) who operate facilities that generate hazardous wastes in quantities equal to or greater than 100 kilograms in a calendar month (small quantity generators and larger) will agree in the loan agreement to provide the Agency, guaranteed lender, or intermediary, as appropriate, as a condition of financial assistance, an annual audit prepared by an independent environmental professional or consultant. The consultant must be familiar with the type of operation they are auditing. To minimize the cost of the audit, consultants may limit their evaluation to those activities, outlined in paragraph (f)(2)(iii) of this section, that have the potential for adverse impacts to human health and the environment and to the security value of the property.

(h) *Servicing activities.* (1) *General requirements.* These requirements apply to the servicing of all direct and guaranteed loans and grants, including loans and grants made to a third party by an intermediary using Agency funds. Additional requirements for guaranteed loans are outlined in paragraph (h)(2) of this section.

(i) *Due diligence.* The guaranteed lender or intermediary, as appropriate, will conduct due diligence in conjunction with the appraisal for all loan servicing actions which require a determination of security value or which could lead to acquisition of real property by the guaranteed lender, intermediary, or Agency. For the Guaranteed Single Family Housing Program, due diligence will only be performed by the guaranteed lender when:

(A) An appraiser reports that potential contamination from hazardous substances, hazardous wastes, or petroleum products has been observed on the property or encountered through research or interviews with individuals knowledgeable about the property; or

(B) The Agency or the guaranteed lender becomes aware of possible contamination through some means other than the appraiser's report.

(ii) *Monitoring compliance.* The guaranteed lender or intermediary, as appropriate, will monitor applicant compliance with applicable Federal, State, and local laws relating to the use, transportation, storage, and disposal of hazardous substances, hazardous wastes, and petroleum products and with any compliance conditions contained in loan and grant documents.

(A) The frequency and extent of monitoring will be appropriate to the degree of environmental risk and liability involved.

(B) Guaranteed lenders and intermediaries will promptly inform the Agency official of problems or potential problems with applicant compliance and will cooperate fully with the Agency in developing appropriate resolutions.

(iii) *Noncompliance.* If it is discovered that an applicant has failed to comply with applicable Federal, State, and local laws relating to the use, transportation, storage, and disposal of hazardous substances, hazardous wastes, and petroleum products or with the compliance conditions contained in loan and grant documents, the guaranteed lender or intermediary, as appropriate, will notify the applicant of the need to take immediate corrective action and take any additional actions necessary to assure compliance.

(iv) *Release or threatened release.* If a release or threatened release of hazardous substances, hazardous wastes, or petroleum products is discovered on an applicant's property, the guaranteed lender or intermediary, as appropriate, will promptly notify the applicant in writing that immediate corrective action must be taken, consistent with appropriate regulatory authority requirements and take any additional actions necessary to assure compliance with the notice.

(v) *Bankruptcy.* If an independent appraisal is necessary in bankruptcy proceedings, due diligence will be conducted in conjunction with that appraisal.

(2) *Guaranteed loans.* In addition to the general requirements of paragraph (h)(1) of this section, the following conditions apply to the servicing of all guaranteed loans:

(i) *Release of security property by lender.* If contamination from release of hazardous substances, hazardous wastes, or petroleum products contributes to a guaranteed lender's request to release security property, the request to the Agency will include all available due diligence documentation furnished by the guaranteed lender to support and justify the request.

(ii) *Accepting title to property from guaranteed lenders.* If the due diligence documentation provided by the guaranteed lender shows that contamination is present and that the cost of remedial or corrective response actions plus the amount of the debt exceeds the security value, the Agency may choose not to accept title to the property.

(iii) *Payment of loss claims.* If there is a loss claim due to contamination from a release of hazardous substances, hazardous wastes, or petroleum products, the Agency shall not finalize loss claims until the guaranteed lender has sold the property.

(3)–(4) [Reserved]

(i) *Single Family Housing Programs waiver.*

An Agency official may request and the Administrator or designee may waive, on a case-by-case basis, any of the environmental risk management requirements of § 1940.941 applicable to Single Family Housing Programs authorized by sections 502, 504, 509, 523, and 524 of the Housing Act of 1949, provided the Agency determines that application of the requirement would adversely affect the Government's interest and that the proposed waiver is consistent with applicable statutes.

§ 1940.942 Lead-based paints.

The provisions of 24 CFR, part 35, subparts A, B, C, D, J, and R will be applicable to all Agency programs involving housing.

§ 1940.943 Indoor air pollutants.

All Agency financially assisted projects will be in compliance with State or local laws, ordinances, codes, or regulations governing indoor air pollution.

§§ 1940.944–1940.948 [Reserved]

§ 1940.949 Appeals.

An applicant that is directly and adversely affected by a program administrative decision made by the Agency under this subpart may appeal that decision under the provisions of 7 CFR part 11 and subpart B of part 1900 of this chapter. However, the National Appeals Staff does not have the authority to change or waive applicable laws or regulations. A program administrative decision based on clear and objective statutory or regulatory requirements is not appealable but can be reviewed.

§ 1940.950 [Reserved]

Dated: August 13, 2000.

Jill Long Thompson,

Under Secretary, Rural Development.

[FR Doc. 00–22634 Filed 9–13–00; 8:45 am]

BILLING CODE 3410–XV–U

Federal Register

Thursday,
September 14, 2000

Part IV

Environmental Protection Agency

40 CFR Parts 9 and 63

Hazardous Air Pollutants: Amendments to the Approval of State Programs and Delegation of Federal Authorities; Final Rule

ENVIRONMENTAL PROTECTION AGENCY

40 CFR Parts 9 and 63

[FRL–6864–6]

RIN 2060–AG60

Hazardous Air Pollutants: Amendments to the Approval of State Programs and Delegation of Federal Authorities

AGENCY: Environmental Protection Agency (EPA).

ACTION: Final rule.

SUMMARY: This rule modifies the Agency's procedures for delegating hazardous air pollutant (HAP) standards and other requirements to State, local, and territorial agencies, and Indian tribes (S/L/T). Under section 112(l) of the Clean Air Act (Act), EPA is authorized to approve alternative S/L/T HAP standards or programs when such requirements are demonstrated to be no less stringent than EPA's rules. Today's changes to section 112(l) revise our procedures and criteria for approving alternative S/L/T measures.

Today's action amends our existing regulations that implement section 112(l) of the Act. The changes will help S/L/T's by offering a range of options for demonstrating equivalence with the Federal requirements and expediting the approval process.

These changes are in response to requests we received from State and local air pollution control agencies to reconsider our existing regulations in light of implementation difficulties that they anticipate or have experienced. We believe this effort is consistent with the President's regulatory ''reinvention'' initiative. It will result in less burden to S/L/Ts, regulated industries (by avoiding duplicative requirements), and the Federal Government, without sacrificing the emissions reduction and clean air enforcement goals.

This rulemaking also addresses requirements that apply to S/L/Ts, should they choose to obtain delegation or program approval under section 112(l). (Note that obtaining delegation under section 112(l) is voluntary). This rulemaking does not include any requirements that apply directly to stationary sources of HAP or small businesses that emit HAP.

EFFECTIVE DATE: This final rule will be effective on October 16, 2000.

ADDRESSES: All information used in the development of the proposed and final rules is contained in Docket No. A–97–29. The docket is available for public inspection and copying between 8:00 a.m. and 5:30 p.m., Monday through Friday at the Air and Radiation Docket and Information Center, U.S. Environmental Protection Agency, 401 M Street, SW., Washington, DC 20460; telephone (202) 260–7548, fax (202) 260–4400. A reasonable fee may be charged for copying.

These documents can also be accessed through the EPA web site at: http://www.epa.gov/ttn/oarpg. For further information and general questions regarding the Technology Transfer Network (TTNWEB), contact Mr. Hersch Rorex at (919) 541–5637 or rorex.hersch@epa.gov, or Mr. Phil Dickerson at (919) 541–4814 or dickerson.phil@epa.gov.

FOR FURTHER INFORMATION CONTACT: Mr. Thomas A. Driscoll, Information Transfer and Program Integration Division (MD–12), U.S. Environmental Protection Agency, Research Triangle Park, North Carolina 27711, telephone (919) 541–5135, or electronic mail at driscoll.tom@epa.gov or Ms. Kathy Kaufman, Information Transfer and Program Integration Division (MD–12), U.S. Environmental Protection Agency, Research Triangle Park, North Carolina 27711, telephone (919) 541–0102, or electronic mail at kaufman.kathy@epa.gov.

SUPPLEMENTARY INFORMATION:

Regulated Entities

Entities potentially affected by this rule are S/L/Ts that request approval of rules or programs to be implemented in place of Act section 112 rules, emissions standards, or requirements, or voluntarily request delegation of unchanged section 112 rules. These are the types of entities that EPA is now aware could potentially be regulated by this rule. Other types of entities not included in the list could also be regulated. The procedures and criteria for requesting and receiving approval of these S/L/T rules or programs or voluntarily requesting delegation of section 112 rules are in § 63.90 through § 63.97, excluding § 63.96, of this subpart.

Outline

The information presented in this preamble is organized as follows:

I. Purpose and Background
II. Summary of Major Issues
  A. Enforceable Mechanisms
  B. S/L/T Risk-based Programs
  C. Other Section 112 Programs
  D. Work Practices
  E. Delegation of Authorities
III. How do the Revised Delegation Options Work?
  A. Section 63.91—Criteria for Straight Delegation and Criteria Common to all Approval Options
  B. Section 63.92—Approval of S/L/T Requirements That Adjust a Section 112 Rule
  C. Section 63.93—Approval of S/L/T Requirements That Substitute for a Section 112 Rule
  D. Section 63.94—Equivalency by Permit (EBP)
  E. Section 63.95—Additional Approval Criteria for Accidental Release Prevention Programs
  F. Section 63.96—Review and Withdrawal of Approval
  G. Section 63.97—Approval of a S/L/T Program That Substitutes for Section 112 Requirements
IV. How Will EPA Determine Equivalency for S/L/T Alternative NESHAP Requirements?
  A. Work Practice Standards and Requirements
  B. Changes to Monitoring Frequency and Recordkeeping and Reporting
  C. Equivalency for S/L/T Requirement Established Under New Source Review/Prevention of Significant Deterioration (NSR/PSD)
  D. Title V Permit Renewal Issues
V. What are the Requirements to Review This Action in Court?
VI. Administrative Requirements for This Rulemaking
  A. Docket
  B. Executive Order 12866
  C. Executive Order 13132
  D. Consultation and Coordination With Indian Tribal Governments Under Executive Order 13084
  E. Paperwork Reduction Act
  F. Regulatory Flexibility Act (RFA)
  G. Unfunded Mandates Reform Act
  H. Protection of Children from Environmental Health Risks and Safety Risks Under Executive Order 13045
  I. National Technology Transfer and Advancement Act
  J. Submission to Congress and the Comptroller General
VII. Statutory authority

I. Purpose and Background

Section 112(l) was added to the 1990 amendments of the Act in recognition of the efforts by many S/L/T, during the 1980's, to develop their own programs to address HAPs. These programs may have requirements that apply to the same sources covered by Federal rules that have been subsequently developed under section 112. S/L/T requirements may differ from the corresponding Federal emission standards but may achieve equivalent or better environmental results. One major purpose of section 112(l) is to provide a mechanism for the approval of S/L/T requirements and programs in lieu of the Federal standards, where such a demonstration can be made. A second goal of the program is to facilitate the delegation of section 112 standards to S/L/T programs who intend to implement

and enforce the Federal requirements as written.

At present, the section 112 rules of major concern are the maximum achievable control technology (MACT) standards developed under sections 112(d) or 112(h) of the Act. However, as the Federal air toxics program matures, we anticipate that other section 112 rules or requirements may also be delegated. For example, area source requirements developed under section 112(k) authority and residual risk standards developed under section 112(f) authority will be issued in the next several years.

In November, 1993, EPA first published rules (58 FR 62262, November 26, 1993) to implement section 112(l). The regulations were codified at 40 CFR Part 63, subpart E. Following promulgation, several S/L/Ts expressed concern that the regulations would be difficult to implement and, in some circumstances, unworkable. Over the past several years we have been working with S/L/T representatives and other external parties to rethink how subpart E might be better structured to accomplish the goals of the Act. We have conducted stakeholder meetings to assess the concerns not only of S/L/Ts, but also of industries affected by the subpart E regulations and environmental/public interest groups. We also considered input from work groups, comprised of representatives from S/L/Ts and EPA, who addressed specific issues. Based on this input, in September, 1997, we placed on the Internet for comment a draft preamble and rule amendments. We then revised the draft and published proposed amendments to subpart E (64 FR 1880, January 12, 1999). We received ten detailed sets of public comments on the proposal. The issues raised by commenters, and our responses, are discussed in sections II, III and IV below.

In a related effort, we have worked closely with the California Air Resources Board (CARB) and the California Air Pollution Control Officers Association (CAPCOA), as well as California industry and environmental groups, to integrate the existing California air toxics programs with the Federal program. The goal of the ''California Initiative'' has been to establish a framework for evaluating alternative requirements, making timely equivalency determinations, and using resources efficiently. The framework will also aid in identifying and correcting circumstances where sources have to comply with duplicative requirements on the same emission points. The framework and guidance is intended to complement and facilitate compliance with subpart E requirements.

The current revisions to subpart E have benefitted greatly from this initiative. We have improved our understanding of the kinds of provisions that can be deemed equivalent to the MACT standards.

II. Summary of Major Issues

Although the January 1999 proposal to amend subpart E identified options for obtaining delegation and making equivalency determinations, nine of the ten comments received from S/L/Ts argued for even more flexibility in this process. In general, commenters believed that the delegation process was still too burdensome to be useful. They also believed that it did not go far enough toward accommodating existing S/L/T rules and requirements that differ structurally from Federal standards. (An example of the latter would be ''risk-based programs'', which establish emission limitations on specific facilities based on the health risks posed.) S/L/T requested simpler and shorter review processes for each delegation option, and a broader list of regulatory authorities that would be available under each option.

We have streamlined the equivalency review processes to make it easier for S/L/Ts to use these delegation options. In particular, we have eliminated specific steps in the review processes for the Equivalency by Permit (EBP) and State Program Approval (SPA) options, discussed in more detail in section III.

A. Enforceable Mechanisms

The greatest difference between the proposed rule and today's final rule is the variety of enforceable mechanisms that are now available under each equivalency option. Mechanisms such as S/L/T rules, S/L/T permits, or Title V permits can be used in a variety of delegation options so long as (1) they include, in sufficient detail, the terms and conditions necessary to establish equivalency, and (2) those terms and conditions can be made federally enforceable through public review and EPA review and approval. Table 1. summarizes the mechanisms we now allow under each option (these are discussed in more detail in section III).

TABLE 1.—ENFORCEABLE MECHANISMS AVAILABLE UNDER SUBPART E EQUIVALENCY OPTIONS

Option and authorities allowed	Mechanism
63.92—Rule Adjustment	• Title V permits. • Title V general permits. • Federal New Source Review (NSR) permits. • S/L/T rules.
63.93—Rule Substitution	• Title V permits. • Title V general permits. • Federal NSR permits. • Board and administrative orders. • Permits issued pursuant to permit templates. • S/L/T permits. • S/L/T rules.
63.94—Equivalency by Permit (EBP) Process	• Title V permits. • Title V general permits.
63.97—State Program Approval (SPA) Process	• Title V permits. • Title V general permits. • Federal NSR permits. • Board and administrative orders. • Permit issued pursuant to permit templates. • S/L/T permits. • S/L/T rules.

B. S/L/T Risk-Based Programs

The S/L (S/L is used to represent State and Local Programs in this section instead of S/L/T because comments were submitted by State and Local Programs only) had two major categories of comments regarding substituting their risk-based air toxics requirements for Federal section 112 requirements: One, substituting S/L risk-based programs for Federal requirements was too difficult using the SPA option and, two, S/Ls are concerned that they would not be able to use the subpart E substitution options to demonstrate that their risk-based programs are equivalent to EPA's future risk-based programs such as requirements which would be issued under the residual risk provisions (section 112(f)) and the risk related aspects of the urban air toxics program provisions (section 112(k)) of the Act. We recognize that S/Ls have, in some cases, established risk-based air toxics programs and would like to continue to implement and enforce these programs in lieu of Federal section 112 requirements. We believe we have addressed the major S/L comments and concerns in two rule modifications.

Some S/L contended that the section 112(l) provisions promulgated as 40 CFR Part 63, subpart E in November 1993 did not allow them to retain their existing risk-based programs. Subpart E required that the S/Ls who used the SPA option (§ 63.94) would need to write their risk-based, air toxics' permit terms and conditions in the form of the Federal standards which are technology-based, and therefore difficult for S/Ls to fit risk-based requirements into. S/L argued that this was of little benefit to them because of the work it would take to make the conversions to the form of the Federal standard. We agreed with their concern and have amended the SPA option so as not to require their permit terms and conditions to be in the form of the Federal standard.

The concern of the S/L pertaining to risk-based programs was that we are now developing policies, guidance, and regulations that would be based in part on health and/or risk evaluations (residual risk requirements of section 112(f) and urban air toxics program requirements of section 112(k)), to supplement our MACT program. More specifically, they are worried that subpart E would not allow them to substitute their existing risk-based requirements for our future requirements that are likely to also be based at least in part on risk. The EPA agrees that section 112 authorizes the Administrator to promulgate requirements other than technology-based MACT standards, and that subpart E should permit substitutions of S/L/T risk-based requirements for Federal risk-based requirements. Please note that EPA is currently in the process of developing policies, guidance, and regulations to implement the residual risk and urban air toxic requirements of the Act and we do not at this time know with any specificity what those requirements will be in the coming years. As a result, we may need to further revise subpart E in the future to aid the S/L/Ts in easily substituting their programs for our Federal risk-based program once those programs have been developed.

C. Other Section 112 Programs

The Act provides a two-step process for addressing control of HAPs. Over the last 10 years, we have focused on developing Federal control technology-based standards to achieve broad reductions in HAP emissions. We are now moving to the second step of evaluating residual risk to determine whether additional standards are needed to protect public health with an ample margin of safety. Although the process and methodology for these evaluations is still under development, we believe that it is appropriate to provide, through this rule, a mechanism by which S/L/Ts can accept delegation of, and/or substitute their programs for our risk-based program. We believe that we have written these options broadly enough that they will allow substitution of many S/L/T requirements for the Federal standards developed under the residual risk and urban air toxics programs.

D. Work Practices

One overarching issue that arose during the California Initiative project is the delegation of authority to approve site-specific changes to work practice authorities. Many MACT standards contain work practice measures such as requirements to keep solvent-soaked cleaning rags in closed containers at aerospace facilities, or to provide operator training for persons spraying varnish on wood products at wood furniture manufacturing facilities. The question is whether the authority to make site-specific decisions about work practices can be delegated to S/L/Ts. Some of the MACT standards do not explicitly say whether S/L/T can make site-specific decisions regarding changes to these work practices. Further, some of these work practices were developed in lieu of emission standards under section 112(h) of the Act, which requires us to retain the authority to approve alternatives. We have addressed this issue by splitting the work practices into (1) those for which we would retain the authority to approve alternatives (which would require us to conduct rulemaking with a public comment period), and (2) those for which we would delegate the authority to approve alternatives (which would not require an EPA rulemaking). For a more-detailed discussion of this subject, see section IV below.

E. Delegation of Authorities

Another issue addressed in comments on the proposed rule concerns delegation of the Administrator's authority to approve an individual source's use of alternatives to certain types of requirements in MACT standards, as set forth in 40 CFR Part 63, subpart A (the General Provisions). The proposed rule addressed which source-specific discretionary authorities we may and may not delegate to S/L/Ts through ''straight'' delegation of the General Provisions. In the final rule, we are making a change to the lists of ''delegable'' and ''non-delegable'' authorities. Specifically, we now allow delegation, to S/L/Ts, of the Administrator's authority under § 63.10(f) to make minor changes to reporting and recordkeeping requirements.

We have also clarified that approval of changes to monitoring frequency must be addressed under § 63.8(f), changes to monitoring, not under § 63.10(f). This issue is discussed in detail in section IV.B below.

III. How Do the Revised Delegation Options Work?

A. Section 63.91—Criteria for Straight Delegation and Criteria Common to all Approval Options

The purpose of § 63.91 is twofold: To explain the process for straight delegation, and to describe the common up-front approval criteria that apply to all of the approval options. Straight delegation means the S/L/T will implement and enforce the Federal MACT standards as we have written them, without any changes. The approval process under § 63.91 consists of notice and comment rulemaking in the **Federal Register**, and is described in greater detail in separate guidance. We have made several changes to § 63.91 to clarify our intent and provide additional flexibility. With this preamble we have also provided additional guidance on how these requirements will work. See Appendix 1 to the preamble for a flow chart describing the § 63.91 delegation process.

1. Format Changes To Clarify Intent

We received comments asking us to separate straight delegation requirements from the requirements regarding alternative S/L/T rules or programs. While we did not separate these requirements into other sections of the rule, we have revised the format of § 63.91 to make it easier for readers to find and interpret the requirements they need. Specifically, we have identified which requirements are related to the straight delegation process alone and which requirements are common to all of the approval options. We have reorganized the section, added more descriptive section titles, and made broader use of tables to improve the clarity of the requirements.

2. Approval Criteria for Straight Delegation/Up-front Approval for Alternatives

a. *Straight delegation.* We have clarified our intent that approval of your Title V program should satisfy the § 63.91 approval criteria. In many cases you received your up-front approval under subpart E at the same time you received your Title V program approval. If this is not the case, you should be able to request subpart E delegation with a letter to your EPA Regional office requesting the delegation and referencing your previous Title V showing. The Region would then issue a **Federal Register** notice approving the subpart E delegation.

b. *Alternatives.* Some commenters were concerned that the general approval criteria for the various equivalency demonstration options (*e.g.*, §§ 63.94 or 63.97) may include redundant demonstrations of the § 63.91 general approval criteria. This is not our intent. We have changed the final language in § 63.91(a) to clarify that only one showing of the § 63.91 criteria is needed.

3. Who Accepts Final Delegation

Commenters pointed out that there can be a difference between the agency that submits a request for an equivalency demonstration and the agency that actually accepts delegation of the approved alternative rule. (This may only be a problem in one State.) We believe that the intent of section 112(l) is to approve alternatives as part of a delegation. However, we encourage agencies in this position to work together to avoid duplicative effort. We encourage districts to bundle submittals together before sending them to EPA; we could then issue **Federal Register** notices that combine approvals for multiple entities.

4. Accepting Straight Delegation Via Title V

Commenters asked us to clarify that the straight delegation option should include delegation via a S/L/T Title V operating permit program, and we agreed. In other words, we may delegate to you the authority to implement MACT standards directly through issuance of Title V permits to sources, without the need for you to adopt State rules requiring MACT. Because of the nature of the operating permit program, however, there are several issues related to the use of this mechanism that must be separately addressed and resolved.

The first issue is whether your statutes, regulations, and other requirements contain the appropriate provisions granting authority to implement and enforce the State rule or program upon approval. We have added clarifying rule language in § 63.91. At a minimum, if you request delegation using your permit program, you should submit a letter (1) indicating which statutory, regulatory, or other provisions satisfy § 63.91, and (2) requesting the delegation.

Second, implementing and enforcing MACT standards through the part 70 operating permit program raises timing issues; in particular, the timing of the delegation of a particular MACT standard to you. In order to assure that affected sources are in compliance by the MACT standard's compliance date, their operating permits must be issued and/or modified to reflect the necessary permit terms and conditions for the MACT standards before that date. Both initial notifications and applicability determinations need to be made prior to the compliance date. You must assure us that you will implement and enforce the MACT standards prior to the compliance date.

If you use permits as a mechanism for any of the approval options provided in this rule, you should recognize that implementing MACT standards through Title V permits will require you to thoroughly review permits to ensure that their terms and conditions adequately reflect MACT requirements. The origin of each permit term or condition must be clear. Therefore you must reference the **Federal Register** notice in which we have approved the alternative.

You must also ensure that when permits are renewed or revised, the terms and conditions that implement the MACT standard(s) are carried forward. Later, if for any reason the permit is not renewed, the source must still comply with the Federal MACT standard. If any permits that have already been issued do not adequately reflect MACT requirements, then they must be revised prior to delegation. Also, if Title V permits are used as the approvable mechanism, then the source must always have a Title V permit, even if it later becomes a minor source of HAP emissions.

There may also be cases where the sources covered by a MACT standard are not covered by the Title V program (*e.g.*, area sources that are exempt from the requirement to obtain a Title V permit). You must assure us that you can implement and enforce the MACT standards for those sources who do not have a Title V operating permit.

Another issue you must address before taking straight delegation via Title V permits involves new sources. For example, it could take up to a year for a new source to receive its operating permit, and such a gap in compliance would make your delegation request unapprovable. You need to assure us that new sources will be issued permits as soon as possible, and that you will implement and enforce the MACT standard requirements before issuance of the operating permit.

You can also accept straight delegation of the MACT standards through federally enforceable State operating permits (FESOPs) or through Federal NSR permits, as long as you meet the same conditions discussed above for Title V operating permits. At a minimum, these permits must be federally enforceable.

5. Approval Time Frame for Straight Delegation

Commenters on this option requested that we shorten the time frame for approving straight delegations. We agree that in many cases, the full 180 days would not be needed for the review and approval of the delegation, and publication of the **Federal Register** notice. Our aim is to confer approval as soon as possible. Most EPA Regional offices have established straight delegation procedures, and work closely with S/L/Ts to approve delegation mechanisms in advance. In these cases, straight delegation could be conferred by letter. However, where rulemaking is required, we may need the full 180 days.

In addition, the EPA Regional office has authority to decide when officially to delegate each MACT standard to you. We may delegate a MACT standard to you either (1) for all sources in a source category at once, after all sources in the source category have received permits; or (2) source by source as permits are issued.

6. Subsequent MACT Standard Revisions

Commenters asked for a simple way to implement amendments to MACT standards in cases where we have already delegated alternative MACT requirements to you. We have revised the final regulation to limit the effect, on already-delegated MACT standards, of amendments that decrease the stringency of the MACT standard. When the change is limited to administrative or procedural changes or is clearly less stringent, no changes are required at the S/L/T level unless those agencies or their affected sources request a change.

We have amended the rule (§ 63.91(e)(3)) to require that we notify you of MACT standard amendments that are more stringent and that would affect your delegation. (Note that we are not referring here to residual risk standards issued under section 112(f); only to amendments specific to MACT standards issued under 112(d) or 112(h)). In the absence of such a notification, no action on your part is required. If action is required, we will work with you on a case-by-case basis to determine a time frame to make the changes to your requirements. We believe this flexibility is needed because we cannot forecast the complexity of possible future changes to MACT standards.

Based on our current experience, most amendments to MACT standards are limited and do not result in an increase in stringency. For example, we may amend a MACT standard to allow for the use of an alternative monitoring procedure, which does not increase the stringency of the remaining requirements. In cases where the stringency increases through the addition of emission sources to be controlled or tightening of the standard or monitoring, recordkeeping and reporting requirements (MRR), we often provide a time frame for sources to follow in complying with the new requirements. We expect that this time frame will allow sufficient time to also amend any necessary delegations or equivalency demonstrations.

7. Delegable Authorities

In the proposed rule, we included a list of the subpart A General Provisions authorities that we would agree to delegate to you. We also provided a list of those authorities to be retained by us. We received comments that we should not codify these delegations in the subpart E rule. Commenters argued that delegation issues should be handled through policy guidance rather than through rulemaking, so that any future changes to the policy could be made more easily. However, we believe that it is important to continue listing these authorities in subpart E to clarify what is delegable in a common forum that is readily accessible. These authorities are found in § 63.91(g) of the final rule.

Commenters also suggested that we delegate authority for day-to-day management of many decisions to you, so that we can focus on issues with greater emission reduction impacts. They also asked us to expand the list of authorities that would be delegable, in order to ensure there is a simple and expeditious process for you to approve alternative compliance and enforcement measures. In response to these concerns, the final rule now allows the authority to approve minor reporting and recordkeeping requirements to be delegated, and we have clarified how changes to monitoring frequency should be handled. We have also codified new definitions for major, intermediate, and minor changes to monitoring, as well as major, intermediate, and minor changes to test methods. These issues are discussed in detail in section IV.B below.

8. Enforcement

Throughout this preamble, we state that S/L/T rules or programs may be implemented and enforced in place of, or in lieu of, certain otherwise applicable section 112 Federal rules. This means that your rules and programs can completely, or partially, replace our section 112 Federal rules. Nothing in this language is intended to suggest that your S/L/T enforcement agencies have replaced our Federal authority to enforce modified or substituted rules or programs approved under this section or any other section. On the contrary, we want to be very clear that although we are allowing your rules and programs to replace our Federal rules, we always retain the right to enforce and implement these rules. Even if we delegate the enforcement of unchanged Federal 112 standards to you, we will remain partners with you in that enforcement.

We are aware that a recent Resource Conservation and Recovery Act (RCRA) court decision determined that EPA gave up our authority to enforce when we approved a S/L/T enforcement program ''in lieu of'' the Federal program. However, this decision does not apply to the Act. Although the RCRA decision is being appealed, we believe that even if it is upheld, Section 112(l)(7) of the Act allows us to always enforce our Federal rules, including the S/L/T rules or programs that are substituted for our Federal rules and become the Federal rules.

Even if you take an enforcement action against a particular source for violations of section 112 rules, we may also take an enforcement action, where we deem that appropriate. In most instances, we will be working together as partners, coordinating our efforts so that this ''overfiling'' situation will not arise. However, in cases where the penalties you have obtained do not satisfy our understanding of what is an appropriate penalty, we may seek additional penalties and other relief.

9. More Than One Equivalency Option

There has been some confusion over whether a S/L/T could use more than one equivalency option to take delegation of the sources in a given source category covered by a section 112 rule or requirement. In general, if a S/L/T submits alternative requirements for a subset of the source category under one option, such as rule substitution, it cannot request delegation for the remainder of sources under another option, such as straight delegation. This does not mean that the S/L/T request for equivalency cannot contain a mixture of allowable enforceable mechanisms, however. For example, the equivalency request could be based on a State rule for the majority of requirements and permit or other requirements for the remainder. Once the equivalency request is approved, all sources must comply with the approved requirements.

The exception to the limit on the number of delegation options is if the S/L/T used the EBP option to obtain approval of alternative requirements for a subset of sources in a source category. In this case, the S/L/T must request delegation of all of the remaining sources using just one other approval option, such as straight delegation. See section III.D for more discussion of this issue.

B. Section 63.92—Approval of S/L/T Requirements That Adjust a Section 112 Rule

Under the Rule Adjustment option in § 63.92, we can approve your requirements that are structurally very similar to, and clearly at least as stringent as, the Federal rule(s) for which you want to substitute those requirements. Under this option, you may only make an adjustment to a Federal rule that results in emissions limits and other requirements that are clearly no less stringent, for each source, than the Federal rule. There can be no ambiguity regarding the stringency of any of the proposed adjustments.

Section 63.92 includes a list of rule adjustments that may be approved under this option—for example, changing a required emission rate on a required control technology from 95-percent control to 98-percent control, or increasing the monitoring requirements. We consider all of these adjustments to result in requirements that are more stringent than the corresponding Federal requirements. (Note, however, that if the MACT requirement is simply a performance standard (e.g. 95-percent control out of the stack) as opposed to a specific required control technology, and your corresponding requirement is a more stringent performance standard (such as 98-percent control), you do not need to submit your alternative under section 112(l). You are already complying with the MACT standard.)

Under the rule adjustment option you would need to demonstrate that your requirements had undergone public notice and provided an opportunity for public comment in your jurisdiction before you submit it to us. Upon approval, your alternative requirements would be published in the **Federal Register** and incorporated directly or by reference into part 63, without additional notice and opportunity for comment.

As discussed in section II, we have expanded the list of approvable mechanisms under § 63.92 to include Title V permits, Title V general permits, and Federal NSR permits, in addition to rules. We make clear in the rule that permits submitted under § 63.92 must be final permits, not draft permits. Only permits that have already been issued can be used to demonstrate equivalency. Also, once we approve an alternative requirement in a permit or permits, the facility cannot change or withdraw its permit without affecting its equivalency status.

We believe these mechanisms all provide adequate notice and comment opportunities to the public in order to qualify for the relatively streamlined rule adjustment process. We note, however, that just because a mechanism is included under rule adjustment, it is not automatic assurance that you will always be granted equivalency. For example, not every lowest achievable emission rate (LAER) or NSR determination could be classified as an adjustment, unless the control technologies and associated compliance measures were clearly no less stringent than the MACT. When a different control technology also results in different MRR, it may not be obvious that the NSR compliance and enforcement measures are clearly no less stringent. In this case, rule substitution or SPA may be the more appropriate option for your submittal.

As described in the following sections, we have added to the list of allowable ''adjustments'' and shortened the review time frame. See Appendix 1 to the preamble for a flow chart describing the § 63.92 delegation process.

1. Additional Rule Adjustments Allowed

Commenters pointed out that subpart E apparently lacks a mechanism to accommodate minor, nonsubstantive differences (editorial, formatting, clarifications) from the MACT standard. In considering this issue, we determined that the rule adjustment option should logically include such changes as allowable adjustments. An example of a minor, nonsubstantive adjustment may be a change in the name of an administrator under an alternative or a change in the numbering/labeling scheme of the rule. We would expect to process these changes quickly.

We have also added a provision that allows you to submit requirements identical to the provisions approved elsewhere in the same State, which we have previously determined to be equivalent under subpart E. We made this change to accommodate cases where one local agency might receive approval of an alternative based on a permit template under rule substitution, for example, and another local agency wants to adopt the same requirements in its jurisdiction.

2. Approval Time Frame

Commenters asked that we reduce the 90-day approval time frame. In general, we will make every effort to process alternatives as quickly as possible. If the alternative requirement is ''unequivocally no less stringent,'' then we believe a 60-day approval period would be appropriate and we have changed the final rule to reflect the shorter time frame. We have also agreed that the approval can be deemed effective upon signature, rather than waiting for publication in the **Federal Register.** We will provide more information on how this could work in forthcoming guidance.

However, you should recognize that there may be situations where we can not consider your alternative under the rule adjustment option and would have to consider it under the rule substitution option. This could occur in the following situations:

- The information you provide us is not sufficient to determine whether the alternative requirement is ''unequivocally no less stringent,'' or
- The submittal is too complex for us to evaluate within the 60-day time frame of the rule adjustment option.

If we must consider your submittal under the rule substitution option instead of the rule adjustment option, we will inform you of this change and you would not have to resubmit your request (although you may need to submit additional supporting information).

C. Section 63.93—Approval of S/L/T Requirements That Substitute for a Section 112 Rule

Under § 63.93, substitution of requirements (which is commonly referred to as the Rule Substitution option), we can approve substitution of one (or more) of your rules or requirements for a Federal rule, where your rule is structurally different from the corresponding Federal rule. Under this section, we also may approve a rule that is different from the Federal rule in ways that do not qualify for approval under § 63.92—that is, in ways that are not ''unambiguously no less stringent.'' This situation might arise when you submit a rule that was written independently of the Federal rule or when, for example, your rule achieves equivalent emissions reductions, but with a combination of levels of control and compliance and enforcement measures not addressed by the Federal rule. Upon receipt of a complete request for approval of a substituted requirement, we would conduct a rulemaking to request public comments. If we approved your requirement we would then publish it in the **Federal Register**, and incorporate it directly or by reference into part 63 as federally enforceable. Any rules or other requirements that you submit under this section must be enforceable under your State law.

You may submit alternatives for an equivalency determination developed from any or a combination of the following mechanisms:

- Title V permits,
- Title V general permits,
- Federal NSR permits,
- Board and administrative orders,
- Permits issued pursuant to templates,
- S/L/T permits, or
- S/L/T rules.

Note that the mechanisms listed above submitted under § 63.93 must be final, not draft. Only permits, permit templates, or board and administrative orders or rules that have already been issued can be used to demonstrate equivalency. Also, once we approve an alternative requirement in a permit or

permits, you cannot modify that requirement.

If new sources apply for permits after equivalency has been approved, you must review those submittals to ensure equivalency with the MACT standard. Also, if a source wishes later to change approved permit terms and conditions at the time of permit renewal, or when making changes at the source, we must, of course, also review those new terms and conditions to ensure equivalency with the MACT standard.

As discussed in section II, we have expanded and clarified the list of approvable mechanisms to provide additional flexibility to you in preparing your equivalency demonstrations. Because there is relatively more oversight in the review and approval process for rule substitution, we believe the complete menu of approvable mechanisms should be allowed under this option.

Commenters raised several issues with respect to the § 63.93 process. The major issues are discussed below, and the remaining issues are addressed in the Technical Document for Promulgation of Standards, found in the project docket. See Appendix 1 to the preamble for a flow chart describing the § 63.93 delegation process.

1. Review Period

Commenters suggested reducing the length of our review period from 180 to 90 days. They argued that EPA's substantive review of submittals should occur before formal submittal, in order to understand and resolve major issues. In this case, the official review should not require extensive amounts of time.

We have not changed the review period in the final rule because we expect to receive submittals under this option that range significantly in their complexity. For less complex equivalency submittals, we would intend to complete our review as quickly as possible to reduce the chance of dual regulation. However, we must reserve the ability to fully review more complex submittals, which could take up to 180 days. Therefore, we believe that the appropriate time frame for review should be determined by the relevant EPA Regional office, considering the complexity of the submittal, the Regional office's experience with similar submittals, and the Regional office's resource load. We expect that EPA Regional offices will want to work with you early in the process, and to process the equivalency determinations as quickly as possible. We encourage both you and the Regional offices to develop a submittal tracking system to ensure that equivalency requests are handled as expeditiously as possible. We also plan to provide additional implementation guidance to facilitate preparation of easily reviewed submittals and EPA review of those packages.

2. Approval Criteria

Commenters suggested that we establish a two-tier system for reviewing equivalency submittals under § 63.93. Specifically, they said we should distinguish between level of control requirements and compliance and enforcement measures. They argued that compliance and enforcement measures are less critical, but require disproportionately greater review resources. While we agree that it can be more difficult to determine the equivalency of compliance and enforcement measures, we do not believe this justifies a lower threshold for the determination. Section 110 of the Act requires that we ensure our rules are adequately implemented and enforced; therefore, it would be difficult to support this distinction. For more detail on how we intend to handle compliance and enforcement measures, please see the preamble to the proposed rule. 64 FR 1880, 1901–1903 (January 12, 1999).

3. Compliance Schedules

Section 63.93(b)(3) specifies that an equivalent alternative must ensure that each affected source is in compliance no later than would be required by the otherwise applicable Federal rule. Commenters suggested that we revise this requirement to instead ensure that the compliance schedule is ''sufficiently expeditious.'' We cannot agree with this suggestion because the compliance date is a ''bright line'' criterion in the equivalency demonstration. We cannot think of a way to define ''sufficiently expeditious'' that would not appear arbitrary and yet would still prevent potential abuses of changes in the deadline.

However, we realize that there may be some cases where a S/L/T rule may contain a compliance date that is only slightly beyond the deadline in the applicable MACT standard. We want to allow flexibility to approve these cases, taking into consideration the length of the time difference between two deadlines, the stringency of the rule, the expected emissions impact, etc. Therefore, we are revising this language to require S/L/T rules to assure compliance by affected sources ''within a time frame that is consistent with the deadlines established in the otherwise applicable Federal rule.'' We expect that this language will provide flexibility in limited situations without allowing large discrepancies in compliance deadlines between S/L/T rules and Federal rules.

D. Section 63.94—Equivalency by Permit (EBP)

The EBP option was added to subpart E in the proposed amendments. As proposed, this option would allow you to substitute alternative requirements and authorities that take the form of permit terms and conditions instead of source category regulations. This process provides a means of obtaining delegation without having to go through rulemaking at the S/L/T level to establish source category-specific regulations. See Appendix 1 to the preamble for a flow chart describing the § 63.94 delegation process.

1. Overview of the Equivalency by Permit Process

The EBP process comprises three steps. The first step (*see* 40 CFR 63.94(a) and (b)) is the ''up-front approval'' of your EBP program. The second step (*see* 40 CFR 63.94(c) and (d)) is our review and approval of your alternative section 112 requirements in the form of pre-draft Title V permit terms and conditions. The third step (*see* 40 CFR 63.94(e)) is incorporation of the approved pre-draft terms and conditions into specific Title V permits and the Title V permit issuance process itself. The final approval of the S/L/T alternative requirements that substitute for the Federal standard does not occur for purposes of the Act, § 112(l)(5), until the completion of step three. For a more detailed description of each of these steps, refer to the discussion at section VII.C.2 of the preamble to the proposed rule. *See* 64 FR 1880, 1901–1903 (January 12, 1999).

As we discussed in the proposal, the purpose of step one is three fold: (1) It ensures that you meet the § 63.91(b) criteria for up-front approval common to all approval options; (2) it provides a legal foundation for you to replace the otherwise applicable Federal section 112 requirements with alternative, federally enforceable requirements that will be reflected in final Title V permit terms and conditions; and (3) it delineates the specific sources and Federal emission standards for which you will be accepting delegation under the EBP option.[1]

At step one, we will go through notice and comment rulemaking to approve your EBP program allowing you to write

[1] Note that S/L/Ts may not implement the EBP option for individual sources or source categories that are not identified in step one. S/L/Ts would have to repeat the up-front approval process to add those sources to the EBP program.

source specific title V permit terms and conditions equivalent to Federal section 112 standards. We will amend 40 CFR part 63 to incorporate that approval. Once step one is completed, we have approved your program contingent upon your including, in Title V permits, terms and conditions that are no less stringent than the Federal standard. However, the requirement applicable to the source—and the ''applicable requirement'' for Title V purposes—remains the Federal section 112 requirement until the final Title V permit is issued. This is because we will not be able to confirm that your Title V permit terms and conditions will be no less stringent than the Federal standard until we see them written into the specific Title V permits. Moreover, before final delegation can occur, there must be an enforceable mechanism (in this case the Title V permit) containing the alternative requirements.

The actual determination that the alternative S/L/T requirements are equivalent to (or no less stringent than) the Federal section 112 standard is made during steps two and three, with final delegation of the Federal requirements occurring at the completion of step three. At step two, you submit pre-draft Title V permit terms and conditions to us for approval. At this step, you ask us to evaluate the terms and conditions that will be applicable to the sources identified in step one and to make a judgment as to whether those terms and conditions are as stringent as the Federal standard. We introduce the term ''pre-draft'' to mean a version of the part 70 operating permit prior to the ''draft'' (as defined in 40 CFR part 70) version. By reviewing an early or pre-draft version of the operating permit, we will be able to identify potential issues with the equivalency demonstration and address these issues prior to the normal operating permit review process. By configuring the EBP option this way, we believe we will be able to provide timely review and input to permitting agencies and, therefore, not slow the operating permit issuance process. The submittal must include a complete set of pre-draft permit terms and conditions, an identification of which terms contain alternative requirements and the supporting documentation for the equivalency demonstration. These documents all become part of the administrative record for our approval of the alternative S/L/T requirements under section 112(l)(5).

At step two, we make our equivalency determination, conditional upon our ability to review specific proposed Title V permits at step three to ensure that they incorporate the approved terms and conditions exactly as approved in step two. Steps two and three together satisfy the section 112(l) requirement that we review and affirmatively approve alternative requirements.

At step three, the pre-draft permit terms and conditions approved at step two are written into specific proposed and draft Title V permits, which then go through the regular Title V permit issuance process. Thus, there is an opportunity for EPA and public review of the alternative requirements at step three. All information provided to us during step two as part of your equivalency demonstration must also be made available to the public during the Title V public review period. How the permit terms and conditions are written at step three is integral to our final determination that your requirements are equivalent to the Federal standard and that the permit assures compliance with all applicable requirements.

If the requirements we approve at step two are changed when written into the final Title V permit at step three, the delegation cannot occur and the Federal standard continues to apply. Thus, EPA approval at step two in no way prevents later EPA action to ensure that permit terms and conditions are no less stringent than Federal standards. Such action could include EPA disapproval of specific Title V permits, the granting of a citizen petition requesting EPA to object to a specific Title V permit, permit reopenings after permit issuance, or corrective action at the time of permit renewal.

In summary, your EBP program is approved at step one; the Title V permit terms and conditions that will replace the Federal standard are approved at step two (contingent upon them being written into Title V permits in step three exactly as they were approved at step two); and the actual delegation to you to implement alternative requirements contained in a Title V permit occurs when the enforceable mechanism, the Title V permit, is issued after the EPA and public comment periods.

2. Challenges to an EBP Delegation

As discussed above, under the EBP approach, the actual delegation occurs at step three with the issuance of the Title V permit. Thus, each Title V permit represents an opportunity for the public to challenge the alternative S/L/T requirements for not being as stringent as the Federal standard. This is why all supporting documentation that you submit at step two in support of the equivalency demonstration must also be available to the public during step three, as part of the record for the permit proceedings. In addition to each permit representing an opportunity to challenge EPA's delegation of authority to you to implement a particular section 112 standard through alternative Title V permit terms and conditions, the public may also petition the Administrator to object to each Title V permit on the grounds that it does not assure compliance with the applicable requirements of the Act, in this case the relevant Federal section 112 standard.

Moreover, if the terms and conditions change between the draft and final permit stages, the public and EPA can challenge the permit after permit issuance. The EPA could reopen the permit for failure to assure compliance with all applicable requirements (*i.e.,* the relevant section 112 standard). The public could challenge the permit on the same basis; the public would have the right to do so even if the issue was not raised during the comment period because the grounds for the objection would have arisen after the public comment period. See Act section 505(b)(2); 40 CFR 70.4(b)(3)(xii).

Due to the permit-by-permit nature of delegations under the EBP option and the corresponding opportunity for challenge to the alternative S/L/T requirements with each permit, permitting authorities should weigh carefully the advantages and disadvantages of the EBP approach for particular source categories. The EBP approach may not provide the same certainty about the programmatic sufficiency of alternative S/L/T requirements as compared to approving delegations based on S/L/T rules. Delegations based on S/L/T rules achieve delegation for all sources within a source category in a single action; thus, there is a single opportunity for challenge and judicial review of the rules in State court, and of EPA's delegation action in Federal court.

Finally, the iterative nature of the approach may place greater resource demands on permitting authorities. For these reasons, permitting authorities might consider it more manageable to restrict the EBP approach to source categories with fewer sources, or to issue all Title V permits to sources within the same source category at the same time.

3. Revisions to Alternative S/L/T Requirements in Title V Permits

Under the EBP approach, the delegation to you of the authority to implement Title V terms and conditions in place of the Federal standard occurs during a process in which there is an opportunity for full public review and challenge, and an opportunity for EPA review and objection. The EPA and

public review process is essential because the EBP essentially allows a case-by-case determination of requirements that will substitute for the Federal section 112 standard. Both EPA and public review opportunities must also be available before any change to the Title V permit terms and conditions that are substituting for the Federal standard, since such changes would operate as a substitute for the Federal standard for a particular source. Thus, any revision to the Title V permit terms and conditions that substitute for the Federal standard must be processed as a significant modification under Title V. This is consistent with the current regulations governing revisions to Title V permits, which require that any change to a case-by-case determination of a standard be processed as a major modification with full EPA and public review. *See* 40 CFR 70.7(e)(2)(i)(A)(3).

4. Permit Streamlining

The proposal compared the EBP process to Title V permit streamlining under EPA's White Paper 2. (For guidance on permit streamlining, see our March 5, 1996 policy guidance document entitled ''White Paper Number 2 for Improved Implementation of The Part 70 Operating Permits Program,'' commonly called White Paper 2, which can be found on our website at http://www.epa.gov/ttn/oarpg/t5wp.html.) Through Title V permit streamlining, a source may choose to consolidate multiple applicable requirements into a single set of applicable requirements that assure compliance with each of the ''subsumed'' requirements to the same extent as would be achieved by having the source comply with each requirement independently. *See* 64 FR 1880, 1904–1905 (January 12, 1999). However, requirements that are subsumed under the streamlined requirements contained in the permit remain applicable. Thus, a source subject to enforcement action for violation of a streamlined applicable requirement could potentially also be subject to enforcement action for violation of one or more subsumed applicable requirements.

Streamlining is different from the EBP process for replacing the Federal section 112 standard with Title V permit terms and conditions pursuant to a section 112(l) delegation. Under the EBP approach, once the final Title V permit is issued and you receive delegation to implement those permit terms and conditions in place of the Federal standard, the Federal standard no longer applies.

The proposal noted that nothing prevents the approved alternative Title V permit terms and conditions from then being streamlined with other applicable requirements under the process and criteria provided in White Paper 2. However, because, under the EBP approach, the only location of the approved S/L/T alternative requirements is the Title V permit, the terms and conditions implementing those requirements must remain tangibly written into the permit.

5. Public Comments on EBP

Issues raised by commenters include expanding the list of approvable mechanisms, removing the limit on the number of permits that can be submitted under this option, accepting delegation for all sources in a source category, and identifying source categories as part of the § 63.91 approval process. These issues are discussed in more detail below.

a. *List of approvable mechanisms.* Commenters raised the issue of allowing the use of S/L/T permits and Title V general permits as part of the EBP option. We agree that Title V general permits should be allowed, as they carry with them the actual terms and conditions that would be imposed on sources through Title V implementation. However, we cannot allow the use of S/L/T permits under this option because we lack the clear understanding we have under Title V of how the S/L/T program will be implemented, and this understanding is a crucial element of the expedited review process under EBP. Therefore, we have limited the use of S/L/T permits to cases where they are based on: (1) An up-front program approval under the SPA option, or (2) under the rule substitution option, where there is an opportunity for you to make a more detailed showing and for EPA and the public to adequately review. The EBP option is limited to the use of Title V permits and Title V general permits.

Commenters also asked if we could expand the list of approvable mechanisms to include permit templates. Their reason for this request is that in some States, the State agency might submit a permit template for an equivalency demonstration, but a local agency would actually be the one to implement the template. They proposed a two-track process for addressing alternative requirements: permit templates (outside the part 70 process), and part 70 permits (Title V permits or Title V general permits).

We cannot approve the use of permit templates under the EBP option because permit templates often do not contain specific requirements needed to determine equivalency and because permit templates are not enforceable until written into actual permits. In addition, the limited time for review under EBP would not be adequate for this more complex situation.

b. *Up-front approval requirements.* Some commenters suggested removing the up-front approval requirements in § 63.94 on the grounds that these requirements are unnecessary and impractical. (These requirements include identification of specific sources, as well as the list of current and future Federal standards, for which you are requesting approval of alternatives under EBP.) The commenters reasoned that you are often unable to forecast future standards and possible specific sources for which you would seek delegation of your standards through the EBP option. They also worried that we were asking for a duplicate demonstration to the Title V demonstrations you have already made.

To clarify, if you have an approved part 70 program, then your submittal need provide only a listing of the sources and source categories that you are covering and your commitment to accept section 112(l) delegation. If source categories are added at a later time, then the submittal can be updated with a repeat of step one. The public must have the opportunity to comment on all source categories that you would propose to handle through an alternative process.

c. *Five-source limit.* Commenters objected to the proposed limit on the number of sources per source category for which you could request alternative requirements through the EBP option. They said the five-source limit was arbitrary, inappropriate, and severely limited the usefulness of the option.

We proposed the limit because we were concerned about the potential burden on the EPA Regional offices asked to review multiple permits under EBP. The EBP process was designed to streamline the review and approval process, and it could be overwhelmed by too many submittals or by submittals on complex MACT standards. Although we believe it is important to limit both the number of sources and the complexity of MACT standards allowed under this option to avoid overburdening the Regional offices, we appreciate the concern that limiting the number of sources may, somewhat arbitrarily, constrain the reasonable use of this option. Upon reflection, we believe the number of sources could be determined through agreement between you and your Regional office, such as through a Memorandum of Agreement

(MOA). We have changed the rule language to provide this flexibility.

d. *Accepting delegation of all sources in the source category.* Commenters said we should remove the requirement that you take delegation for all sources in a source category (including area sources, for example) when you implement EBP alternative requirements through the part 70 permitting process, because it could conflict with partial delegation under § 63.91. They argued that § 63.94(b)(1)(ii) would prevent those permitting authorities with limited resources from using the EBP option.

Commenters also argued that requiring you to take delegation for all sources in a source category could lead to unequal treatment among sources in larger source categories managed through other options. In addition, it would constitute a disincentive to use this option for non-Title V sources, since the more burdensome alternative delegation approaches must be followed. Commenters argued that this would delay the ability to resolve at least some issues through Title V, and could create unequal requirements between equivalent sources depending on whether the source is found at a facility that does or does not yet have a Title V permit.

The focus of delegation under section 112(l) has always been source category-wide rather than source-specific. Therefore, we will continue to require that even though you might use EBP for just a subset of sources in a source category, you must take delegation for all sources under that source category. The EBP option was not intended for larger source categories such as dry cleaners and chrome plating where there is a greater potential for inequity. Our decision to allow flexibility in setting a limit on the number of sources covered under this option, and to provide that the limit be set case-by-case through S/L/T and EPA Regional Office negotiation, will also help to resolve the question of inequity.

We agree that requiring you to accept delegation for all sources in a source category (including non-Title V sources) represents a disincentive for using the EBP approach for complex source categories and source categories with many sources. However, implementing requirements for non-Title V sources would be more appropriately addressed under the SPA option discussed in section G.

E. Section 63.95. Additional Approval Criteria for Accidental Release Prevention Programs

We received no comments during the public comment period on the section 112(r), Part 68 provisions contained in §§ 63.90 and 63.95 of the proposed rule. However, further experience with the risk management program and S/L/T's efforts to adopt an approvable program have led us to refine some of the § 63.90 and § 63.95 provisions to ensure a workable S/L/T-Federal partnership in delegating and implementing section 112(r) provisions.

Specifically, in § 63.90(d)(1)(iii) of the proposed subpart E rule, we proposed to retain the authority to add or delete requirements from Part 68, subpart G. Our thinking was that S/L/Ts should not have the authority to require additional and/or different reporting elements including chemicals, data, sources, etc. than what we are requiring in Part 68, subpart G.

In addition, the proposed language in § 63.95(b)(1) did not require S/L/Ts to include in their programs that covered facilities prepare and submit a Risk Management Plan (RMP). In fact, we indicated in the preamble to the proposed rule that EPA would not approve alternative S/L/T RMP requirements. We intended the Federal RMP requirement in Part 68, subpart G to remain in effect even in S/L/Ts with approved programs, so that there would be national consistency in RMP reporting. As explained in the preamble to the proposed rule, we have developed an electronic system for submitting and disseminating RMPs that will reduce paperwork burdens for facilities subject to Part 68 provisions as well as for the S/L/Ts and Federal agencies involved in the RMP program. However, for such an electronic system to work, RMPs must be submitted in a uniform format.

We now realize there are two logistical problems with the proposal's approach to the RMP requirements in Part 68, subpart G. First, many of the Federal RMP provisions in subpart G reference other Part 68 requirements to define what must be reported in an RMP. Except where a S/L/T adopts a risk management program by incorporating *all* of Part 68 by reference, retaining the Federal RMP requirement in a S/L/T with an approved program could create a discrepancy between the S/L/T's regulations and the Federal Part 68 reporting requirements. From a regulated facility's standpoint, it would be asked to prepare an RMP by reference to regulations that, in an approved S/L/T, no longer apply to it. Second, lack of a S/L/T RMP requirement could create enforcement problems. For example, S/L/T agencies would not have an RMP submission requirement to enforce, leaving enforcement of that requirement to us.

To address these problems, we believe that S/L/Ts must include an RMP requirement in the programs submitted for our approval. Further, for each of the section 112(r)-listed chemicals that an S/L/T is regulating, the S/L/T must require reporting of at least the same information in the same format as required under Part 68, subpart G. National consistency in RMP reporting of section 112(r)-listed chemicals is needed to preserve the viability and utility of EPA's electronic system for submitting and managing RMPs. In addition, the stringency of the Federal risk management program is, at least in part, a function of what must be reported in RMPs. For S/L/Ts to show that their programs are at least as stringent as the Federal program with respect to the section 112(r) chemicals they are regulating, their RMP requirement must collect at least the same information the Federal program collects. To avoid any potential discrepancies, the S/L/T would write its RMP provision to correspond with its own associated regulations.

We also recognize that S/L/Ts may want to establish more extensive RMP reporting requirements than the Federal program's. The S/L/Ts will decide if they want to include this additional information in their delegation package to EPA. Any additional information approved as part of the delegation package will be Federally enforceable. The S/L/Ts may seek additional information in RMPs without threatening the integrity of our electronic reporting system. We may or may not be able to include additional data elements in our reporting system; if we are not able to do so, the S/L/T can provide for separate reporting of the relevant information. Those S/L/Ts interested in having their additional reporting requirements included in the system should contact Karen Schneider of EPA's Chemical Emergency Preparedness and Prevention Office at (202) 260–2711. In any event, additional reporting requirements may be submitted to us and made Federally enforceable as part of an approved S/L/T program.

Moreover, we recognize that S/L/Ts may want to regulate more or fewer chemicals than the Federal program regulates. In some cases, S/L/Ts have sought or will seek approval through the section 112(l) process of a full or partial program covering more or fewer chemicals, respectively. We want to encourage S/L/Ts to seek delegation of the Part 68 RMP. As we proposed, we will approve S/L/T programs that cover fewer chemicals than the Federal program covers, so long as the S/L/T

accepts delegation of the entire section 112(r) program for that defined universe. The revised subpart E regulations issued today require that S/L/T programs include provisions corresponding to subparts A through G and § 68.200 of Part 68 for the federally-listed chemicals it regulates. With respect to RMPs, S/L/T programs must require, for Federally-listed chemicals, reporting of at least the same information in the same format as required under subpart G. Those S/L/Ts opting to cover additional chemicals or sources or to require additional reporting may submit such programs to us for approval. Our approval of a S/L/T program with such additional requirements will make those requirements Federally enforceable.

F. Section 63.96—Review and Withdrawal of Approval

The review and withdrawal-of-approval process in § 63.96 is intended to be used when we determine that you (the S/L/T) are not adhering to the conditions under which your rule(s), program, or requirements were approved. Although we are not changing the withdrawal process in today's rulemaking, we continue to believe that withdrawal of rule(s), program, or requirements may be considered in cases where S/L/T are not adequately implementing or enforcing their alternative rule(s), program, and/or requirements.

G. Section 63.97—Approval of a S/L/T Program That Substitutes for Section 112 Requirements

The SPA option is intended for S/L/Ts with mature air toxics programs with many regulations affecting source categories regulated by Federal section 112 standards. Under the SPA process you can seek approval for your program to be implemented and enforced in lieu of specified existing or future section 112 rules or requirements.

This option can eliminate the redundant review of generic requirements that apply to multiple source categories each time we review your alternative requirements for a new source category. It allows you to bundle regulations or requirements and submit them as a group for more efficient processing, or submit requirements arising from multiple S/L/T rules to substitute for requirements in a single Federal section 112 regulation. This option also covers section 112 requirements that we may develop in the future under other sections besides sections 112(d), 112(f), and 112(h), and it allows you to develop protocols to establish alternative compliance and enforcement strategies.

The SPA process consists of two steps. In the first step, you submit to us, and we then approve, your up-front program. Up-front approval involves assuring that you have adequate authorities and resources to implement and enforce your proposed alternative provisions, as well as informing us which source categories your program covers. The up-front approval takes place via notice and comment rulemaking in the **Federal Register** and may take a maximum of 90 or 180 days to complete, depending on the complexity of your submittal.

In the second step, you submit to us, and we approve, your specific alternative requirements. These alternative requirements may be submitted in the form of rules, permits, or requirements in other enforceable mechanisms for major and/or area sources but, as in § 63.93, they must be enforceable as a matter of S/L/T law before you can submit them for approval. Also, as in § 63.93, in step two of the SPA process, we approve your alternative requirements through notice and comment rulemaking in the **Federal Register.** This process, as proposed, will be completed within 180 days. See Appendix 1 for a flow chart describing the § 63.97 (SPA) delegation process.

In the January, 1999 proposed rule we further described the timing of the internal steps within the 90-day to 180-day maximum time allowed for each approval step. In the final rule, we have deleted those intervals (except for the minimum length of the public comment periods) in order to provide you with greater discretion in the process. (We have made similar changes in §§ 63.91, 63.93, and 63.94.)

Issues raised by commenters included the overall administrative burden of the SPA process, expansion of the list of approval mechanisms, the focus on source categories, the scope of section 112 rules that could be included, and the requirement to identify source categories in advance. These issues are discussed in more detail below.

1. Overall Burden

Commenters believed that the SPA process, as proposed, with two separate steps of EPA (and public) review and approval, contained too much administrative process and review time. They also suggested that even though we had eliminated the need for equivalency with the form of the standard, a source-category by source-category equivalency process is still too cumbersome and complex, and does not really provide a way for demonstrating that risk-based State programs, for example, are equivalent.

Because of these comments, we are considering making some broad changes to the SPA process. There are significant technical, legal, and policy issues which would need to be addressed in order to accommodate providing this additional flexibility. For example, in making technical assessments of whether a S/L risk-based program could or should substitute for the Federal requirements, significant issues in determining equivalency are anticipated. When EPA completes its review of these issues, should the review establish that the additional flexibility can be granted, then an additional notice and comment rulemaking would be needed because such changes to the current subpart E rule would not be a logical outgrowth of what we proposed to date. Therefore, we must propose any such changes separately. We do not want to delay the flexibility that we can now grant in the subpart E rule in order to address these issues. Therefore, in today's final rule, we are promulgating a SPA process similar to the process in the January 12, 1999 proposed rule, but with some additional flexibility and shortened review time.

In addition, we envision addressing the S/L request for additional flexibility in addressing HAP risks and for the ability to continue to implement their existing air toxics programs in other section 112, non-MACT programs. For example, the ''National Air Toxics Program: The Integrated Urban Strategy; Notice'' (**Federal Register,** July 19, 1999, pages 38727–38729) discusses the need for a S/L/T partnership in addressing the risk from air toxics in urban areas. That notice specifically discussed the extent of their existing programs and how the ''mature'' programs may be given the authority to address the section 112(k) (Urban Air Toxics Strategy) requirements. ''Those wanting flexibility note that risk reductions tailored to the local situation can be more effective than national solutions * * *'' We are now working with a stakeholder group to further discuss concerns with flexibility in our granting authority to S/L/T to address HAP risks in ''The Integrated Urban Strategy.'' In developing a final SPA process under section 112(l)(and in developing other associated section 112 programs), we will evaluate existing S/L/T programs' HAP risk reductions relative to HAP risk reductions for Federal section 112 programs.

2. Approval Mechanisms

The final rule contains an expanded list of S/L/T level regulatory

mechanisms that we consider to be approvable under the SPA option. For example, you may submit a mix of requirements in the form of S/L/T rules, S/L/T permits, permits issued pursuant to permit templates, board and administrative orders, Federal NSR permits, Title V general permits, or Title V permits. We feel comfortable allowing a broad list of mechanisms under SPA because the second step of the SPA process provides opportunity for EPA review of specific requirements such as permit terms and conditions. This change reflects comments that State agencies typically use a mixture of requirements in actual practice.

3. Source Category Focus

One commenter said that the SPA option should reflect a source-by-source basis rather than a source category-wide focus, because this would be more consistent with actual regulatory practices. However, we believe that if source-by-source changes are truly desired, then these requests should be made through EBP or through the part 63 General Provisions. The intent of subpart E is to delegate source category-wide rules, with appropriate exceptions (*e.g.,* partial approval). Even in the case of EBP, you must take delegation for the remaining sources in the source category using one of the other delegation options in subpart E. We need to make this exception because the EBP option is designed for a limited number of sources, and there may be other sources in the source category that are not covered by EBP.

4. Scope of Program Coverage

One commenter wanted us to allow the SPA option to be used for all HAP standards. Currently, the SPA option limits the equivalency process to (1) section 112(d), the MACT standards, (2) section 112(f), the residual risk standards, and (3) section 112(h), which are work practice standards. The commenter argued that expanding the SPA option to include any Federal standards controlling HAP emissions, such as section 112(k) (urban program), combination section 111 (new source performance standards or NSPS), section 112 standards, section 129 (solid waste combustion standards), and section 183 (Federal volatile organic compounds control measures), will meet the statutory requirements set forth by section 112(l). We have revised the applicable sections of subpart E to clarify that the delegation options are available for all section 112 authorities, which is consistent with section 112(l). At present, we have only issued standards under section 112(d) and 112(h) authorities, but as the section 112(k) and section 112(f) programs are developed, subpart E will be available for you to request equivalency of alternative rules. Section 112(l) does not provide the authority to address the other programs suggested by the commenter. In any case, sections 129 and 111 already have their own, separate delegation processes.

5. Identifying Source Categories in Advance

One commenter said we should not require S/L/T agencies to identify in advance the source categories and/or section 112 requirements for which they intend to substitute alternative requirements unless they can do so on a general basis. They feel that requiring specific identification of source categories is unnecessary so long as the public has a chance to comment on the specific alternatives developed under the approved program. We believe identification of source categories, to the extent possible, is important information. We do not require that the agency know the identity of all possible future source categories. The S/L/T agency can add source categories at a later time as the need arises, or alternatively, simply list up-front all source categories that might be included. Our key concern is that the public receive adequate notice of the addition of source categories to be considered under this option. We believe that the second **Federal Register** notice on the alternative requirements could also amend the up-front approval. Within this notice, the Region would inform the public that the S/L/T agency is adding one or more source categories.

IV. How Will EPA Determine Equivalency for S/L/T Alternative NESHAP Requirements?

A. Work Practice Standards and Requirements

One issue that arose during the California Air Toxics Program Integration Initiative is the delegation of authority to approve site-specific alternatives to the MACT-specific work practice requirements. In this discussion, we use the term ''work practices'' to refer to requirements in MACT standards that are developed in lieu of, or to augment, emission standards. A subset of work practices known as ''work practice standards'' are those work practices developed under section 112(h) of the Act. Section 112(h) requires us to develop design, equipment, work practice, or operational standards if it is not feasible to prescribe a HAP emission standard. This section also says that ''if after notice and opportunity for comment, the owner or operator of any source establishes to the satisfaction of the Administrator that an alternative means of emission limitation at least equivalent'' to the section 112(h) standard, then the Administrator can approve the alternative for use by the source. Based on this authority, we cannot delegate the authority to change actual standards developed under section 112(h). However, as a general principle, we believe we can delegate the authority to change some of the associated compliance and enforcement measures (*e.g.,* inspections, monitoring, reporting, and recordkeeping) associated with these standards.

In the California Air Toxics Program Integration Initiative we also determined that some work practices can be both (1) delegated to the S/L/Ts to make decisions on a site-specific basis, and (2) identified as needing less scrutiny during the equivalency demonstration development and review. Our goal was to define work practices in a way that was consistent for both purposes. We view these work practice authorities as somewhat similar to the 40 CFR Subpart A General Provisions' authorities, such as startup, shutdown, and malfunction plans. (Section 63.91(g) of this rule sets out which General Provisions authorities can be delegated to the S/L/Ts, and which we retain). We have tried to incorporate these ideas into the section 112(l) rulemaking as well.

When, in the absence of delegation, a source requests approval of an alternative to MACT requirements that are labeled as work practice standards under section 112(h), we must propose for public comment, and then promulgate, an approval or disapproval of that alternative on a source-specific basis. This can be a time-consuming process and we do not believe it is justified unless the scope of the change affects the section 112(h) standard or is otherwise nationally significant.

Instead, we believe there are work practice compliance measures, such as operator training plans, for which it is more reasonable for the S/L/T to evaluate potential alternative requirements. For example, some MACT standards require sources to develop operator training plans with specific elements to the plan. If a source wanted to use a different approach to operator training, such as a video course, we believe the S/L/T should be able to judge the adequacy of the alternative to achieve the underlying standard, which is to train operators to work in such a way as to minimize emissions.

Under the California Initiative, we have decided to divide work practices into those for which the authority to approve alternatives is delegable (because they are not actually 112(h) emission related standards), and those for which the authority to approve alternatives is not delegable. We cannot delegate standards developed under section 112(h), but we can delegate the authority to approve alternatives to their associated compliance and enforcement requirements. Upon review of existing section 112(d) rules, we found that some requirements have been identified as work practices, or mentioned as being developed under section 112(h), when they are really monitoring requirements or other compliance and enforcement requirements. We intend to clarify that these monitoring requirements are delegable under certain conditions as mentioned in Section II.

We have decided to provide guidance to explain these distinctions between the standards and their compliance and enforcement measures because many of the existing MACT standards were written using different formats and organization structures. This can make it difficult for the uninitiated to determine under which classification individual requirements fall. Currently, we can advise you that plans and training generally are delegable, but other practices that have a more direct impact on emissions are not delegable. We plan to correct those rule structure problems in future rulemaking. For the existing rules, we will focus on providing many examples of work practices for which the authority to approve alternatives is either delegable and non-delegable. Then, if any questions arise regarding work practices, we will work directly with permitting authorities to determine in which category the work practice in question falls. We will provide these examples and a more detailed explanation in forthcoming guidance on work practices. This guidance will also be useful to the Regional Offices in evaluating section 112(l) equivalency submittals that involve work practices.

B. Changes To Monitoring Frequency and Recordkeeping and Reporting

Through discussions with stakeholders, we have recognized that the proposed rule was not clear enough regarding the status of delegation of the Administrator's authority to approve changes in monitoring frequency. In particular, there has been confusion regarding whether changes to monitoring frequency are associated with the 40 CFR Part 63 General Provisions authority either: (1) To approve changes that the Administrator may make to monitoring under § 63.8(f) or (2) to waive or make changes that the Administrator may make to recordkeeping and reporting under § 63.10(f).

Section 63.10(b) states that recordkeeping involves maintaining ''files of all information required * * * recorded in a form suitable and readily available for expeditious inspection and review,'' (which is not the kind of requirement that we expect should be modified by us or you), but does not discuss the frequency of recording monitoring measurements. Because the concepts of recordkeeping and reporting are separate from the concept of monitoring frequency, it is appropriate to allow delegation of authority to approve certain changes to recordkeeping and reporting under § 63.10(f). (However, we note that recordkeeping and reporting requirements under Title V of the Act must still apply to all major sources—*i.e.,* that the records must be kept for 5 years and reports must be submitted at least twice per year.) If a MACT standard requires more frequent reporting than twice per year for major sources, this may be modified to no less than twice per year, on a site-specific basis, when justified, as discussed below.

The issue of monitoring frequency is appropriately addressed under § 63.8(f). In other stationary source rules and guidance (including those for 40 CFR Part 64, the Compliance Assurance Monitoring Rule), we clearly state that we consider monitoring frequency one of the four critical elements of monitoring. (These elements are indicator(s) of performance, measurement technique, monitoring frequency, and averaging time.) Because of the potential ambiguity of this issue in our proposal, we are making revisions to the final rule to clarify this. Also, we will be proposing to add a definition of monitoring to 40 CFR 63.2 (the 40 CFR Part 63 General Provisions) to include the four critical elements of monitoring. Our other revisions are discussed below.

The stakeholder discussions have also revealed the need for us to provide additional specificity on the types of changes to monitoring frequency that would be considered major, intermediate, and minor for the purposes of delegation of approval/disapproval authority to S/L/Ts (see § 63.91). We are providing this specificity by revising the definitions for major, intermediate, and minor changes to monitoring in § 63.90(a) to include specific examples of monitoring frequency changes. Major changes involving a continuous emission monitoring system (CEMS), continuous opacity monitoring system (COMS), predictive emission monitoring system (PEMS), or continuous parameter monitoring system (CPMS) as well as monitoring frequency changes involving leak detection and repair protocols (LDAR) will not be delegated to S/L/Ts. The categorization as major changes for changes in monitoring frequency for these monitoring approaches does not distinguish between those with an enforceable emission or operating limit and those with only a corrective action and reporting obligation.

The S/L/Ts at the discretion of the EPA Regional Office, may be delegated the authority to approve minor and/or intermediate changes to monitoring. Changes to monitoring frequency that fall into the category of intermediate changes to monitoring are those that are associated with non-continuous monitoring such as periodic parameter recordings, visual inspections of design features or work practices, and periodic portable analyzer emission checks. An increase in frequency for any type of data collection will be considered a minor change to monitoring. Indeed, you need not have received delegation of this authority to require an increase in frequency of monitoring, recordkeeping, or reporting, since that increase in requirements continues to satisfy the frequency required by the MACT standard. Such a more frequent requirement does not become Federally enforceable, without delegation, unless it is incorporated into a Federally enforceable instrument like a Title V permit or Federally enforceable state operating permit.

Consistent with all alternative test method and monitoring decision making, approvals of changes to monitoring frequency must meet the criteria in our existing guidance, the February 26, 1993, memorandum from Gilbert H. Wood to the EPA's Emission Measurement Branch entitled ''Handling Requests for Minor/Major Modifications/Alternative Testing and Monitoring Methods or Procedures Approvals and Disapprovals.'' Specifically, the delegated authority or EPA must make a determination that ''the change in the testing or monitoring method or procedure will provide a determination of compliance status at the same or higher stringency as the method or procedure specified in the applicable regulation.''

Regarding changes in monitoring frequency, we believe a special case that merits discussion here is the request for a decrease in monitoring frequency

supported with a significant amount of data demonstrating ongoing compliance with the applicable requirement. This type of data support along with the consideration of other factors may be adequate to justify the decrease in frequency. The amount of data we would consider adequate for this type of justification is 2 to 3 years worth with few or no exceedances of any associated applicable requirement or associated performance indicator, as well as steady-state operations. Other factors to be considered are (1) the compliance margin at which the source is operating and (2) the likelihood of continued steady-state operation of the control or process being monitored. A reasonable margin of compliance would be monitored results considerably below the applicable requirement or some such similar record relative to another type of performance indicator. The likelihood and degree of control failure versus the time period over which failure may occur should also be considered in relation to the monitoring frequency.

Once the delegated authority has determined that a decrease in frequency is reasonable, then the delegated authority must decide the magnitude of the decrease. Examples of acceptable step decreases might be from once per hour to once per shift, from once per shift to daily, from daily to weekly, or from weekly to monthly.

We believe that sources with significant data demonstrating operation well within the monitoring limit may merit a decrease in monitoring frequency; conversely, we believe that sources with significant or repeated operation exceeding the monitoring limit should be required to monitor more frequently. We expect S/L/Ts that have been delegated the authority to approve minor and intermediate changes to monitoring to require more frequent monitoring under these circumstances. Accordingly, the Regions will establish a requirement in their memoranda of agreement that delegated S/L/Ts periodically submit documentation of the cases where they have required more frequent monitoring.

As noted previously, commenters had requested that we consider delegating S/L/Ts the authority to approve certain changes to recordkeeping and reporting. We have determined that this is appropriate and have added definitions of major and minor changes to § 63.90(a). Recordkeeping and reporting changes are delegable so long as they are minor, as defined. We do not intend to delegate that all recordkeeping or reporting be waived, except in the circumstance where a compliance extension for the installation of controls has been granted. We do not allow alternative recordkeeping or reporting to essentially waive these requirements by so severely altering the contents of reports or records that their usefulness has been compromised.

We are willing to delegate the authority to approve small changes to recordkeeping and reporting where good cause if shown. By ''good cause'' we mean instances such as a facility shutdown, when there are no emissions, so it would make no sense to maintain the records of monitoring data, when all values would be zero, or some other meaningless value. We do not expect many changes to recordkeeping or reporting as we do not foresee many instances in which changes to the frequency of monitoring would necessitate a change to recordkeeping or reporting. Merely because a less frequent monitoring schedule has been approved, as cited in the example above, will not always, or even frequently, necessitate a change in recordkeeping or reporting. We consider any change to the record retention period, or the duty to maintain records on site and readily available, a major change which is not delegable.

Consistent with our previous guidance in the July 10, 1998, memo from John S. Seitz on ''Delegation of 40 CFR Part 63 General Provisions Authorities to State and Local Air Pollution Control Agencies,'' delegated authorities must forward copies of any approved intermediate changes to both monitoring and test methods to the Emission Measurement Center of the Emissions Monitoring and Analysis Division via mail or facsimile at the address below:

Chief, Source Measurement and Technology Group, U.S. EPA (MD–19), Research Triangle Park, NC 27711, Facsimile Telephone Number: (919) 541–1039

Similarly, you must maintain a record of any alternatives to recordkeeping and reporting that you have approved and must report semi-annually, or more frequently, as may be agreed upon by the Region and you, to your Regional office providing a copy of this record or other similar summary. A copy must also be forwarded to:

Chief, Stationary Source Enforcement Branch, U.S. EPA (Mail Code 2242A), Ariel Rios Building, 1200 Pennsylvania Ave., NW., Washington, DC 20460, Facsimile Number: (202)564–0068

We reserve the right to review or disapprove the MRR alternatives you submit. If the Region disapproves your approved alternative, it is not retroactive for enforcement. That is, the source is not in jeopardy or in violation for the period of time that they acted in accordance with what you approved. Rather the source must, after notice of EPA's disapproval, revert to whatever MRR requirement they had before you approved the alternative. (That could be the original MACT requirement, your Subpart E alternative rule or permit or other mechanism, or, if there was one, a non-disapproved alternative that you approved previously.)

As an example of the last suggestion, if you had previously approved a less frequent monitoring requirement, such that the source must monitor every two hours instead of every one hour, and EPA had approved or had not disapproved of that alternative, then the source could legally monitor every two hours. If you subsequently approved less frequent monitoring to every eight hours, but EPA disapproved that alternative, the source must, after it receives notice of EPA's disapproval, revert to monitoring no less frequently than every 2 hours. Your sources should not feel that they risk enforcement penalties unless EPA approves the alternative. Rather they should act in keeping with your approved alternative safe in the knowledge that until such time as the alternative MRR is disapproved, it is completely legal to follow your approved alternative.

We wish to retain this flexible mechanism for disapproving potential S/L/T MRR alternatives. This will ensure adequate compliance measures without the need to withdraw your entire program on the basis of one minor MRR disagreement. This is in keeping with the flexible withdrawal options discussed in section III.F.

We will use this information on approved changes to monitoring, test methods, and recordkeeping and reporting to compile databases of decisions that will be accessible for reference in making future decisions. The EPA Regional offices will ensure that: (1) Initial approvals made by an S/L/T of intermediate changes to monitoring, testing, recordkeeping, and reporting are evaluated, and (2) S/L/T-issued intermediate changes to test methods and monitoring, all EPA Regional office-issued intermediate changes to test methods, and all alternatives to recordkeeping and reporting are forwarded to the addresses above. We will continue to post EPA Regional office approvals of changes in monitoring, recordkeeping, and reporting on the Applicability Determination Index (ADI), which can

be found at http://es.epa.gov/oeca/eptdd/adi.html. For electronic file transfer procedures for ADI updates, please contact Belinda Breidenbach in the Office of Compliance at 202–564–7022.

The EPA Regional Offices will provide firm guidelines for decision making in the process of delegating Part 63 General Provisions authorities to the S/L/T. More specifically, delegation documents can draw on the language of this preamble; the July 10, 1998, memo from John S. Seitz, the February 26, 1993, memorandum from Gilbert H. Wood, and other guidance materials to provide S/L/T with guidance to ensure consistency in approvals.

C. Equivalency for S/L/T Requirements Established Under New Source Review/Prevention of Significant Deterioration (NSR/PSD)

Several commenters pointed out that we should be able to accept SIP-approved rules and associated compliance and enforcement measures without the need for demonstrating equivalency with the compliance and enforcement measures in the MACT standard. We cannot legally allow a blanket acceptance of SIP-approved rules and/or other S/L/T rules without adequate process under subpart E to ensure equivalence with the MACT standard. Furthermore, it is our experience that SIP-approved rules are not always equivalent to MACT standards. In some cases, SIP-approved rules exempt some compounds, such as methylene chloride, that are regulated by MACT standards. Nevertheless, we are committed to making every effort to expedite the review process when standards set under NSR are submitted. For example, we have shortened review time frames, expanded the list of approvable mechanisms, and provided additional flexibility in the subpart E equivalency process. We have also expanded the list of approvable mechanisms under the § 63.92 rule adjustment process to include Federal NSR permits, because we agree with the commenters that they can be clearly more stringent than MACT. In these cases, rule adjustment offers the most appropriate and timely option. In some cases, however, the NSR finding may not clearly be more stringent. For example, if the NSR finding adopts some novel technology with significantly different MRR needed to ensure compliance, the rule adjustment mechanism may be insufficient to ensure the needed equivalency. In this case, the S/L/T should consider either rule substitution or permit streamlining. Again, we will commit to making every effort to expedite the review process.

D. Title V Permit Renewal Issues

Commenters suggested specific changes to part 70 to ensure the expeditious implementation of alternative requirements under subpart E or subpart A (General Provisions). These suggested changes include:

- For sources with an approved part 70 permit addressing the Federal standard, alternative requirements approved using the permit or permit template mechanism should be incorporated into the part 70 permit as an administrative amendment, and alternative requirements approved using the rule equivalency mechanism should be incorporated into the part 70 permit as a minor amendment.
- For sources without an approved part 70 permit, approved alternative requirements should be incorporated into the permit in the same way as any other Federal NESHAP requirement; however, we should ensure that the review and approval of the alternative requirement is limited to whether the permit condition accurately reflects the alternative requirement approved under subpart E.

We interpret the comments to recommend certain changes to include in the part 70 revisions that we are developing, rather than how we should interpret the current part 70 rule. Generally, we expect to take the approach in the part 70 revisions that the part 70 permit process need not require our review and public review if a prior process has already provided it. Accordingly, if alternative part 63 requirements have been reviewed and approved by us by the start of the permit revision process, then the part 70 revisions would likely incorporate the alternative requirements into the permit through one of the permit revision processes without our review and public review, *i.e.*, the administrative, notice-only, or *de minimis* revision tracks. Conversely, if the alternative part 63 requirements have not been reviewed and approved prior to the permit process, and significant judgment would be involved in determining if the alternative requirements are consistent with promulgated part 63 requirements, then the part 70 revisions may require one of the permit revision tracks that have EPA and public review, that is, either the significant or minor revision tracks. In developing the final part 70 revisions, we plan to address the incorporation of alternative part 63 requirements into the permit, consistent with the approach described above.

V. What Are the Requirements To Review this Action in Court?

Under Section 307(b)(1) of the Act, judicial review of this final rule is available only by the filing of a petition for review in the U.S. Court of Appeals for the District of Columbia Circuit by November 13, 2000. Any such judicial review is limited to only those objections which are raised with reasonable specificity in timely comments. Under Section 307(b)(2) of the Act, the requirements that are the subject of this final rule may not be challenged later in civil or criminal proceedings brought by EPA to enforce these requirements.

VI. Administrative Requirements

A. Docket

The docket for this regulatory action is A–97–29, the same docket as the proposed rule, and a copy of today's final rule will be included in the docket. The principal purposes of the docket are: (1) To allow interested parties a means to identify and locate documents so that they can effectively participate in the rulemaking process; and (2) to serve as the record in case of judicial review (except for interagency review materials) (Section 307(d)(7)(A) of the Act). The docket is available for public inspection at the EPA's Air and Radiation Docket and Information Center, the location of which is given in the **ADDRESSES** section of this rule.

B. Executive Order 12866

Under Executive Order 12866 (58 FR 51735, October 4, 1993), the EPA must determine whether the regulatory action is ''significant'' and therefore subject to review by the Office of Management and Budget (OMB), and the requirements of the Executive Order. The Executive Order defines ''significant regulatory action'' as one that is likely to result in a rule that may:

(1) Have an annual effect on the economy of $100 million or more or adversely affect in a material way the economy, a sector of the economy, productivity, competition, jobs, the environment, public health or safety, or State, local, or Tribal governments or communities;

(2) Create a serious inconsistency or otherwise interfere with an action taken or planned by another agency;

(3) Materially alter the budgetary impact of entitlements, grants, user fees, or loan programs, or the rights and obligations of recipients thereof; or

(4) Raise novel legal or policy issues arising out of legal mandates, the President's priorities, or the principles set forth in the Executive Order.

Although this final rule will not have an annual effect on the economy of $100 million or more, and therefore is not considered economically significant, we have determined that this rule is a ''significant regulatory action'' because it contains novel policy issues. This action was submitted to OMB for review as required by Executive Order 12866. All written comments from OMB to the EPA and any written EPA response to any of those comments are included in the docket listed at the beginning of this notice under **ADDRESSES.** In addition, consistent with Executive Order 12866, the EPA consulted extensively with S/L/Ts, the parties that will be most directly affected by this rule. Moreover, the Agency has also sought involvement from industry and public interest groups as described herein.

C. Executive Order 13132 (Federalism)

Executive Order 13132, entitled ''Federalism'' (64 FR 43255, August 10, 1999), requires EPA to develop an accountable process to ensure ''meaningful and timely input by State and local officials in the development of regulatory policies that have federalism implications.'' ''Policies that have federalism implications'' is defined in the Executive Order to include regulations that have ''substantial direct effects on the States, on the relationship between the national government and the States, or on the distribution of power and responsibilities among the various levels of government.''

Under Section 6 of Executive Order 13132, EPA may not issue a regulation that has federalism implications, that imposes substantial direct compliance costs, and that is not required by statute, unless the Federal government provides the funds necessary to pay the direct compliance costs incurred by State and local governments or EPA consults with State and local officials early in the process of developing the proposed regulation. The EPA also may not issue a regulation that has federalism implications and that preempts State law, unless the Agency consults with State and local officials early in the process of developing the proposed regulation.

This final rule does not have federalism implications. It will not have substantial direct effects on the States, on the relationship between the national government and the States, or on the distribution of power and responsibilities among the various levels of government, as specified in Executive Order 13132, because it amends a voluntary program. Thus, the requirements of section 6 of the Executive Order do not apply to this rule. Nevertheless, in developing this rule, EPA consulted with States to enable them to provide meaningful and timely input in the development of this rule. Discussion of the concerns raised by States and EPA's responses to those concerns is provided throughout this preamble.

D. Consultation and Coordination With Indian Tribal Governments Under Executive Order 13084

Under Executive Order 13084, EPA may not issue a regulation that is not required by statute, that significantly or uniquely affects the communities of Indian tribal governments, and that imposes substantial direct compliance costs on those communities, unless the Federal government provides the funds necessary to pay the direct compliance costs incurred by the tribal governments, or EPA consults with those governments. If EPA complies by consulting, Executive Order 13084 requires EPA to provide to the Office of Management and Budget, in a separately identified section of the preamble to the rule, a description of the extent of EPA's prior consultation with representatives of affected tribal governments, a summary of the nature of their concerns, and a statement supporting the need to issue the regulation. In addition, Executive Order 13084 requires EPA to develop an effective process permitting elected officials and other representatives of Indian tribal governments ''to provide meaningful and timely input in the development of regulatory policies on matters that significantly or uniquely affect their communities.''

Today's rule does not significantly or uniquely affect the communities of Indian tribal governments. Because this rule implements a voluntary program, it imposes no direct compliance costs on these communities. Accordingly, the requirements of section 3(b) of Executive Order 13084 do not apply to this rule.

E. Paperwork Reduction Act

The OMB has approved the information collection requirements contained in this rule under the provisions of the Paperwork Reduction Act of 1980, 44 U.S.C. 3501 *et seq.*, and has assigned OMB control number 2060–0264. We have subsequently prepared a request (ICR 1643.04, which contains the basis for the burden estimates below) to extend the collection for an additional 3 years. You may get a copy of the Information Collection Request (ICR) from Sandy Farmer by mail at OPPE Regulatory Information Division, U.S. Environmental Protection Agency (2822A), Ariel Rios Building, 1200 Pennsylvania Avenue, Northwest, Washington, DC 20460, by email at farmer.sandy@epa.gov, or by calling (202)260–2740.

This information is needed and used by us to determine if the S/L/T government submitting an application has met the criteria established in the 40 CFR Part 63, subpart E amended rule. This information is necessary for the Administrator to determine the acceptability of approving the affected entity's rules or programs in lieu of the Federal rules or programs. The collection of information is authorized under 42 U.S.C. 7401–7671q.

The total 3-year burden of the collection is estimated at 390,600 hours. The estimated average annual burden is 130,200 hours, 1,025 hours per respondent, and 29 hours per response. We have estimated that 127 State/local agencies will request delegation of 35 MACT standards each using the various delegation options. In addition, the 127 agencies will use the accidental release prevention program on a one-time only basis during the first two years of the collection. The cost burden of this response is limited to the labor costs of agency personnel to comply with the notification, reporting, and record keeping elements of this rule. These costs are estimated at $16.0 million for the 3-year collection period and $5.3 million on average for each year of the collection period. There are no capital, startup, or operation costs associated with this rule.

Burden means the total time, effort, or financial resources expended by persons to generate, maintain, retain, disclose, or provide information to or for a Federal agency. This includes the time needed to review instructions, process and maintain information, and disclose and provide information; to adjust the existing ways to comply with any previously applicable instructions and requirements; to train personnel to respond to a collection of information; to search existing data sources; to complete and review the collection of information; and to transmit or otherwise disclose the information.

An agency may not conduct or sponsor, and a person is not required to respond to, a collection of information unless it displays a current OMB control number. The OMB control numbers for EPA's regulations are listed in 40 CFR part 9 and 48 CFR chapter 15.

We are amending the table in 40 CFR part 9 of currently approved ICR control numbers issued by OMB for various regulations to revise the list of information requirements contained in

this final rule. This amendment updates the table to list the information requirements being promulgated today.

We will continue to present OMB control numbers in a consolidated table format to be codified in 40 CFR part 9 of the Agency's regulations, and in each CFR volume containing EPA regulations. The table lists the section numbers with reporting and recordkeeping requirements, and the current OMB control numbers. This listing of the OMB control numbers and their subsequent codification in the CFR satisfy the requirements of the Paperwork Reduction Act (44 U.S.C. 3501, *et seq.*) and OMB's implementing regulations at 5 CFR part 1320.

F. Regulatory Flexibility Act (RFA)

The RFA generally requires an agency to prepare a regulatory flexibility analysis of any rule subject to notice and comment rulemaking requirements unless the agency certifies that the rule will not have a significant economic impact on a substantial number of small entities. Small entities include small businesses, small organizations, and small governmental jurisdictions.

The EPA believes that there will be little or no impact on small entities as a result of the promulgation of these rule revisions. State and local governments are the only entities affected by this action and EPA expects that most or all of the governments which would have the authority to accept delegation under section 112(l) of the Act are those whose populations exceed 50,000 persons and are thus, not considered ''small.'' Furthermore, this final rule revision adds additional flexibility to the existing rule for State and local governments and therefore does not impose new burdens. Accordingly, because few or none of the affected entities are expected to be small entities and because the regulatory impacts will be insignificant, I hereby certify that this rule will not have a significant economic impact on a substantial number of small entities.

G. Unfunded Mandates Reform Act

Title II of the Unfunded Mandates Reform Act of 1995 (UMRA), Public Law 104–4, establishes requirements for Federal agencies to assess the effects of their regulatory actions on S/L/T governments and the private sector. Under section 202 of the UMRA, we generally must prepare a written statement, including a cost-benefit analysis, for proposed and final rules with ''Federal mandates'' that may result in expenditures to S/L/T governments, in the aggregate, or to the private sector of $100 million or more in any 1 year. Before promulgating an EPA rule for which a written statement is needed, section 205 of the UMRA generally requires us to identify and consider a reasonable number of regulatory alternatives and adopt the least costly, most cost-effective or least burdensome alternative that achieves the objectives of the rule. The provisions of section 205 do not apply when they are inconsistent with applicable law. Moreover, section 205 allows us to adopt an alternative other than the least costly, most cost-effective, or least burdensome alternative if the Administrator publishes with the final rule an explanation why that alternative was not adopted. Before we establish any regulatory requirements that may significantly or uniquely affect small governments, including Tribal governments, we must have developed under section 203 of the UMRA a small government agency plan. The plan must provide for notifying potentially affected small governments, enabling officials of affected small governments to have meaningful and timely input in the development of EPA regulatory proposals with significant Federal intergovernmental mandates, and informing, educating, and advising small governments on compliance with the regulatory requirements.

This rule contains no Federal mandates (under the regulatory provisions of Title II of the UMRA) for S/L/T governments or the private sector. Because the rule is estimated to result in the expenditure by S/L/T governments of significantly less than $100 million in any 1 year, we have not prepared a budgetary impact statement or specifically addressed the selection of the least costly, most effective, or least burdensome alternative. Because small governments will not be significantly or uniquely affected by this rule, we are not required to develop a plan with regard to small governments. Moreover, this action amends a rule that is voluntary for S/L/T governments, so it does not impose any mandates on those entities. Therefore, the requirements of the Unfunded Mandates Reform Act do not apply to this section. Nonetheless, the EPA has encouraged significant involvement by State and local governments as detailed throughout this preamble.

H. Protection of Children From Environmental Health Risks and Safety Risks Under Executive Order 13045

Executive Order 13045 applies to any rule that EPA determines (1) economically significant as defined under Executive Order 12866, and (2) the environmental health or safety risk addressed by the rule has a disproportionate effect on children. If the regulatory action meets both criteria, the Agency must evaluate the environmental health or safety effects of the planned rule on children and explain why the planned regulation is preferable to other potentially effective and reasonable alternatives considered by the Agency.

This rule is not subject to Executive Order 13045, entitled Protection of Children from Environmental Health Risks and Safety Risks (62 FR 19885, April 23, 1997), because it is not an economically significant regulatory action as defined by Executive Order 12866, and because the Agency does not have reason to believe the environmental health or safety risks addressed by this action present a disproportionate risk to children.

I. National Technology Transfer and Advancement Act

Section 12(d) of the National Technology Transfer and Advancement Act of 1995 (''NTTAA''), Public Law 104–113, section 12(d) (15 U.S.C. 272 note) directs the Agency to use voluntary consensus standards in its regulatory activities unless to do so would be inconsistent with applicable law or otherwise impractical. Voluntary consensus standards are technical standards (*e.g.*, materials specifications, test methods, sampling procedures, and business practices) that are developed or adopted by voluntary consensus standards bodies. The NTTAA directs EPA to provide Congress, through OMB, explanations when the Agency decides not to use available and applicable voluntary consensus standards (VCS).

This rule does not involve technical standards. Therefore, we are not considering the use of any VCS.

The section 112(l) rule is merely a procedural screen through which substantive air toxics standards are delegated and is not susceptible to the use of VCS. If any of the Federal air toxics standards delegated through section 112(l) have VCS, then the section 112(l) rule will assure that the comparable S/L/T standard has equivalent requirements. The section 112(l) rule itself, however, is not a vehicle for the application of VCS.

J. Submission to Congress and the Comptroller General

The Congressional Review Act, 5 U.S.C. 801 *et seq.*, as added by the Small Business Regulatory Enforcement Fairness Act of 1996, generally provides that before a rule may take effect, the agency promulgating the rule must submit a rule report, which includes a

copy of the rule, to each House of the Congress and to the Comptroller General of the United States. The EPA will submit a report containing this rule and other required information to the U.S. Senate, the U.S. House of Representatives, and the Comptroller General of the United States prior to publication of the rule in the **Federal Register**. This action is not a ''major rule'' as defined by 5 U.S.C. 804(2).

VII. Statutory Authority.

The statutory authority for this action is provided by sections 101, 112, 114, 116, and 301 of the Act as amended (42 U.S.C. 7401, 7412, 7414, 7416, and 7601). This rulemaking is also subject to section 307(d) of the Act (42 U.S.C. 7407(d)).

List of Subjects

40 CFR Part 9

Environmental protection, reporting and recordkeeping requirements.

40 CFR Part 63

Environmental protection, Administrative practices and procedures, Air pollution control, Hazardous substances, Intergovernmental relations, Reporting and recordkeeping requirements.

Dated: August 30, 2000.

Carol M. Browner,

Administrator.

Appendix 1 to Preamble

BILLING CODE 6560–50–U

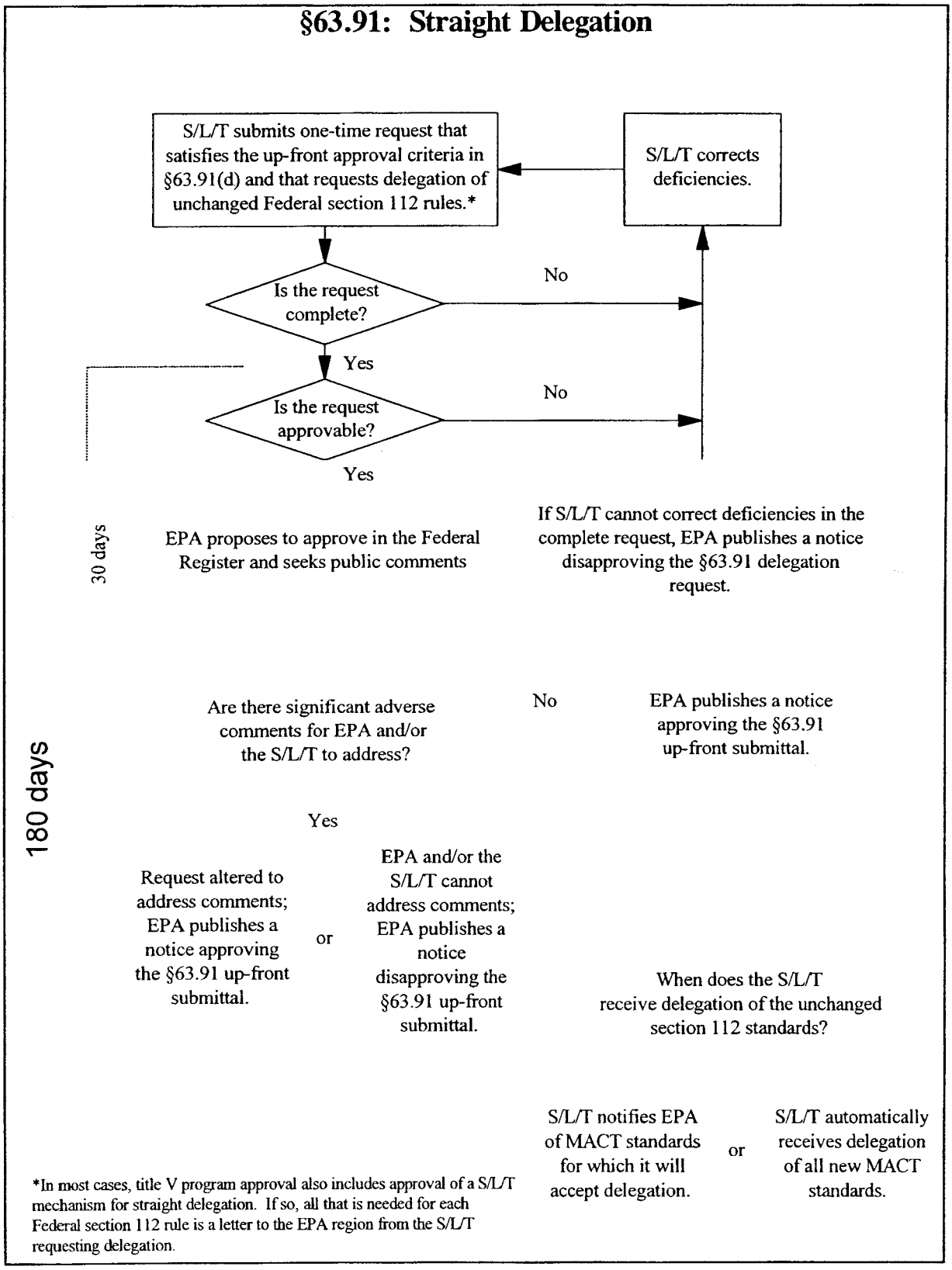
§63.91: Straight Delegation
S/L/T submits one-time request that satisfies the up-front approval criteria in §63.91(d) and that requests delegation of unchanged Federal section 112 rules.*
S/L/T corrects deficiencies.
Is the request complete?
No
Yes
Is the request approvable?
No
Yes
30 days
EPA proposes to approve in the Federal Register and seeks public comments
If S/L/T cannot correct deficiencies in the complete request, EPA publishes a notice disapproving the §63.91 delegation request.
180 days
Are there significant adverse comments for EPA and/or the S/L/T to address?
No
EPA publishes a notice approving the §63.91 up-front submittal.
Yes
Request altered to address comments; EPA publishes a notice approving the §63.91 up-front submittal.
or
EPA and/or the S/L/T cannot address comments; EPA publishes a notice disapproving the §63.91 up-front submittal.
When does the S/L/T receive delegation of the unchanged section 112 standards?
S/L/T notifies EPA of MACT standards for which it will accept delegation.
or
S/L/T automatically receives delegation of all new MACT standards.
*In most cases, title V program approval also includes approval of a S/L/T mechanism for straight delegation. If so, all that is needed for each Federal section 112 rule is a letter to the EPA region from the S/L/T requesting delegation.

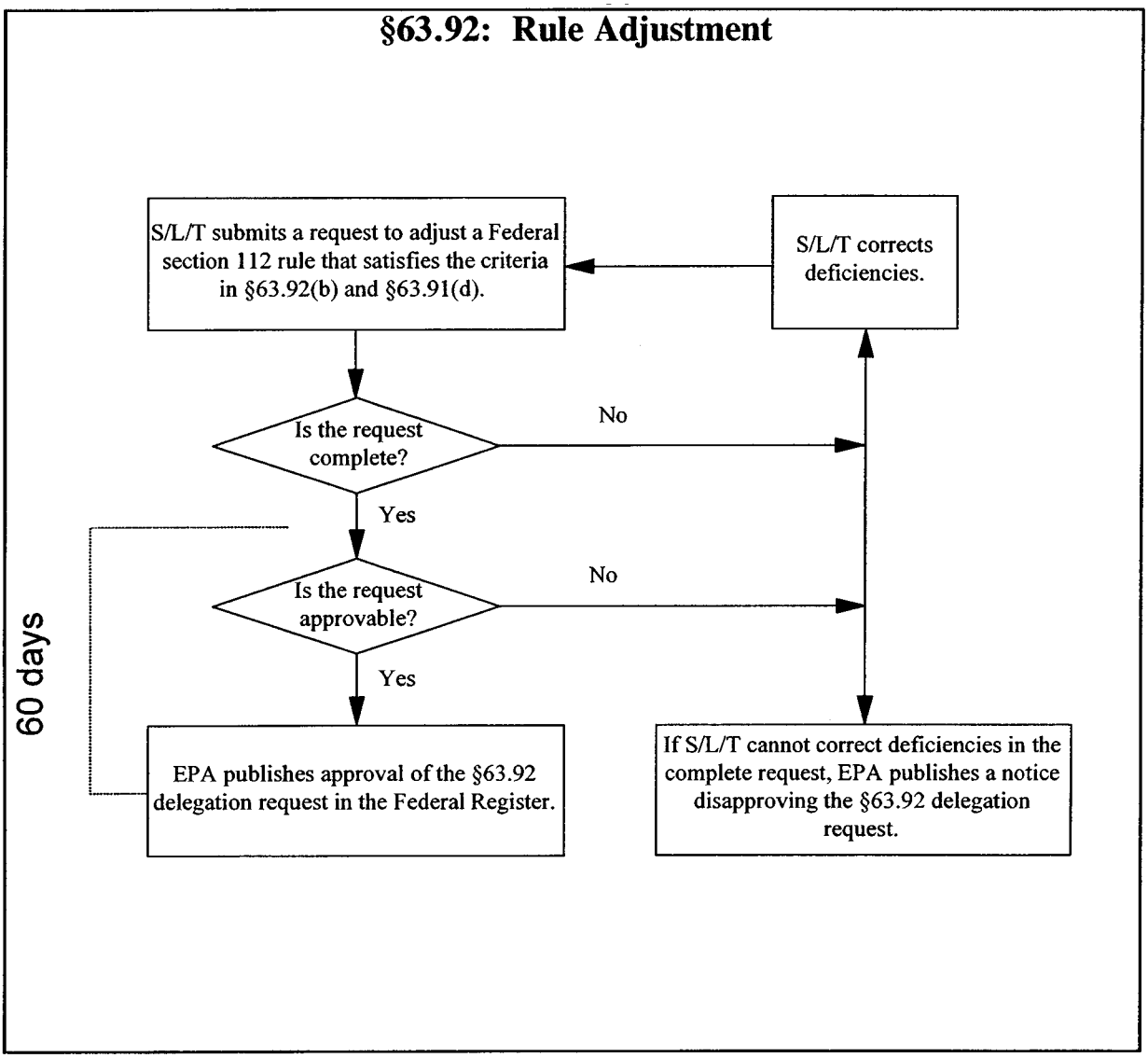
§63.92: Rule Adjustment
S/L/T submits a request to adjust a Federal section 112 rule that satisfies the criteria in §63.92(b) and §63.91(d).
S/L/T corrects deficiencies.
Is the request complete?
No
Yes
Is the request approvable?
No
Yes
60 days
EPA publishes approval of the §63.92 delegation request in the Federal Register.
If S/L/T cannot correct deficiencies in the complete request, EPA publishes a notice disapproving the §63.92 delegation request.

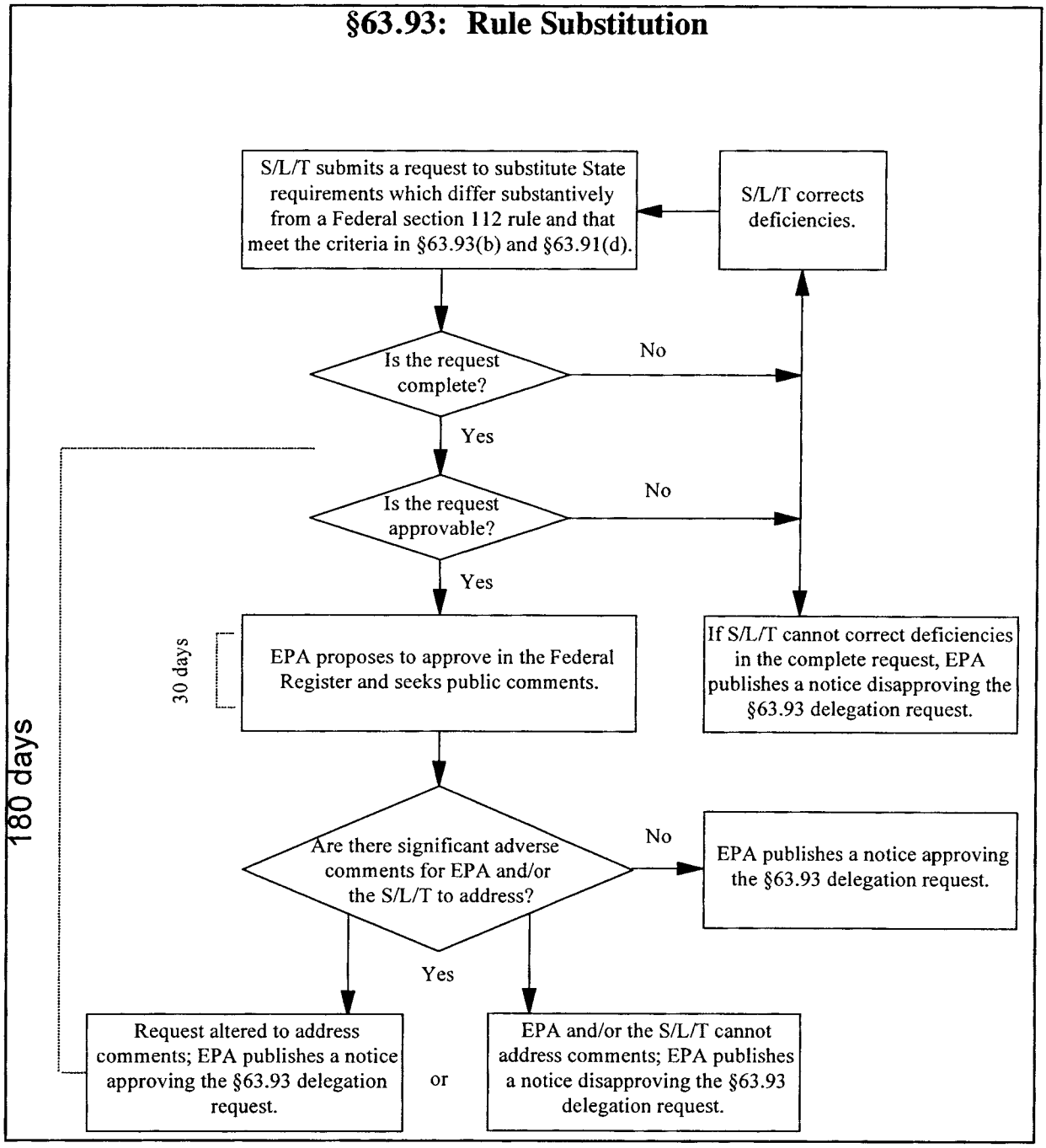
§63.93: Rule Substitution
S/L/T submits a request to substitute State requirements which differ substantively from a Federal section 112 rule and that meet the criteria in §63.93(b) and §63.91(d).
S/L/T corrects deficiencies.
Is the request complete?
No
Yes
Is the request approvable?
No
Yes
30 days
EPA proposes to approve in the Federal Register and seeks public comments.
If S/L/T cannot correct deficiencies in the complete request, EPA publishes a notice disapproving the §63.93 delegation request.
180 days
Are there significant adverse comments for EPA and/or the S/L/T to address?
No
EPA publishes a notice approving the §63.93 delegation request.
Yes
Request altered to address comments; EPA publishes a notice approving the §63.93 delegation request.
or
EPA and/or the S/L/T cannot address comments; EPA publishes a notice disapproving the §63.93 delegation request.

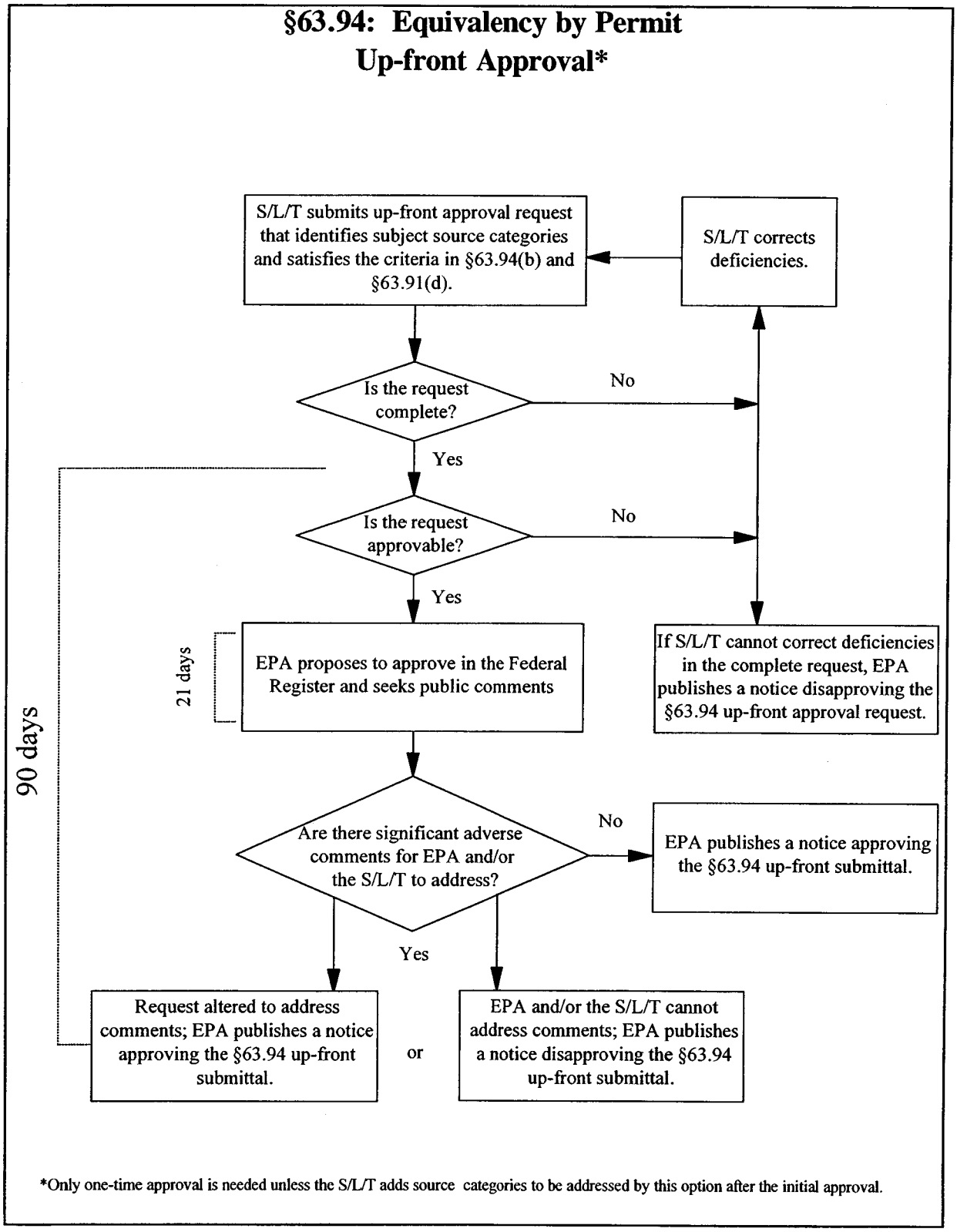
§63.94: Equivalency by Permit
Up-front Approval*
S/L/T submits up-front approval request that identifies subject source categories and satisfies the criteria in §63.94(b) and §63.91(d).
S/L/T corrects deficiencies.
Is the request complete?
No
Yes
Is the request approvable?
No
Yes
21 days
EPA proposes to approve in the Federal Register and seeks public comments
If S/L/T cannot correct deficiencies in the complete request, EPA publishes a notice disapproving the §63.94 up-front approval request.
90 days
Are there significant adverse comments for EPA and/or the S/L/T to address?
No
EPA publishes a notice approving the §63.94 up-front submittal.
Yes
Request altered to address comments; EPA publishes a notice approving the §63.94 up-front submittal.
or
EPA and/or the S/L/T cannot address comments; EPA publishes a notice disapproving the §63.94 up-front submittal.
*Only one-time approval is needed unless the S/L/T adds source categories to be addressed by this option after the initial approval.

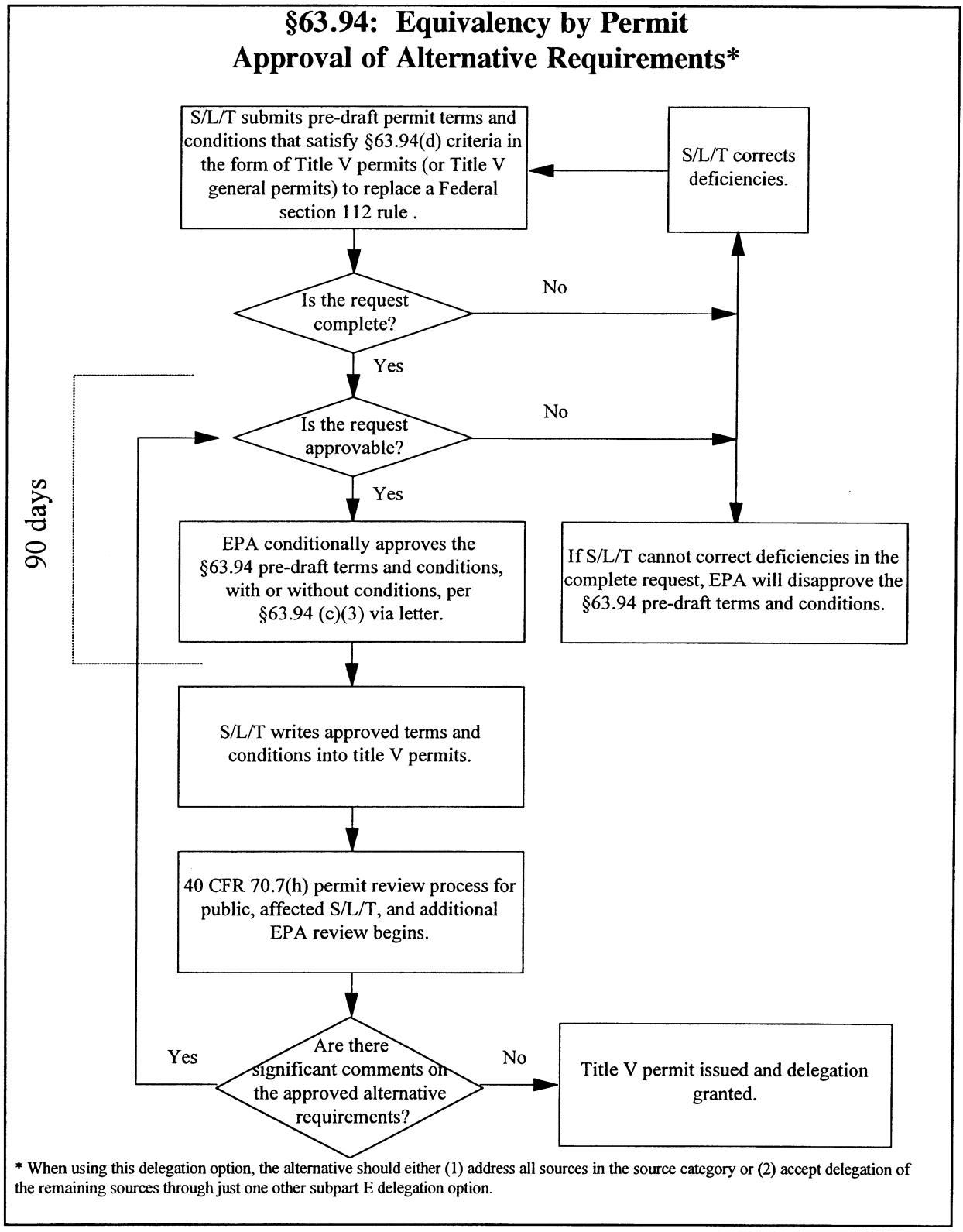

* When using this delegation option, the alternative should either (1) address all sources in the source category or (2) accept delegation of the remaining sources through just one other subpart E delegation option.

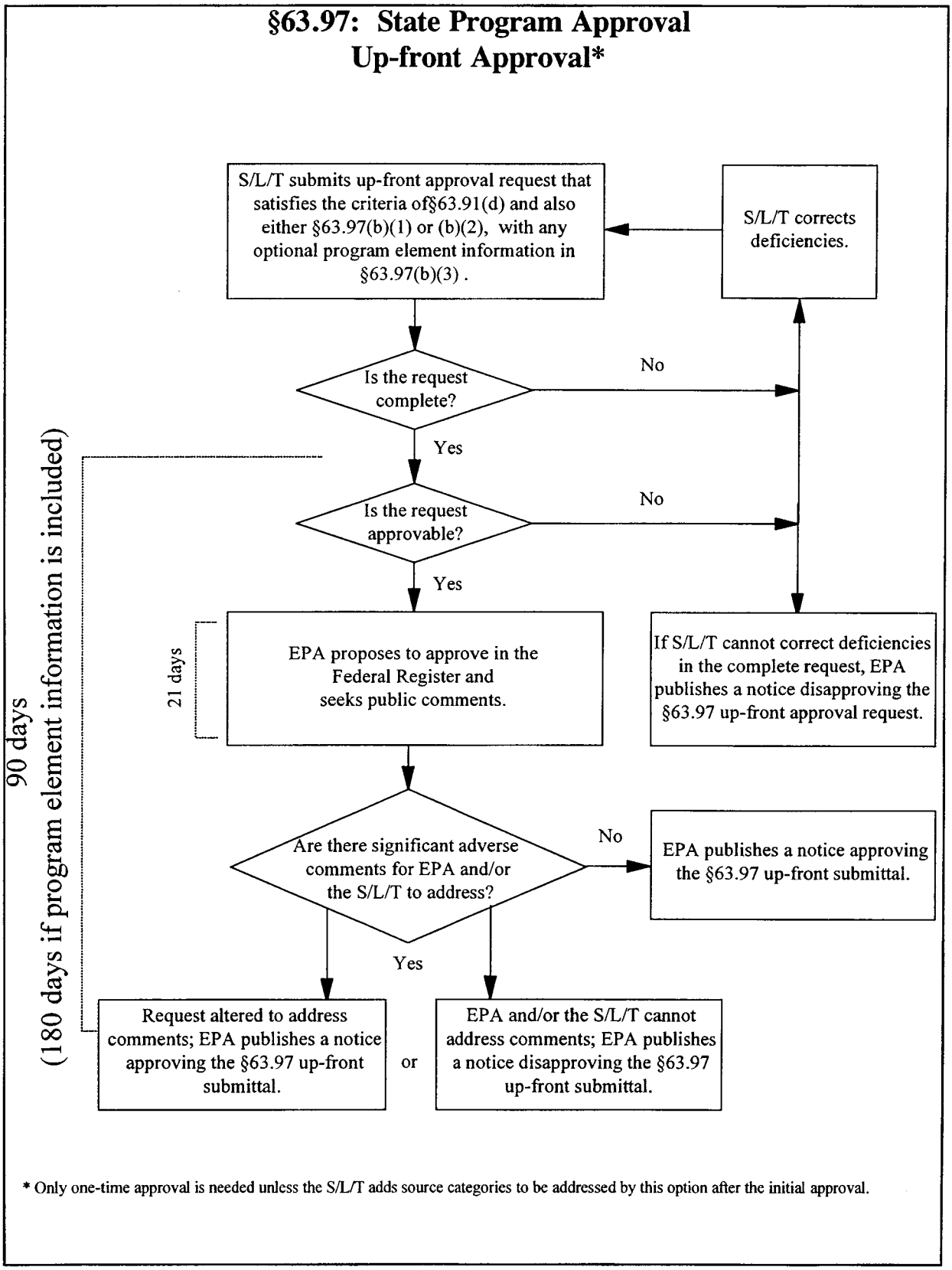

* Only one-time approval is needed unless the S/L/T adds source categories to be addressed by this option after the initial approval.

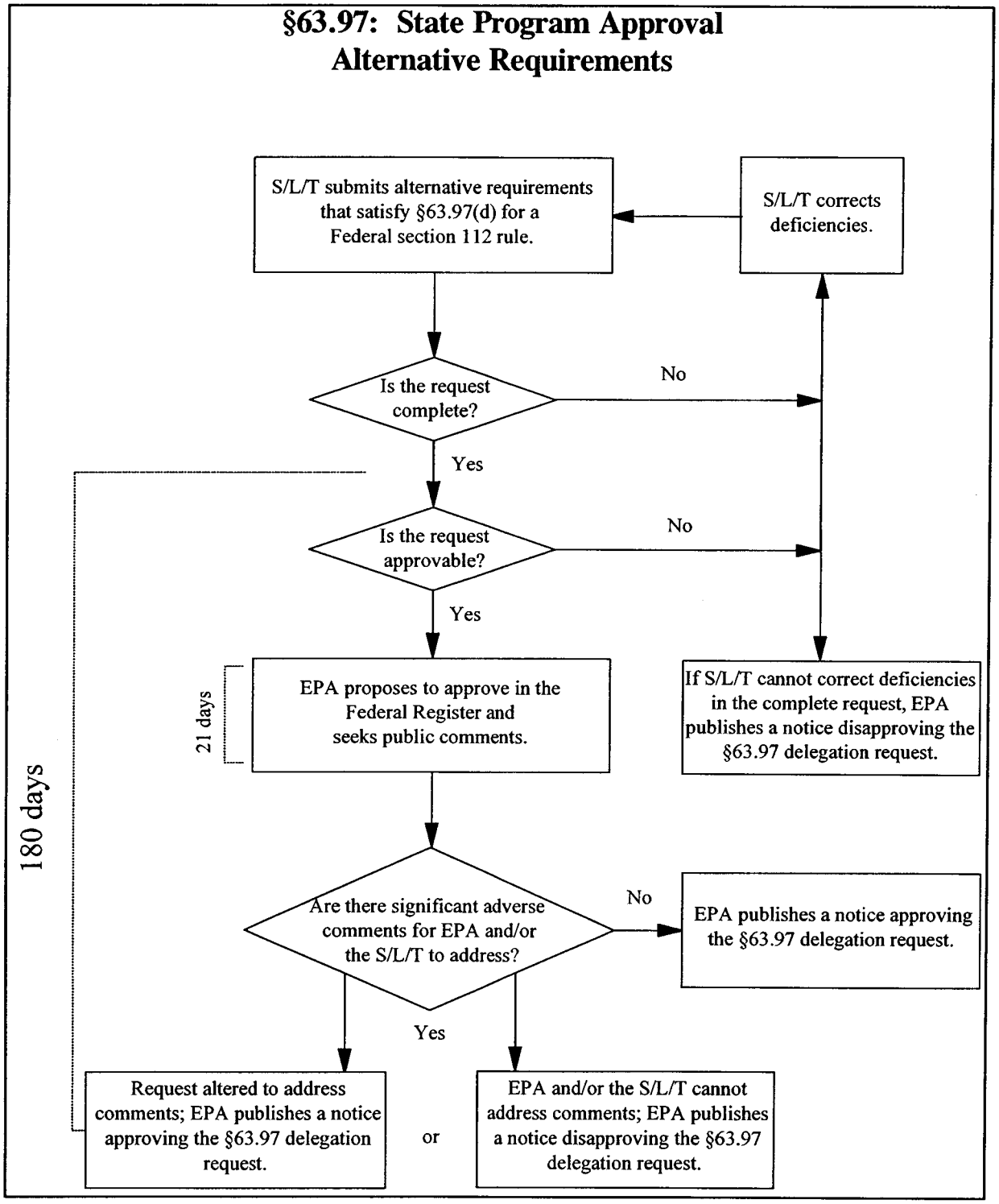

BILLING CODE 6560–50–C

For the reasons set out in the preamble, title 40, chapter I, of the Code of Federal Regulations is amended as follows:

PART 9—[AMENDED]

1. The authority citation for part 9 continues to read as follows:

Authority: 7 U.S.C. 135 *et seq.*, 136–136y; 15 U.S.C. 2001, 2003, 2005, 2006, 2601–2671; 21 U.S.C. 331j, 346a, 348; 31 U.S.C. 9701; 33 U.S.C. 1251 *et seq.*, 1311, 1313d, 1314, 1318, 1321, 1326, 1330, 1342, 1344, 1345(d) and (e), 1361; E.O. 11735, 38 FR 21243, 3 CFR, 1971–1975 Comp. p. 973; 42 U.S.C. 241, 242b, 243, 246, 300f, 300g, 300g–1, 300g–2, 300g–3, 300g–4, 300g–5, 300g–6, 300j–1, 300j–2, 300j–3, 300j–4, 300j–9, 1857 *et seq.*, 6901–6992k, 7401–7671q, 7542, 9601–9657, 11023, 11048.

2. Section 9.1 is amended by removing entry ''63.91–63.96'' and adding ''63.91–63.97'' under the indicated heading to read as follows:

§ 9.1 OMB approvals under the Paperwork Reduction Act.

40 CFR citation OMB Control No.

National Emission Standards for Hazardous Air Pollutants for Source Categories

* * * * *

63.91–63.97 2060–0264

* * * * *

PART 63—[AMENDED]

1. The [3] authority citation for part 63 continues to read as follows:

Authority: 42 U.S.C. 7401, *et seq.*

Subpart E—[Amended]

2. Part 63 is amended by revising §§ 63.90–63.97 of subpart E to read as follows:

§ 63.90 Program overview.

The regulations in this subpart establish procedures consistent with section 112(l) of the Clean Air Act (Act) (42 U.S.C. 7401–7671q). This subpart establishes procedures for the approval of State rules, programs, or other requirements such as permit terms and conditions to be implemented and enforced in place of certain otherwise applicable section 112 Federal rules, emission standards, or requirements (including section 112 rules promulgated under the authority of the Act prior to the 1990 Amendments to the Act). The authority to implement and enforce section 112 Federal rules as promulgated without changes may be delegated under procedures established in this subpart. In this process, States may seek approval of a State mechanism for receiving delegation of existing and future unchanged Federal section 112 standards. This subpart clarifies which part 63, subpart A General Provisions authorities can be delegated to States. This subpart also establishes procedures for the review and withdrawal of section 112 implementation and enforcement authorities delegated through this subpart. This subpart also establishes procedures for the approval of State rules or programs to establish limitations on the potential to emit pollutants listed in or pursuant to section 112(b) of the Act.

(a) *Definitions.* The following definitions apply to this subpart.

Alternative requirements means the requirements, rules, permits, provisions, methods, or other enforceable mechanisms that a State submits for approval under this subpart or subpart A and, after approval, replaces the otherwise applicable Federal section 112 requirements, provisions, or methods.

Applicability criteria means the regulatory criteria used to define all affected sources subject to a specific section 112 rule.

Approval means a determination by the Administrator that a State rule, program, or requirement meets the criteria of § 63.91 and the additional criteria of either § 63.92, § 63.93, § 63.94, or § 63.97 as appropriate. For accidental release prevention programs, the criteria of § 63.95 must be met in addition to the criteria of § 63.91. This is considered a ''full approval'' for the purposes of this subpart. Partial approvals may also be granted as described in this subpart. Any approved requirements become applicable requirements under § 70.2 of this chapter.

Compliance and enforcement measures means requirements relating to compliance and enforcement, including but not necessarily limited to monitoring methods and procedures, recordkeeping, reporting, plans, inspection, maintenance, and operation requirements, pollution prevention requirements, noticing, field inspections, entry, sampling, or accidental release prevention oversight.

Intermediate change to monitoring means a modification to federally required monitoring involving ''proven technology'' (generally accepted by the scientific community as equivalent or better) that is applied on a site-specific basis and that may have the potential to decrease the stringency of the associated emission limitation or standard. Though site-specific, an intermediate change may set a national precedent for a source category and may ultimately result in a revision to the federally required monitoring. Examples of intermediate changes to monitoring include, but are not limited to:

(1) Use of a continuous emission monitoring system (CEMS) in lieu of a parameter monitoring approach;

(2) Decreased frequency for non-continuous parameter monitoring or physical inspections;

(3) Changes to quality control requirements for parameter monitoring; and

(4) Use of an electronic data reduction system in lieu of manual data reduction.

Intermediate change to test method means a within-method modification to a federally enforceable test method involving ''proven technology'' (generally accepted by the scientific community as equivalent or better) that is applied on a site-specific basis and that may have the potential to decrease the stringency of the associated emission limitation or standard. Though site-specific, an intermediate change may set a national precedent for a source category and may ultimately result in a revision to the federally enforceable test method. In order to be approved, an intermediate change must be validated according to EPA Method 301 (Part 63, Appendix A) to demonstrate that it provides equal or improved accuracy and precision. Examples of intermediate changes to a test method include, but are not limited to:

(1) Modifications to a test method's sampling procedure including substitution of sampling equipment that has been demonstrated for a particular sample matrix, and use of a different impinger absorbing solution;

(2) Changes in sample recovery procedures and analytical techniques, such as changes to sample holding times and use of a different analytical finish with proven capability for the analyte of interest; and

(3) ''Combining'' a federally required method with another proven method for application to processes emitting multiple pollutants.

Level of control means the degree to which a rule, program, or requirement limits emissions or employs design, equipment, work practice, or operational standards, accident prevention, or other requirements or techniques (including a prohibition of emissions) for:

[3] The ICRs referenced in this section of the table encompass the applicable general provisions contained in 40 CFR part 63, subpart A, which are not independent information collection requirements.

(1)(i) Each hazardous air pollutant, if individual pollutants are subject to emission limitations, and

(ii) The aggregate total of hazardous air pollutants, if the aggregate grouping is subject to emission limitations, provided that the rule, program, or requirement would not lead to an increase in risk to human health or the environment; and

(2) Each substance regulated under part 68 of this chapter.

(3) Test methods and associated procedures and averaging times are integral to the level of control.

Local agency means a local air pollution control agency or, for the purposes of § 63.95, any local agency or entity having responsibility for preventing accidental releases which may occur at a source regulated under part 68 of this chapter.

Major change to monitoring means a modification to federally required monitoring that uses ''unproven technology or procedures'' (not generally accepted by the scientific community) or is an entirely new method (sometimes necessary when the required monitoring is unsuitable). A major change to monitoring may be site-specific or may apply to one or more source categories and will almost always set a national precedent. Examples of major changes to monitoring include, but are not limited to:

(1) Use of a new monitoring approach developed to apply to a control technology not contemplated in the applicable regulation;

(2) Use of a predictive emission monitoring system (PEMS) in place of a required continuous emission monitoring system (CEMS);

(3) Use of alternative calibration procedures that do not involve calibration gases or test cells;

(4) Use of an analytical technology that differs from that specified by a performance specification;

(5) Decreased monitoring frequency for a continuous emission monitoring system, continuous opacity monitoring system, predictive emission monitoring system, or continuous parameter monitoring system;

(6) Decreased monitoring frequency for a leak detection and repair program; and

(7) Use of alternative averaging times for reporting purposes.

Major change to recordkeeping/reporting means:

(1) A modification to federally required recordkeeping or reporting that:

(i) May decrease the stringency of the required compliance and enforcement measures for the relevant standards;

(ii) May have national significance (*e.g.*, might affect implementation of the applicable regulation for other affected sources, might set a national precedent); or

(iii) Is not site-specific.

(2) Examples of major changes to recordkeeping and reporting include, but are not limited to:

(i) Decreases in the record retention for all records;

(ii) Waiver of all or most recordkeeping or reporting requirements;

(iii) Major changes to the contents of reports; or

(iv) Decreases in the reliability of recordkeeping or reporting (*e.g.*, manual recording of monitoring data instead of required automated or electronic recording, or paper reports where electronic reporting may have been required).

Major change to test method means a modification to a federally enforceable test method that uses ''unproven technology or procedures'' (not generally accepted by the scientific community) or is an entirely new method (sometimes necessary when the required test method is unsuitable). A major change to a test method may be site-specific, or may apply to one or more sources or source categories, and will almost always set a national precedent. In order to be approved, a major change must be validated according to EPA Method 301 (Part 63, Appendix A). Examples of major changes to a test method include, but are not limited to:

(1) Use of an unproven analytical finish;

(2) Use of a method developed to fill a test method gap;

(3) Use of a new test method developed to apply to a control technology not contemplated in the applicable regulation; and

(4) Combining two or more sampling/analytical methods (at least one unproven) into one for application to processes emitting multiple pollutants.

Minor change to monitoring means:

(1) A modification to federally required monitoring that:

(i) Does not decrease the stringency of the compliance and enforcement measures for the relevant standard;

(ii) Has no national significance (*e.g.*, does not affect implementation of the applicable regulation for other affected sources, does not set a national precedent, and individually does not result in a revision to the monitoring requirements); and

(iii) Is site-specific, made to reflect or accommodate the operational characteristics, physical constraints, or safety concerns of an affected source.

(2) Examples of minor changes to monitoring include, but are not limited to:

(i) Modifications to a sampling procedure, such as use of an improved sample conditioning system to reduce maintenance requirements;

(ii) Increased monitoring frequency; and

(iii) Modification of the environmental shelter to moderate temperature fluctuation and thus protect the analytical instrumentation.

Minor change to recordkeeping/reporting means:

(1) A modification to federally required recordkeeping or reporting that:

(i) Does not decrease the stringency of the compliance and enforcement measures for the relevant standards;

(ii) Has no national significance (*e.g.*, does not affect implementation of the applicable regulation for other affected sources, does not set a national precedent, and individually does not result in a revision to the recordkeeping or reporting requirement); and

(iii) Is site-specific.

(2) Examples of minor changes to recordkeeping or reporting include, but are not limited to:

(i) Changes to recordkeeping necessitated by alternatives to monitoring;

(ii) Increased frequency of recordkeeping or reporting, or increased record retention periods;

(iii) Increased reliability in the form of recording monitoring data, *e.g.*, electronic or automatic recording as opposed to manual recording of monitoring data;

(iv) Changes related to compliance extensions granted pursuant to § 63.6(i);

(v) Changes to recordkeeping for good cause shown for a fixed short duration, *e.g.*, facility shutdown;

(vi) Changes to recordkeeping or reporting that is clearly redundant with equivalent recordkeeping/reporting requirements; and

(vii) Decreases in the frequency of reporting for area sources to no less than once a year for good cause shown, or for major sources to no less than twice a year as required by title V, for good cause shown.

Minor change to test method means:

(1) A modification to a federally enforceable test method that:

(i) Does not decrease the stringency of the emission limitation or standard;

(ii) Has no national significance (*e.g.*, does not affect implementation of the

applicable regulation for other affected sources, does not set a national precedent, and individually does not result in a revision to the test method); and

(iii) Is site-specific, made to reflect or accommodate the operational characteristics, physical constraints, or safety concerns of an affected source.

(2) Examples of minor changes to a test method include, but are not limited to:

(i) Field adjustments in a test method's sampling procedure, such as a modified sampling traverse or location to avoid interference from an obstruction in the stack, increasing the sampling time or volume, use of additional impingers for a high moisture situation, accepting particulate emission results for a test run that was conducted with a lower than specified temperature, substitution of a material in the sampling train that has been demonstrated to be more inert for the sample matrix; and

(ii) Changes in recovery and analytical techniques such as a change in quality control/quality assurance requirements needed to adjust for analysis of a certain sample matrix.

Partial approval means that the Administrator approves under this subpart:

(1) A State's legal authorities that fully meet the criteria of § 63.91(d)(3)(ii)–(v), and substantially meet the criteria of § 63.91(d)(3)(i) as appropriate; or

(2) A State rule or program that meets the criteria of §§ 63.92, 63.93, 63.94, 63.95, or 63.97 with the exception of a separable portion of that State rule or program which fails to meet those criteria. A separable portion of a State rule or program is defined as a section(s) of a rule or a portion(s) of a program which can be acted upon independently without affecting the overall integrity of the rule or program as a whole.

Program means, for the purposes of an approval under this subpart, a collection of State authorities, resources, and other requirements that satisfy the criteria of this subpart and subpart A.

State agency, for the purposes of this subpart, includes State and local air pollution agencies, Indian tribes as defined in § 71.2 of this chapter, and territories of the United States to the extent they are or will be delegated Federal section 112 rules, emission standards, or requirements.

Stringent or stringency means the degree of rigor, strictness or severity a statute, rule, emission standard, or requirement imposes on an affected source as measured by the quantity of emissions, or as measured by parameters relating to rule applicability and level of control, or as otherwise determined by the Administrator.

Title V operating permit programs means the part 70 permitting program and the delegated Indian tribal programs under part 70 of this chapter.

(b) *Local agency coordination with State and territorial agencies.* Local agencies submitting a rule or program for approval under this subpart shall consult with the relevant State or Territorial agency prior to making a request for approval to the Administrator. A State or Territorial agency may submit requests for approval on behalf of a local agency after consulting with that local agency.

(c) *Tribal authority.*

A tribal authority may submit a rule or program under this subpart, provided that the tribal authority has received approval, under the provisions of part 49 of this chapter, for administering Federal rules under section 112 of the Act.

(d) *Authorities retained by the Administrator.*

(1) The following authorities will be retained by the Administrator and will not be delegated:

(i) The authority to add or delete pollutants from the list of hazardous air pollutants established under section 112(b);

(ii) [Reserved]

(iii) [Reserved]

(iv) The authority to add source categories to or delete source categories from the Federal source category list established under section 112(c)(1) or to subcategorize categories on the Federal source category list after proposal of a relevant emission standard;

(v) The authority to revise the source category schedule established under section 112(e) by moving a source category to a later date for promulgation; and

(vi) Any other authorities determined to be nondelegable by the Administrator.

(2) Nothing in this subpart shall prohibit the Administrator from enforcing any applicable rule, emission standard or requirement established under section 112.

(3) Nothing in this subpart shall affect the authorities and obligations of the Administrator or the State under title V of the Act or under regulations promulgated pursuant to that title.

(e) *Federally-enforceable requirements.* All rules, programs, State or local permits, or other requirements approved under this subpart and all resulting part 70 operating permit conditions are enforceable by the Administrator and by citizens under the Act.

(f) *Standards not subject to modification or substitution.* With respect to radionuclide emissions from licensees of the Nuclear Regulatory Commission or licensees of Nuclear Regulatory Commission Agreement States which are subject to part 61, subparts I, T, or W of this chapter, a State may request that the EPA approve delegation of implementation and enforcement of the Federal standard pursuant to § 63.91, but no changes or modifications in the form or content of the standard will be approved pursuant to § 63.92, § 63.93, § 63.94, or § 63.97.

(g) *Selection of delegation options.*

(1) With the exception of paragraphs (g)(2) and (g)(3) of this section, States may only submit requests for approval of alternative requirements for a section 112 Federal rule, emission standard, or other requirement under a single delegation option under this subpart.

(2) In the case of § 63.94 submittals, if the identified sources in any source category comprise a subset of the sources in that category, the State must accept delegation under one other section of this subpart for the remainder of the sources in that category that are required to be permitted by the State under part 70 of this chapter.

(3) If the Administrator partially approves the State request per § 63.91(f), the State may submit a request for the remaining section 112 rules, emission standards, or requirements in that category under another section of this subpart.

§ 63.91 Criteria for straight delegation and criteria common to all approval options.

(a) *Applicable approval criteria.* A State must satisfy the criteria in paragraph (d) of this section for up-front approval to obtain delegation of the Federal section 112 rules, emission standards, or requirements. Once a State has demonstrated it meets the criteria in paragraph (d) of this section, it only needs to reference that demonstration and reaffirm that it still meets the criteria in future submittals. In addition, a State must satisfy the applicable approval criteria in §§ 63.92, 63.93, 63.94, 63.95, or 63.97, as specified in the following paragraphs.

(1) *Unchanged Federal section 112 rules ("straight delegation").* To obtain approval of State programs to implement and enforce Federal section 112 rules as promulgated without changes (except for accidental release programs, described in paragraph (a)(4) of this section), only the criteria of paragraph (d) of this section must be met. This includes State requests for

one-time approval of their mechanism for taking delegation of future unchanged Federal section 112 rules, emission standards, and requirements as well as approval to implement and enforce unchanged Federal section 112 rules, emission standards, and requirements on a rule-by-rule basis.

(2) *State rules, programs, or requirements that are different from the Federal rule.* To obtain approval under this subpart of a rule, program, or requirement that is different from the Federal section 112 rule, emission standard, or requirement, the criteria of paragraph (d) of this section and the criteria of either § 63.92, § 63.93, § 63.94, or § 63.97 must be met.

(3) *Separable portions of State rules, programs, or requirements (''partial approval'').* To obtain partial approval under this subpart, a State request must meet the criteria in paragraphs (d) and (f) of this section.

(4) *Programs under part 68 of this chapter, prevention of accidental releases.* For approval of State rules or programs to implement and enforce the Federal accidental release prevention program in part 68 of this chapter, as promulgated without changes, the provisions of paragraph (d) of this section, and § 63.95 must be met. For approval of alternative requirements, the provisions of either § 63.92 or § 63.93 must also be met.

(5) *Limits on the potential to emit section 112 pollutants.* The Administrator may, under the authority of section 112(l) and this subpart, also approve a State program designed to establish limits on the potential to emit hazardous air pollutants listed pursuant to section 112 of the Act.

(b) *Approval process.* When a State submits an initial request for approval, and except as otherwise specified under § 63.92, § 63.93, § 63.94, § 63.95, or § 63.97, for a State's subsequent requests for approval, the approval process will be as shown in the following table:

If . . .	Then . . .	And then . . .
(1) A request for approval is received	the Administrator will review the request for approval and determine whether the request is complete according to the criteria in this subpart.	if a request is incomplete, the Administrator will notify the State of the specific deficient elements of the request.
(2) A complete request for approval is received	the Administrator will seek public comment for a minimum of 30 days through a **Federal Register** notice on the State's request for approval.	the Administrator will require that comments be submitted concurrently to the State.
(3) A complete request for approval is received and there has been a period of public comment.	the Administrator will either approve, partially approve, or disapprove the State rule, program, or requirement within 180 days of receipt of a complete request.	
(4) The Administrator finds that all of the criteria of this section are met and all of the criteria of § 63.92, § 63.93, § 63.94, § 63.95, or § 63.97 are met.	the Administrator will approve or partially approve the State rule, program, or requirement.	the Administrator will publish it in the **Federal Register**, and incorporate it directly or by reference, in the appropriate subpart of part 63. Requirements approved under § 63.95 will be incorporated pursuant to requirements under part 68 of this chapter.
(5) The Administrator finds that any of the criteria of this section are not met, or any of the criteria of § 63.92, § 63.93, § 63.94, § 63.95, or § 63.97 under which the request for approval was made are not met.	the Administrator will notify the State of any revisions or additions necessary to obtain approval.	any resubmittal by a State of a request for approval will be considered a new request under this subpart.
(6) A State rule, program, or requirement is disapproved.	unless the State can revise the submittal to meet the criteria, the Administrator will disapprove the State rule, program, or requirement.	the Administrator will publish the disapproval in the **Federal Register**.

(c) *Enforcement.*

(1) Approval of the alternative rule, program, or requirement delegates to the State the authority to implement and enforce the approved rule, program, or requirement in lieu of the otherwise applicable Federal section 112 rule, emission standard, or requirement.

(i) The approved State rule, program, or requirement shall be federally enforceable from the date the Administrator signs the approval, with two exceptions. For States that implement unchanged Federal requirements (§ 63.91, straight delegation) via their title V permit program, and for States using the equivalency by permit option (63.94), the approved requirements shall be federally enforceable on the date of issuance or revision of the title V permit.

(ii) In the case of a partial approval under paragraph (f)(1) of this section, only those authorities of the State request found to meet the requirements of this section will be approved; the remaining Federal authorities will be implemented and enforced by EPA.

(iii) For partial approvals under paragraph (f)(3) of this section, only the portion of the State rule that is approved will be federally enforceable; the remainder continues to be State enforceable only.

(2) When a State rule, program, or requirement is approved by the Administrator under this subpart, applicable title V permits shall be revised according to the provisions of § 70.7(f) of this chapter.

(i) Each permit shall specify the origin of the alternative conditions per § 70.6 (a)(i) of this chapter and specifically reference the **Federal Register** notice or other EPA approval mechanism in the permit.

(ii) When approved alternative requirements are incorporated in a permit, those requirements must be clearly identified and carried forward in any subsequent permit revisions or renewals. If the permit is not renewed, or if a revision or renewal does not carry the alternate requirements forward, then the Federal section 112 requirements become the applicable requirements.

(3) If approval is withdrawn under § 63.96, all otherwise applicable Federal rules and requirements shall be enforceable in accordance with the compliance schedule established in the

withdrawal notice and relevant title V permits shall be revised according to the provisions of § 70.7(f) of this chapter.

(d) *Criteria for approval.*

(1) Any request for approval under this subpart shall meet all section 112(l) approval criteria specified by the otherwise applicable Federal section 112 rule, emission standard, or requirement, all of the approval criteria of this section, and any additional approval criteria in §§ 63.92, 63.93, 63.94, 63.95, or 63.97.

(2) Once a State has satisfied the § 63.91(d) up-front approval requirements, it only needs to reference the previous demonstration and reaffirm that is still meets the criteria for any subsequent equivalency submittals.

(3) Interim or final title V program approval will satisfy the criteria set forth in § 63.91(d), up-front approval criteria. Alternatively, the State must provide the following items in paragraphs (d)(3)(i) through (v) of this section to the Administrator:

(i) A written finding by the State Attorney General (or for a local agency or tribal authority, the General Counsel with full authority to represent the local agency or tribal authority) that the State has the necessary legal authority to implement and to enforce the State rule, program, or requirement upon approval and to assure compliance by all sources within the State with each applicable section 112 rule, emission standard, or requirement. For full approval, the State must have the following legal authorities concerning enforcement and compliance assurance:

(A) The State shall have enforcement authorities that meet the requirements of § 70.11 of this chapter, except that tribal authorities shall have enforcement authorities that meet the requirements of part 49 of this chapter, the Tribal Air Rule.

(B) The State shall have authority to request information from regulated sources regarding their compliance status.

(C) The State shall have authority to inspect sources and any records required to determine a source's compliance status.

(D) If a State delegates authorities to a local agency, the State must retain enforcement authority unless the local agency has authorities that meet the requirements of § 70.11 of this chapter.

(ii) A copy of State statutes, regulations, and requirements that contain the appropriate provisions granting authority to implement and enforce the State rule, program, or requirement upon approval.

(iii) A demonstration that the State has adequate resources to implement and enforce all aspects of the rule, program, or requirement upon approval (except for authorities explicitly retained by the Administrator, such as those pursuant to paragraph (f) of this section or pursuant to part 49 of this chapter), which includes:

(A) A description in narrative form of the scope, structure, coverage, and processes of the State program.

(B) A description of the organization and structure of the agency or agencies that will have responsibility for administering the program.

(C) A description of the agency's capacity to carry out the State program, including the number, occupation, and general duties of the employees.

(iv) A schedule demonstrating expeditious State implementation of the rule, program, or requirement upon approval.

(v) A plan that assures expeditious compliance by all sources subject to the State rule, program, or requirement upon approval. The plan should include, at a minimum, a complete description of the State's compliance tracking and enforcement program, including but not limited to inspection strategies.

(4) If any of the State documents that are required to support an approval under this subpart are readily available to the EPA and to the public, the State may cite the relevant portions of the documents or indicate where they are available (*e.g.*, by providing an Internet address) rather than provide copies.

(e) *Revisions.* Within 90 days of any State amendment, repeal, or revision of any State rule, program, permit, or other requirement approved as an alternative to a Federal requirement or part of the authority necessary for the up-front approval, the State must provide the Administrator with a copy of the revised authorities and meet the requirements of either paragraph (e)(1) or (e)(2) of this section.

(1)(i) The State shall provide the Administrator with a written finding by the State Attorney General (or for a local agency or tribal authority, the General Counsel with full authority to represent the local agency or tribal authority) that the State's revised legal authorities are adequate to continue to implement and to enforce all previously approved State rules and the approved State program (as applicable) and adequate to continue to assure compliance by all sources within the State with approved rules, the approved program, the approved permit, or other requirements (as applicable) and each applicable section 112 rule, emission standard, or requirement.

(ii) If the Administrator determines that the written finding is not adequate, the State shall request approval of the revised rule, program, permit, or other requirement according to the provisions of paragraph (e)(2) of this section.

(2) The State shall request approval under this subpart for any revised rule, program, permit, or other requirement.

(i) If the Administrator approves the revised rule, program, permit, or other requirement, the revision will replace the previously approved rule, program, permit, or other requirement.

(ii) If the Administrator disapproves the revised rule, program, permit, or other requirement, the Administrator will initiate procedures under § 63.96 to withdraw approval of any previously approved rule, program, permit, or other requirement that may be affected by the revised authorities.

(iii) Until such time as the Administrator approves or withdraws approval of a revised rule, program, permit, or other requirement, the previously approved rule, program, permit, or requirement remains federally enforceable and the revision is not federally enforceable.

(3) If the EPA amends, or otherwise revises a promulgated section 112 rule or requirement in a way that increases its stringency, the EPA will notify any State which has received delegation under this subpart of the need to revise their equivalency demonstration.

(i) The EPA Regional Office will consult with the affected State(s) to set a time frame for the State(s) to submit a revised equivalency demonstration.

(ii) The revised equivalency demonstration will be reviewed and approved or disapproved according to the procedures set forth in this section and § 63.91, § 63.92, § 63.93, § 63.94, § 63.95, or § 63.97, whichever are applicable.

(f) *Partial approval.* The partial approval process under this subpart is described in the following table:

If . . .	Then . . .	And . . .
(1) A State's legal authorities submitted under this subpart substantially meet the requirements of paragraph (d)(3)(i) of this section, but are not fully approvable.	the Administrator may grant a partial approval with the State's consent.	The EPA will continue to implement and enforce those authorities under paragraph (d)(3)(i) of this section that are not approved.
(2) Any of the other requirements in paragraphs (d)(3)(ii)–(v) of this section are not approvable.	the Administrator will disapprove the submittal	
(3) A rule, requirement, or program submitted under this subpart meets the requirements of § 63.92, § 63.93, § 63.94, § 63.95, or § 63.97 as appropriate, with the exception of a separable portion of that rule, requirement, or program.	the Administrator may remove that separable portion with the State's consent.	the Administrator may then grant a partial approval of the portion of the rule, requirement, or program that meets the requirements of this subpart.
(4) the Administrator determines that there are too many areas of deficiency or that separating the responsibilities between Federal and State government would be too cumbersome and complex.	the Administrator may disapprove the submittal in its entirety.	

(g) *Subpart A, Delegable authorities.* A State may exercise certain authorities granted to the Administrator under subpart A, but may not exercise others, according to the following criteria:

(1) A State may ask the appropriate EPA Regional Office to delegate any of the authorities listed as ''Category I'', in paragraph (g)(1)(i) of this section. The EPA Regional Office will delegate any such authorities at their discretion.

(i) ''Category I'' shall consist of the following authorities:

Category I Authorities

(A) Section 63.1, Applicability Determinations
(B) Section 63.6(e), Operation and Maintenance Requirements—Responsibility for Determining Compliance
(C) Section 63.6(f), Compliance with Non-Opacity Standards—Responsibility for Determining Compliance
(D) Section 63.6(h), Compliance with Opacity and Visible Emissions Standards—Responsibility for Determining Compliance
(E) Sections 63.7(c)(2)(i) and (d), Approval of Site-Specific Test Plans
(F) Section 63.7(e)(2)(i), Approval of Minor Alternatives to Test Methods
(G) Section 63.7(e)(2)(ii) and (f), Approval of Intermediate Alternatives to Test Methods
(H) Section 63.7(e)(iii), Approval of Shorter Sampling Times and Volumes When Necessitated by Process Variables or Other Factors
(I) Sections 63.7(e)(2)(iv), (h)(2), and (h)(3), Waiver of Performance Testing
(J) Sections 63.8(c)(1) and (e)(1), Approval of Site-Specific Performance Evaluation (Monitoring) Test Plans
(K) Section 63.8(f), Approval of Minor Alternatives to Monitoring
(L) Section 63.8(f), Approval of Intermediate Alternatives to Monitoring
(M) Section 63.9 and 63.10, Approval of Adjustments to Time Periods for Submitting Reports
(N) Section 63.10(f), Approval of Minor Alternatives to Recordkeeping and Reporting

(ii) The State must maintain a record of all approved alternatives to all monitoring, testing, recordkeeping, and reporting requirements and provide this list of alternatives to its EPA Regional Office at least semi-annually, or on a more frequent basis if requested by the Regional Office. The Regional Office may audit the State-approved alternatives and disapprove any that it determines are inappropriate, after discussion with the State. If changes are disapproved, the State must notify the source that it must revert to the original applicable monitoring, testing, recordkeeping, and/or reporting requirements (either those requirements of the original section 112 requirement, the alternative requirements approved under this subpart, or the previously approved site-specific alternative requirements). Also, in cases where the source does not maintain the conditions which prompted the approval of the alternatives to the monitoring, testing, recordkeeping, and/or reporting requirements, the State (or EPA Regional Office) must require the source to revert to the original monitoring, testing, recordkeeping, and reporting requirements, or more stringent requirements, if justified.

(2)(i) A State may not ask the appropriate EPA Regional Office to delegate any of the authorities listed as ''Category II'' in paragraph (g)(2)(ii) of this section.

(ii) ''Category II'' shall consist of the following authorities:

Category II Authorities

(A) Section 63.6(g), Approval of Alternative Non-Opacity Emission Standards
(B) Section 63.6(h)(9), Approval of Alternative Opacity Standards
(C) Sections 63.7(e)(2)(ii) and (f), Approval of Major Alternatives to Test Methods
(D) Section 63.8(f), Approval of Major Alternatives to Monitoring
(E) Section 63.10(f), Approval of Major Alternatives to Recordkeeping and Reporting

§ 63.92 Approval of State requirements that adjust a section 112 rule.

Under this section a State may seek approval of State requirements that make pre-approved adjustments to a Federal section 112 rule, emission standard, or requirement that are unambiguously no less stringent than the Federal rule, emission standard, or requirement.

(a) *Approval process.*

(1) If the Administrator finds that the criteria of this section and the criteria of § 63.91 are met, the Administrator will approve the State requirements, publish them in the **Federal Register**, and incorporate them, directly or by reference, in the appropriate subpart of part 63, without additional notice and opportunity for comment. Requirements approved under § 63.95 will be incorporated pursuant to requirements under part 68 of this chapter.

(2) If the Administrator finds that any one of the State adjustments to the Federal rule is in any way ambiguous with respect to the stringency of applicability, level of control, compliance and enforcement measures, or the compliance date for any affected source or emission point, the Administrator will either disapprove the

State request or consider the request under § 63.93.

(3) Within 60 days of receiving a complete request for approval under this section, the Administrator will either approve or disapprove the State request. If approved, the change will be effective upon signature of the **Federal Register** notice.

(4) Requirements submitted for approval under this section shall include either title V permits, title V general permits, Federal new source review permits, or State rules. Permits must already be issued to be used under this section.

(5) If the State uses a permit as the basis of alternative requirements under this section, the relevant permit terms and conditions must remain applicable to the source, even if the source takes steps that would otherwise release it from an obligation to have a permit.

(b) *Criteria for approval.* Any request for approval under this section shall meet all of the criteria of this section and § 63.91 before approval. The State shall provide the Administrator with:

(1) A demonstration that the public within the State has had adequate notice and opportunity to submit written comment on the State requirements, and

(2) A demonstration that each State adjustment to the Federal rule individually results in requirements that:

(i) Are unequivocally no less stringent than the otherwise applicable Federal rule with respect to applicability;

(ii) Are unequivocally no less stringent than the otherwise applicable Federal rule with respect to level of control for each affected source and emission point;

(iii) Are unequivocally no less stringent than the otherwise applicable Federal rule with respect to compliance and enforcement measures for each affected source and emission point; and

(iv) Assure compliance by every affected source no later than would be required by the otherwise applicable Federal rule.

(3) State adjustments to Federal section 112 rules which may be part of an approved rule under this section are:

(i) Lowering a required emission rate or *de minimis* level;

(ii) Adding a design, work practice, operational standard, emission rate or other such requirement;

(iii) Increasing a required control efficiency;

(iv) Increasing the frequency of required reporting, testing, sampling or monitoring;

(v) Adding to the amount of information required for records or reports;

(vi) Decreasing the amount of time to come into compliance;

(vii) Subjecting additional emission points or sources within a source category to control requirements;

(viii) Any adjustments allowed in a specific section 112 rule;

(ix) Minor editorial, formatting, and other nonsubstantive changes; or

(x) Identical alternative requirements previously approved by the Administrator in another local agency within the same State, if previously noticed that the alternative requirements would be applicable in the jurisdiction seeking approval under this section.

§ 63.93 Approval of State requirements that substitute for a section 112 rule.

Under this section a State may seek approval of State requirements which differ from a Federal section 112 rule for which they would substitute, such that the State requirements do not qualify for approval under § 63.92.

(a) *Approval process.*

(1) After receiving a complete request for approval under this section and making a preliminary determination on its equivalence, the Administrator will seek public comment on the State's request for a minimum of 30 days through a **Federal Register** notice. The Administrator will require that comments be submitted concurrently to the State.

(2) If, after review of public comments and any State responses to comments submitted to the Administrator, the Administrator finds that the criteria of this section and the criteria of § 63.91 are met, the Administrator will approve the State requirements under this section, publish the approved requirements in the **Federal Register**, and incorporate them directly or by reference, in the appropriate subpart of part 63. Requirements approved under § 63.95 will be incorporated pursuant to requirements under part 68 of this chapter.

(3) If the Administrator finds that any of the requirements of this section or § 63.91 have not been met, the Administrator may partially approve or disapprove the State requirements. For any partial approvals or disapprovals, the Administrator will provide the State with the basis for the partial approval or disapproval and what actions that State can take to make the requirements approvable.

(4) Requirements submitted for approval under this section shall include either: State rules, title V permits, title V general permits, Federal new source review permits, board and administrative orders, permits issued pursuant to permit templates, or State operating permits. Permits must already be issued to be used under this section.

(5) If the State uses a permit as the basis of alternative requirements under this section, the relevant permit terms and conditions must remain applicable to the source even if it takes steps that would otherwise release it from an obligation to have a permit.

(6) Within 180 days of receiving a complete request for approval under this section, the Administrator will either approve, partially approve, or disapprove the State request.

(b) *Criteria for approval.* Any request for approval under this section shall meet all of the criteria of this section and § 63.91 before approval. The State shall provide the Administrator with detailed documentation that the State requirements contain or demonstrate:

(1) Applicability criteria that are no less stringent than those in the respective Federal rule;

(2) Levels of control (including associated performance test methods) and compliance and enforcement measures that result in emission reductions from each affected source or accidental release prevention program requirements for each affected source that are no less stringent than would result from the otherwise applicable Federal rule;

(3) A compliance schedule that requires each affected source to be in compliance within a time frame consistent with the deadlines established in the otherwise applicable Federal rule; and

(4) At a minimum, the approved State requirements must include the following compliance and enforcement measures. (For requirements addressing the accidental release prevention program, minimum compliance and enforcement provisions are described in § 63.95.)

(i) The approved requirements must include monitoring or another method for determining compliance.

(ii) If a standard in the approved rule is not instantaneous, a maximum averaging time must be established.

(iii) The requirements must establish an obligation to periodically monitor for compliance using the monitoring or another method established in paragraph (b)(4)(i) of this section sufficient to yield reliable data that are representative of the source's compliance status.

§ 63.94 Approval of State permit terms and conditions that substitute for a section 112 rule.

Under this section a State may seek approval of State permit terms and

conditions to be implemented and enforced in lieu of specified existing and future Federal section 112 rules, emission standards, or requirements promulgated under section 112, for those affected sources permitted by the State under part 70 of this chapter. The State may not seek approval under this section for permit terms and conditions that implement and enforce part 68 requirements.

(a) *Up-front approval process.*

(1) A State must submit a request that meets the requirements of paragraph (b) of this section. After receiving a complete request for approval of a State program under this section and making a preliminary determination of equivalence, the Administrator will seek public comment for 21 days through a **Federal Register** notice. The Administrator will require that comments be submitted concurrently to the State.

(2) If, after review of all public comments, and State responses to comments submitted to the Administrator, the Administrator finds that the criteria of paragraph (b) of this section and the criteria of § 63.91 are met, the Administrator will approve the State program. The approved program will be published in the **Federal Register** and incorporated directly or by reference in the appropriate subpart of part 63.

(3) If the Administrator finds that any of the criteria of paragraph (b) of this section or § 63.91 have not been met, the Administrator will partially approve or disapprove the State program. For any partial approvals or disapprovals, the Administrator will provide the State with the basis for the partial approval or disapproval and what action the State can take to make the programs approvable.

(4) Within 90 days of receiving a complete request for approval under this section, the Administrator will either approve, partially approve, or disapprove the State request.

(b) *Criteria for up-front approval.* Any request for program approval under this section shall meet all of the criteria of this paragraph and § 63.91 before approval. The State shall provide the Administrator with:

(1)(i) To the extent possible, an identification of all specific sources in source categories listed pursuant to subsection 112(c) for which the State is seeking authority to implement and enforce alternative requirements under this section;

(ii) If the identified sources in any source category comprise a subset of the sources in that category within the State's jurisdiction, the State shall request delegation for the remainder of the sources in that category that are required to be permitted by the State under part 70 of this chapter. The State shall request delegation for the remainder of the sources in that category under another section of this subpart.

(iii) Prior to submitting a request for one or more sources within a source category, the State shall consult with their EPA Regional Office regarding the number of sources in a category eligible for submittal under this option. Based on the Regional Office's decision, the State shall limit the number of sources for which it submits permit requirements.

(2) To the extent possible, an identification of all existing and future section 112 emission standards for which the State is seeking authority under this section to implement and enforce alternative requirements.

(3) If, after approval of the initial list of source categories identified in paragraph (b)(2) of this section, the State adds source categories for approval under this option, the State shall submit an addendum to the up-front approval submission, and identify the addition to the lists. The Administrator will follow the process outlined in paragraph (a) of this section for up-front approval.

(4) A one-time demonstration that the State has an approved title V operating permit program and that the program permits the affected sources.

(c) *Approval process for alternative requirements.*

(1) After promulgation of a Federal section 112 rule, emission standard, or requirement for which the State has up-front approval to implement and enforce alternative requirements in the form of title V permit terms and conditions, the State shall provide the Administrator with pre-draft title V permit terms and conditions that are sufficient, in the Administrator's judgement, to allow the Administrator to determine equivalency. The permit terms and conditions shall reflect all of the requirements of the otherwise applicable Federal section 112 rule, emission standard, or requirement.

(2) [Reserved]

(3) If, the Administrator receives a complete request and finds the pre-draft title V permit terms and conditions submitted by the State meet the criteria of paragraph (d), the Administrator will approve the State's alternative requirements (by approving the pre-draft permit terms and conditions) and notify the State in writing of the approval.

(4) The Administrator may approve the State's alternative requirements on the condition that the State makes certain changes to the pre-draft title V permit terms and conditions and includes the changes in the complete pre-draft, proposed, and final title V permits for the affected sources. If the Administrator approves the alternative requirements on the condition that the State makes certain changes to them, the State shall make those changes or the alternative requirements will not be federally enforceable when they are included in the final permit, even if the Administrator does not object to the proposed permit. Until the Administrator affirmatively approves the State's alternative requirements (by approving the pre-draft permit terms and conditions) under this paragraph, and those requirements (permit terms) are incorporated into the final title V permit for any affected source, the otherwise applicable Federal emission standard(s) remain the federally enforceable and applicable requirements for that source.

(5) If, after evaluating the pre-draft title V permit terms and conditions that were submitted by the State, the Administrator finds that the criteria of paragraph (d) of this section have not been met, the Administrator will disapprove the State's alternative requirements and notify the State in writing of the disapproval. In the notice of disapproval, the Administrator will specify the deficient or nonapprovable elements of the State's alternative requirements.

(6) Within 90 days of receiving a complete request for approval under this paragraph, the Administrator will either approve, partially approve, or disapprove the State's alternative requirements.

(7) Nothing in this section precludes the State from submitting alternative requirements in the form of title V permit terms and conditions or title V general permit terms and conditions for approval under this paragraph at the same time the State submits its program to the Administrator for up-front approval under paragraph (a) of this section, provided that the Federal emission standards for which the State submits alternative requirements are promulgated at the time of the State's submittal. If the Administrator finds that the criteria of § 63.91 and the criteria of paragraphs (b) and (d) of this section are met, the Administrator will approve both the State program and the permit terms and conditions within 90 days of receiving a complete request for approval.

(d) *Approval criteria for alternative requirements.*

Any request for approval under this paragraph shall meet the following criteria. Taken together, the criteria in this paragraph describe the minimum contents of a State's equivalency demonstration for a promulgated Federal section 112 rule, emission standard, or requirement. To be approvable, the State submittal must contain sufficient detail to allow the Administrator to make a determination of equivalency between the State's alternative requirements and the Federal requirements. Each submittal of alternative requirements in the form of pre-draft permit terms and conditions for an affected source shall:

(1) Identify the specific, practicably enforceable terms and conditions with which the source would be required to comply upon issuance, renewal, or revision of the title V permit. The State shall submit permit terms and conditions that reflect all of the requirements of the otherwise applicable Federal section 112 rule, emission standard, or requirement. The State shall identify for the Administrator the specific permit terms and conditions that contain alternative requirements.

(2) Identify specifically how the alternative requirements in the form of permit terms and conditions are the same as or differ from the requirements in the otherwise applicable Federal section 112 rule, emission standard, or requirement (including any applicable requirements in subpart A or other subparts or appendices). The State shall provide this identification in a side-by-side comparison of the State's requirements in the form of permit terms and conditions and the requirements of the Federal section 112 rule, emission standard, or requirement.

(3) The State shall provide the Administrator with detailed documentation that demonstrates that the alternative requirements meet the criteria specified in § 63.93(b), *i.e.,* that the alternative requirements are at least as stringent as the otherwise applicable Federal requirements.

(e) *Incorporation of permit terms and conditions into title V permits.*

(1) After approval of the State's alternative requirements under this section, the State shall incorporate the approved permit terms and conditions into title V permits for the affected sources. The State shall issue or revise the title V permits according to the provisions contained in § 70.7 of this chapter. The alternative permit terms and conditions may substitute for the Federal requirements once they are contained in a valid title V permit. If the State does not write the alternative conditions, exactly as approved, into the permit, EPA may reopen the permit for cause per § 70.7(g) of this chapter, and the delegation may not occur.

(2) In the notice of pre-draft permit availability, and in each pre-draft, proposed, and final permit, the State shall indicate prominently that the permit contains alternative section 112 requirements. In the notice of pre-draft permit availability, the State shall specifically solicit public comment on the alternative requirements. In addition, the State shall attach all documents supporting the approved equivalency determination for those alternative requirements to each pre-draft, proposed, and final permit.

§ 63.95 Additional approval criteria for accidental release prevention programs.

(a) A State submission for approval of a part 68 program must meet the criteria and be in accordance with the procedures of this section, § 63.91, and, where appropriate, either § 63.92 or § 63.93.

(b) The State part 68 program application shall contain the following elements consistent with the procedures in § 63.91 and, where appropriate, either § 63.92 or § 63.93 of this subpart, for at least the chemicals listed in part 68 subpart F (''federally-listed chemicals'') that an approvable State Accidental Release Prevention program is regulating:

(1)(i) A demonstration of the State's authority and resources to implement and enforce regulations that are no less stringent than the regulations of part 68, subparts A through G and § 68.200 of this chapter; and

(ii) A requirement that any source subject to the State's part 68 program submit a Risk Management Plan (RMP) that reports at least the same information in the same format as required under part 68, subpart G of this chapter.

(2) A State's RMP program may require reporting of information not required by the Federal program, and these requirements (like any other additional State requirements) will become federally enforceable upon approval. The extent to which EPA will be able to help a State collect and report additional information through EPA's electronic RMP submission system will be determined on a case-by-case basis.

(3) Procedures for reviewing risk management plans and providing technical assistance to stationary sources, including small businesses.

(4) A demonstration of the State's authority to enforce all part 68 requirements must be made, including an auditing strategy that complies with § 68.220 of this chapter.

(c) A State may request approval for a program that covers all of the federally-listed chemicals (a ''complete program'') or a program covering less than all of the federally-listed chemicals (a ''partial program'') as long as the State takes delegation of the full part 68 program for the federally-listed chemicals it regulates.

§ 63.96 Review and withdrawal of approval.

(a) Submission of information for review of approval. (1) The Administrator may at any time request any of the following information to review the adequacy of implementation and enforcement of an approved rule or program and the State shall provide that information within 45 days of the Administrator's request:

(i) Copies of any State statutes, rules, regulations or other requirements that have amended, repealed or revised the approved State rule or program since approval or since the immediately previous EPA review;

(ii) Information to demonstrate adequate State enforcement and compliance monitoring activities with respect to all approved State rules and with all section 112 rules, emission standards or requirements;

(iii) Information to demonstrate adequate funding, staff, and other resources to implement and enforce the State's approved rule or program;

(iv) A schedule for implementing the State's approved rule or program that assures compliance with all section 112 rules and requirements that the EPA has promulgated since approval or since the immediately previous EPA review,

(v) A list of part 70 or other permits issued, amended, revised, or revoked since approval or since immediately previous EPA review, for sources subject to a State rule or program approved under this subpart.

(vi) A summary of enforcement actions by the State regarding violations of section 112 requirements, including but not limited to administrative orders and judicial and administrative complaints and settlements.

(2) Upon request by the Administrator, the State shall demonstrate that each State rule, emission standard or requirement applied to an individual source is no less stringent as applied than the otherwise applicable Federal rule, emission standard or requirement.

(b) Withdrawal of approval of a state rule or program.

(1) If the Administrator has reason to believe that a State is not adequately

implementing or enforcing an approved rule or program according to the criteria of this section or that an approved rule or program is not as stringent as the otherwise applicable Federal rule, emission standard or requirements, the Administrator will so inform the State in writing and will identify the reasons why the Administrator believes that the State's rule or program is not adequate. The State shall then initiate action to correct the deficiencies identified by the Administrator and shall inform the Administrator of the actions it has initiated and completed. If the Administrator determines that the State's actions are not adequate to correct the deficiencies, the Administrator will notify the State that the Administrator intends to withdraw approval and will hold a public hearing and seek public comment on the proposed withdrawal of approval. The Administrator will require that comments be submitted concurrently to the State. Upon notification of the intent to withdraw, the State will notify all sources subject to the relevant approved rule or program that withdrawal proceedings have been initiated.

(2) Based on any public comment received and any response to that comment by the State, the Administrator will notify the State of any changes in identified deficiencies or actions needed to correct identified deficiencies. If the State does not correct the identified deficiencies within 90 days after receiving revised notice of deficiencies, the Administrator shall withdraw approval of the State's rule or program upon a determination that:

(i) The State no longer has adequate authorities to assure compliance or resources to implement and enforce the approved rule or program, or

(ii) The State is not adequately implementing or enforcing the approved rule or program, or

(iii) An approved rule or program is not as stringent as the otherwise applicable Federal rule, emission standard or requirement.

(3) The Administrator may withdraw approval for part of a rule, for a rule, for part of a program, or for an entire program.

(4) Any State rule, program or portion of a State rule or program for which approval is withdrawn is no longer Federally enforceable. The Federal rule, emission standard or requirement that would have been applicable in the absence of approval under this will be the federally enforceable rule, emission standard or requirement.

(i) Upon withdrawal of approval, the Administrator will publish an expeditious schedule for sources subject to the previously approved State rule or program to come into compliance with applicable Federal requirements. Such schedule shall include interim emission limits where appropriate. During this transition, sources must be operated in a manner consistent with good air pollution control practices for minimizing emissions.

(ii) Upon withdrawal, the State shall reopen, under the provisions of § 70.7(f) of this chapter, the part 70 permit of each source subject to the previously approved rules or programs in order to assure compliance through the permit with the applicable requirements for each source.

(iii) If the Administrator withdraws approval of State rules applicable to sources that are not subject to part 70 permits, the applicable State rules are no longer Federally enforceable.

(iv) If the Administrator withdraws approval of a portion of a State rule or program, other approved portions of the State rule or program that are not withdrawn shall remain in effect.

(v) Any applicable Federal emission standard or requirement shall remain enforceable by the EPA as specified in section 112(l)(7) of the Act.

(5) If a rule approved under § 63.93 is withdrawn under the provisions of § 63.96(b)(2) (i) or (ii), and, at the time of withdrawal, the Administrator finds the rule to be no less stringent than the otherwise applicable Federal requirement, the Administrator will grant equivalency to the previously approved State rule under the appropriate provisions of this part.

(6) A State may submit a new rule, program or portion of a rule or program for approval after the Administrator has withdrawn approval of the State's rule, program or portion of a rule or program. The Administrator will determine whether the new rule or program or portion of a rule or program is approvable according to the criteria and procedures of § 63.91 and either of § § 63.92, 63.93 or 63.94.

(7) A State may voluntarily withdraw from an approved State rule, program or portion of a rule or program by notifying the EPA and all affected sources subject to the rule or program and providing notice and opportunity for comment to the public within the State.

(i) Upon voluntary withdrawal by a State, the Administrator will publish a timetable for sources subject to the previously approved State rule or program to come into compliance with applicable Federal requirements.

(ii) Upon voluntary withdrawal, the State must reopen and revise the part 70 permits of all sources affected by the withdrawal as provided for in this section and § 70.7(f), and the Federal rule, emission standard, or requirement that would have been applicable in the absence of approval under this subpart will become the applicable requirement for the source.

(iii) Any applicable Federal section 112 rule, emission standard or requirement shall remain enforceable by the EPA as specified in section 112(l)(7) of the Act.

(iv) Voluntary withdrawal shall not be effective sooner than 180 days after the State notifies the EPA of its intent to voluntarily withdraw.

§ 63.97 Approval of a State program that substitutes for section 112 requirements.

Under this section, a State may seek approval of a State program to be implemented and enforced in lieu of specified existing or future Federal emission standards or requirements promulgated under section 112. A State may not seek approval under this section for a program that implements and enforces part 68 requirements.

(a) *Up-front approval process.*

(1) After receiving a complete request for approval of a State program submitted under paragraph (b)(1) or (b)(2) of this section and making a preliminary determination on whether to approve it, the Administrator will seek public comment for 21 days through a **Federal Register** notice. At its discretion, the State may include in this submittal a request for approval of specific alternative requirements under paragraph (b)(3) of this section.

(2) [Reserved]

(3) The Administrator will require that comments be submitted concurrently to the State.

(4) If, after review of all public comments and State responses to comments submitted to the Administrator, the Administrator finds that the criteria of paragraph (b) of this section and the criteria of § 63.91 are met, the Administrator will approve or partially approve the State program. The approved State program will be published in the **Federal Register** and incorporated, directly or by reference, in the appropriate subpart of part 63.

(5) If the Administrator finds that any of the criteria of paragraph (b) of this section or § 63.91 have not been met, the Administrator will partially approve or disapprove the State program.

(6) The Administrator will either approve, partially approve, or disapprove the State request:

(i) Within 90 days after receipt of a complete request for approval of a State program submitted under paragraph (b)(1) or (b)(2) of this section; or

(ii) Within 180 days after receipt of a complete request for approval of a State

program submitted under paragraphs (b)(1) or (b)(2) and paragraph (b)(3) of this section.

(b) *Criteria for up-front approval.* Any request for program approval under this section shall meet all of the criteria of this paragraph and § 63.91 before approval.

(1) For every request for program approval under this section, the State shall provide the Administrator, to the extent possible, with an identification of the initial specific source categories listed pursuant to section 112(c) and an identification of all existing and future section 112 emission standards or other requirements for which the State is seeking authority to implement and enforce alternative requirements under this section.

(2) If, after approval of the initial list of specific source categories identified in paragraph (b)(1) of this section, the State adds source categories for approval under this option, the State shall submit an addendum to the approval submission, and identify the addition to the list.

(3) In addition, the State may provide the Administrator with one or more of the following program elements for approval under this paragraph:

(i) Alternative requirements in State rules, regulations, or general permits (or other enforceable mechanisms) that apply generically to one or more categories of sources and for which the State seeks approval to implement and enforce in lieu of specific existing Federal section 112 emission standards or requirements. The Administrator may approve or disapprove the alternative requirements in these rules, regulations, or permits when approving or disapproving the State's up-front submittal under this paragraph. After approval of the alternative generic rules, regulations or general permits, and after new Federal emission standards or requirements are promulgated, the State may extend the applicability of approved generic alternative requirements to additional source categories by repeating the approval process specified in paragraph (a) of this section. To be approvable, any request for approval of generic alternative requirements during the up-front approval process shall meet the criteria in paragraph (d) of this section.

(ii) A description of the mechanisms that are enforceable as a matter of State law that the State will use to implement and enforce alternative requirements for area sources. The mechanisms that may be approved under this paragraph include title V permits, title V general permits, Federal new source review permits, board and administrative orders, permits issued pursuant to permit templates, state permits, and State rules that apply to categories of sources. The State shall demonstrate to the Administrator that the State has adequate resources and authorities to implement and enforce alternative section 112 requirements using the State mechanisms.

(c) *Approval process for alternative requirements.*

(1) After promulgation of a Federal emission standard or requirement for which the State has program approval under this section to implement and enforce alternative requirements, the State shall provide the Administrator with alternative requirements that are sufficient, in the Administrator's judgement, to allow the Administrator to determine equivalency under paragraph (d) of this section. The alternative requirements shall reflect all of the requirements of the otherwise applicable Federal section 112 rule, emission standard, or requirement, including any alternative requirements that the State is seeking to implement and enforce. Alternative requirements submitted for approval under this paragraph shall be contained in rules, regulations, general permits, or other mechanisms that apply to and are enforceable under State law for categories of sources. State policies are not approvable under this section unless they are incorporated into specific, enforceable, alternative requirements in rules, permits, or other mechanisms that apply to categories of sources.

(2) [Reserved]

(3) After receiving a complete request for approval under this section and making a preliminary determination on its equivalence, the Administrator will seek public comment for a minimum of 21 days through a **Federal Register** notice. The Administrator will require that comments be submitted concurrently to the State.

(4) If, after review of public comments and any State responses to comments submitted to the Administrator, the Administrator finds that the criteria of paragraph (d) of this section and the criteria of § 63.91 are met, the Administrator will approve the State's alternative requirements. The approved alternative requirements will be published in the **Federal Register** and incorporated, directly or by reference, in the appropriate subpart of part 63.

(5) If the Administrator finds that any of the requirements of paragraph (d) of this section or § 63.91 have not been met, the Administrator will partially approve or disapprove the State's alternative requirements. For any partial approvals or disapprovals, the Administrator will provide the State with the basis for the partial approval or disapproval and what action the State can take to make the alternative requirements approvable.

(6) Within 180 days of receiving a complete request for approval under this paragraph, the Administrator will either approve, partially approve, or disapprove the State request.

(7) Nothing in this section precludes the State from submitting alternative requirements for approval under this paragraph at the same time the State submits its program to the Administrator for up-front approval under paragraph (a) of this section, provided that the Federal rules, emission standards, or requirements for which the State submits alternative requirements are promulgated at the time of the State's submittal. If the Administrator finds that the criteria of § 63.91 and the criteria of paragraphs (b) and (d) of this section are met, the Administrator will approve both the State program and the alternative requirements within 180 days of receiving a complete request for approval. Alternatively, following up-front approval, the State may submit alternative requirements for approval under this paragraph at any time after promulgation of the Federal emission standards or requirements.

(d) *Approval criteria for alternative requirements.* Any request for approval under this paragraph shall meet the following criteria. Taken together, the criteria in this paragraph describe the minimum contents of a State's equivalency demonstration for a promulgated Federal section 112 rule, emission standard, or requirement. To be approvable, the State submittal must contain sufficient detail to allow the Administrator to make a determination of equivalency between the State's alternative requirements and the Federal requirements. Each submittal of alternative requirements for a category of sources shall:

(1) Include copies of all State rules, regulations, permits, or other enforceable mechanisms that contain the alternative requirements for which the State is seeking approval. These documents shall also contain requirements that reflect all of the requirements of the otherwise applicable Federal section 112 rules, emission standards or requirements for which the State is not submitting alternatives. The State shall identify for the Administrator the specific requirements with which sources in a source category are required to comply, including the specific alternative requirements.

(2) Identify specifically how the alternative requirements are the same as or differ from the requirements in the otherwise applicable Federal rule, emission standards, or requirements (including any applicable requirements in subpart A or other subparts or appendices). The State shall provide this identification in a side-by-side comparison of the State's requirements and the requirements of the Federal rule, emission standards, or requirements.

(3) The State shall provide the Administrator with detailed documentation that demonstrates the State's belief that the alternative requirements meet the criteria specified in § 63.93(b) of this subpart, *i.e.,* that the alternative requirements are at least as stringent as the otherwise applicable Federal requirements.

[FR Doc. 00–22968 Filed 9–13–00; 8:45 am]

BILLING CODE 6560–50–U

Federal Register

Thursday,
September 14, 2000

Part V

Department of Transportation

Federal Aviation Administration

14 CFR Parts 23, 25, and 33
Airworthiness Standards; Bird Ingestion; Final Rule

DEPARTMENT OF TRANSPORTATION

Federal Aviation Administration

14 CFR Parts 23, 25, 33

[Docket No. FAA–1998–4815; Amendment No. 23–54, 25–100 and 33–20]

RIN 2120–AF84

Airworthiness Standards; Bird Ingestion

AGENCY: Federal Aviation Administration (FAA), DOT.

ACTION: Final rule.

SUMMARY: This amendment revises the bird ingestion type certification standards for aircraft turbine engines to better address the actual bird threat encountered in service. This amendment also establishes nearly uniform bird ingestion standards for aircraft turbine engines certified by the United States under FAA standards and by the Joint Aviation Authorities (JAA) countries under JAA standards, thereby simplifying airworthiness approvals for import and export.

EFFECTIVE DATES: December 13, 2000.

FOR FURTHER INFORMATION CONTACT: Marc Bouthillier, Engine and Propeller Directorate, Engine and Propeller Standards Staff, ANE–110, Federal Aviation Administration, New England Executive Park, Burlington, Massachusetts 01803–5299; telephone (781) 238–7120; facsimile (781) 238–7199.

SUPPLEMENTARY INFORMATION:

Availability of Final Rules

An electronic copy of this document may be downloaded using a modem and suitable communications software from the FAA regulations section of the FedWorld Electronic bulletin board service (telephone: (703) 321–3339) or the Government Printing Office's (GPO) electronic bulletin board service (telephone: (202) 512–1661).

Internet users may reach the FAA's web page at http://www.faa.gov/avr/arm/nprm/nprm.htm or the GPO's web page at http://www.access.gpo.gov/nara for access to recently published rulemaking documents.

Any person may obtain a copy of this document by submitting a request to the Federal Aviation Administration, Office of Rulemaking, ARM–1, 800 Independence Avenue SW., Washington, DC 20591, or by calling (202) 267–9680. Communications must identify the amendment number or docket number of this final rule.

Persons interested in being placed on the mailing list for future rulemaking documents should request from the above office a copy of Advisory Circular No. 11–2A, Notice of Proposed Rulemaking Distribution System, which describes the application procedure.

Small Business Regulatory Enforcement Fairness Act

The Small Business Regulatory Enforcement Fairness Act (SBREFA) of 1996, requires the FAA to comply with small entity requests for information or advice about compliance with statutes and regulations within its jurisdiction. Therefore, any small entity that has a question regarding this document may contact their local FAA official. Internet users can find additional information on SBREFA on the FAA's web page at *http://www.faa.gov/avr/arm/sbrefa.htm* and may send electronic inquiries to the following Internet address: 9–AWA–SBREFA@faa.gov.

Background

Statement of the Problem

In 1976, the National Transportation Safety Board (NTSB), in response to an accident involving a wide-bodied aircraft that may have experienced multiple bird ingestion into the engines, issued Safety Recommendation A–76–64, recommending that the FAA, ''amend 14 CFR 33.77 to increase the maximum number of birds in the various size categories required to be ingested into turbine engines with large inlets.'' Safety Recommendation A–76–64 also stated, ''these increased numbers and sizes should be consistent with the birds ingested during service experience of these engines.'' In response to the recommendation, the FAA sponsored an industry wide study of the types, sizes, and quantities of birds that had been ingested into aircraft turbine engines of all sizes, and the resulting affects on engine performance. Subsequently, the FAA requested that the Aerospace Industries Association (AIA) analyze the data, and report back to the FAA. Based on the AIA report, the FAA determined the actions to be taken, as well as the disposition of the NTSB safety recommendation A–76–64. The FAA concluded that the regulations contained in § 33.77 should be modified to increase the severity of the bird ingestion testing requirements regarding large, high bypass ratio engines. In addition, the FAA found that it should update the design and testing requirements for all engine sizes to reflect the actual numbers and bird sizes being ingested. This effort was adopted as a part 33 and Joint Aviation Regulations for engines (JAR–E) harmonization project and was selected as an Aviation Rulemaking Advisory Committee (ARAC) project.

Industry Study

There are three separate data collection efforts within the industry study. The largest and most comprehensive collection is the data for large commercial transport engines with fan diameters between 80 and 100 inches and spanning a time period from entry into service through 1987. This collection includes FAA sponsored contracts which are summarized in report number DOT/FAA/CT–84/13, dated September 1984. A less extensive collection effort involving engines with inlet areas less than 1000 square inches was also performed. Data for this class of engine is less comprehensive in that it involves reporting from a very diverse aircraft operator base including General Aviation operators as well as some commuter and part 121 operators. The third collection effort was an extension of the first, but includes only data for ingestion of birds weighing greater than 2.5 pounds, for the time period from entry into service through September 1995 for large commercial transport engines with fan diameters 60 inches and larger.

The results of the first two data collections were compared to the historical design standards and certification bases for the family of engines comprised in the database. The study group identified bird ingestion threats both more and less severe than were addressed in either engine design practices of the time, or in part 33. A proposal for a change in the medium bird ingestion rules was presented by the AIA to the FAA in AIA report dated October 17, 1986.

The FAA then asked for expansion of the database to include both heavier birds and coordination of the data and proposed rules with the European Association of Aerospace Industries (AECMA). This coordination effort included consensus between the two industry groups on the completeness and accuracy of the data, and validation of the analytical approach by independent statisticians from Allied Signal, Boeing, General Electric, Pratt & Whitney, Rolls-Royce, and Snecma. The AIA and AECMA delivered a report to the FAA on November 10, 1988. This data collection has become known as the ''AIA database.'' The substance of the latter report is a primary basis for the current NPRM.

Three additional bird ingestion studies were contracted by the FAA to corroborate the findings of the collections described above. The results of these studies may be found in reports

numbered DOT/FAA/CT–90/13, ''Study of Bird Ingestions Into Small Inlet Area Aircraft Turbine Engines,'' dated December 1990, DOT/FAA/CT–91/17, ''Bird Ingestion Into Large Turbofan Engines,'' dated May 1992, and DOT/FAA/CT–91/32, ''Engine Bird Ingestion Experience of the Boeing 737 Aircraft—Expanded Data Base'', dated July 1992. The data contained in these reports supports the data summaries of the related industry studies.

Subsequently, a further review of the data for birds heavier than 2.5 pounds (lb) was requested of industry by the FAA and JAA. The resulting data is contained in an AIA/AECMA report dated March 29, 1996 which includes all relevant reports of bird ingestions for commercial transport engines with fan diameters 60 inches and greater, for the time period from entry into service through September 30, 1995.

Aviation Rulemaking Advisory (ARAC) Project

In December 1992, the FAA requested the ARAC to evaluate the need for new bird ingestion standards. The task, in turn, was assigned to the Engine Harmonization Working Group (EHWG) of the ARAC on Transport Airplane and Engine (TAE) Issues on December 11, 1992. On April 9, 1997, the TAE issues group recommended to the FAA that it proceed with rulemaking and associated advisory material even though one working group member disagreed with a portion of the proposal. The FAA published a notice of proposed rulemaking (NPRM) on December 11, 1998 (63 FR 68636). This rule reflects the ARAC recommendations.

Discussion of Comments

All interested persons have been afforded an opportunity to participate in this rulemaking. Due consideration has been given to all comments contained in the nine comment letters received, which represent domestic and foreign industry, and foreign airworthiness authorities. Nine comments generally supported publication of the rule as a benefit over the existing regulations.

One commenter notes that the companion Advisory Circular (AC) has not been published for comment.

The FAA agrees in part. An extensive AC has been drafted that provides one method, but not the only method, for showing compliance with this new rule for bird ingestion. The FAA expects that the AC will be available for comment prior to the effective date of the new rule. The FAA does not agree that this final rule should be delayed pending completion of that AC.

Two commenters state that the safety intent and justification of the proposed rule should be clarified.

The FAA disagrees. The NPRM preamble clearly states that the objective of the proposed rule is to provide a freedom from risk of hazard due to bird ingestion at least equal to ten to the minus eighth power (1E–8) per aircraft cycle. The objective is further defined for single large birds and both small and medium flocking birds. Justification for various aspects of the rule is given throughout the preamble section of the NPRM.

Several comments were received concerning bird control programs at airports. One commenter states that additional actions are necessary to better control bird populations on and around airports. Two commenters state that airport bird control programs and flight crew awareness training are not effective in mitigating the bird threat, and should not be considered relative to this rulemaking. One commenter states that airport bird control programs and flight crew awareness training programs are generally being decreased in scope.

The FAA disagrees that airport controls programs and flight crew awareness training are ineffective in mitigating the bird ingestion threat. The FAA believes airport bird control programs are effective in mitigating the bird ingestion threat on and around airports. It must be noted that the overall bird ingestion experience base of commercial aircraft is a combination of aircraft capability, airport and environ controls, air traffic control, and flight crew awareness. Only by a combination of efforts will the bird ingestion threat to aircraft be kept to acceptable levels. It should be noted that the proposal did not specifically consider airport controls, air traffic controls, or flight crew effects in the design of the rule, other than assuming current levels of effectiveness will be maintained. Also, airport wildlife controls themselves are beyond the scope of this rulemaking effort.

It should also be noted that the FAA has recently published a number of policy and guidance related documents pertaining to airport wildlife control plans, land use practices, and aircraft bird strike reporting. The FAA also participates in various government and industry focus groups related to wildlife hazards on and around airports, maintains a bird strike database, and has contracted with the Smithsonian institution to provide a service to identify and size birds involved in aircraft strike events. As a result of these efforts, the emphasis on wildlife hazard identification and control measures is expanding industry wide.

One commenter states that fan blade containment after a bird ingestion event is a concern.

The FAA agrees in part. The FAA agrees that containment of hazardous fragments after a bird strike present a serious concern, however containment requirements are beyond the scope of this rulemaking effort. The proposed rule, for large, small and medium birds has the same requirement, meaning the applicant must show that release of hazardous fragments through the engine casing following a bird strike is precluded. Also, § 33.19 requires that the energy levels and trajectories of fragments resulting from rotor blade failure that lie outside the engine cases must be defined (*e.g.,* fragments exiting through inlet structure). The FAA does not agree, however, that this concern warrants delay in issuing this final rule.

One commenter states that a full flight engine configuration should be utilized for certification tests.

The FAA agrees in principle. The test engine configuration must be fully representative of a type design engine insofar as bird ingestion requirements are concerned. Also, it is standard practice to use flight type inlets, cowls, and primary nozzles, or equivalents for these tests. The use of such flight type aircraft components are needed to evaluate the energy and trajectory of fragments which lie outside the engine type design cases. No changes to the proposed rule are required since compliance with the requirements will dictate the use of appropriate inlet and cowl hardware for any given design.

One commenter states that a 10-percent tolerance band on certification test controlling parameters is excessive.

The FAA does not agree. The 10-percent tolerance band addresses the Critical Ingestion Parameter (CIP), which is the parameter for a particular bird ingestion scenario that is most critical relative to the pass/fail criteria contained in the rule. The other controlling parameters must be maintained such that the CIP itself does not vary more than 10-percent. In practice, most controlling parameters can be maintained to a relatively tight tolerance, and this practice will not change. The AC will contain further guidance on one method, but not the only method, to show compliance with this requirement.

One commenter states that the makeup of the rulemaking database is not clearly described within the NPRM.

The FAA agrees in part. The database could be described in more detail. The database is made up of known revenue-

service engine bird ingestion events from the time period from entry into service through September 1995. Data collections included International Civil Aviation Organization (ICAO) data, airframe manufacturer data, engine manufacturer data, FAA data and any other data presented that could be cross referenced to an actual engine ingestion. The data comes from a cross section of engine types, and for transport category aircraft engines it encompasses approximately 90 million aircraft flights. The data points utilized are those which were identified as actual engine ingestion events, where an engine ingestion event was defined as the presence of bird debris within the engine inlet or engine flow paths. Bird debris was defined as feathers, flesh, or body fluids that could be identified as having come from a bird. Techniques used for identification of debris were visual identification of feathers, forensic laboratory methods, and black light identification of body fluid smears on the engine inlet flow path and engine structure. If the evidence positively indicated an ingestion, but a positive identification of the bird species could not be made, the data was entered as an ingestion without an associated weight. Data representing bird strikes to the aircraft structure (other than engines) was not utilized in the design of this rule. Simple bird species distribution data (*i.e.,* population and size distributions occurring in nature) was also not utilized in the design of the rule.

A series of bird ingestion data collection efforts, as described above, collated data for a variety of engine sizes and types. Three parameters were estimated from the data collection for events where the bird size, bird type, aircraft model, engine model, flight regime, and outcome where reasonably known. These were the single engine ingestion rate versus bird weight; multiple engine ingestion rate versus bird weight; and the ratio of the number of engine power loss events to the number of ingestion events versus bird weight. The probability of a dual engine power loss on a twin engine aircraft was computed by multiplying the square of the power loss ratio by the multiple engine ingestion rate for twin engine positions. Twin engine positions were defined as the inboard positions on four engine airplanes, the wing positions of three engine airplanes, and the wing positions on two engine airplanes. For the purpose of the above data reduction, a power loss was defined as 50-percent or more loss of power or thrust. The data was collected and evaluated in a manner which would provide a good representation of the bird ingestion threat to aircraft engines in service during that time period.

The FAA does not agree, however, that the description of the database contained in the NPRM was deficient, or that this final rule should be delayed.

Two commenters state that this rulemaking database does not reflect actual service experience, and is not accurate or complete.

The FAA disagrees. As discussed in the paragraph above, the rulemaking database is comprised of data from actual engine bird ingestion events where the bird species, bird size, bird number, aircraft model, engine model, regime of flight, and outcome where all reasonably known. Also as noted above, for transport category aircraft engines, the database reflects known bird ingestion events encompassing approximately 90 million aircraft flights of experience covering a broad cross-section of aircraft types. This rulemaking database is a good representation of what aircraft engines have actually experienced over the past 25 years. Lastly, since this is the actual experience of the fleet, it also includes whatever effects there might be from increased bird populations in this time period.

One commenter states that recent events have shown that the proposed requirements, relative to bird mass and flock size, are less severe than occur in nature.

The FAA agrees in part. Events can occur that are beyond the severity of the proposed requirements. This was stated in the NPRM preamble. The proposed rule was not designed to encompass the worst possible combination of all factors, as this is impossible to predict, and would be beyond the capability of current engine technology. The FAA believes the proposed requirements are reasonable relative to the state goal of reducing the bird threat hazards to aircraft by an order of magnitude. It should also be noted that a number of new engine models have been designed and evaluated to these proposed standards, and have generally performed well in revenue service.

The FAA does not agree that the possibility of a bird ingestion event more severe than already contemplated in the proposed rule should warrant a delay in issuing a final rule.

One commenter states that there has been significant growth in some bird populations over the past 10 years.

The FAA agrees in part. The FAA acknowledges that certain species of birds have experienced significant population and distribution increases over the past several years, and should be monitored for any effect on the bird threat to aircraft operations. The FAA does not believe, however, that this warrants a delay in issuing this final rule.

Two commenters state that this rulemaking database focused only on past experience, and made no attempt to predict future changes to the bird threat.

The FAA agrees in part. While this rulemaking database focused only on actual events which have occurred in revenue service, the rule was not designed to meet predicted future changes in the bird threat environment. The FAA believes it would be impossible to accurately predict threat changes, more or less in severity, as the overall experience base is a function of bird population, bird distribution, aircraft capability, engine capability, airport and airport environmental control measures, air traffic control operational requirements, air traffic control alert reports, and flight crew awareness. The FAA believes it is impossible to integrate these various factors into an accurate prediction of bird threat changes suitable for rulemaking, and believes that the possibility of such changes does not warrant delay in issuing this final rule. However, the FAA agrees that the factors noted above should be reviewed at periodic intervals to assure that the bird ingestion certification standards are adequate to meet the overall threat of bird ingestion, and that no individual factor is allowed to worsen to a significant degree.

One commenter states that the large bird requirement should be 12–15 lbs.

The FAA does not agree. While birds larger in size than the standard for ''large birds'' in the proposed rule can occur in revenue service, a review service data indicates that the proposed sliding scale (4–8 lbs. as a function of inlet area) for the single large bird requirement is reasonable relative to the stated goal of reducing the hazards to aircraft by an order of magnitude. The FAA does not agree the large bird standard needs to be changed.

One commenter states that the proposed requirement for § 33.76(c)(2) needs to be revised to allow the use of certification data from previous programs.

The FAA disagrees. It is not necessary for a rule to contain language allowing the use of existing certification data. Any certification data held by the applicant may be utilized provided that the data is applicable to the product in question, and approved by the FAA. The AC will contain a discussion on what sources of data could be

acceptable for the purpose of compliance findings.

One commenter states that the proposed requirements for §§ 23.903 and 25.903 are not clear.

The FAA disagrees. The text changes were required only to provide reference to new § 33.76, and uses the same format as the previous rule.

One commenter states that the proposed requirements for §§ 23.903 and 25.903 will allow inappropriate use of previous engine bird ingestion certification requirements instead of new § 33.76 when determining engine model eligibility for new aircraft applications.

The FAA disagrees. The proposed text is consistent with current §§ 23.903 and 25.903, and allows flexibility for installation of pre § 33.76 certification basis engines into new aircraft applications at the FAAs discretion. The FAA believes it would be inappropriate to preclude by regulation the installation of pre § 33.76 engines which have demonstrated acceptable bird ingestion capabilities in revenue service. For transport category aircraft, the existing requirements under §§ 21.21(b)(2), 25.903(a) and 25.1091(d)(2)/(e) have been identified as providing for the evaluation of proposed installations relative to bird ingestion service history. The FAA will review the application of these regulations to assure that they provide for the necessary level of evaluation of any proposed installation utilizing pre § 33.76 model aircraft engines. Lastly, as part of this review, it was observed that current § 25.1091 must be revised to include an appropriate reference to the new requirements of § 33.76. Therefore, § 25.1091 is also revised by this final rule action.

One commenter states that the FAA air traffic control (ATC) operational procedures are now allowing high speed operations below 10,000 ft. altitude, and this should be considered with respect to these bird ingestion requirements.

The FAA agrees in part. This rule is based on the expectation that the majority of operations below 10,000 ft. would be at less than 250 knots. However, studies into changing ATC operational procedures have allowed unrestricted operation at speeds above 250 knots near some Class B airports, and at altitudes where bird encounters are most likely to occur. The new small and medium bird requirements are structured to account for higher speeds. However the large bird requirement utilizes a 200-knots default bird speed value. Higher aircraft speeds at low altitudes could also result in shallower climb profiles, possibly resulting in an aircraft spending more time in a higher risk bird threat environment then previously assumed. Therefore, the FAA will institute a follow-on rulemaking action to determine whether additional changes to the bird requirements are necessary based on these operational considerations. Also, the FAA will include material in the AC to address this subject relative to the large bird test requirements. The FAA does not believe, however, that this operational consideration warrants delaying this final rule.

One commenter states that the NPRM explanation for choosing the 200 knots over a 250 knots bird speed value for large bird tests needs clarification.

The FAA agrees in part. For a given turbine engine design, a specific bird speed will provide the least margin to the pass/fail criteria of § 33.76. For critical static structure (*e.g.,* inlet guide vane), the higher speed will generally be more severe due to simple momentum transfer at impact. However for critical rotating stages of blades, there will be an optimum bird speed which results in maximum damage to that rotating stage. Bird speeds faster or slower than this optimum will result in less severe damage. This is due to the combined effects of bird speed, rotor blade tangential velocity, and blade twist angle. The worst case combination of these factors will result in the highest bird since mass absorbed by the blade at the worst impact angle, and therefore results in the highest blade stresses at the blade's critical location. For example, most conventional high bypass turbofan designs will have critical speeds in the 150–220–knots range, depending upon specific fan blade design characteristics. While the FAA plans further review of this aspect of the large bird certification test, the FAA does not believe that this warrants delay in issuing this final rule.

Five commenters state that the FAA should reconsider the JAA position of including a requirement addressing intermediate flocking birds greater than 2.5 lbs.

The FAA agrees in part. The FAA agrees to reconsider the overall JAA position as part of future rulemaking study, and still believes that the Joint Aviation Requirements (JAR) and the FAA regulations should eventually be harmonized in this regard. The FAA does not agree, however, that the difference between this final rule and the JAA's current position warrants delay in issuing this final rule pending further study.

Two commenters state that the FAA does not understand the JAA position on intermediate flocking birds.

The FAA disagrees. The FAA understands that the rationale for the additional JAA intermediate flocking bird requirement is to ensure that new engines will have the same level of capability (for flocking birds greater than 2.5 lbs.) as current in-service engines have demonstrated. The FAA does believe that the new requirements of § 33.76, overall, will provide a fleet of engines of overall increased capability when compared to the fleet of engines based on current § 33.77 requirements.

Three commenters state that the FAA and JAA should consider alternatives to the JAA intermediate flocking bird requirement of JAR–E 800(b)(2), as it does not meet its stated objective.

The FAA agrees in part. The FAA agrees to participate in a new rulemaking study to develop a meaningful alternative to the JAR intermediate flocking bird requirement. The FAA does not agree that the 12-percent unbalance requirement of proposed JAR–E 800(b)(2) can be relied upon to achieve the stated intent of the JAR–E rule as described. The FAA also does not believe that this final rule should be delayed pending any study of this issue.

Three commenters state that the proposed requirements do not adequately cover the flocking bird range of 2.5–8 lbs.

The FAA disagrees. The proposed requirements have taken into account flocking birds in this category based on (1) the historical performance of engines currently in service, and (2) based on the overall increased severity of the new requirements. The FAA believes that the new requirements of § 33.76, overall, will provide a fleet of engines of increased capability in this regard when compared to be fleet of engines based on current § 33.77 requirements. However, since the flocking bird capability in this bird size range may not be directly evaluated for each individual design at the time of certification, the FAA agrees to participate in a new rulemaking study of evaluate this comment further. The FAA does not agree, however, that this final rule should be delayed pending any study of that issue.

One commenter states that the proposed requirements meet the flocking bird objections for conventional designs (*e.g.,* for designs which the database directly represents).

The FAA agrees that the rulemaking database and related assumptions which are part of this rule are most closely to the conventional designs which make up the database. Therefore, for each designs, there is a high degree of

confidence that this new rule's stated objective can be met.

Two commenters state that the proposed requirements may not meet the flocking bird objectives for new unconventional design technologies which have no historical data from which to evaluate capability.

The FAA agrees in part. The database on which this rule finds support, is made up of primarily conventional designs, and that the assumptions made when developing this rule most closely relate to those designs. However, it must be noted that the new § 33.76 is generally a more severe set of requirements then currently § 33.77, and that the overall effect of the new rule will be a world fleet of increased capability when compared to the world fleet based on current § 33.77 requirements. Therefore, the overall rule objective of decreasing the risk from bird ingestion events by an order of magnitude will be met at the world fleet level. Also, since the new requirements do not include specific test requirements for flocking birds greater than 2.5 lbs., the possibility exists for disparities in engine capability from one model series to another, regardless of conventional or unconventional designs. The FAA believes it prudent to address this concern by further review of available service data to determine whether the chosen standards sufficiently cover the level of safety desired for this rule, and to assure that the specific level of safety demonstrated by each engine model certified is acceptable. The FAA agrees to participate in a new rulemaking study to evaluate this comment further, but does not agree that this final rule should be delayed pending that study.

Two commenters state that the proposed requirements do not provide any improvement in power loss rate over current requirements.

The FAA disagrees. It must be noted that the new § 33.76 is generally a more severe set of requirements then current § 33.77, and that the overall effect of the new rule will be a world fleet of increased capability when compared to the world fleet based on current § 33.77 requirements, of which power loss rate is one measure.

One commenter states that there is no need for expanded flocking bird requirements beyond this proposal.

The FAA agrees that new § 33.76 will be beneficial to overall world fleet capability. The FAA also believes, however, that a new review of available is prudent to evaluate the current state of the bird threat in service, and that additional rulemaking action could result.

Two commenters state that a new rulemaking study should be implemented to develop additional standards for run should be not be delayed pending further study.

Finally, the FAA has made the following minor editorial changes to better clarify this rule. These changes do not affect the scope of the rule or change the intent of these sections.

§ 33.76(a)(2) text was modified slightly to more clearly state the intent of the rule. There are no changes to the requirements.

§ 33.76(b)(4) was revised to more clearly state the intent of the rule, which does not include an actual ''waiver'' of the large bird requirements as stated in the NPRM, but was intended to specify an additional method of showing compliance to these requirements using § 33.76(a) certification data when appropriate. Therefore the actual certification substantiation requirements of this section are unchanged from the NPRM proposal, with the only change being a more accurate description of the compliance option under this subsection that is available to the applicant.

It was determined that the title of § 33.77 should be revised to specify the one remaining foreign object retained within this section (ice), and that for clarity and brevity the table of § 33.77(e) is deleted, and the table's remaining pertinent information is included directly into the text of existing paragraph (e). No changes to the requirements have resulted from these additional format changes.

Section 25.1091 was revised to include reference to § 33.76. It was determine that the part 33 references within § 25.1091 needed to be updated to account for this rulemaking action.

After careful review of all the comments, the FAA has determined that air safety and the public interest require the adoption of the rule with the changes described.

Paperwork Reduction

There are no new requirements for information collection associated with this rule that would require approval from the Office of Management and Budget pursuant to the Paperwork Reduction Act of 1995 (44 U.S.C. 3507(d)).

International Compatibility

In keeping with U.S. obligations under the Convention on International Civil Aviation, it is FAA policy to comply with International Civil Aviation Organization (ICAO) Standards and Recommends Practices to the maximum extent practicable. The FAA determined that there are no ICAO Standards and Recommended Practices that correspond to these regulations.

Regulatory Analyses and Assessments

Changes to Federal regulations must undergo several economic analyses. First, Executive Order 12866 directs each Federal agency to propose or adopt a regulation only upon a reasoned determination that the benefits of the intended regulation justify its costs. Second, the Regulatory Flexibility Act of 1980 requires agencies to analyze the economic impact of regulatory changes on small entities. Third, the Trade Agreements Act (19 U.S.C. 2531–2533) prohibits agencies from setting standards that create unnecessary obstacles to the foreign commerce of the United States. In developing U.S. standards, this Trade Act also requires agencies to consider international standards and, where appropriate, use them as the basis of U.S. standards. And fourth, the Unfunded Mandates Reform Act of 1995 requires agencies to prepare a written assessment of the costs, benefits and other effects of proposed or final rules that include a Federal mandate likely to result in the expenditure by State, local or tribal governments, in the aggregate, or by the private sector, of $100 million or more annually (adjusted for inflation.)

In conducting these analyses, FAA has determined this rule (1) has benefits which do justify its costs, is not a ''significant regulatory action'' as defined in the Executive Order and is ''significant'' as defined in DOT's Regulatory Policies and Procedures; (2) will not have a significant impact on a substantial number of small entities; (3) reduces barriers to international trade; and (4) does not impose an unfunded mandate on state, local, or tribal governments, or on the private sector. These analyses, available in the docket, are summarized below.

Regulatory Evaluation Summary

Cost—this rule is the result of ARAC recommendations. Moreover, public comments were not received on the preliminary economic evaluation. Costs of the rule include one-time certification costs and recurrent fuel costs due to reduced fan efficiency. The FAA estimates that the rule will add $250,000 to $500,000 to each new engine model's certification costs, depending on engine inlet area. These certification costs will be incurred primarily in two areas. First, additional analysis required to verify the affects of a large bird impact on the front of the engine could necessitate a component test costing $250,000. Second, the rule

will require additional analysis or testing on the full fan assembly for engines with inlet areas greater than 2,092 square-inches. Such testing is estimated to cost approximately an additional $250,000 for those engines.

In addition, the revised bird test weights could necessitate strengthening fan components, thereby affecting fan performance. The FAA estimates that reduced fan efficiency will result in a 0.2-percent increase in fuel consumption. On average, the FAA estimates that this will increase annual fuel costs by $4,770 per airplane, for airplanes equipped with new engines certificated to the standards of this rule.

Benefits—Benefits associated with this rule include: (1) Averted fatalities and injuries, (2) averted property damage (primarily hull losses), and (3) reduced maintenance and repair costs. Based on historical accident information, the FAA estimates that the expected annual per-airplane benefit from averted airplane damage or loss is approximately $657. The expected annual benefit per-airplane from averted fatalities and injuries is $654 and $75, respectively.

The estimated value of maintenance/repair savings associated with the rule is based on an analysis of the relationship between bird ingestion weight and the probability of damage. The FAA estimates that, on average, the rule will save operators approximately $4,654 per airplane per year.

To compare the lifecycle costs and benefits of the rule, the evaluation utilizes a hypothetical representative engine certification. The engines are assumed to be installed on a notional twin-engine jet transport with a seating capacity of 161 (the average seating capacity of jet transports in commercial service in 1996). In addition, this analysis assumes the following: (1) Incremental engine certification costs equal $250,000 in year 0 and $250,000 in year 1; (2) production of engines commences in year 2, (3) engines are installed in aircraft and enter service beginning in year 3, (4) each engine has a 15-year service life, (5) 24 engines are produced per year for 10 years so that there are 240 total engines and 120 airplanes per certification, and (6) the discount rate is 7 percent. Under these conditions, the expected discounted benefits, at $4.333 million, exceed the discounted costs of $3.906 million.

Regulatory Flexibility Act

The Regulatory Flexibility Act (RFA) of 1980, 5 U.S.C. 601–612, directs the FAA to fit regulatory requirements to the scale of the business, organizations, and governmental jurisdictions subject to the regulation. We are required to determine whether a proposed or final action will have a ''significant economic impact on a substantial number of small entities'' as defined in the Act. If we find that the action will have a significant impact, we must do a ''regulatory flexibility analysis.''

This final rule will not have a significant economic impact on a substantial number of small entities. The final rule will apply only to newly designed turbine aircraft engines certificated in the future. Each new engine certification could affect two types of small entities: manufacturers of turbine engines and operators of aircraft.

Manufacturers will be required to perform additional analysis or testing to demonstrate that the new bird ingestion requirements are met. There are nine turbine aircraft engine manufacturers with headquarters in the U.S. (this count includes subsidiaries of foreign entities and consortiums of domestic and/or foreign entities). Information available to the FAA indicates that only one—a U.S. manufacturer of small turbine engines has less than 1,500 employees, and therefore qualifies as a small business under SBA employment criteria. One entity is not considered a substantial number by the FAA. If all certification costs are assumed to be borne by the manufacturer, the FAA would conclude that with only one manufacturing firm being classified as ''small,'' there is not an impact on small business.

In addition, the FAA analyzed the small business impact with a tougher criterion. The FAA assumes that all manufacturing costs will be borne by their customers who purchase new equipment. The rule is estimated to add about $250,000 for a small engine type produced by the single small entity: these are one-time certification costs. The FAA estimates that the rule will impose no incremental manufacturing costs. Aircraft operators will incur slightly higher engine prices and will pay increased operating or fuel costs due to the small decrease in engine efficiency (described in the full regulatory evaluation). According to FAA data, there are about 3,000 air carriers having less than 1,500 employees: approximately 100 air carriers operating under part 121 (or both part 121 and part 135), and 2,900 air carriers operating under part 135.

Assuming conservatively that: (1) All incremental certification costs are passed on to the buyer/operator, (2) the manufacturer recovers incremental certification costs by applying a uniform price increase to engines produced during a 10-year production run, and (3) that the discount rate is 7 percent; then the FAA estimates that average new engine prices will increase by approximately $3,070 per larger engine and $1,587 per smaller engine. When these costs are amortized over the 15-year life of an engine (again, assuming a 7-percent discount rate), the incremental annualized cost per new engine is approximately $315 and $163 for larger and smaller engines, respectively. Therefore, assuming a typical airplane has two engines, the incremental annualized costs for a large airplane is approximately $630 and the incremental annualized cost for a smaller airplane is approximately $326.

For larger engines, the rule will also increase annual airplane operating costs as a result of the new medium bird ingestion requirements due to higher fuel consumption and, thus, costs. These requirements will have a negligible effect on smaller engines. On average, annual operating costs per large airplane, with engines newly certificated to the standards of this rule, are estimated to increase by approximately $4,770. However, the reduction in average annualized maintenance costs associated with the more damage-resistant engines is expected to approximately offset the incremental operating costs.

Therefore, total annualized costs for operators of larger and smaller airplanes with new engines will be approximately $630 and $326 per airplane, respectively. Consequently, the FAA certifies that the rule will not have a significant economic impact on a substantial number of small entities.

International Trade

The Trade Agreement Act of 1979 prohibits Federal agencies from engaging in any standards of related activity that create unnecessary obstacles to the foreign commerce of the United States. Legitimate domestic objectives, such as safety, are not considered unnecessary obstacles. The statute also requires consideration of international standards and where appropriate, that they be the basis for U.S. standards. In addition, consistent with the Administration's belief in the general superiority and desirability of free trade, it is the policy of the Administration to remove or diminish, to the extent feasible, barriers to international trade, including both barriers affecting the export of American goods and services to foreign countries and barriers affecting the import of foreign goods and services into the U.S.

Turbine engines are produced by United States and foreign companies. The FAA has assessed the potential

effect of this rule and has determined that it will impose the same costs on domestic and international entities, and will thus have a neutral trade impact.

Unfunded Mandates Reform Act

The Unfunded Mandates Reform Act of 1995 (2 U.S.C. 1532–1538) requires the FAA to assess the effects of Federal regulatory actions on state, local, and tribal governments, and on the private sector of rules that contain a Federal intergovernmental or private sector mandate that exceeds $100 million in nay one year. This action does not contain such a mandate.

Executive Order 13132, Federalism

The FAA has analyzed this final rule under the principles and criteria of Executive Order 13132, Federalism. The FAA determined that this action will not have a substantial direct effect on the States, or the relationship between the national Government and the States, or on the distribution of power and responsibilities among the various levels of government. Therefore, the FAA has determined that his final rule does not have federalism implications.

Plain Language

In response to the June 1, 1998, Presidential Memorandum regarding the use of plain language, the FAA re-examined the writing style currently used in the development of regulations. The memorandum requires federal agencies to communicate clearly with the public. We are interested in your comments on whether the style of this document is clear, and any other suggestions you might have to improve the clarity of FAA communications that affect you. You can get more information about the Presidential memorandum and the plain language initiative at *http://www.plainlanguage.gov.*

Environmental Analysis

FAA Order 1050.1D defines FAA actions that may be categorically excluded from preparation of a National Environmental Policy Act (NEPA) environmental assessment or environmental impact statement. In accordance with FAA Order 1050.ID, appendix 4, paragraph 4(j), this rulemaking action qualifies for a categorical exclusion.

Energy Impact

The energy impact of the notice has been assessed in accordance with the Energy Policy and Conservation Act (EPCA) Public Law 94–163, as amended (43 U.S.C. 6362) and FAA Order 1053.1. It has been determined that the final rule is not a major regulatory action under the provisions of the EPCA.

List of Subjects

14 CFR Part 23

Air transportation, Aircraft, Aviation safety, Safety.

14 CFR Part 25

Air transportation, Aircraft, Aviation safety, Safety.

14 CFR Part 33

Air transportation, Aircraft, Aviation safety, Safety.

The Amendment

In consideration of the foregoing, the Federal Aviation Administration amends parts 23, 25 and 33 of Title 14, Code of Federal Regulations as follows:

PART 23—AIRWORTHINESS STANDARDS: NORMAL, UTILITY, ACROBATIC, AND COMMUTER CATEGORY AIRPLANES

1. The authority citation for part 23 continues to read as follows:

Authority: 49 U.S.C. 106(g), 40113, 44701, 44702, 44704.

2. Section 23.903 is amended by revising paragraph (a)(2) to read as follows:

§ 23.903 Engines.

(a) * * *

(2) Each turbine engine and its installation must comply with one of the following:

(i) Sections 33.76, 33.77 and 33.78 of this chapter in effect on December 13, 2000.

(ii) Sections 33.77 and 33.78 of this chapter in effect on April 30, 1998, or as subsequently amended before December 13, 2000; or

(iii) Section 33.77 of this chapter in effect on October 31, 1974, or as subsequently amended before April 30, 1998, unless that engine's foreign object ingestion service history has resulted in an unsafe condition; or

(iv) Be shown to have a foreign object ingestion service history in similar installation locations which has not resulted in any unsafe condition.

* * * * *

PART 25—AIRWORTHINESS STANDARDS: TRANSPORT CATEGORY AIRPLANES

3. The authority citation for part 25 continues to read as follows:

Authority: 49 U.S.C. 106(g), 40113, 44701, 44702, 44704.

4. Section 25.903 is amended by revising paragraph (a)(2) to read as follows:

§ 25.903 Engines.

(a) * * *

(2) Each turbine engine must comply with one of the following:

(i) Sections 33.76, 33.77 and 33.78 of this chapter in effect on December 13, 2000, or as subsequently amended; or

(ii) Sections 33.77 and 33.78 of this chapter in effect on April 30, 1998, or as subsequently amended before December 13, 2000; or

(iii) Comply with § 33.77 of this chapter in effect on October 31, 1974, or as subsequently amended prior to April 30, 1998, unless that engine's foreign object ingestion service history has resulted in an unsafe condition; or

(iv) Be shown to have a foreign object ingestion service history in similar installation locations which has not resulted in any unsafe condition.

* * * * *

5. Section 25.1091 is amended by revising paragraph (e) to read as follows:

§ 25.1091 Air induction.

* * * * *

(e) If the engine induction system contains parts or components that could be damaged by foreign objects entering the air inlet, it must be shown by tests or, if appropriate, by analysis that the induction system design can withstand the foreign object ingestion test conditions of §§ 33.76, 33.77 and 33.78(a)(1) of this chapter without failure of parts or components that could create a hazard.

PART 33—AIRWORTHINESS STANDARDS: AIRCRAFT ENGINES

6. The authority citation for part 33 continues to read as follows:

Authority: 49 U.S.C. 106(g), 40113, 44701, 44702, 44704.

7. Section 33.76 is added to read as follows:

§ 33.76 Bird ingestion.

(a) *General.* Compliance with paragraphs (b) and (c) of this section shall be in accordance with the following:

(1) All ingestion tests shall be conducted with the engine stabilized at no less than 100-percent takeoff power or thrust, for test day ambient conditions prior to the ingestion. In addition, the demonstration of compliance must account for engine operation at sea level takeoff conditions on the hottest day that a minimum engine can achieve maximum rated takeoff thrust or power.

(2) The engine inlet throat area as used in this section to determine the bird quantity and weights will be established by the applicant and identified as a limitation in the installation instructions required under § 33.5.

(3) The impact to the front of the engine from the single large bird and the single largest medium bird which can enter the inlet must be evaluated. It must be shown that the associated components when struck under the conditions prescribed in paragraphs (b) or (c) of this section, as applicable, will not affect the engine to the extent that it cannot comply with the requirements of paragraphs (b)(3) and (c)(6) of this section.

(4) For an engine that incorporates an inlet protection device, compliance with this section shall be established with the device functioning. The engine approval will be endorsed to show that compliance with the requirements has been established with the device functioning.

(5) Objects that are accepted by the Administrator may be substituted for birds when conducting the bird ingestion tests required by paragraphs (b) and (c) of this section.

(6) If compliance with the requirements of this section is not established, the engine type certification documentation will show that the engine shall be limited to aircraft installations in which it is shown that a bird cannot strike the engine, or be ingested into the engine, or adversely restrict airflow into the engine.

(b) *Large birds.* Compliance with the large bird ingestion requirements shall be in accordance with the following:

(1) The large bird ingestion test shall be conducted using one bird of a weight determined from Table 1 aimed at the most critical exposed location on the first stage rotor blades and ingested at a bird speed of 200-knots for engines to be installed on airplanes, or the maximum airspeed for normal rotocraft flight operations for engines to be installed on rotocraft.

(2) Power lever movement is not permitted within 15 seconds following ingestion of the large bird.

(3) Ingestion of a single large bird tested under the conditions prescribed in this section may not cause the engine to:

(i) Catch fire;

(ii) Release hazardous fragments through the engine casing;

(iii) Generate loads greater than those ultimate loads specified under § 33.23(a); or

(iv) Lose the ability to be shut down.

(4) Compliance with the large bird ingestion requirements of this paragraph may be shown by demonstrating that the requirements of § 33.94(a) constitute a more severe demonstration of blade containment and rotor unbalance than the requirements of this paragraph.

TABLE 1 TO § 33.76.—LARGE BIRD WEIGHT REQUIREMENTS

Engine Inlet Throat Area (A)—Square/meters (square-inches)	Bird weight kg. (lb.)
1.35 (2,092)> A	1.85 (4.07) minimum, unless a smaller bird is determined to be a more severe demonstration.
1.35 (2,029)≤ A< 3.90 (6,045).	2.75 (6.05)
3.90 (6,045)≤ A	3.65 (8.03)

(c) *Small and medium birds.* Compliance with the small and medium bird ingestion requirements shall be in accordance with the following:

(1) Analysis or component test, or both, acceptable to the Administrator, shall be conducted to determine the critical ingestion parameters affecting power loss and damage. Critical ingestion parameters shall include, but are not limited to, the affects of bird speed, critical target location, and first stage roto speed. The critical bird ingestion speed should reflect the most critical condition within the range of airspeeds used for normal flight operations up to 1,500 feet above ground level, but not less than V_1 minimum for airplanes.

(2) Medium bird engine tests shall be conducted so as to simulate a flock encounter, and will use the bird weights and quantities specified in Table 2. When only one bird is specified, that bird will be aimed at the engine core primary flow path; the other critical locations on the engine face area must be addressed, as necessary, by appropriate tests or analysis, or both. When two or more birds are specified in Table 2, the largest of those birds must be aimed at the engine core primary flow path, and a second bird must be aimed at the most critical exposed location on the first stage rotor blades. Any remaining birds must be evenly distributed over the engine face area.

(3) In addition, except for rotorcraft engines, it must also be substantiated by appropriate tests or analysis or both, that when the full fan assembly is subjected to the ingestion of the quantity and weights of bird from Table 3, aimed at the fan assembly's most critical location outboard of the primary core flowpath, and in accordance with the applicable test conditions of this paragraph, that the engine can comply with the acceptance criteria of this paragraph.

(4) A small bird ingestion test is not required if the prescribed number of medium birds pass into the engine rotor blades during the medium bird test.

(5) Small bird ingestion tests shall be conducted so as to simulate a flock encounter using one 85 gram (0.187 lb.) bird for each 0.032 square-meter (49.6 square-inches) of inlet area, or fraction thereof, up to a maximum of 16 birds. The birds will be aimed so as to account for any critical exposed locations on the first stage rotor blades, with any remaining birds evenly distributed over the engine face area.

(6) Ingestion of small and medium birds tested under the conditions prescribed in this paragraph may not cause any of the following:

(i) More than a sustained 25-percent power or thrust loss;

(ii) The engine to be shut down during the required run-on demonstration prescribed in paragraphs (c)(7) or (c)(8) of this section;

(iii) The conditions defined in paragraph (b)(3) of this section.

(iv) Unacceptable deterioration of engine handling characteristics.

(7) Except for rotorcraft engines, the following test schedule shall be used:

(i) Ingestion so as to simulate a flock encounter, with approximately 1 second elapsed time from the moment of the first bird ingestion to the last.

(ii) Followed by 2 minutes without power level movement after the ingestion.

(iii) Followed by 3 minutes at 175-percent of the test condition.

(iv) Followed by 6 minutes at 60-percent of the test condition.

(v) Followed by 6 minutes at 40-percent of the test condition.

(vi) Followed by 1 minute at approach idle.

(vii) Followed by 2 minutes at 75-percent of the test condition.

(viii) Followed by stabilizing at idle and engine shut down.

The durations specified are times at the defined conditions with the power lever being moved between each condition in less than 10 seconds.

(8) For rotorcraft engines, the following test schedule shall be used:

(i) Ingestion so as to simulate a flock encounter within approximately 1 second elapsed time between the first ingestion and the last.

(ii) Followed by 3 minutes at 75-percent of the test condition.

(iii) Followed by 90 seconds at descent flight idle.

(iv) Followed by 30 seconds at 75-percent of the test condition.

(v) Followed by stabilizing at idle and engine shut down. The duration specified are times at the defined conditions with the power being changed between each condition in less than 10 seconds.

(9) Engines intended for use in multi-engine rotorcraft are not required to comply with the medium bird ingestion portion of this section, providing that the appropriate type certificate documentation is so endorsed.

(10) If any engine operating limit(s) is exceeded during the initial 2 minutes without power lever movement, as provided by paragraph (c)(7)(ii) of this section, then it shall be established that the limit exceedence will not result in an unsafe condition.

TABLE 2 TO § 33.76.—MEDIUM FLOCKING BIRD WEIGHT AND QUANTITY REQUIREMENTS

Engine Inlet Throat Area (A)—Square-meters (square-inches)	Bird quantity	Bird weight kg. (lb.)
0.05 (77.5)> A	none	
.05 (77.5)≤ A <0.10 (155)	1	0.35 (0.77)
0.10 (155)≤ A <0.20 (310)	1	0.45 (0.99)
0.20 (310)≤ A <0.40 (620)	2	0.45 (0.99)
0.40 (620)≤ A <0.60 (930)	2	0.70 (1.54)
0.60 (930)≤ A <1.00 (1,550)	3	0.70 (1.54)
1.00 (1,550)≤ A <1.35 (2,092)	4	0.70 (1.54)
1.35 (2,092)≤ A <1.70 (2,635)	1	1.15 (2.53)
	plus 3	0.70 (1.54)
1.70 (2,635)≤ A <2.10 (3,255)	1	1.15 (2,53)
	plus 4	0.70 (1.54)
2.10 (3,255)≤ A <2.50 (3,875)	1	1.15 (2.53)
	plus 5	0.70 (1.54)
2.50 (3,875)≤ A <3.90 (6045)	1	1.15 (2.53)
	plus 6	0.70 (1.54)
3.90 (6045)≤ A <4.50 (6975)	3	1.15 (2.53)
4.50 (6975)≤ A	4	1.15 (2.53)

TABLE 3 TO § 33.76.—ADDITIONAL INTEGRITY ASSESSMENT

Engine Inlet Throat Area (A)—square-meters (square-inches)	Bird quantity	Bird weight kg. (lb.)
1.35 (2,092)> A	none	
1.35 (2,092)≤ A <2.90 (4,495)	1	1.15 (2.53)
2.90 (4,495)≤ A <3.90 (6,045)	2	1.15 (2.53)
3.90 (6,045)≤ A	1	1.15 (2.53)
	plus 6	0.70 (1.54)

8. Section 33.77 is amended by revising the section heading, removing and reserving paragraphs (a) and (b), and by revising paragraphs (c), (d)(3), and (e) to read as follows:

§ 33.77 Foreign object ingestion—ice.

(a) [Reserved]

(b) [Reserved]

(c) Ingestion of ice under the conditions of paragraph (e) of this section may not—

(1) Cause a sustained power or thrust loss; or

(2) require the engine to be shutdown.

(d) * * *

(3) The foreign object, or objects, stopped by the protective device will not obstruct the flow of induction air into the engine with a resultant sustained reduction in power or thrust greater than those values required by paragraph (c) of this section.

(e) Compliance with paragraph (c) of this section must be shown by engine test under the following ingestion conditions:

(1) Ice quantity will be the maximum accumulation on a typical inlet cowl and engine face resulting from a 2-minute delay in actuating the anti-icing system; or a slab of ice which is comparable in weight or thickness for that size engine.

(2) The ingestion velocity will simulate ice being sucked into the engine inlet.

(3) Engine operation will be maximum cruise power or thrust.

(4) The ingestion will simulate a continuous maximum icing encounter at 25 degrees Fahrenheit.

Issued in Washington, DC, on September 5, 2000.

Jane F. Garvey,

Administrator.

[FR Doc. 00–23175 Filed 9–13–00; 8:45 am]

BILLING CODE 4910–13–M

Federal Register

Thursday,
September 14, 2000

Part VI

Department of Labor

Pension and Welfare Benefits Administration

Disclosure Obligations Under ERISA; Request for Information; Notice

DEPARTMENT OF LABOR

Pension and Welfare Benefits Administration

Disclosure Obligations Under ERISA; Request for Information

AGENCY: Pension and Welfare Benefits Administration, Labor.

ACTION: Notice of request for information.

SUMMARY: This document requests information from the public concerning disclosure obligations of fiduciaries of employee benefit plans governed by ERISA. A principal component of ERISA's regulatory scheme is its specific disclosure rules, which generally impose two types of obligations on plan administrators: (1) Obligations to disclose certain information to plan participants and beneficiaries automatically; and (2) obligations to disclose certain information upon a participant's or beneficiary's request. The Department of Labor solicits comments in this document regarding the effect on employee benefit plans and employers of recent rulings of the United States Supreme Court and federal circuit courts regarding the extent of an ERISA fiduciary's duty to disclose information to participants and beneficiaries in addition to the specific disclosure requirements imposed under ERISA. The Department of Labor has in the past expressed its views on this matter by filing amicus briefs in related court cases. It intends to use the information submitted in response to this document as a basis for determining whether it would be appropriate for the Department to take more general action on these issues, such as by proposing regulations or legislative amendments.

DATES: Written comments are requested to be submitted to the Department of Labor on or before January 12, 2001.

ADDRESSES: Comments (preferably, at least six copies) should be addressed to the Office of Regulations and Interpretations, Pension and Welfare Benefits Administration, Room N–5669, U.S. Department of Labor, Washington, D.C. 20210. Attention: Disclosure RFI. All comments received will be available for public inspection at the Public Disclosure Room, Pension and Welfare Benefits Administration, U.S. Department of Labor, Room N–5638, 200 Constitution Avenue, NW, Washington, D.C. 20210.

FOR FURTHER INFORMATION CONTACT: Ellen Goodwin or Susan Lahne, Office of Regulations and Interpretations, Pension and Welfare Benefits Administration, Room N–5669, U.S. Department of Labor, Washington, D.C. 20210, telephone (202) 219–7461, or Patricia Arzuaga, Plan Benefits Security Division, Office of the Solicitor, U.S. Department of Labor, Washington, D.C. 20210, telephone (202) 219–4600, x153. These are not toll free numbers.

SUPPLEMENTARY INFORMATION:

A. Background

The Department of Labor (Department) seeks information from the public concerning the disclosure obligations of fiduciaries of employee benefit plans governed by the Employee Retirement Income Security Act of 1974 (ERISA). ERISA contains specific disclosure rules, contained in Part 1 of Title I, that require disclosure of certain information to participants and beneficiaries. Part 1 generally imposes two categories of obligations on plan administrators: (1) Obligations to disclose certain information automatically; and (2) obligations to disclose certain information upon a participant's or beneficiary's request. The provisions contained in Part 1 of Title I describe the content and timing of both types of mandated disclosures. ERISA further imposes certain general duties, contained in Part 4 of Title I, on plan ''fiduciaries'' with respect to how they conduct their affairs.[1]

Certain recent rulings by the United States Supreme Court and several federal circuit courts have expressed views under a variety of circumstances on the extent to which the fiduciary duties in Part 4 of ERISA create disclosure obligations beyond those set forth in Part 1. The law in this area is still evolving. The Department is concerned that these rulings, coupled with recent changes in the laws governing the substantive requirements for employee benefit plans,[2] may have created uncertainty as to how plan fiduciaries may best conduct their affairs so as to satisfy their fiduciary and disclosure obligations under ERISA. Moreover, changes in work patterns of participants and beneficiaries, new forms of pension and health plan design, and changes to the provisions of ERISA and the private pension and welfare benefit system have resulted in questions about the application of fiduciary and disclosure provisions to differing circumstances. Although the Department has provided guidance to interpret and enforce the disclosure provisions in Part 1 of Title I and the fiduciary provisions in Part 4 of Title I through regulatory and other actions, the Department believes that these recent developments may suggest a possible need for further general guidance regarding the interplay of these provisions.

The Department now seeks public assistance in determining whether it would be in the interest of plans, and their participants and beneficiaries, for the Department to undertake action to clarify the extent of fiduciary duties under ERISA regarding disclosure and the interaction of this fiduciary duty with the specific disclosure requirements under Part 1 of Title I. The Department intends to consider a variety of possible actions, including (but not limited to) promulgation of formal regulatory guidance, more targeted intervention in litigation, enforcement actions, or legislative reform proposals.

1. Statutory Duties

With respect to automatic disclosures of information, ERISA specifically identifies particular documents and information that must automatically be provided to participants and beneficiaries independent of any request, for example, the Summary Plan Description (SPD)[3] and summary annual reports.[4] There are additional required disclosures that arise under particular circumstances (*e.g.,* material modifications in plan terms)[5] or as a result of the type of plan involved (group health plan versus other welfare benefit plans, self-funded plans versus insured).[6]

[1] A ''fiduciary'' is ''someone acting in the capacity of a manager, administrator, or financial advisor to a 'plan'.'' *Pegram* v. *Herdrich,* _ U.S. _, 120 S. Ct. 2143, 2151 (2000). *See* ERISA § 3(21); 29 U.S.C. 1003(21).

[2] For example, most states have instituted comprehensive benefit mandates for health plans. In addition, federal law now includes benefit mandates regarding portability of health coverage and nondiscrimination in benefits (Health Insurance Portability and Accountability Act of 1996), coverage for maternity hospital stays (Newborns' and Mothers' Health Protection Act of 1996), mental health (Mental Health Parity Act of 1996), and reconstructive surgery following mastectomy (Women's Health and Cancer Rights Act of 1998).

[3] ERISA section 104(b)(1); 29 U.S.C. 1024(b)(1) (SPD to be furnished to participant and beneficiary receiving benefits under the plan within 90 days of becoming participant or beneficiary).

[4] ERISA section 104(b)(3); 29 U.S.C. 1024(b)(3) (summary annual report to be furnished to participants and beneficiaries within 210 days after close of fiscal year of the plan).

[5] ERISA section 104(b)(1); 29 U.S.C. 1024(b)(1) (summary of material modification (SMM) to be furnished within 210 days after end of plan year during which modification was adopted).

[6] ERISA section 101(d); 29 U.S.C. 1021(d) (single employer plan required to notify participants and beneficiaries of failure to meet minimum funding standards); ERISA section 104(b)(1); 29 U.S.C. 1024(b)(1) (group health plan required to furnish summary to participants and beneficiaries of material reduction is covered benefits not later than 60 days after adoption of the change); ERISA

ERISA separately prescribes categories of documents that must be provided upon a participant's request, such as an annual individual statement of accrued benefits,[7] or the latest version of the plan's SPD, annual report, or any terminal report.[8] The statute also requires plans to provide to participants and beneficiaries, on written request, copies of any ''trust agreement, contract, or other instruments under which the plan is established or operated.'' [9]

2. Fiduciary Obligations

The general fiduciary duties set forth in Part 4 of Title I are simply summarized. Fiduciaries owe a duty of loyalty to plan participants and beneficiaries to act solely in their interest and for the exclusive purpose of providing benefits to them and defraying the reasonable expenses of administering the plan. ERISA section 404(a); *see Pegram*, 120 S. Ct. at 2151. A fiduciary must carry out his or her duties with the care, skill, prudence, and diligence under the prevailing circumstances that a prudent person with like knowledge and like capacity would use to conduct an enterprise of a like character with like aims; must diversify plan assets; and must operate the plan in accordance with its governing documents. *Id.* However, section 404 does not specifically articulate a duty regarding disclosure of information to participants and beneficiaries.

Recent court decisions have found that plan fiduciaries have a duty to disclose information not expressly required to be disclosed under Part 1 of Title I. These cases have involved the fiduciary duty to act solely in the interest of plan participants and beneficiaries and the issue of the extent to which this fiduciary duty encompasses a collateral duty to provide participants and beneficiaries with information they need to exercise their rights effectively under the plan, to protect their rights under ERISA, or otherwise to make informed decisions about their future. These decisions have differed with respect to their approach, and the law appears to be evolving. As a result of the differing judicial rulings, the rules applicable to fiduciaries regarding these obligations at present appear to vary according to the federal judicial circuit that has jurisdiction over the case.

In *Varity Corp.* v. *Howe*,[10] the Supreme Court opined that when a fiduciary speaks to participants and beneficiaries, the fiduciary standards of section 404 impose a duty upon the plan fiduciary to speak truthfully. Thus, a fiduciary may not lie to, or affirmatively mislead, a participant or beneficiary about plan terms or important aspects of a plan's status, such as whether the plan will soon be terminated. In reaching its decision, the Court expressly reserved the broader question of ''whether ERISA fiduciaries have any fiduciary duty to disclose truthful information on their own initiative, or in response to employee inquiries.[11] The Court's recent decision in *Pegram*, 120 S. Ct. at 2154 n.8, which addressed fiduciary issues arising out of medical decisionmaking under a group health plan, stated in dicta that ''it could be argued that * * * [a fiduciary] is obligated to disclose characteristics of the plan and of those who provide services to the plan, if that information affects beneficiaries' material interests.'' Although not part of the holding of the Court in *Pegram*, this dicta could be read to support the conclusion that, in certain circumstances, a fiduciary has an affirmative duty of disclosure. In *Pegram*, the plaintiff had challenged an HMO's system for awarding financial incentives to its physicians, which she claimed impermissibly encouraged HMO physicians to deny needed care in return for increased monetary rewards.[12]

Following the decision in *Varity*, lower federal courts have been confronted with a variety of issues regarding the scope of a fiduciary's duty to disclose, when such disclosure would not be expressly required under Part 1. The resulting decisions have created a patchwork of rules across jurisdictions. Certain circuit courts have held that providing misleading information to plan participants who inquire about, for example, their benefits under a plan or the extent of benefits generally under a plan may constitute a breach of fiduciary duty.[13] Other circuit courts have gone farther to impose an affirmative duty on fiduciaries to provide complete and correct information, regardless of whether a participant or beneficiary has specifically inquired.[14] Another circuit court has imposed upon plan fiduciaries a continuing ''duty to correct'' statements in an SPD that have become materially misleading to plan participants due to events subsequent to the distribution of the SPD.[15] Courts have recognized that circumstances that may necessitate plan changes, such as employer business reorganizations or bad financial times, may create a conflict of interest between plan fiduciaries and participants over what information should be disclosed. In defining the boundaries of required disclosures, courts have attempted to balance the conflicting needs of employers and participants in the area of increased benefits under so-called ''window plans'' by articulating tests requiring disclosure only when a company has become engaged in ''serious consideration'' of a plan change.[16] At the other end of the

section 103(e); 29 U.S.C. 1023(e) (plans offering coverage through an insurance policy required to disclose in annual report certain information regarding premium payments).

[7] ERISA § 105; 29 U.S.C. 1025.

[8] ERISA § 104(b)(4); 9 U.S.C. 1024(b)(4).

[9] *Id. Compare Teen Help Inc.* v. *Operating Engineers Health and Welfare Trust Fund*, No. C 98–2084, slip op. at 8 (N.D. Cal. Aug. 24, 1999) (utilization review criteria used to decide a claim for benefits are ''other instruments'' and must be disclosed upon request under section 104(b)(4)), *with Doe* v. *Travelers Ins. Co.*, 167 F.3d 53, 60 (1st Cir. 1999) (''mental health guidelines'' used to decide a claim were not ''other instruments'' and therefore not required to be disclosed upon request under § 104(b)(4)). In Advisory Opinion 96–14A (July 31, 1996), the Department expressed its view that ''any document or instrument that specifies procedures, formulas, methodologies, or schedules to be applied in determining or calculating a participant's or beneficiary's benefit entitlement * * * would constitute an instrument under which a plan is established or operated'' for purposes of section 104(b)(2) and (b)(4), regardless of whether such information is contained in a document designated as the ''plan document.''

[10] 516 U.S. 489 (1996).

[11] *Id.* at 506.

[12] *Cf. Shea* v. *Esensten*, 107 F.3d 625 (8th Cir.) (holding that a plan administrator has a fiduciary duty to disclose all material facts affecting a plan participant's health care interests, including financial incentives that might discourage a treating physician from providing essential referrals for covered conditions), *cert. denied*, 522 U.S. 914 (1997). *But see Ehlmann* v. *Kaiser Foundation Health Plan of Texas*, 198 F.3d 552 (5th Cir.) (holding that ERISA does not impose a duty on fiduciaries to disclose physician compensation arrangements in absence of inquiry or special circumstances), *cert. dismissed*, ____ U.S. ____, 2000 WL 1146498 (Aug. 15, 2000).

[13] *Krohn* v. *Huron Memorial Hosp.*, 173 F.3d 542, 551 (6th Cir. 1999) (faced with a participant injury, fiduciary had a duty under ERISA to convey to the participant complete and correct material information as to his eligibility for benefits and options under the plan); *Eddy* v. *Colonial Life Ins. Co.*, 919 F.2d 747, 750 (D.C. Cir. 1990 (same).

[14] *Farr* v. *U.S. West*, 151 F.3d 908, 913 (9th Cir. 1998), *cert. denied* ____ U.S. __, 120 S. Ct. 935 (2000) (finding that ''fiduciary has an obligation to convey complete and accurate information material to the beneficiary's circumstance, even when a beneficiary has not specifically asked for the information'' where SPD provided incomplete information on tax treatment of lump sum distributions); *Jordan* v. *Federal Express Corp.*, 116 F.3d 1005, 1016 (3rd Cir. 1997) (finding that participant's failure to inquire did not preclude suit for breach of fiduciary duty for failure to disclose material facts regarding irrevocability of retirement elections).

[15] *McAuley* v. *IBM Corp., Inc.*, 165 F.3d 1038, 1046 (6th Cir.), *cert. dismissed*, ____ U.S. ____, 120 S. Ct. 38 (1999).

[16] *Bins* v. *Exxon, U.S.A.*, 189 F.3d 929, 935–37 (1999) (discussing different standards for ''serious consideration'' adopted by various federal circuits), *rev'd en banc*, No. 98–55662, 2000 WL 1126387 (9th

Continued

spectrum, other circuit courts have been reluctant to create new duties to disclose information to participants, regardless of the asserted value of the information to participants, beyond what is specifically required by Part 1 of Title I, ERISA's reporting and disclosure provisions.[17]

3. Issues To Be Addressed

Because the federal courts' decisions have differed in their treatment of many issues concerning the fiduciary duty to make disclosures to participants and beneficiaries, the Department wishes to determine whether it would be advisable to issue general guidance in this area to encourage uniform protections to participants and beneficiaries across the nation.[18] Therefore, the Department solicits comments to assist it in developing a basis on which to determine what actions, if any, would be in the public interest. The following specific questions are intended to highlight the areas of the Department's concern, but are not intended to limit the scope of comments. Please refer to the specific relevant question by number in responding to the enumerated questions. The Department solicits comment from interested parties on the following questions:

1. To what extent do the current reporting and disclosure requirements of Part 1 of Title I fail to meet the needs of participants and beneficiaries with respect to understanding their benefits, their rights under ERISA, and the consequences of choices offered to them under their plans?

2. To what extent do the current administrative practices of plans fail to meet any of the following standards, each of which has been articulated by one or more courts as part of a fiduciary's duty under Part 4 of Title I:

a. Plan administrators should provide complete and accurate information when responding to requests for automatic disclosures (courts have treated material omissions as affirmative misrepresentations);

b. Plan administrators should correct misleading statements contained in documents provided upon request when it is clear that the statements which were once accurate and informative have now become misleading;

c. Plan administrators should provide complete and accurate information relevant to the participant or beneficiary's specific circumstances when the participant or beneficiary requests information about his or her benefits;

d. Plan administrators should provide complete and accurate information relevant to the participant or beneficiary's specific circumstances when the participant or beneficiary inquires about future plan changes;

e. Plan administrators should disclose characteristics of the plan and of those who provide services to the plan, if that information affects beneficiaries' material interests.

3. What practical factors should the Department consider in developing a general policy or interpretive approach to provide guidance concerning what disclosures are required of plan fiduciaries, beyond those required by Part 1 of Title I, and the relationship between a fiduciary's duties under Part 4 and Part 1?

4. To what extent would changes have to be made to plan administration in order for plans to meet any or each of the standards set out in question 2, above?

5. Should any guidance issued by the Department on fiduciary disclosure obligations take into consideration State regulatory requirements, or other federal regulatory requirements (*e.g.,* securities laws, consumer protection laws, etc.)? If so, which requirements?

Data

6. What costs and benefits for plan sponsors and participants would be associated with modifying plan administrative practices regarding disclosure to meet each of the possible standards described in question 2, above?

7. To what extent do the costs and benefits associated with modifying administrative practices to meet the possible standards described in question 2, above, differ among plans that are fully insured, administered by third parties, or self-administered?

8. Are the costs and benefits for plan sponsors and participants of modifying administrative practices to meet the possible standards described in question 2, above, different for small plans (those with fewer than 100 participants)?

9. To what degree is the timing of disclosures about plan modifications related to the timing of routine communications with employees, such as furnishing employee newsletters, open-season informational packets, or individual account statements?

10. What costs and benefits might arise for plan sponsors and participants from additional guidance on fiduciary disclosure obligations, and how might these costs and benefits differ for small plans?

Hypothetical Fact Patterns

11. A plan sponsor modifies the benefits provided under a plan to comply with recently enacted federal benefit requirements. How and when do plan fiduciaries currently inform participants of these changes?

12. A plan subject to new federal benefit requirements has not yet been brought into compliance with the new federal requirements. The plan materials (such as the SPD) also have not yet been updated to reflect the changes, nor has the plan issued any notices advising plan participants of the changes in the law. The plan administrator is aware that the law affecting the plan has changed and that the plan is not yet in compliance. A participant, unaware of the new law, calls to ask whether the plan provides benefits that are mandated under the new requirements. What do plan administrators do in these circumstances?

13. A participant has requested information about the value of the retirement benefit that he will have earned upon attaining a certain age. The plan administrator is aware that the retirement benefit would have a much greater value as an annuity versus a lump sum amount. The plan administrator is aware that the

Cir. Aug. 10, 2000) (holding that in response to participant inquiries a fiduciary must disclose information about any plan changes then under serious consideration. Absent such inquiry, fiduciaries have no obligation to volunteer information about plan changes prior to final adoption.); *Vartanian* v. *Monsanto Co.*, 131 F.3d 264, 272 (1st Cir. 1997) (employer had no fiduciary duty to disclose retirement incentive program because it was not yet under serious consideration at the time of participant's inquiry); *Fischer* v. *Philadelphia Elec. Co.*, 96 F.3d 1533, 1539 (3rd Cir. 1996) (the ''serious consideration'' test ''recognizes and moderates the tension between an employee's right to information and the employer's need to operate on a day-to-day basis;'' serious consideration found when ''(1) a specific proposal (2) is being discussed for purposes of implementation (3) by senior management with the authority to implement the change''), *cert. denied*, 520 U.S. 1116 (1997).

[17] *Ehlmann*, 198 F.3d at 555; *CWA/ITU Negotiated Pension Plan* v. *Weinstein*, 107 F.3d 139 (2nd Cir. 1997) (no right to disclosure of pension plan's actuarial valuation reports); *Faircloth* v. *Lundy Packing Co.*, 91 F.3d 648 (4th Cir. 1996) (no right to disclosure of IRS determination letter on plan's qualification status, bonding policy insuring ESOP against fiduciary misconduct, appraisal reports, or valuation reports of employer's stock and documents concerning employer's financial status and operations; funding and investment policy for plan treated differently as ''instrument under which the plan is established or operated''), *cert. denied*, 519 U.S. 1077 (1997); *Barnes* v. *Lacey*, 927 F.2d 539 (11th Cir.) (no right to disclosure, in connection with company's offering early retirement window plan, of possibility that company might later offer second, enhanced window plan), *cert. denied* 502 U.S. 938 (1991).

[18] The Department has expressed its views in specific circumstances, including submitting amicus briefs in *Varity* v. *Howe* and *Shea* v. *Esensten*.

retirement benefit would have a much greater value at a date earlier than the normal retirement age due to early retirement benefits. What information do plan administrators currently provide to participants under these circumstances?

14. Employer A sells its business to Employer B and cancels its group health insurance, which had been provided through Issuer C. Employer B's group health plan will not absorb all of the former employees of Employer A. Employer A's plan offers conversion rights to the individual market, but neither Employer A's plan materials nor Issuer C's materials disclose this conversion right. Employee D, formerly a participant in Employer A's now-defunct plan, needs continuous, expensive treatment for a serious health condition which was covered by Employer A's plan and calls Issuer C to ask about conversion rights. What information do plan fiduciaries acting in capacities similar to Issuer C currently provide to an employee like Employee D?

15. An employer is considering selling part of its business or instituting retirement incentives to reduce its labor costs. How, when, and to whom do fiduciaries currently disclose an employer's deliberations regarding retirement incentives?

16. An employer is considering instituting a change to its defined benefit pension plan that would significantly change the value of the benefit, or reduce the value of the benefit upon attaining a certain age. How, when and to whom should the fiduciary of the employer's pension plan disclose the employer's deliberations regarding the changes to the benefit plan? What information do plan fiduciaries currently disclose to plan participants and beneficiaries in these circumstances, and when is this disclosure made?

17. An employer offers an early retirement program for Pension Plan F, and Plan F issues booklets providing an overview of the retirement program to all eligible employees. The booklet purports to highlight the ''basic federal tax rules'' relevant to the choice between taking the pension benefits in a lump sum or in a series of monthly installments. The booklet does not say that only qualified portions of the lump sum distributions may be rolled over to another qualified plan or IRA without being taxed and that the rest of the distribution will be taxed. The plan materials describe the basic rule that qualified portions of a lump sum distribution may be rolled over tax-free, but do not explain what ''qualified'' means and who will be affected by this distinction. Would fiduciaries currently consider the information provided in these plan materials sufficient, and, if not, what additional information do fiduciaries currently provide, when, and to whom?

18. An employer has failed to meet its obligation to pay for premiums on behalf of its employees for an insured health plan which could lead to a suspension of benefit payments or a termination of the policy. What disclosures are currently made by the insurer to plan participants under such circumstances and when are they made?

All submitted comments will be available for public inspection and will be made a part of the public record of future guidance issued by the Department, in the event that the Department determines to issue future guidance on these matters.

Authority: 29 U.S.C. 1135, 1143; Secretary of Labor's Order No. 1–87, 52 FR 13139.

Signed at Washington, DC, this 8th day of September, 2000.

Leslie Kramerich,

Acting Assistant Secretary for Pension and Welfare Benefits.

[FR Doc. 00–23603 Filed 9–13–00; 8:45 am]

BILLING CODE 4510–29–P

Federal Register

Thursday,
September 14, 2000

Part VII

Department of the Interior

Bureau of Land Management

43 CFR Part 3600 et al.

Mineral Materials Disposal; Sales; Free Use; Proposed Rule

DEPARTMENT OF THE INTERIOR

Bureau of Land Management

43 CFR Parts 3600, 3610, and 3620

[WO–620–1430–PB–24 1A]

RIN 1004–AD29

Mineral Materials Disposal; Sales; Free Use

AGENCY: Bureau of Land Management, Interior.

ACTION: Proposed rule.

SUMMARY: The Bureau of Land Management (BLM) proposes to amend its mineral materials regulations by adding or amending provisions on inspection of operations, production verification, contract renewal, procedures for cancellation, bonding, and appeals. The proposed rule also addresses the rights of purchasers and permittees versus subsequent users of the same land. BLM proposes to amend the regulations in part because notices of intended sale of mineral materials have inspired speculative entries conflicting with the proposed sale, and because BLM has encountered difficulties in verifying production. These amendments are necessary to prevent entries and uses begun after a planned sale has been announced from interfering with the sale. BLM also proposes to reorganize and simplify the regulations on mineral materials disposal.

DATES: You must submit your comments to BLM at the appropriate address below on or before November 13, 2000. BLM will not necessarily consider any comments received after the above date in making its decisions on the final rule.

ADDRESSES:

Mail: Director (630), Bureau of Land Management, Administrative Record, Room 401 LS, 1849 C Street, NW, Washington, DC 20240.

Personal or messenger delivery: Room 401, 1620 L Street, NW, Washington, DC 20036.

Internet e-mail: WOComment@blm.gov. (Include ''Attn: AD29'').

FOR FURTHER INFORMATION CONTACT: Dr. Durga N. Rimal, Solid Minerals Group, at (202) 452–0350. Persons who use a telecommunications device for the deaf (TDD) may call the Federal Information Relay Service (FIRS) at 1–800–877–8339, 24 hours a day, 7 days a week.

SUPPLEMENTARY INFORMATION:

I. Public Comment Procedures
II. Background
III. The Rule as Proposed
IV. Section-by-Section Analysis
V. Procedural Matters

I. Public Comment Procedures

A. How Do I Comment on the Proposed Rule?

If you wish to comment, you may submit your comments by any one of several methods.

- You may mail comments to Director (630), Bureau of Land Management, Administrative Record, Room 401 LS, 1849 C Street, NW, Washington, DC 20240.
- You may deliver comments to Room 401, 1620 L Street, NW, Washington, DC 20036.
- You may also comment via the Internet to WOComment@blm.gov. Please submit Internet comments as an ASCII file avoiding the use of special characters and any form of encryption. Please also include ''Attn: AD29'' and your name and return address in your Internet message. If you do not receive a confirmation that we have received your Internet message, contact us directly at (202) 452–5030.

Please make your written comments on the proposed rule as specific as possible, confine them to issues pertinent to the proposed rule, and explain the reason for any changes you recommend. Where possible, your comments should reference the specific section or paragraph of the proposal that you are addressing.

BLM may not necessarily consider or include in the Administrative Record for the final rule comments that BLM receives after the close of the comment period (see **DATES**) or comments delivered to an address other than those listed above (see **ADDRESSES**).

B. May I Review Comments Submitted by Others?

Comments, including names and street addresses of respondents, will be available for public review at the address listed under **ADDRESSES:** Personal or messenger delivery'' during regular business hours (7:45 a.m. to 4:15 p.m.), Monday through Friday, except holidays.

Individual respondents may request confidentiality, which we will honor to the extent allowable by law. If you wish to withhold your name or address, except for the city or town, you must state this prominently at the beginning of your comment. We will make all submissions from organizations or businesses, and from individuals identifying themselves as representatives or officials of organizations or businesses, available for public inspection in their entirety.

II. Background

Under the mineral materials program, BLM manages the exploration, development, and disposal of materials such as sand, stone, gravel, and other common rocks. Our primary goal is to make Federal mineral materials available by sale or free use permit when it will not be detrimental to the public interest. BLM is also responsible for the planning and inventory of mineral materials on the public lands, and prevention and abatement of their unauthorized use. BLM monitors sites, and inspects and verifies production to ensure compliance with the terms of the contract or permit. This proposal does not address vegetative materials, such as timber.

A. Authorities

The general authority for the Mineral Materials Program is the Act of July 31, 1947, as amended (30 U.S.C. 601 *et seq.*), commonly referred to as the Materials Act. This Act authorizes the Secretary of the Interior to dispose of mineral and vegetative materials from public lands.

B. How Does BLM Dispose of Mineral Materials?

BLM disposes of mineral materials from public lands by selling them and, under some circumstances, giving them away. We dispose of materials from exclusive sites used by one operator or nonexclusive sites (community pits or common use areas) used by more than one operator. Under current regulations in 43 CFR parts 3600, 3610, and 3620, and BLM policies, disposal methods are as follows:

1. Negotiated Sales

BLM will negotiate a sale contract for quantities of materials less than 100,000 cubic yards, with certain exceptions detailed in the regulations. The price will be fair market value of the minerals as BLM determines through an appraisal. Contracts have a maximum term of 5 years, with a possible one-time, one-year extension.

2. Competitive Sales

For quantities of materials greater than 100,000 cubic yards, or if BLM is aware that there is competitive interest in the materials site, we advertise the availability of the material at the particular site and sell it to the highest bidder. Contracts issued through this process have a term of no more than 10 years, but BLM may allow a one-time, one-year extension.

3. Free Use Permits

BLM issues free use permits for sand and gravel and other materials to government agencies and to non-profit organizations. A large part of mineral materials produced under the program is disposed of under free use permits to local, state, and other Federal Government agencies, including State and county highway departments, cities, and municipalities. As a government agency, you may obtain free use permits to extract specified quantities of material for public works projects. BLM may specify the amount you may extract under a government agency free use permit, and may allow your operation to continue for up to 10 years. You may not barter or sell the material.

BLM also issues free use permits to non-profit organizations for up to 5,000 cubic yards for any 12 consecutive months. These permits have a one-year term. If there is additional need, you must apply for a new permit. You also may not barter or sell this material.

C. Surface Management Operations

BLM is responsible for monitoring the sites, inspection, and production verification to ensure compliance with the terms of the contract or permit. BLM seeks (1) accurate accounting for materials you remove, (2) proper compensation to the Federal Government, and (3) protection of the environment, public health, and safety. We may use field inspections and site surveys, or high-tech methods, such as aerial surveys or computer modeling, that quantify the volume of material removed. We generally base the frequency of inspections and the choice of verification method on the size and type of disposal.

III. The Rule as Proposed

The proposed rule would substantially reorganize parts 3600, 3610, and 3620. We are reorganizing the regulations for two reasons: (1) To make them read more logically and clearly; and (2) to conform more closely to Office of the Federal Register numbering conventions. The following table shows how numbers would be changed from the existing regulations to the proposed rule.

SECTION CONVERSION TABLE

Old section	Proposed new section
Group 3600	None.
Group 3600 Note	§ 3601.9.
Part 3600	Part 3600.
Subpart 3600	Subpart 3601.
§ 3600.0–1	§ 3601.1.
§ 3600.0–3	§ 3601.3.
§ 3600.0–3(a)(3)	§ 3601.12.
§ 3600.0–4	§ 3601.6.
§ 3600.0–5	§ 3601.5.
§ 3600.0–8	§ 3601.8.
Subpart 3601	None.
§ 3601.1	§ 3601.10.
§ 3601.1–1(a)(1)	§ 3601.14.
§ 3601.1–1(a)(2)	§ 3601.12.
§ 3601.1–2(a), (c)	§ 3601.21.
§ 3601.1–2(b)	§ 3601.22.
§ 3600.0–3(a)(2)	§ 3601.13.
§ 3601.1–3	§ 3601.11.
Subpart 3602	None.
§ 3602.1	§ 3601.40.
§ 3602.1–1	§ 3601.41.
§ 3602.1–2	§ 3601.42.
§ 3602.1–3(a), (b)	§ 3601.43.
§ 3602.1–3(c), (d)	§ 3601.44.
§ 3602.2	§ 3601.30.
§ 3602.3	§ 3601.52.
None	§ 3601.51.
None	§ 3601.60.
None	§ 3601.61.
None	§ 3601.62.
Subpart 3603	None.
§ 3603.1	§§ 3601.70 through 3601.72.
None	§ 3601.80.
Subpart 3604	Subpart 3603.
§ 3604.1(a)	§ 3603.10.
§ 3604.1(b)	§ 3603.11.
§ 3604.1(c)	§ 3603.12.
§ 3604.1(d) (first sentence).	§ 3603.13.
§ 3604.1(d) (second sentence).	§ 3603.14.
§ 3604.2	§ 3603.20.
§ 3604.2(a)	§§ 3603.21 and 3603.22(b).
§ 3604.2(b)	§ 3603.22(a).
Part 3610	None.
Subpart 3610	Subpart 3602.
§ 3610.1	§ 3602.10.
§ 3610.1–1	§ 3602.11.
None	§ 3602.12.
§ 3610.1–2	§ 3602.13.
§ 3610.1–3(a)(1)–(5)	§ 3602.21(a).
§ 3610.1–3(a)(6).	§§ 3602.21(b), 3602.22(a).
§ 3610.1–3(b)	§ 3602.22(b).
§ 3610.1–4	§ 3602.23.
§ 3610.1–5	§ 3602.14.
None	§ 3602.15.
§ 3610.1–6(a), (b)	§ 3602.24.
§ 3610.1–6(c).	§§ 3602.25, 3602.26.
§ 3610.1–7	§ 3602.27.
None	§ 3602.28.
§ 3610.1–3(a)(7)	§ 3602.29.
§ 3610.2	§ 3602.30.
§ 3610.2–1	§ 3602.31.
§ 3610.2–2	§ 3602.32.
§ 3610.2–3	§ 3602.33.
§ 3610.2–4	§ 3602.34.
§ 3610.3	§ 3602.40.
§ 3610.3–1(a)	§ 3602.41.
§ 3610.3–1(b)	§ 3602.42(c).
§ 3610.3–2	§ 3602.42(a), (b).
§ 3610.3–3	§ 3602.43.
§ 3610.3–4	§ 3602.44.
§ 3610.3–5	§ 3602.45.
§ 3610.3–6	§ 3602.46.
None	§ 3602.47.
None	§ 3602.48.
None	§ 3602.49.
Part 3620	None.
Subpart 3621	Subpart 3604.
§ 3621.1	§ 3604.10.
§ 3621.1–1	§ 3604.11.
§ 3621.1–2	§ 3604.21.
§ 3621.1–3	§ 3604.23.
§ 3621.1–4(a), (c)–(d)	§ 3604.22.
§ 3621.1–4(b)	§ 3604.13.
§ 3621.1–5	§ 3604.24.
§ 3621.1–6	§ 3604.25.
§ 3621.1–7	§ 3604.26.
§ 3621.2(a)	§ 3604.12(a).
§ 3621.2(b)	§ 3604.12(b.)
§ 3621.2(c)	§ 3604.27.
Subpart 3622	Subpart 3622.

This proposed rule also incorporates material from a proposed rule published August 2, 1996 (61 FR 40373). That rule proposed to amend the bonding requirements for mineral material sales by accepting qualified certificates of deposit as surety bonds, and by changing bonding requirements for sales of $2,000 or more. As in the earlier proposed rule, bonds would be set at more realistic levels, and would ensure that amounts needed to cover the cost of reclamation will be available.

Other substantive changes in the proposed rule include the following:

(1) The rule would strengthen and clarify provisions allowing BLM to require purchasers of mineral materials to keep records to verify production and to make them available to BLM. BLM would use these records to ascertain whether purchasers have complied with regulations and contract terms. To allow BLM to verify production, the rule would require purchasers to submit production reports at least annually. It would allow BLM to require purchasers to conduct volumetric surveys of the operation site as well. See §§ 3602.28 and 3602.29.

(2) The rule would require permittees and purchasers to allow BLM to inspect their operations, conduct surveys, and estimate the volume and type of production. See § 3601.51.

(3) The rule would allow BLM to cancel permits or sales contracts for failure of the purchaser or permittee to comply with the law, regulations, or contract or permit terms. It would require BLM to provide written notice of our intent to cancel, allowing time to correct performance problems, to request an extension, or to show why

the contract or permit should not be canceled. See §§ 3601.61 and 3601.62.

(4) The rule would add a provision that when BLM designates a tract for sale of mineral materials, subsequent contracts or permits on that tract will have priority over any subsequent conflicting mining claim, entry, or other use of the land. See § 3602.12.

(5) The rule would provide that BLM may dispose of mineral materials from unpatented mining claims in accordance with Solicitor's Opinion No. M–36998, Disposal of Mineral Materials from Unpatented Mining Claims, June 9, 1999. See § 3601.13.

(6) The rule would make the provisions for reappraisal clearer. BLM would not reappraise sooner than 2 years after we issue the contract or complete a previous reappraisal. See §§ 3602.13 and 3602.48.

(7) The rule would reduce the percentage amount BLM requires for the first installment payment and in lieu of production payments under a material sales contract. See § 3602.21.

(8) The rule would provide that you must make monthly installment payments in an amount equal to the value of the materials removed the previous month. See § 3602.21.

(9) The rule would allow purchasers with contract terms of 90 days or less to request contract extensions no later than 15 days instead of 30 days before the end of the contract. See § 3602.27.

(10) The rule would increase the volume limitation for noncompetitive sales from 100,000 to 200,000 cubic yards, and for noncompetitive sales in support of a public works improvement program from 200,000 to 400,000 cubic yards. See §§ 3602.31 and 3602.32.

(11) The rule would allow the successful bidder in a competitive sale 60 days instead of 30 days to ratify and execute the contract. See § 3602.45.

(12) The rule would add a provision for renewing contracts, under which a purchaser who has paid the full contract price for the purchased mineral material may apply for renewal of the contract to allow purchase of additional material from the same site. The maximum renewal term would be 10 years, but there would be no limit on the number of renewals allowed. However, each renewal would require a reappraisal, a new environmental analysis when we find it necessary, and a possible increase or decrease in the bond required. See § 3602.47.

(13) The rule would include a cross reference to the Department of the Interior appeals regulations in 43 CFR part 4. See § 3601.80.

These regulations would apply from the date of promulgation of the rule to all future contracts and permits. They would also apply to existing contracts and permits to the extent—

- The contract or permit incorporates future regulations, and
- The regulations are not inconsistent with the express terms of the contract or permit. We solicit comments regarding whether incorporating any of the provisions of this proposed rule into existing contracts or permits would cause hardship or otherwise be inadvisable.

III. Section-by-Section Analysis

This portion of the preamble addresses only those parts of the regulations that we would reorganize or amend in a way that requires explanation.

Subpart 3601—Mineral Materials Disposal: General

This subpart would replace and combine existing subparts 3600, 3601, 3602, and 3603. It would contain the regulatory provisions common to both sales and free use of mineral materials, including definitions, limits on disposal of mineral materials, mining and reclamation plans, reclamation and removal of improvements, and unauthorized use. Part of the purpose of this rearrangement is to conform with Office of the Federal Register numbering conventions, which discourage use of ''group''—which BLM has long used—as part of an organizational structure for regulations. The rearrangement also seeks to combine related functions within the same unit of the regulations.

Authority

Section 3601.3 would describe briefly the statutory authorities for BLM to sell or otherwise dispose of mineral and other materials, to manage the public lands generally, and to collect fees and require reimbursement of administrative costs. It would not contain the repetition of the statutory provisions themselves that appear in the existing regulations. It is unnecessary to repeat the statute in the regulatory text.

Definitions

While we have not proposed to amend the definition of ''public lands'' at this point, we are aware that the Department of Agriculture uses a definition that excludes acquired lands in its administration of the Materials Act. We are reviewing this issue and would welcome comments on whether we should amend our definition.

We would add a definition for the term ''purchaser'' to distinguish a person holding a material sales contract from a free use permittee under these regulations, and revise the definition of the term ''permittee'' to refer only to the holder of a free use permit. The rule would also revise the definitions of ''community pit'' and ''common use area'' to explain better the difference between them.

The proposed rule would also remove the definition of ''unnecessary or undue degradation'' because we found that reference to this standard is not needed in this rule. The Materials Act provides that the Secretary may dispose of mineral materials if the disposal is not otherwise expressly authorized or prohibited by law and would not be detrimental to the public interest. 30 U.S.C. 601. This standard gives the Secretary broad discretion, allowing him to consider not only whether a proposed disposal might cause unnecessary or undue degradation, but other factors that could affect the public interest as well. BLM's policy statement at proposed § 3601.6(d) and the provision at proposed § 3601.11 incorporate this standard by declaring that ''BLM will not dispose of mineral materials if we determine that the aggregate damage to public lands and resources would exceed the public benefits that BLM expects to be derived from the proposed sale or free use.'' Sections 3601.41(c) and 3602.48 also ensure that mineral materials operations will include measures to prevent hazards to public health and safety and to minimize and mitigate environmental damage. Accordingly, we would remove references in the rule to ''unnecessary or undue degradation'' as needless and possibly confusing.

Finally, the proposed rule would remove the definition for ''authorized officer'' in accordance with the now prevailing practice of using the term ''BLM'' instead of ''authorized officer,'' and rearrange the defined terms in alphabetical order.

Policy

Section 3601.6 would be amended by adding a policy statement authorizing government agencies and non-profit organizations free use of mineral materials. This policy statement is new in this proposed rule, but reflects existing regulations and policy. We have included ''Territorial'' government entities, as in the statute. 30 U.S.C. 601. We recognize that at the time the statute was enacted, Alaska was a Territory that could benefit from this provision. We invite comment on whether any current Territories could benefit and whether this inclusion is currently necessary or appropriate.

Public Availability of Information

Section 3601.8 was added to the mineral material disposal regulations (as § 3600.0–8) in a final rule published in the **Federal Register** on October 1, 1998 (63 FR 52946). It merely would be renumbered and not otherwise changed in this proposed rule.

Information Collection

Section 3601.9 would codify the ''Note'' on information collection requirements that currently appears at the beginning of 43 CFR Group 3600. The Note refers to information collection clearance numbers under the Paperwork Reduction Act, 44 U.S.C. 3501 *et seq.* The proposed rule would not amend this provision except to relocate it, conform the parts citation to the amendments in this proposed rule, and simplify the last sentence. This codification is in response to the style requirements of the Office of the Federal Register.

Limits on BLM's Discretion to Dispose of Mineral Materials

The next group of sections, 3601.10 to 3601.14, would detail the effects of other uses and land designations on BLM's ability to dispose of mineral materials from public lands.

Section 3601.13 How Can I Obtain Mineral Materials From Federal Lands Managed By Other Agencies?

Section 1 of the Materials Act (30 U.S.C. 601) allows the Secretary of the Interior to dispose of mineral materials from public lands. It also allows the Secretary to dispose of such materials from lands that have been withdrawn for the use of other Federal agencies and State and local government agencies, but only with the consent of that other governmental agency or unit. Under the proposed rule, BLM would dispose of mineral materials from such withdrawn lands only with the consent of the affected agency or governmental unit. BLM would not dispose of mineral materials from lands managed by the U.S. Forest Service or the National Park Service, or from Indian lands. This is not a change from current procedures, which are restated and relocated here from the Authority section of the existing regulations, 43 CFR 3600.0–3(a)(2) and (3).

Section 3601.14 When Can BLM Dispose of Mineral Materials From Unpatented Mining Claims?

A substantive change in these provisions is that § 3601.14 would recognize BLM's authority to dispose of mineral materials from unpatented mining claims, unlike current § 3601.1–1, which restricts such disposal. This change is based on Solicitor's Opinion No. M–36998, issued on June 9, 1999, which sets out the authority for such disposal. Prior to issuance of this Opinion, the Department proposed language as part of the revision of 43 CFR subpart 3809 (64 FR 6421–6448 at proposed § 3809.101(d)) that would have authorized BLM's disposal of mineral materials from unpatented mining claims where the mining claimant gave BLM a written waiver. Proposed § 3601.14 would broaden that authority consistent with the Opinion, which makes clear that BLM's authority is not contingent on receiving a waiver from the claimant.

Rights of Parties

The next 2 sections, 3601.21 and 3601.22, describe the rights of the parties to a mineral materials disposal contract or permit. Section 3601.22 would be virtually unchanged from current § 3601.1–2(b).

Section 3601.21 would combine portions of 2 sections of the existing regulations, 3601.1–2(a) and (c), to explain the rights of the purchaser of a materials sales contract and the holder of a free use permit. These rights include the extraction, removal, processing, and stockpiling of material during the life of the contract or permit, and use and occupancy of the land if BLM determines it necessary for the operation. It would also state that subsequent authorized users of the land would have rights subordinate to the holder of the contract or permit. Except for the consolidation of sections, the proposed rule does not change this provision substantively.

Section 3601.30 Pre-Application Activities

The only substantive change to this section from current § 3602.2 would be new language limiting to 90 days the effectiveness of a letter from BLM authorizing sampling and testing. BLM may extend the 90-day authorization for another 90 days if we agree that extension is necessary. BLM believes a time limit on authorized activities is desirable to maintain control over the land. This 90-day period should be sufficient in most cases, and the possible extension would provide flexibility for cases requiring more time.

Section 3601.40 Mining and Reclamation Plans

The next 5 sections address mining and reclamation plans, describing what they must contain, how to submit them, and how BLM reviews, modifies, and approves them. These sections are based on current §§ 3602.1 through 3602.1–3. We would add language to § 3601.43 explaining that mining and reclamation plans are part of the contract or permit. We invite comment on whether we should retain the language in the proposed rule in § 3601.44 that would substantively amend the provision to allow BLM to require modification of a plan to adjust to changed conditions or to correct an oversight even if the purchaser or permittee does not agree.

Section 3601.50 Administration of Sales Contracts and Free Use Permits

This heading would introduce 2 sections describing BLM's inspection rights and the purchaser's or permittee's obligation to remove improvements and equipment after finishing operations.

Section 3601.51 How Will BLM Inspect My Operation?

This is a new section that would require purchasers and permittees to allow BLM to inspect the mine operation, conduct surveys, and verify production and compliance with contract or permit terms and regulatory requirements. The change is prompted by internal BLM reviews and reports from the Office of the Inspector General of the Department of the Interior that show that the United States has been losing revenues due to under-reporting of mineral materials produced from the public lands, and from other forms of theft. Adding these inspection provisions will strengthen BLM's ability to spot-check operations for compliance with regulations and with the terms of contracts and permits. BLM is not proposing constant monitoring, as the cost would be prohibitive.

Section 3601.52 When Must I Remove Improvements and Equipment After I Finish My Operations?

This proposed section would be based on current § 3602.3. The only substantive amendment proposed is to add that cancellation, as well as expiration, of a contract or permit, will cause BLM to set a deadline of no more than 90 days for you to remove improvements and equipment.

Section 3601.60 Cancellation

Section 3601.60 introduces 2 new sections that would set forth the grounds and procedures for BLM to cancel permits and contracts. BLM may cancel a permit or contract if you fail to comply with the Materials Act or the applicable regulations, or default in performing any of the terms or stipulations of the contract or permit. Under the rule, BLM would give you written notice of performance problems

and 30 days to correct them or to request more time to correct them or to show why BLM should not cancel the contract or permit. If you fail to make the corrections or the required showing within the time limit (including any extension granted), BLM would be able to cancel the contract or permit.

These additions are necessary to allow BLM to promote efficient and expeditious development of these resources, and to protect the environment.

Section 3601.80 Appeals

Although this section is new in this proposed rule, it reflects existing appeals rights. Parties adversely affected by a BLM decision may appeal to the Interior Board of Land Appeals, Office of Hearings and Appeals. You must file your appeal in writing in the office of the BLM official who made the decision within 30 days after the date of receipt of the decision. This section would direct appellants to the regulations in 43 CFR part 4 for appeals procedures.

Subpart 3602 Mineral Materials Sales

This subpart would replace existing part 3610 and subpart 3610. It would contain the requirements and procedures pertaining to sales of mineral materials, except those from community pits and common use areas, which are covered in the next subpart.

Section 3602.10 Applying for a Mineral Materials Sales Contract

The first 4 sections under this heading explain the application, pricing, and bonding process, and the effect of tract designation. Most of these provisions are carried over from the existing regulations, but § 3602.12 would be new in the proposed rule. It would explain the relative rights and priorities among BLM land users when BLM designates tracts for competitive or noncompetitive sale of mineral materials. Under this section, any contract or permit BLM authorizes within 2 years after the date we designate the tract would convey a right to remove the materials superior to any subsequent claim, entry, or other conflicting use of the land. This right would not prevent other uses or segregate the land from the operation of the public land laws, including the mining and mineral leasing laws. However, the rule would not allow a subsequent use to interfere with the extraction of mineral materials. Notation of the tract designation in the public land records would establish this superior right. For good cause, BLM could extend the 2-year period for one additional year. The Secretary has broad authority under the Materials Act, 30 U.S.C. 601, to prescribe regulations to govern the disposal of mineral materials. The proposed provision is necessary to prevent other claims, especially speculative ones, from interfering with and raising the cost of planned development of mineral materials.

Section 3602.13 How Does BLM Measure and Establish the Price of Mineral Materials?

The proposed rule would amend this section to make it clear that BLM may reappraise at intervals of 2 years or more in order to adjust the contract price. Paragraph (b) of the existing regulations at § 3610.1–2, which was written with the intent of preventing BLM from reappraising any more often than every 2 years, can be read to require reappraisal every 2 years, whether circumstances suggest that an appraisal may be needed or not. This proposed rule is designed to avoid such a misinterpretation.

Section 3602.14 What Kind of Financial Security Does BLM Require?

This section appeared as § 3610.1–5 in a proposed rule published on August 2, 1996 (61 FR 40373). That proposed rule attracted no public comments. The proposed rule published today would not make any substantive changes in that provision. It would require, for materials sales contracts of $2,000 or more, a performance bond of at least 5 percent of total contract value, plus sufficient funds, at least $500, to pay for the reclamation required in the contract. If the contract sale is from a community pit and the purchaser pays a reclamation fee, we will not require the reclamation portion of the performance bond.

The section would also allow BLM to require a performance bond of not more than 20 percent of the total contract value for contract sales of less than $2,000. Finally, it would list the types of instruments that are acceptable as performance bonds.

Section 3602.15 What Will Happen to My Bond if I Transferred All of My Interests or Operations to Another Bonded Party?

This section is new in this proposed rule. It provides that BLM will cancel your bond obligations following an assignment if the assignee assumes all of your existing liabilities.

Section 3602.20 Administration of Mineral Materials Sales

Here begins a series of sections describing, first, the actions BLM may take, and second, the responsibilities of purchasers, during the course of operations under a mineral materials sales contract.

Section 3602.21 What Payment Terms Apply to My Mineral Materials Sales Contract?

This section of the proposed rule is derived from portions of § 3610.1–3 of the existing rule. The proposed rule would make a few substantive changes.

- It would establish the payment terms for mineral materials sales contracts. Small contracts of $2,000 or less would still require you to pay the full amount upon signing the contract. Upon signing the contract, for a noncompetitive sale, or upon submitting a bid, in a competitive sale, for contracts for more than $2,000, the rule would reduce the initial installment you must pay to the greater of $500 or 5 percent (instead of 10 percent) of the purchase price. Experience shows that an initial payment of 5 percent on larger contracts is sufficient to protect the public interest.
- The rule would remove as unnecessary the requirement that you make an advance payment before removing materials: the requirement that you pay the first installment with the bid or upon signing the contract is equivalent to requiring such an advance payment.
- Until production begins, you would be obligated to make an annual payment equal to the first installment. Once production begins, the rule would require you to pay for the amount of material you produce each month, and either produce annually enough to pay an amount equal to the first installment on or before the contract anniversary or, in lieu of such production, make an annual payment in the amount of the first installment. The deadline for paying the entire amount of the contract would be 60 days before its expiration date. If you fail to make the required payments, you would forfeit all payments made to date. The only changes proposed in this portion of the section are to improve clarity.

Section 3602.22 When Will a Contract Terminate?

This section is new in the proposed rule, although it would incorporate parts of current § 3610.1–3. It would state that a contract can terminate in 3 ways:

(1) When the contract term expires;

(2) If BLM cancels the contract for cause under § 3601.60; or

(3) By mutual agreement of BLM and the purchaser.

Section 3602.23 When Will BLM Make Refunds or Allow Credits?

Section 3602.23 merely restates and clarifies current § 3610.1–4 provisions regarding refunds and credits. The changes are not substantive.

Section 3602.24 When May I Assign My Materials Sales Contract?

and

Section 3602.25 What Rights and Responsibilities Does My Assignee Assume?

These 2 sections of the proposed rule are based on paragraphs (a) and (b) and paragraph (c), respectively, of § 3610.1–6 in the existing regulations. Except for presenting them more clearly, the proposed rule would make no change in these provisions.

Section 3602.26 If I Assign My Contract, When Do My Obligations Under the Contract End?

This section would clarify current § 3610.1–6. When BLM approves an assignment, the assignor is released from liability for actions the assignee subsequently takes, but continues to be responsible, along with the assignee, for obligations that accrued before the approval. This protects the public's interest by ensuring that obligations such as reclamation arising from actions taken by the assignor are fulfilled. For example, to the extent the assignor disturbed an area to create a pit, the assignor would remain liable for reclamation of that area if problems arose enforcing reclamation provisions against the assignee.

Section 3602.27 When Will BLM Extend the Term of a Contract?

This section would amend § 3610.1–7 of the current regulations only by adding a provision allowing BLM to extend contracts with terms of 90 days or less if the purchaser requests it in writing no later than 15 days (instead of 30 days) before the expiration. This change is made to provide a more reasonable deadline for letting BLM know that you cannot complete a short-term contract on time.

Section 3602.28 What Records Must I Maintain and How Long Must I Keep Them?

and

Section 3602.29 How Will BLM Verify My Production?

These 2 sections are new in the proposed rule. They would allow BLM—

- To require purchasers to keep, and make available to BLM, records, maps, and surveys relating to production verification and valuation for 6 years;
- To require purchasers to submit a report annually (or more frequently if BLM requires) of the amount of mineral materials mined or removed under their contract of sale; and
- To require pre-operation, annual, and post-operation surveys of mine sites.

These requirements would allow BLM to verify that you make required payments and check your compliance with statutes, regulations, and contract terms.

Section 3602.30 Noncompetitive Sales

This section would apply the general provisions on sales in proposed § 3602.11 through 3602.29 to noncompetitive sales of mineral materials, and lead into a series of sections discussing noncompetitive sales.

Section 3602.31 What Volume Limitations Generally Apply to Noncompetitive Mineral Materials Sales?

This section is not substantively changed in the proposed rule from current § 3610.2–1, except to increase the amount that BLM may sell noncompetitively. It would set a maximum quantity for noncompetitive sale of 200,000 cubic yards (or weight equivalent) in any one State for the benefit of any one purchaser, in any 12-month period. These limits do not apply to mineral material sales in Alaska that BLM determines are needed for construction, operation, maintenance, or termination of the Trans-Alaska Pipeline System or the Alaska Natural Gas Transportation System. The volume limitations also do not apply if BLM determines that competition would not be possible, or that there is insufficient time to invite competitive bids due to an emergency affecting public property, health, or safety.

Section 3602.32 What Volume and Other Limitations Pertain to Noncompetitive Sales Associated With Public Works Projects?

This section would amend current § 3610.2–2 by increasing the noncompetitive sale limit for urgent public works projects from 200,000 cubic yards to 400,000 cubic yards. BLM may make such a sale if we find the sale to be in the public interest, and time is insufficient for a competitive sale.

Section 3602.33 How Will BLM Dispose of Mineral Materials for Use in Development of Federal Mineral Leases?

This section, like current § 3610.2–3, would allow BLM to sell up to 200,000 cubic yards of mineral materials in one State in any 12-month period noncompetitively for use in connection with the development of a Federal mineral lease. It would make clear that BLM will not charge for mineral materials that a Federal lessee needs to move in order to extract minerals under a Federal lease, so long as the materials remain within the boundaries of the lease. It would amend the current section by allowing such materials to be used without charge whether or not the lessee uses them for lease development.

Section 3602.40 Competitive Sales

Following this heading is a series of sections explaining the process for competitive sales of mineral materials. Although all of the sections would be renumbered from the current regulations, this preamble only addresses those sections substantively changed.

Section 3602.43 How does BLM Conduct Competitive Mineral Materials Sales?

In paragraph (b) of this section we explain what is a minor deficiency in a bid that BLM might waive. Our intent is that a defect that would not change the outcome of the bidding would not invalidate your bid. An example might be if you inadvertently provide an incorrect telephone number or other item of personal data.

Section 3602.45 What Conditions Must I Meet Before BLM Will Issue Me a Contract?

The principal substantive change in this section in the proposed rule from current § 3610.3–5 would allow the successful bidder an additional 30 days to comply with BLM information requests and to sign and return the contract, performance bond, and mining and reclamation plan, if required. The section would continue to allow BLM to extend this period an additional 30 days upon request. This change would allow you more reasonable deadlines to meet. If you fail to sign and return the contract by the due date you would forfeit the bid deposit and BLM would offer the contract to the next highest bidder for the amount of the original high bid. The section would allow BLM to include additional provisions and stipulations for resource and environmental protection. It also makes clear that BLM may refuse to issue a contract to the highest bidder if we determine that the

bidder cannot fulfill the obligations of the contract.

Section 3602.46 What Is the Term of a Competitive Contract?

This section would clarify current § 3610.3–6. It confirms that the standard term for a mineral materials contract is 10 years, but would make it clear that contracts can be extended and renewed.

Section 3602.47 When and How May I Renew My Competitive Contract?

and

Section 3602.48 What May BLM Require When Renewing My Contract?

These sections would be new in the proposed rule. They would explain when and how to apply for contract renewal and what BLM may require when renewing a contract. A prerequisite for renewal would be payment of the full contract price of the initial contract. BLM would allow you to renew your contract in order to extract additional materials, not to complete the initial contract. You would be required to apply for renewal 90 days before the expiration date. Renewal would be for a maximum term of 10 years, but the rule would not limit the number of renewals. The rule would require reappraisal for each renewal, and would allow BLM to adjust bond requirements and impose environmental protection measures. Renewals are a less costly and more efficient alternative to reapplying, when a purchaser wishes to continue extracting materials from a particular site. For competitive contracts offered after the effective date of this rule, the sale notice would specify whether the contract was renewable under proposed § 3602.42(b)(14). For existing contracts, BLM would decide upon request by the purchaser whether that contract is renewable. The rule would allow you to make the request at any time, but not later than 90 days before the contract expires.

Section 3602.49 When Will BLM Issue a Non-Renewable Contract?

This section would be new in this proposed rule. It is occasionally desirable for BLM to conduct a competitive sale of mineral materials under which the purchaser is limited to a single term to remove the contracted materials. BLM would issue such a contract if, for example, we contemplate a second use of the land after the conclusion of the first term or expect that the site may be appropriate for future use by multiple operators or by the local community. For instance, BLM may sell gravel from a flood control area before construction of the flood control structure, or may sell valuable deposits before a land exchange or sale. This section would provide this option for limited-term contracts.

Subpart 3603—Community Pits and Common Use Areas

This subpart would renumber, reorganize, and clarify, but not substantively amend, current subpart 3604. It contains regulations on the sale of mineral materials from community pits and common use areas, which is referred to as non-exclusive disposal in the existing regulations. This subpart addresses only sales from these areas. The next subpart covers free use. See the Section Conversion Table in part II of this Supplementary Information for the source of each of the renumbered sections.

Subpart 3604—Free Use of Mineral Materials

Subpart 3604 on free use of mineral materials would replace subpart 3621 in the existing regulations. There are no substantive changes in this subpart in the proposed rule. See the Section Conversion Table in part II of this Supplementary Information for the source of each of the renumbered sections.

Subpart 3622—Free Use of Petrified Wood

BLM is planning to include revised regulations for the free use of petrified wood in a future proposed rule addressing the use of fossils on the public lands. We have therefore decided not to propose extensive changes to subpart 3622 at this time. We do propose to change cross-references to conform to changes made in this rule, and to conform to current **Federal Register** cross-reference style. The only substantive change is to remove the phrase ''prevents unnecessary and undue degradation of lands'' in accordance with our explanation under the Definitions section of this preamble, above, and substitute language referring to the prevention of hazards and minimization and mitigation of environmental damage, to be consistent with the remainder of the proposed rule. We note that the wording of the standard as stated in the current rule is, in any event, in error: the correct phrase from 43 U.S.C. 1732(b) would be ''unnecessary or undue degradation.''

IV. Procedural Matters

The principal author of this proposed rule is Dr. Durga N. Rimal of the Solid Minerals Group, assisted by Ted Hudson of the Regulatory Affairs Group, Washington Office, Bureau of Land Management.

Regulatory Planning and Review (E.O. 12866)

This document is not a significant rule and is not subject to review by the Office of Management and Budget under Executive Order 12866.

(1) This rule will not have an annual economic effect of $100 million or adversely affect in a material way the economy, an economic sector, productivity, competition, jobs, the environment, public health or safety, or other units of government or communities. A cost-benefit and economic analysis is not required.

During fiscal years 1996 through 1998, BLM annually issued an average of a little over 2,900 mineral materials free use permits and sales contracts, valued at a little less than $12 million over the life of the contracts. Of this value, about $4.2 million was disposed of under free-use permits, and about $1.3 million was sold in non-exclusive sales from community pits, with an average sale of about $570. There were 395 exclusive sales in an average fiscal year during the period, valued at a little less than $6.5 million, with an average sale of a little over $16,400.

Average annual production for these 3 years, under existing and new permits and contracts (some being multi-year contracts) , exclusive and non-exclusive, amounted to $8.75 million.

The changes proposed in this rule are:

- Adding procedures for inspection, production verification, and cancellation of contracts;
- Protecting material sales from interference by subsequent land users and claimants;
- Allowing BLM to dispose of mineral materials from unpatented mining claims;
- Reducing the amount of required installment payments;
- Increasing the value threshold triggering the requirement for competitive bidding;
- Allowing additional time to prepare and submit mining and reclamation plans;
- Adding certificates of deposit as an acceptable financial instrument for bonds;
- Ensuring that bonding amounts for sales contracts of $2,000 or more are adequate to perform reclamation; and
- Adding provision for the renewal of competitive sales contracts.

These changes should not have appreciable effects on the economy, and any effects certainly will not approach $100 million annually.

(2) This rule will not create a serious inconsistency or otherwise interfere

with an action taken or planned by another agency. The proposed rule will have no effect on disposal of mineral materials from national forest lands. The rule will not be in conflict with State regulations or requirements. The rule will have no effect on lands over which States have jurisdiction, other than to require their consent before materials may be disposed of from public lands that are withdrawn for their use, as already required. The rule expressly does not apply to national park lands or to Indian lands.

(3) This rule does not alter the budgetary effects of entitlements, grants, user fees, or loan programs or the rights or obligations of their recipients. BLM sells mineral materials at not less than the fair market value of the materials extracted, except in the instance of free use. The proposed rule will not have an effect on user fees.

(4) This rule does not raise novel legal or policy issues.

Regulatory Flexibility Act

The Department of the Interior certifies that this rule will not have a significant economic effect on a substantial number of small entities as defined under the Regulatory Flexibility Act (5 U.S.C. 601 *et seq.*). For the purpose of this section a ''small entity'', as defined by the Small Business Administration for mining and quarrying of nonmetallic minerals, except fuels, is considered to be an individual, limited partnership, or small company (together with its affiliates), with fewer than 500 employees. Most sand and gravel companies and other mineral material enterprises that purchase mineral materials from BLM are small businesses, employing fewer than 500 persons, and many governmental units that may obtain free use permits are also small entities.

Nationwide average production of crushed stone and sand and gravel used for construction for 1996–1998 was about $12.3 billion per year. The value of production from public lands is a small portion of this figure. For instance, the value of mineral materials produced from mineral material sales contracts averaged about $74 million or less than ⅔ of 1 percent of the national production. (Note that this represents the value of the product free on board (fob) at the pit, not the fair market value of the in-place (in situ) material. Experience shows the average in-place value to be about 8% of the fob price.) Even when we add production from free use permits the total annual production averages about $119 million, still under 1% of the national total. The specific changes in this rule, including changes in bonding requirements for material sales contracts of $2,000 or more, should not have an appreciable effect on small business. For average operations (contracts of $57,000) the bond amount is expected to decrease from $11,400 to $7,850, a reduction of $3,550. Therefore, the impact of this rule on the entire industry, including small business entities, is expected to be minor, and neither an initial Regulatory Flexibility Analysis nor a Small Entity Compliance Guide is required.

Small Business Regulatory Enforcement Fairness Act (SBREFA)

This rule is not a major rule under 5 U.S.C. 804(2), the Small Business Regulatory Enforcement Fairness Act. This rule:

a. Will not have an annual effect on the economy of $100 million or more. See the discussion in the previous section of this preamble.

b. Will not cause a major increase in costs or prices for consumers, individual industries, Federal, State, or local government agencies, or geographic regions. The rule should have little or no effect on prices of mineral materials, which are determined under the regulations by fair market value. The changes in the rule, which are described in the previous section of the preamble, should have no appreciable effect on costs.

c. Will not have significant adverse effects on competition, employment, investment, productivity, innovation, or the ability of U.S.-based enterprises to compete with foreign-based enterprises. The rule should have marginal economic effects on a small segment of one industry. The mineral materials industry deals with materials that generally have high bulk and low unit value, and thus does not have appreciable foreign competition due to the high costs of transportation.

Unfunded Mandates Reform Act

This rule does not impose an unfunded mandate on State, local, or tribal governments or the private sector of more than $100 million per year. The rule does not have a significant or unique effect on State, local or tribal governments or the private sector. The existing and proposed regulations both allow local government agencies free use of mineral materials for public projects. Such governments must show that their proposed use is a public project, and meet certain other requirements stated in the regulations. The rule would not require anything of State or local governments other than an application for a free use permit. A statement containing the information required by the Unfunded Mandates Reform Act (2 U.S.C. 1501 *et seq.*) is not required.

Takings (E.O. 12630)

In accordance with Executive Order 12630, BLM has found that the rule does not have significant takings implications. No takings of personal or real property will occur as a result of this rule. Although the rule does include new provisions for contract cancellation, a contract issued under these regulations does not convey a property interest protected by the Takings Clause. A takings implication assessment is not required.

Federalism (E.O. 13132)

In accordance with Executive Order 13132, BLM finds that the rule does not have sufficient federalism implications to warrant the preparation of a federalism summary impact statement. The main connection the mineral materials program regulations have with other levels of government is in the context of free use of these resources. The rule does not place any new burdens on this use. The rule does not have substantial direct effects on the States, on the relationship between the national government and the States, or on the distribution of power and responsibilities among the various levels of government. The rule does not preempt State law.

Civil Justice Reform (E.O. 12988)

In accordance with Executive Order 12988, BLM finds that this rule does not unduly burden the judicial system and meets the requirements of sections 3(a) and 3(b)(2) of the Order. BLM consulted with the Department of the Interior's Office of the Solicitor throughout the drafting process.

Government-to-Government Relationship With Tribes

In accordance with the President's memorandum of April 29, 1994, ''Government-to-Government Relations with Native American Tribal Governments'' (59 FR 22951) and 512 DM 2, we have evaluated possible effects on Federally recognized Indian tribes and have determined that there are no effects on the tribes. The Materials Act expressly excludes Indian lands and lands set aside or held for the benefit or use of Indians from the effects of the statute, and thereby from the effects of the implementing regulations. The regulations do not bar Indians or Tribes from buying mineral materials from public lands, although the abundance of these materials on Indian lands has made such purchases

unnecessary. We do not know of any instances of tribal use of mineral materials from public lands.

Paperwork Reduction Act

This regulation requires an information collection from 10 or more parties and a submission under the Paperwork Reduction Act is required. An OMB form 83-I prepared by BLM has been reviewed by the Department and sent to the Office of Management and Budget (OMB) for approval as required by 44 U.S.C. 3501 *et seq.* The collection of this information will not be required until it has been approved by OMB.

National Environmental Policy Act

This rule does not constitute a major Federal action significantly affecting the quality of the human environment. A detailed statement under section 102(2)(C) of the National Environmental Policy Act of 1969 (NEPA), 42 U.S.C. 4332(2)(C) is not required.

BLM has determined that any environmental effects that this proposed rule may have are too broad, speculative, or conjectural to lend themselves to meaningful analysis. Each sale of mineral materials other than from a community pit or common use area, each designation of the community pit or common use area itself, and each free use permit, will be subject to evaluation under NEPA. The proposed rule also provides that BLM will perform additional NEPA analyses as required before renewing mineral materials sales contracts. Therefore, the proposed rule is categorically excluded from environmental review under section 102(2)(C) of the National Environmental Policy Act, pursuant to 516 Departmental Manual (DM) 2.3A and 516 DM 2, Appendix I, Item 1.10, and does not meet any of the 10 criteria for exceptions to categorical exclusion listed in 516 DM 2, Appendix 2. Pursuant to Council on Environmental Quality regulations (40 CFR 1508.4) and the environmental policies and procedures of the Department of the Interior, the term ''categorical exclusion'' means a category of actions that do not individually or cumulatively have a significant effect on the human environment and that have been found to have no such effect in procedures adopted by a Federal agency and for which neither an environmental assessment nor an environmental impact statement is required.

Clarity of This Regulation

Executive Order 12866 requires each agency to write regulations that are easy to understand. We invite your comments on how to make this proposed rule easier to understand, including answers to questions such as the following: (1) Are the requirements in the proposed rule clearly stated? (2) Does the proposed rule contain technical language or jargon that interferes with its clarity? (3) Does the format of the proposed rule (grouping and order of sections, use of headings, paragraphing, etc.) aid or reduce its clarity? (4) Would the rule be easier to understand if it were divided into more (but shorter) sections? (A ''section'' appears in bold type and is preceded by the symbol ''§ '' and a numbered heading; for example, ''§ 3601.21 What rights does a person acquire under a materials sales contract or use permit?''.) (5) Is the description of the proposed rule in the ''Supplementary Information'' section of this preamble helpful in understanding the proposed rule? What else could we do to make the proposed rule easier to understand?

Send a copy of any comments that concern how we could make this proposed rule easier to understand to: Office of Regulatory Affairs, Department of the Interior, Room 7229, 1849 C Street NW, Washington, DC 20240. You may also e-mail the comments to this address: Execsec@ios.doi.gov.

List of Subjects

43 CFR Part 3600

Governmental contracts, Public lands-mineral resources, Reporting and recordkeeping requirements, Surety bonds.

43 CFR part 3610

Governmental contracts, Public lands-mineral resources, Reporting and recordkeeping requirements, Surety bonds.

43 CFR part 3620

Public lands-mineral resources, Reporting and recordkeeping requirements.

Dated: August 1, 2000.

Sylvia V. Baca,

Assistant Secretary of the Interior.

Under the authorities cited below, and for the reasons stated in the Supplementary Information, BLM proposes to amend Subchapter C, Chapter II, Subtitle B of Title 43 of the Code of Federal Regulations, as follows:

1. Part 3600 is revised to read as follows:

PART 3600—MINERAL MATERIALS DISPOSAL

Subpart 3601—Mineral Materials Disposal; General Provisions

Sec.

Fundamental Provisions

3601.1 Purpose.
3601.3 Authority.
3601.5 Definitions.
3601.6 Policy.
3601.8 Public availability of information.
3601.9 Information collection.

Limitations on Disposal of Mineral Materials

3601.10 Limitations on BLM's discretion to dispose of mineral materials.
3601.11 When will environmental considerations prevent BLM from disposing of mineral materials?
3601.12 What areas does BLM exclude from disposal of mineral materials?
3601.13 How can I obtain mineral materials from Federal lands managed by other agencies?
3601.14 When can BLM dispose of mineral materials from unpatented mining claims?

Rights of Purchasers and Permittees

3601.20 Rights of parties.
3601.21 What rights does a person acquire under a materials sales contract or use permit?
3601.22 What rights remain with the United States when BLM sells or issues a permit for mineral materials?

Pre-Application Sampling and Testing

3601.30 Pre-application activities—how and when may I sample and test mineral materials?

Mining and Reclamation Plans

3601.40 Mining and reclamation plans.
3601.41 What information must I include in my mining plan?
3601.42 What information must I include in my reclamation plan?
3601.43 How will I know when BLM approves my mining and reclamation plans?
3601.44 How and when may my mining or reclamation plan be modified?

Contract and Permit Administration

3601.50 Administration of sales contracts and free use permits.
3601.51 How will BLM inspect my operation?
3601.52 After I finish my operations, when must I remove improvements and equipment?

Contract and Permit Cancellation

3601.60 Cancellation.
3601.61 When may BLM cancel my contract or permit?
3601.62 Cancellation procedure.

Unauthorized Use

3601.70 Unauthorized use.
3601.71 What constitutes unauthorized use?
3601.72 What are the consequences of unauthorized use?

Appeals

3601.80 How do I appeal a final decision by BLM?

Subpart 3602—Mineral Materials Sales

Applications

3602.10 Applying for a mineral materials sales contract.
3602.11 How do I request a sale of mineral materials?
3602.12 How does the mineral materials sales process affect other users of public lands that are subject to a sale designation?
3602.13 How does BLM measure and establish the price of mineral materials?
3602.14 What kind of financial security does BLM require?
3602.15 What will happen to my bond if I transferred all of my interests or operations to another bonded party?

Administration of Sales

3602.20 Administration of mineral materials sales.
3602.21 What payment terms apply to my mineral materials sales contract?
3602.22 When will a contract terminate?
3602.23 When will BLM make refunds or allow credits?
3602.24 When may I assign my materials sales contract?
3602.25 What rights and responsibilities does my assignee assume?
3602.26 If I assign my contract, when do my obligations under the contract end?
3602.27 When will BLM extend the term of a contract?
3602.28 What records must I maintain and how long must I keep them?
3602.29 How will BLM verify my production?

Noncompetitive Sales

3602.30 Noncompetitive sales.
3602.31 What volume limitations generally apply to noncompetitive mineral materials sales?
3602.32 What volume and other limitations pertain to noncompetitive sales associated with public works projects?
3602.33 How will BLM dispose of mineral materials for use in developing Federal mineral leases?
3602.34 What is the term of a noncompetitive contract?

Competitive Sales

3602.40 Competitive sales.
3602.41 When will BLM sell mineral materials on a competitive basis?
3602.42 How does BLM publicize competitive mineral materials sales?
3602.43 How does BLM conduct competitive mineral materials sales?
3602.44 How do I make a bid deposit?
3602.45 What conditions must I meet before BLM will issue me a contract?
3602.46 What is the term of a competitive contract?
3602.47 When and how may I renew my competitive contract?
3602.48 What may BLM require when renewing my contract?
3602.49 When will BLM issue a non-renewable contract?

Subpart 3603—Community Pits and Common Use Areas

Disposal of Materials—Community Pits and Common Use Areas

3603.10 Disposal of mineral materials from community pits and common use areas.
3603.11 What rights pertain to users of community pits?
3603.12 What rights pertain to users of common use areas?
3603.13 What price does BLM charge under materials sales contracts for mineral materials from community pits and common use areas?
3603.14 What plans do I need to prepare to mine or remove mineral materials from a community pit or common use area?

Reclamation

3603.20 Reclamation.
3603.21 What reclamation requirements pertain to community pits and common use areas?
3603.22 What fees must I pay to cover the cost of reclamation of community pits and common use areas?

Subpart 3604—Free Use of Mineral Materials

Obtaining Free Use Permits

3604.10 Permits for free use of mineral materials.
3604.11 How do I apply for a free use permit?
3604.12 Who may obtain a free use permit?
3604.13 When will BLM decline to issue a free use permit to a qualified applicant?

Administration of Free Use

3604.20 Administration of free use permits.
3604.21 What is the term of a free use permit?
3604.22 What conditions and restrictions pertain to my free use permit?
3604.23 When and how may I assign my free use permit?
3604.24 Who may remove materials on my behalf?
3604.25 What bond requirements pertain to free use permits?
3604.26 When will BLM cancel my permit?
3604.27 What rights does a free use permit give me against other users of the land?

Authority: 30 U.S.C. 601 *et seq.*; 43 U.S.C. 1201, 1732, 1733, 1740; Sec. 2, Act of September 28, 1962 (Pub. L. 87–713, 76 Stat. 652).

Subpart 3601—Mineral Materials Disposal; General Provisions

Fundamental Provisions

§ 3601.1 Purpose.

The regulations in this part establish procedures for the exploration, development, and disposal of mineral material resources on the public lands, and for the protection of the resources and the environment. The regulations pertain to both permits for free use and contracts for sale.

§ 3601.3 Authority.

(a) The authority for BLM to dispose of sand, gravel, and other mineral and vegetative materials that are not subject to mineral leasing or location under the mining laws is found in the Act of July 31, 1947, as amended (30 U.S.C. 601 *et seq.*), commonly referred to as the Materials Act. This authority extends to sale and free use of these materials. The authority for BLM to allow limited quantities of petrified wood to be removed without charge from public lands is found in section 2 of the Act of September 28, 1962 (Pub. L. 87–713, 76 Stat. 652).

(b) Section 302 of the Federal Land Policy and Management Act of 1976 (FLPMA) (43 U.S.C. 1732) provides the general authority for BLM to manage the use, occupancy, and development of the public lands under the principles of multiple use and sustained yield in accordance with the land use plans developed under FLPMA.

(c) Section 304(b) of FLPMA (43 U.S.C. 1734) and the Independent Offices Appropriation Act of 1952 (31 U.S.C. 9701) authorize the U.S. Government to collect fees and to require reimbursement of its costs.

§ 3601.5 Definitions.

As used in this part the term:

Act means the Materials Act of July 31, 1947, as amended (30 U.S.C. 601, *et seq.*).

BLM means the Bureau of Land Management.

Common use area means a generally broad geographic area from which BLM can make disposals of mineral materials to many persons, with only negligible surface disturbance. The use is dispersed throughout the area.

Community pit means a relatively small, defined area from which BLM can make disposals of mineral materials to many persons. The surface disturbance is usually extensive in the confined area.

Mineral materials include, but are not limited to, petrified wood and common varieties of sand, stone, gravel, pumice, pumicite, cinders, and clay.

Performance bond means a bond to ensure compliance with the terms of the contract and reclamation of the site as BLM requires.

Permittee means any Federal, State, or territorial agency, unit, or subdivision, including municipalities, or any non-profit organization, to which BLM has issued a free use permit for the removal of mineral materials from the public lands.

Public lands means any lands and interest in lands owned by the United States and administered by the

Secretary of the Interior through the Bureau of Land Management without regard to how the United States acquired ownership, except lands held for the benefit of Indians, Aleuts, and Eskimos.

Purchaser means any person, including a business or government entity, buying or holding a contract to purchase mineral materials on the public lands.

§ 3601.6 Policy.

It is BLM's policy:

(a) To sell mineral material resources under BLM's jurisdiction at not less than fair market value;

(b) To prevent unauthorized removal of mineral materials;

(c) To require that all removals of mineral materials be properly accounted for;

(d) To permit free use of these materials by Federal, State, Territorial, and local government entities and non-profit organizations for qualified purposes;

(e) To make mineral materials available when it will not be detrimental to the public interest; and

(f) To protect public land resources and the environment and minimize damage to public health and safety during the authorized exploration for and the removal of such minerals.

§ 3601.8 Public availability of information.

(a) All data and information concerning Federal and Indian minerals that you submit under this part 3600 are subject to part 2 of this title. Part 2 of this title includes the regulations of the Department of the Interior covering the public disclosure of data and information contained in Department of the Interior records. Certain mineral information not protected from disclosure under part 2 of this title may be made available for inspection without a Freedom of Information Act (FOIA)(5 U.S.C. 552) request.

(b) When you submit data and information under this part 3600 that you believe to be exempt from disclosure to the public, you must clearly mark each page that you believe includes confidential information. BLM will keep all data and information confidential to the extent allowed by § 2.13(c) of this title.

§ 3601.9 Information collection.

The information collection requirements contained in part 3600 have been approved by the Office of Management and Budget under 44 U.S.C. 3501 *et seq.* and assigned clearance number 1004–0103. BLM is collecting the information to allow us to determine if you are qualified to purchase or have free use of mineral materials on the public lands. You must respond to obtain a benefit.

Limitations on Disposal of Mineral Materials

§ 3601.10 Limitations on BLM's discretion to dispose of mineral materials.

§ 3601.11 When will environmental considerations prevent BLM from disposing of mineral materials?

BLM will not dispose of mineral materials if we determine that the aggregate damage to public lands and resources would exceed the public benefits that BLM expects to be derived from the proposed disposition.

§ 3601.12 What areas does BLM exclude from disposal of mineral materials?

BLM will not dispose of mineral materials from wilderness areas or other areas where it is expressly prohibited by law. This includes national parks and monuments. We also will not dispose of mineral materials from Indian lands and lands set aside or held for the use or benefit of Indians.

§ 3601.13 How can I obtain mineral materials from Federal lands managed by other agencies?

If you wish to obtain mineral materials from lands managed by other Federal agencies or by State or local governments, you should apply to the appropriate representative of that agency. That office will either consent to or deny your application or suggest an alternative source. If the other agency consents to the disposal, it may instruct BLM to initiate the disposal under the regulations in this part, or conduct the disposal itself.

§ 3601.14 When can BLM dispose of mineral materials from unpatented mining claims?

BLM has authority to dispose of mineral materials from unpatented mining claims if disposal does not endanger or materially interfere with prospecting, mining, or processing operations, or uses reasonably incident thereto. BLM will ask a claimant for a waiver before disposing of mineral materials from a claim. If the claimant refuses to sign a waiver, BLM will make sure that disposal will not be detrimental to the public interest and consult with the Solicitor's Office, if necessary, before proceeding with the disposal.

Rights of Purchasers and Permittees

§ 3601.20 Rights of parties.

§ 3601.21 What rights does a person acquire under a materials sales contract or use permit?

(a) If you are a purchaser under a contract of sale or a permittee with a permit for free use, unless otherwise provided, you have the right to:

(1) Extract, remove, process, and stockpile the material until the contract or permit terminates, regardless of any rights others acquire later under the provisions of the general land laws; and

(2) Use and occupy the described lands to the extent necessary for fulfillment of the contract or permit.

(b) Users of the lands covered by your materials sales contract or free use permit who acquire their rights later than you will be subject to your existing use authorization. This applies to uses due to any later settlement, location, lease, sale, or other appropriation under the general land laws, including the mineral leasing and mining laws.

§ 3601.22 What rights remain with the United States when BLM sells or issues a permit for mineral materials?

Your sale contract or use permit is subject to the continuing right of the United States to issue leases, permits, and licenses for the use and occupancy of the lands, if this authorized use does not endanger or materially interfere with the production or removal of materials under contract or permit.

Pre-Application Sampling and Testing

§ 3601.30 Pre-application activities—how and when may I sample and test mineral materials?

(a) You may sample and test mineral materials under a letter of authorization from BLM. The letter of authorization expires after 90 days, but may be extended for an additional 90 days if you show BLM that an extension is necessary. BLM may authorize these activities before issuing a sales contract or free use permit.

(b) You must submit your sampling and testing findings to BLM. All information you submit under this section is subject to part 2 of this title, which sets forth the rules of the Department of the Interior relating to public availability of information contained in Departmental records, as provided in § 3601.8 of this part.

(c) A letter from BLM authorizing you to sample and test mineral materials does not give you a preference right to a sales contract or free use permit.

(d) BLM may impose bonding and reclamation requirements on sampling

and testing activities that you conduct under a letter of authorization.

Mining and Reclamation Plans

§ 3601.40 Mining and reclamation plans.

BLM may require you to submit mining and reclamation plans before we begin any environmental review or issue a contract or permit. You may combine these plans in one document.

§ 3601.41 What information must I include in my mining plan?

Your mining plan must include:

(a) A map, sketch, or aerial photograph identifying the area for which you are applying, the area you plan to disturb, existing and proposed access, and the names and locations of major topographic and known cultural features;

(b) A description of your proposed methods of operation and the periods during which you will operate;

(c) A description of measures you will take to prevent hazards to public health and safety and to minimize and mitigate environmental damage; and

(d) Such other information as BLM may require.

§ 3601.42 What information must I include in my reclamation plan?

Your reclamation plan must include:

(a) A statement of the proposed manner and time in which you will complete reclamation of the areas disturbed by your operations;

(b) A map or sketch which delineates the area you will reclaim; and

(c) Such other information as BLM may require.

§ 3601.43 How will I know when BLM approves my mining and reclamation plans?

(a) After reviewing your mining and reclamation plans, BLM will notify you of any deficiencies in the plans and recommend the changes necessary. BLM will notify you when we approve your plan. Approved mining and reclamation plans are a part of the contract or permit.

(b) Your operation must not deviate from the plan BLM approves, unless it is modified under § 3601.44.

§ 3601.44 How and when may my mining or reclamation plan be modified?

(a) Either you or BLM may initiate a modification of an approved mining or reclamation plan to adjust for changed conditions or to correct any oversight. If BLM notifies you that you must modify your plan, you will have 30 days to prepare the modification or explain why you need more time. If you fail to modify your plan to BLM's satisfaction, BLM may order you to stop all operations under your contract or permit.

(b) When you ask to change an approved mining or reclamation plan, BLM will review the proposed modification and within 30 days will notify you of approval, any needed changes, or denial.

Contract and Permit Administration

§ 3601.50 Administration of sales contracts and free use permits.

§ 3601.51 How will BLM inspect my operation?

You must allow BLM access at any reasonable time:

(a) To inspect or investigate the mine condition;

(b) To conduct surveys;

(c) To estimate the volume, types, and composition of commodities mined or removed; and

(d) To determine whether you comply with established requirements.

§ 3601.52 After I finish my operations, when must I remove improvements and equipment?

After your contract or permit period expires, or after cancellation of your permit or contract, BLM may grant you up to 90 days, excluding periods of inclement weather, to remove the equipment, personal property, and any other improvements that you placed on the public lands. You may leave in place improvements such as roads, culverts, and bridges if BLM consents. If you fail to remove such equipment, personal property, or other improvement, it will become the property of the United States, but you will remain liable for the cost of its removal and for restoration of the site.

Contract and Permit Cancellation

§ 3601.60 Cancellation.

§ 3601.61 When may BLM cancel my contract or permit?

BLM may cancel your contract or free use permit if you:

(a) Fail to comply with the provisions of the Materials Act of 1947, as amended (30 U.S.C. 601 *et seq.*);

(b) Fail to comply with any applicable regulations, including the inspection requirements of § 3601.51; or

(c) Default in the performance of any of the terms, covenants, or stipulations of the contract.

§ 3601.62 Cancellation procedure.

(a) BLM will give you written notice of any defaults, breach, or cause of forfeiture. You have 30 days after receipt of the notice:

(1) To correct all defaults;

(2) To request an extension of time in which to correct the defaults; or

(3) To submit evidence showing to the satisfaction of BLM why we should not cancel your contract or free use permit.

(b) If you fail to respond to the notice in one of the ways provided for in paragraph (a) of this section, BLM may cancel the contract or permit.

(c) If you are adversely affected by a cancellation, you may appeal under § 3601.80.

Unauthorized Use

§ 3601.70 Unauthorized use.

§ 3601.71 What constitutes unauthorized use?

You must not extract, sever, or remove mineral materials from public lands under the jurisdiction of the Department of the Interior, unless BLM or another Federal agency with jurisdiction authorizes the removal by sale or permit. Violation of this prohibition is unauthorized use.

§ 3601.72 What are the consequences of unauthorized use?

Unauthorized users are liable for damages to the United States, and are subject to prosecution for such unlawful acts (see subpart 9239 of this chapter).

Appeals

§ 3601.80 How do I appeal a final decision by BLM?

If a BLM decision adversely affects you, you may appeal the decision in accordance with parts 4 and 1840 of this title.

Subpart 3602—Mineral Materials Sales

Applications

§ 3602.10 Applying for a mineral materials sales contract.

§ 3602.11 How do I request a sale of mineral materials?

You may submit a written request for sale of mineral materials to the BLM office with jurisdiction over the site containing the materials. No particular form is required for this request. BLM may also initiate the sale without such a request.

§ 3602.12 How does the mineral materials sales process affect other users of public lands that are subject to a sale designation?

When BLM designates tracts for competitive or noncompetitive sale of mineral materials, and notes the designation in the public land records, it creates a right to remove the materials superior to any subsequent claim, entry, or other conflicting use of the land. This right attaches to all contracts and permits BLM authorizes within 2 years after the date we designate the tract.

BLM may extend this 2-year period for one additional year for good cause. This right does not prevent other uses or segregate the land from the operation of the public lands laws, including the mining and mineral leasing laws. However, such subsequent uses must not interfere with the extraction of mineral materials.

§ 3602.13 How does BLM measure and establish the price of mineral materials?

(a) BLM will not sell mineral materials at less than fair market value. BLM will determine fair market value by appraisal.

(b) BLM may periodically reappraise the value of mineral materials yet to be removed under a contract, and adjust the contract price accordingly. BLM will not adjust the price during the first 2 years of the contract. BLM also will not adjust the contract price during the 2-year period following any adjustment. However, BLM may adjust the price at the beginning of any contract renewal period.

(c) BLM measures mineral materials by in-place volume or weight equivalent. When BLM requires you to measure materials, you may use either of these methods, and BLM will verify your results.

§ 3602.14 What kind of financial security does BLM require?

(a) BLM will require, for contracts of $2,000 or more, a performance bond of:

(1) At least 5 percent of total contract value; plus,

(2) An amount large enough to meet the reclamation standards provided for in the contract, but at least $500. Where BLM makes contract sales from a community pit and you pay a reclamation fee as the purchaser, BLM will not require this portion of the performance bond.

(b) BLM may require a performance bond for contract sales of less than $2,000, but will not require a bond for more than 20 percent of the total contract value.

(c) A performance bond may be a:

(1) Bond of a corporate surety shown on the approved list issued by the U.S. Treasury Department;

(2) Certificate of deposit that:

(i) Is issued by a financial institution whose deposits are Federally insured;

(ii) Does not exceed the maximum insurable amount set by the Federal Deposit Insurance Corporation;

(iii) Is made payable or assigned to the United States;

(iv) Grants BLM authority to demand immediate payment if you fail to meet the terms and conditions of the contract;

(v) States that no party may redeem it before BLM approves its redemption; and (vi) Otherwise conforms to BLM's instructions as found in the contract terms;

(3) Cash bond, with a power of attorney to BLM to convert it upon the purchaser's failure to meet the terms and conditions of the contract; or

(4) Negotiable Treasury bond of the United States of a par value equal to the amount of the required bond, together with a power of attorney to BLM to sell it upon the purchaser's failure to meet the terms and conditions of the contract.

§ 3602.15 What will happen to my bond if I transferred all of my interests or operations to another bonded party?

BLM will cancel your bond obligations following approval of the transfer of your interests or operations if the party to whom you transferred provides a bond that assumes all of your existing liabilities.

Administration of Sales

§ 3602.20 Administration of mineral materials sales.

§ 3602.21 What payment terms apply to my mineral materials sales contract?

(a) Under a contract of sale for mineral materials—

(1) For contract sales of $2,000 or less, you must pay the full amount before BLM will sign the contract.

(2) When the sale exceeds $2,000, you may make installment payments. The first installment payment must be the greater of $500 or 5 percent of the total purchase price. If you elect to make installment payments—

(i) For non-competitive sales, you must pay the first installment at or before the time the contract is awarded;

(ii) For competitive sales, you must pay the first installment as a deposit at the time the bid is submitted; and

(iii) For noncompetitive or competitive sales, once you have removed materials, you must make each subsequent installment payment monthly in an amount equal to the value of the minerals removed; however, you must pay the balance of the purchase price not later than 60 days before the expiration date of the contract. BLM will credit your first installment payment to you at the time of your final payment.

(3) You must annually produce an amount sufficient to pay to the United States a sum of money equal to the first installment, or in lieu of such production, you must make an annual payment in the amount of the first installment. If you make production payments that are less than the first installment, your annual ''in lieu'' payment must be the difference between the production payments and the amount of the first installment. These annual payments are due on or before the anniversary date of the contract.

(b) If you fail to make the required payments under the terms and conditions of the contract and BLM cancels your contract under § 3601.61, you will forfeit all moneys that you paid.

§ 3602.22 When will a contract terminate?

(a) Your contract will terminate when—

(1) Its term expires; or

(2) BLM cancels your contract under § 3601.60 *et seq.* of this part.

(b) You and BLM may, by agreement, terminate the sales contract at any time.

§ 3602.23 When will BLM make refunds or allow credits?

(a) BLM may make refunds or allow credits if—

(1) Upon expiration of the contract your total payments exceed the total value of mineral materials covered by the contract;

(2) BLM determines that insufficient mineral materials existed in the sales area to fulfill the terms of the contract; or

(3) Materials paid for are unavailable as a result of termination of a contract by mutual agreement under § 3602.22(b) of this part.

(b) BLM will reduce the amount of the refund by the amount of the administrative cost of processing the disposal action. If these administrative costs exceed your total payments, BLM will not make a refund or allow a credit.

(c) BLM may credit to future production, but not refund, payments that you make in lieu of production under § 3602.21(a)(3). However, if, upon expiration of the contract, the total value of payments you have made exceeds the total value of mineral materials covered by your contract, BLM will refund the difference in accordance with paragraphs (a) and (b) of this section.

§ 3602.24 When may I assign my materials sales contract?

(a) You may not assign the contract or any interest therein unless BLM approves the transfer in writing.

(b) BLM will not approve your proposed assignment of contract, unless—

(1) Your assignee—

(i) Furnishes a performance bond as required by § 3602.14 of this part; or

(ii) Obtains a written commitment from the previous surety to be bound by the assignment when BLM approves it; and

(2) The assignment contains all terms and conditions agreed upon in your contract.

§ 3602.25 What rights and responsibilities does my assignee assume?

When BLM approves your assignment, your assignee will be entitled to all the rights and be subject to all the obligations under the contract.

§ 3602.26 If I assign my contract, when do my obligations under the contract end?

When BLM approves your assignment, you are released from any further liability under the contract for actions the assignee may take after the effective date of the assignment. You continue to be responsible for obligations, such as reclamation, that accrued before the approval date, whether or not you knew of them at the time of the transfer.

§ 3602.27 When will BLM extend the term of a contract?

BLM may grant a one-time extension of the contract not to exceed 1 year, if:

(a)(1) For contracts with terms over 90 days, BLM receives your written request between 30 and 90 days before the expiration of the contract; or

(2) For contracts with terms of 90 days or less, BLM receives your written request not later than 15 days before the expiration of the contract; and

(b) You show in writing that the delay in removal of the mineral materials was due to causes beyond your control and without fault or negligence on your part.

§ 3602.28 What records must I maintain and how long must I keep them?

(a) BLM may, as necessary, require you to maintain and preserve for 6 years records, maps, and surveys relating to production verification and valuation. These include, but are not limited to, detailed records of quantity, types, and value of commodities you moved, processed, sold, delivered, or used.

(b) You must make such records available to BLM to allow us to determine whether you have complied with statutes, regulations, and the terms of the contract.

§ 3602.29 How will BLM verify my production?

(a) You must submit an annual report of the amount of mineral materials you have mined or removed under your contract of sale, so BLM can verify that you have made the required payments. BLM may require more frequent reporting.

(b) BLM may require you to conduct pre-operation, annual, and post-operation volumetric surveys of the mine site.

Noncompetitive Sales

§ 3602.30 Noncompetitive sales.

In addition to the following sections, §§ 3602.31 through 3602.35, the provisions of §§ 3602.11 through 3602.29 of this part also apply to competitive sales.

§ 3602.31 What volume limitations generally apply to noncompetitive mineral materials sales?

(a) BLM may sell, at not less than fair market value, and without advertising or calling for bids, mineral materials not greater than 200,000 cubic yards (or weight equivalent) in any individual sale, when BLM determines it to be:

(1) In the public interest; and

(2) Impracticable to obtain competition.

(b) BLM will not approve noncompetitive sales that exceed a total aggregate of 200,000 cubic yards (or weight equivalent) made in any one State for the benefit of any one purchaser, whether an individual, partnership, corporation, or other entity, in any period of 12 consecutive months.

(c) The volume limitations in paragraphs (a) and (b) of this section do not apply to sales in the State of Alaska that BLM determines are needed for construction, operation, maintenance, or termination of the Trans-Alaska Pipeline System or the Alaska Natural Gas Transportation System.

(d) The volume limitations in paragraphs (a) and (b) of this section do not apply if:

(1) The Director determines that circumstances make it impossible to obtain competition; or

(2) There is insufficient time to invite competitive bids, because of an emergency situation affecting public property, health, or safety.

§ 3602.32 What volume and other limitations pertain to noncompetitive sales associated with public works projects?

BLM may sell mineral materials not exceeding 400,000 cubic yards (or weight equivalent), at not less than fair market value, without advertising or calling for bids if:

(a) BLM determines the sale to be in the public interest; and

(b) The materials will be used in connection with an urgent public works improvement program on behalf of a Federal, State, or local governmental agency, and time does not permit advertising for a competitive sale.

§ 3602.33 How will BLM dispose of mineral materials for use in developing Federal mineral leases?

(a) If you propose to use mineral materials in connection with developing a mineral lease issued by BLM, we may, without calling for competitive bids, sell you at fair market value a volume of mineral materials not exceeding 200,000 cubic yards (or weight equivalent) in one State in any period of 12 consecutive months.

(b) BLM will not charge for mineral materials that you must move in order to extract minerals under a Federal lease, whether or not you use them for lease development, if the materials remain within the boundaries of the lease.

§ 3602.34 What is the term of a noncompetitive contract?

BLM will not issue a noncompetitive contract for the sale of mineral materials for a term exceeding 5 years, excluding any contract extension under § 3602.27 and any period for removal of equipment and improvements under § 3601.52.

Competitive Sales

§ 3602.40 Competitive sales.

In addition to the following sections, §§ 3602.41 through 3602.49, the provisions of §§ 3602.11 through 3602.29 of this part also apply to competitive sales.

§ 3602.41 When will BLM sell mineral materials on a competitive basis?

Except for sales from community pits and common use areas under subpart 3603, and noncompetitive sales under § 3602.30 *et seq.*, BLM will make sales only after inviting competitive bids through publication and posting under § 3602.42.

§ 3602.42 How does BLM publicize competitive mineral materials sales?

(a) When offering mineral materials for sale by competitive bidding, BLM:

(1) Will advertise the sale by publishing a notice in a newspaper of general circulation in the area where the material is located, on the same day once a week for 2 consecutive weeks;

(2) May extend, at BLM's discretion, the period of time for advertising; and

(3) Will post a notice of sale in a conspicuous place in the office where you will submit bids.

(b) In the advertisement of sale, BLM will state:

(1) The location by legal description of the tract or tracts on which we are offering the materials;

(2) The kind of materials we are offering;

(3) The estimated quantities of materials we are offering;

(4) The unit of measurement;

(5) The appraised prices;

(6) The time and place for receiving and opening of bids;

(7) The minimum deposit we require;

(8) The site access that will be available to the purchaser;

(9) The method of bidding;

(10) That the purchaser must file mining and reclamation plans and that we require reclamation, if applicable;

(11) The bonding requirement;

(12) The location for inspection of contract terms and proposed stipulations;

(13) The office where you may obtain additional information;

(14) Whether the contract will be renewable; and

(15) Any additional information that BLM deems necessary.

(c) BLM will not hold sales sooner than one week after the last advertisement inviting competitive bids.

§ 3602.43 How does BLM conduct competitive mineral materials sales?

(a) To bid at a competitive sale you must submit a written sealed bid, make oral bids, or do both as BLM directs in the sale notice. If 2 or more persons make identical high sealed bids, BLM will determine the highest bid by holding an oral auction among the persons making the high bids. If no oral bid is made higher than the sealed bids, BLM will pick the successful bidder by lot. If you are the high bidder at an oral auction, you must confirm that bid in writing immediately after BLM announces the high bid.

(b) When BLM determines that it is in the public interest to do so, we may reject any or all bids, or may waive minor deficiencies in the bids that would not ordinarily affect the outcome of the bidding.

§ 3602.44 How do I make a bid deposit?

(a) If you wish to make a bid to purchase mineral materials, you must submit a deposit in advance of the sale.

(1) Your sealed bids must contain a deposit.

(2) At an oral auction, you must make your deposit before the opening of the bidding.

(b) Your deposit must be the greater of $500 or 10 percent of the appraised value as specified in the sale advertisement.

(c) Your deposit may be in the form of cash, a money order, a bank draft, or a cashier's or certified check made payable to the Bureau of Land Management.

(d) If you are not the successful bidder, BLM will return your bid deposit when the bidding concludes.

(e) If you are the successful bidder, BLM will apply your deposit to the purchase price.

§ 3602.45 What conditions must I meet before BLM will issue me a contract?

(a) BLM may require you to furnish information we find necessary to determine whether you are able to meet the obligations of the contract. We will award the contract to you if you made the highest bid, unless we determine that you are unable to meet the obligations of the contract, or you are unwilling to accept the terms of the contract, or BLM rejects all bids.

(b) If BLM determines that you are unable to meet the obligations of the contract, we will refund your deposit. If BLM awards you the contract, you must, within 60 days after receiving it, sign and return the contract, together with a performance bond and mining and reclamation plan when BLM requires them. BLM may extend this period an additional 30 days if you request it in writing within the first 60-day period. If you fail to sign and return the contract within the first 60-day period, or an approved 30-day extension period, you will forfeit the bid deposit. If BLM determines that you are unable to meet the obligations of the contract or if you fail to sign and return the contract within the time period specified, BLM may then offer and award the contract for the amount of the high bid to the person making the next highest complete bid who is qualified and willing to accept the contract, when that person redeposits the amount required under § 3602.44(b).

(c) BLM will make all sales on BLM standard contract forms approved by the Office of Management and Budget. We may include additional provisions and stipulations in the contract.

§ 3602.46 What is the term of a competitive contract?

BLM will not issue a competitive contract for the sale of mineral materials for a term exceeding 10 years. However, the 10-year period does not include any contract extension under § 3602.27, any contract renewal under § 3602.47, and any periods for removal of equipment and improvements under § 3601.52 of this part.

§ 3602.47 When and how may I renew my competitive contract?

(a) *Applying for competitive contract renewal.* When you have paid the United States the full contract price for the mineral materials you have purchased, you may apply for renewal of the contract in order to purchase and extract additional material that may be available at the contract site. You must submit your request for renewal of the contract at least 90 days before its expiration date. You do not need to use a specific form.

(b) *BLM's response to the application.* BLM will renew your contract if—

(1) You meet all the requirements of this section;

(2) Your contract is not limited under § 3602.49; and

(3) BLM determines that you are able to fulfill the obligations of a new contract.

(c) *Renewal term.* BLM will renew your contract for a maximum term of 10 additional years. The renewal may be for less than 10 years if you do not request that much time, or if BLM finds that the quantity of material involved does not justify a 10-year term.

(d) *Number of times a contract may be renewed.* There is no maximum number of times you may apply for renewal.

§ 3602.48 What may BLM require when renewing my contract?

(a) *Reappraisal.* BLM will not grant a renewal without requiring a reappraisal under § 3602.13.

(b) *Bond amount and terms.* Before renewing your contract, BLM may require you to increase, or allow you to decrease, the amount of the performance bond you posted under § 3602.14. BLM may also require other bond modifications to ensure coverage for the renewed contract.

(c) *Environmental protection requirements.* Before renewing your contract, BLM will perform additional environmental analysis as required, and may require you to adopt additional measures to prevent hazards to public health and safety, and to minimize and mitigate environmental damage.

(d) *Other requirements.* BLM may require additions or changes to other terms or conditions of your contract.

§ 3602.49 When will BLM issue a non-renewable contract?

(a) BLM may restrict your contract to a single term or otherwise limit its duration. This restriction will be based on a finding that—

(1) The land should be used for another, possibly conflicting, purpose after mineral materials are removed;

(2) The deposit of mineral materials may be appropriate for future use by multiple operators or by the local community; or

(3) Other circumstances make renewal inappropriate.

(b) If a contract is to be limited under this section, the notice of sale under § 3602.42 will include this information.

(c) If your contract is in existence on [*insert date 30 days after publication of final rule*], BLM will decide whether that contract is renewable upon your

request not later than 90 days before the expiration of the contract.

Subpart 3603—Community Pits and Common Use Areas

Disposal of Materials—Community Pits and Common Use Areas

§ 3603.10 Disposal of mineral materials from community pits and common use areas.

(a) BLM may make mineral material sales and allow free use under permit from the same deposit within areas that we designate for this purpose. These kinds of disposals must be consistent with other provisions of this part. These designated community pit sites or common use areas are not limited in size.

(b) This subpart applies to both sales and free use from community pits and common use areas unless otherwise stated. Refer to subpart 3604 for additional regulations applicable to the free use of mineral materials.

§ 3603.11 What rights pertain to users of community pits?

BLM's designation of a community pit site, when noted on the appropriate BLM records or posted on the ground, establishes a right to remove the materials superior to any subsequent claim or entry of the lands.

§ 3603.12 What rights pertain to users of common use areas?

(a) BLM's designation of a common use area does not establish a right to remove the materials superior to any subsequent claim or entry of the lands.

(b) Once you have a permit or a sales contract to remove mineral materials from a common use area, your rights under that permit or contract are superior to any subsequent claim or entry on the lands.

§ 3603.13 What price does BLM charge under materials sales contracts for mineral materials from community pits and common use areas?

BLM will sell mineral materials from community pits or common use areas under materials sales contracts for not less than fair market value.

§ 3603.14 What plans do I need to prepare to mine or remove mineral materials from a community pit or common use area?

BLM will not require a mining or reclamation plan before you mine or remove mineral materials from a community pit or common use area, but you must comply with the terms of the contract or permit to protect health, safety, and the environment.

Reclamation

§ 3603.20 Reclamation.

§ 3603.21 What reclamation requirements pertain to community pits and common use areas?

You do not generally need to perform reclamation after extracting mineral materials from community pits or common use areas under permits or sale contracts. However, you must pay a reclamation fee as provided in § 3603.22.

§ 3603.22 What fees must I pay to cover the cost of reclamation of community pits and common use areas?

(a) You must pay a reclamation fee based on the amount of mineral materials you extract from the community pit or common use area, unless you make an alternative arrangement under paragraph (b) of this section. The reclamation fee will be a proportionate share of the total estimated cost of reclamation, determined by using the ratio of the material that you extract under your permit or contract to the total volume of the material BLM estimates will be extracted from the site.

(b) BLM may, at our discretion, allow purchasers and permittees to perform interim or final reclamation, where needed, in lieu of paying reclamation charges.

Subpart 3604—Free Use of Mineral Materials

Obtaining Free Use Permits

§ 3604.10 Permits for free use of mineral materials.

§ 3604.11 How do I apply for a free use permit?

If you wish to apply for free use of mineral materials, you must file your application with BLM on a BLM standard form approved by the Office of Management and Budget.

§ 3604.12 Who may obtain a free use permit?

Any Federal, State, or territorial agency, unit, or subdivision, including municipalities, or any non-profit organization, may apply for a free use permit to extract and use mineral materials.

(a) BLM may issue free use permits to you as a government entity without limitation as to the number of permits or as to the value of the mineral materials to be extracted or removed, provided that you show that these materials will not be used for commercial or industrial purposes.

(b) BLM may issue free use permits to you as a non-profit organization for not more than 5,000 cubic yards (or weight equivalent) in any period of 12 consecutive months, provided that you show that these materials will not be used for commercial or industrial purposes.

§ 3604.13 When will BLM decline to issue a free use permit to a qualified applicant?

BLM will not issue a free use permit if we determine that you own or control an adequate supply of suitable mineral materials that:

(a) Are readily available, and

(b) Can be mined in a manner that is economically and environmentally acceptable.

Administration of Free Use

§ 3604.20 Administration of free use permits.

§ 3604.21 What is the term of a free use permit?

(a) BLM will determine the appropriate length of your free use permit term.

(1) BLM will not grant free use permits to government entities for terms exceeding 10 years.

(2) BLM will not grant free use permits to non-profit organizations for terms exceeding one year.

(b) BLM may extend any free use permit term for a single additional period not to exceed one year.

§ 3604.22 What conditions and restrictions pertain to my free use permit?

(a) You must not barter or sell mineral materials that you obtain under a free use permit.

(b) You must not remove mineral materials before BLM issues you a permit or after your permit has expired.

(c) BLM may incorporate other conditions and restrictions into your free use permit.

§ 3604.23 When and how may I assign my free use permit?

You may assign or transfer your free use permit to entities qualified under § 3604.12. You must first obtain the written approval of BLM.

§ 3604.24 Who may remove materials on my behalf?

(a) You may allow your agent to extract mineral materials under your free use permit.

(b) Your agent may charge you only for extraction services and must not—

(1) Charge you for the materials extracted, processed, or removed; or

(2) Take mineral materials from the permit area as payment for services rendered to you, or as a donation or gift.

§ 3604.25 What bond requirements pertain to free use permits?

BLM may require a bond as a guarantee of your faithful performance of the provisions of your permit and applicable regulations, including required reclamation. Your bond may be in any type of security provided for in § 3602.14(c) of this part.

§ 3604.26 When will BLM cancel my permit?

BLM may cancel your permit if you fail, after adequate notice, to follow its terms and conditions.

§ 3604.27 What rights does a free use permit give me against other users of the land?

Permits that BLM issues under this subpart constitute a superior right to remove the materials in accordance with the permit terms and provisions, as against any subsequent claim to or entry of the lands.

PART 3610 [REMOVED]

2. Part 3610 is removed.

PART 3620—FREE USE OF PETRIFIED WOOD

3. The authority citation for part 3620 is revised to read as follows:

Authority: 30 U.S.C. 601 *et seq.*; 43 U.S.C. 1201, 1732, 1733, 1740; sec. 2, Act of September 28, 1962 (Pub. L. 87–713, 76 Stat. 652).

4. The heading of Part 3620 is revised to read as set forth above.

Subpart 3621 [Removed]

5. Subpart 3621 is removed.

Subpart 3622—Free Use of Petrified Wood

6. Section 3622.1 is amended by revising paragraph (b) to read as follows:

§ 3622.1 Program: General.

* * * * *

(b) The purchase of petrified wood for commercial purposes is provided for in § 3602.10 *et seq.* of this chapter.

§ 3622.2 [Amended]

7. Section 3622.2 is amended by removing the phrase ''subpart 3621 of this title'' from the second sentence and adding in its place the phrase ''subpart 3604 of this chapter.''

§ 3622.4 [Amended]

8. Section 3622.4 is amended by:

a. Removing the phrase ''subpart 3621 of this title'' from paragraph (a)(2) and adding in its place the phrase ''subpart 3604 of this chapter,''

b. Removing the phrase ''unnecessary and undue degradation of lands'' from paragraph (a)(4) and adding in its place the phrase ''hazards to public health and safety, and minimizes and mitigates environmental damage.''

c. Removing the phrase ''in § 3622.4(a) of this title'' at the end of paragraph (b), and adding in its place the phrase ''in paragraph (a) of this section.''

[FR Doc. 00–23590 Filed 9–13–00; 8:45 am]

BILLING CODE 4310–84–P

Federal Register

Thursday,
September 14, 2000

Part VIII

The President

Presidential Determination No. 2000–29 of September 12, 2000—Continuation of the Exercise of Certain Authorities Under the Trading With the Enemy Act

Federal Register
Vol. 65, No. 179
Thursday, September 14, 2000

Presidential Documents

Title 3—

The President

Presidential Determination No. 2000–29 of September 12, 2000

Continuation of the Exercise of Certain Authorities Under the Trading With the Enemy Act

Memorandum for the Secretary of State [and] the Secretary of the Treasury

Under section 101(b) of Public Law 95–223 (91 Stat. 1625; 50 U.S.C. App. 5(b) note), and a previous determination made by me on September 10, 1999 (64 *Fed. Reg.* 51885), the exercise of certain authorities under the Trading With the Enemy Act is scheduled to terminate on September 14, 2000.

I hereby determine that the continuation for 1 year of the exercise of those authorities with respect to the applicable countries is in the national interest of the United States.

Therefore, pursuant to the authority vested in me by section 101(b) of Public Law 95–223, I continue for 1 year, until September 14, 2001, the exercise of those authorities with respect to countries affected by:

(1) the Foreign Assets Control Regulations, 31 CFR part 500;

(2) the Transaction Control Regulations, 31 CFR part 505; and

(3) the Cuban Assets Control Regulations, 31 CFR part 515.

The Secretary of the Treasury is authorized and directed to publish this determination in the **Federal Register**.

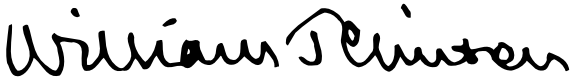

THE WHITE HOUSE,
Washington, September 12, 2000.

[FR Doc. 00–23825
Filed 9–13–00; 8:45 am]
Billing code 4810–31–M

Reader Aids

Federal Register

Vol. 65, No. 179

Thursday, September 14, 2000

CUSTOMER SERVICE AND INFORMATION

Federal Register/Code of Federal Regulations

General Information, indexes and other finding aids	**202–523–5227**
Laws	**523–5227**
Presidential Documents	
Executive orders and proclamations	**523–5227**
The United States Government Manual	**523–5227**
Other Services	
Electronic and on-line services (voice)	**523–4534**
Privacy Act Compilation	**523–3187**
Public Laws Update Service (numbers, dates, etc.)	**523–6641**
TTY for the deaf-and-hard-of-hearing	**523–5229**

ELECTRONIC RESEARCH

World Wide Web

Full text of the daily Federal Register, CFR and other publications:

http://www.access.gpo.gov/nara

Federal Register information and research tools, including Public Inspection List, indexes, and links to GPO Access:

http://www.nara.gov/fedreg

E-mail

PENS (Public Law Electronic Notification Service) is an E-mail service for notification of recently enacted Public Laws. To subscribe, send E-mail to

listserv@www.gsa.gov

with the text message:

subscribe PUBLAWS-L your name

Use listserv@www.gsa.gov only to subscribe or unsubscribe to PENS. We cannot respond to specific inquiries.

Reference questions. Send questions and comments about the Federal Register system to:

info@fedreg.nara.gov

The Federal Register staff cannot interpret specific documents or regulations.

FEDERAL REGISTER PAGES AND DATE, SEPTEMBER

53157–53522 1
53523–53888 5
53889–54138 6
54139–54396 7
54397–54740 8
54741–54942 11
54943–55168 12
55169–55430 13
55431–55884 14

CFR PARTS AFFECTED DURING SEPTEMBER

At the end of each month, the Office of the Federal Register publishes separately a List of CFR Sections Affected (LSA), which lists parts and sections affected by documents published since the revision date of each title.

3 CFR

Administrative Orders:

Presidential Determinations:

Presidential Determination No. 99–36 of September 10, 1999 (see Presidential Determination No. 2000–29 of September 12, 2000) No. 00–29 of September 12, 2000

Proclamations:

7336 53887
7337 54397

Executive Orders:

5327 (Revoked in part by PLO 7461) 54297

5 CFR

532 55431
2635 55076

Proposed Rules:

2635 53650
2640 53942

7 CFR

246 53523
301 .....53528, 54139, 54741, 54943, 55431
920 54945
927 53531
929 55436
944 54945
1735 54399

Proposed Rules:

226 55102
932 54818
983 53652
1940 55784
1945 54973

8 CFR

204 53889
245 53889

9 CFR

318 53531
381 53531

Proposed Rules:

206 53653

10 CFR

1 54948
2 54948
19 54948
30 54948
40 54948
50 54948
51 54948
70 54948
72 53533

12 CFR

612 54742
614 54742
702 55439
709 55439
1710 55169

Proposed Rules:

741 55464

13 CFR

121 53533

14 CFR

23 55848
25 .....55443, 55848
33 55848
39 .....53157, 53158, 53161, 53897, 54140, 54143, 54145, 54403, 54407, 54409, 54743, 55175, 55449, 55450, 55452, 55453, 55457
71 .....53558, 54950, 54952, 54953, 55076
95 54744
97 55458

Proposed Rules:

39 .....53199, 53201, 53203, 53205, 53206, 54182, 54184, 54445, 54820, 54823, 54981, 55466, 55468, 55470
71 .....54824, 54825

15 CFR

738 55177
742 55177
746 55177
774 55177

16 CFR

305 .....53163, 53165
1000 53167

Proposed Rules:

313 54186
436 53946

17 CFR

146 53559
200 55180
240 53560

Proposed Rules:

30 53946
210 54189
240 54189

19 CFR

10 53565
12 53565
18 53565
24 53565

111 53565
113 53565
114 53565
125 53565
134 53565
145 53565
162 53565
171 53565
172 53565

20 CFR

404 54747
416 54747

21 CFR

101 54686
510 ....54147, 55460
520 53581
573 53167
558 ....53581, 53582, 53583, 54147, 54410, 54411

22 CFR

22 54148
40 54412
42 54412
203 54790

24 CFR

5 55134
401 53899
903 55134
982 55134

25 CFR

Proposed Rules:
103 53948
292 55471

26 CFR

1 ....53584, 53901
25 53587
602 53584

28 CFR

Proposed Rules:
16 53679

30 CFR

218 55187
917 53909
931 54791
Proposed Rules:
218 55476
256 55476
260 55476
943 54982

31 CFR

202 55427
203 55428
225 55429
344 55400
380 55426

32 CFR

311 53168
701 53171
736 53589
762 53171
765 53171
770 53591
Proposed Rules:
326 53902
651 54348

33 CFR

100 54150
117 ....54795, 54954
162 53593
165 ....54152, 54153, 54795, 54797
167 53911

34 CFR

Proposed Rules:
303 53808

36 CFR

51 54155
242 55190
Proposed Rules:
7 53208
293 54190

37 CFR

1 54604
3 54604
5 54604
10 54604
Proposed Rules:
201 54984
256 54984
401 54826

38 CFR

8 54798
19 55461
21 55192

39 CFR

20 55462
Proposed Rules:
111 53212

40 CFR

9 55810
52 ....53172, 53180, 53181, 53595, 53599, 53602, 54413, 55193, 55196, 55201
62 53605
63 ....54419, 55810
80 ....53185, 54423
261 54955
Proposed Rules:
50 54828
52 ....53214, 53680, 53962, 54820, 55205
62 53680
63 ....55332, 55489, 55491
80 ....53215, 54447
81 54828
141 55362
146 53218
148 55684
261 55684
268 55684
271 55684
300 54190
302 55684
372 53681

41 CFR

Ch. 301 53470
101-16 54965
102-5 54965

42 CFR

36 53914
36a 53914
447 55076
457 55076
Proposed Rules:
405 53963
410 55078
414 55078

43 CFR

Proposed Rules:
3600 55864
3610 55864
3620 55864

44 CFR

Ch. I 53914
65 53915
67 53917
295 53914
Proposed Rules:
67 53964

45 CFR

2543 53608

46 CFR

Proposed Rules:
401 55206

47 CFR

1 ....53610, 54799
2 54155
11 ....53610, 54155
21 53610
24 53624
25 ....53610, 54155
51 54433
52 53189
64 54799
73 ....53610, 53638, 53639, 53640, 54176, 54804, 54805
74 ....53610, 54155
76 53610
78 54155
79 ....54176, 54805
90 53641
95 53190
100 53610
101 54155
Proposed Rules:
73 ....53690, 53973, 53974, 54192, 54832, 54833

48 CFR

209 54988
1828 54439
1845 54813
1852 ....54439, 54813
Proposed Rules:
2 54940
13 54936
22 54104
25 54936
31 54940
35 54940
52 ....54104, 54936
204 54985
442 54986

49 CFR

192 54441
195 54441
Proposed Rules:
23 54454
26 54454
565 53219
571 55212
1244 54471

50 CFR

17 54177
20 ....53190, 53492, 53936
100 55190
300 54969
600 53646
622 55203
635 54970
648 ....53648, 53940
660 ....53646, 53648, 54178, 54817
679 ....53197, 53198, 54179, 54180, 54971
Proposed Rules:
17 ....53222, 53691, 53974, 54472, 54892
600 54833
622 54474
648 54987
660 ....53692, 54475, 55214, 55495

REMINDERS

The items in this list were editorially compiled as an aid to Federal Register users. Inclusion or exclusion from this list has no legal significance.

RULES GOING INTO EFFECT SEPTEMBER 14, 2000

AGRICULTURE DEPARTMENT

Animal and Plant Health Inspection Service

Plant-related quarantine, domestic:

Plum pox—

Compensation; published 9-14-00

ENVIRONMENTAL PROTECTION AGENCY

Air programs; approval and promulgation; State plans for designated facilities and pollutants:

Hospital/medical/infectious waste incinerators constructed on or before June 20, 1996; Federal plan requirements; published 8-15-00

HEALTH AND HUMAN SERVICES DEPARTMENT

Food and Drug Administration

Animal drugs, feeds, and related products:

Sponsor name and address changes—

Veterinary Research Associates, Inc.; published 9-14-00

POSTAL SERVICE

International Mail Manual:

Global Direct; Canada publications mail; published 9-14-00

VETERANS AFFAIRS DEPARTMENT

Board of Veterans Appeals:

Appeals regulations and rules of practice; published 9-14-00

COMMENTS DUE NEXT WEEK

AGRICULTURE DEPARTMENT

Agricultural Marketing Service

Peanut promotion, research, and information order:

National Peanut Board; membership; comments due by 9-20-00; published 8-21-00

AGRICULTURE DEPARTMENT

Animal and Plant Health Inspection Service

Interstate transportation of animals and animal products (quarantine):

Land tortoises free of ticks carrying heartwater disease; comments due by 9-19-00; published 7-21-00

ARCHITECTURAL AND TRANSPORTATION BARRIERS COMPLIANCE BOARD

Americans with Disabilities Act; implementation:

Accessibility guidelines—

Recreation facilities; draft final guidelines summary availability and meetings; comments due by 9-19-00; published 7-21-00

COMMERCE DEPARTMENT

National Oceanic and Atmospheric Administration

Endangered and threatened species:

Sea turtle conservation; shrimp trawling requirements—

Galveston Bay, TX; inshore waters; limited tow times use as alternative to turtle excluder devices; comments due by 9-22-00; published 8-29-00

Fishery conservation and management:

Atlantic highly migratory species—

Atlantic blue marlin, billfish, and swordfish; comments due by 9-22-00; published 8-9-00

West Coast States and Western Pacific fisheries—

Pacific Coast groundfish; comments due by 9-22-00; published 9-7-00

COMMODITY FUTURES TRADING COMMISSION

Foreign futures and options transactions:

Secured amount requirement; interpretation; comments due by 9-21-00; published 9-6-00

DEFENSE DEPARTMENT

Acquisition regulations:

Profit policy changes; comments due by 9-22-00; published 7-24-00

EDUCATION DEPARTMENT

Postsecondary education:

Federal Perkins Loan, Federal Family Education Loan, and William D. Ford Federal Direct Loan Programs; comments due by 9-18-00; published 8-2-00

Student assistance general provisions and Federal Family Education Loan, William D. Ford Federal Direct Loan, and Federal Pell Grant Programs; comments due by 9-18-00; published 8-2-00

Special education and rehabilitative services:

Special Demonstration Programs; comments due by 9-21-00; published 6-23-00

ENVIRONMENTAL PROTECTION AGENCY

Air pollutants, hazardous; national emission standards:

Metal coil coating facilities; comments due by 9-18-00; published 7-18-00

Mobile source air toxics controls; comments due by 9-20-00; published 8-4-00

Air quality implementation plans; approval and promulgation; various States:

Massachusetts; comments due by 9-20-00; published 8-21-00

Hazardous waste:

Identification and listing—

Exclusions; comments due by 9-22-00; published 8-8-00

Fossil fuels combustion wastes; regulatory determination; comments due by 9-19-00; published 5-22-00

Land disposal restrictions—

Miscellaneous changes; comments due by 9-18-00; published 6-19-00

Pesticides; tolerances in food, animal feeds, and raw agricultural commodities:

Azoxystrobin, etc.; comments due by 9-18-00; published 7-19-00

Butyl acrylate-vinyl acetate-acrylic acid copolymer; comments due by 9-18-00; published 7-19-00

Humic acid, sodium salt; comments due by 9-18-00; published 7-18-00

Pendimethalin; comments due by 9-18-00; published 7-19-00

Tebuconazole; comments due by 9-18-00; published 7-18-00

Superfund program:

National oil and hazardous substances contingency plan—

National priorities list update; comments due by 9-18-00; published 8-17-00

National priorities list update; comments due by 9-18-00; published 8-17-00

Water supply:

National primary drinking water regulations—

Arsenic; maximum contaminant level; comments due by 9-20-00; published 6-22-00

FEDERAL COMMUNICATIONS COMMISSION

Digital television stations; table of assignments:

Alabama; comments due by 9-18-00; published 7-31-00

GENERAL SERVICES ADMINISTRATION

Acquisition regulations:

Energy-efficient office equipment and supplies containing recovered materials or other environmental attributes; identification; comments due by 9-18-00; published 7-18-00

HEALTH AND HUMAN SERVICES DEPARTMENT

Food and Drug Administration

Human drugs:

Labeling of drug products (OTC)—

Standardized format; compliance dates, partial extension; comments due by 9-18-00; published 6-20-00

INTERIOR DEPARTMENT

Land Management Bureau

Minerals management:

Leasing of solid minerals other than coal and oil shale; comments due by 9-18-00; published 8-18-00

INTERIOR DEPARTMENT

Fish and Wildlife Service

Endangered and threatened species:

Critial habitat designations—

Spalding's catchfly; comments due by 9-22-00; published 9-8-00

Critical habitat designations—

Mexican spotted owl; comments due by 9-19-00; published 7-21-00

Zapata bladderpod; comments due by 9-18-00; published 7-19-00

INTERIOR DEPARTMENT

Minerals Management Service

Outer Continental Shelf; oil, gas, and sulphur operations:

Restructuring oil and gas drilling requirements, and conversion of rule into plain language; comments due by 9-19-00; published 6-21-00

JUSTICE DEPARTMENT

Immigration and Naturalization Service

Nonimmigrant classes:

Temporary agricultural worker (H-2A) petitions; processing procedures; comments due by 9-18-00; published 8-17-00

LABOR DEPARTMENT

Employment and Training Administration

Aliens:

Nonimmigrant agricultural workers; temporary employment; labor certification and petition process; fee structure modification; comments due by 9-18-00; published 8-17-00

Temporary employment in U.S.—

Attestations by facilities employing H-1C nonimmigrant aliens as registered nurses; comments due by 9-21-00; published 8-22-00

NUCLEAR REGULATORY COMMISSION

Reports and guidance documents; availability, etc.:

Operator license eligibility and use of simulation facilities in operator licensing; comments due by 9-18-00; published 7-3-00

PENSION BENEFIT GUARANTY CORPORATION

Single-employer plans:

Allocation of assets—

Title IV aspects of cash balance plans with variable indices; comments due by 9-22-00; published 7-6-00

PERSONNEL MANAGEMENT OFFICE

Health benefits, Federal employees:

Health insurance premiums; pre-tax allotment; comments due by 9-18-00; published 7-19-00

Health benefits; Federal employees:

Health insurance; pre-tax premium conversion; comments due by 9-18-00; published 7-19-00

Prevailing rate systems; comments due by 9-18-00; published 8-17-00

SECURITIES AND EXCHANGE COMMISSION

Securities:

Firm quote and trade-through disclosure rules for options; comments due by 9-18-00; published 8-4-00

Order routing and execution practices; disclosure; comments due by 9-22-00; published 8-8-00

TRANSPORTATION DEPARTMENT

Computer reservation systems, carrier-owned

Internet use for airline distribution; comments due by 9-22-00; published 7-24-00

TRANSPORTATION DEPARTMENT

Federal Aviation Administration

Air carrier certification and operations:

Airports serving scheduled air carrier operations in aircraft with 10-30 seats; certification requirements; comments due by 9-19-00; published 6-21-00

Emergency medical equipment; comments due by 9-21-00; published 5-24-00

Hawaii; air tour operators; comments due by 9-22-00; published 8-23-00

Airworthiness directives:

Aerospatiale; comments due by 9-18-00; published 8-23-00

Airbus; comments due by 9-18-00; published 8-23-00

Bell; comments due by 9-18-00; published 7-20-00

Bombardier; comments due by 9-22-00; published 8-23-00

Cessna; comments due by 9-22-00; published 8-8-00

Dowty Aerospace Propellers; comments due by 9-20-00; published 8-21-00

Eurocopter France; comments due by 9-18-00; published 7-20-00

Fairchild; comments due by 9-22-00; published 8-3-00

General Electric Co.; comments due by 9-18-00; published 7-20-00

Learjet; comments due by 9-22-00; published 8-8-00

Pilatus Aircraft Ltd.; comments due by 9-22-00; published 8-18-00

Raytheon; comments due by 9-18-00; published 8-16-00

Saab; comments due by 9-20-00; published 8-21-00

Class E airspace; comments due by 9-18-00; published 7-25-00

TRANSPORTATION DEPARTMENT

Federal Highway Administration

Payment procedures:

Engineering and design related service contracts; administration; comments due by 9-18-00; published 7-18-00

VETERANS AFFAIRS DEPARTMENT

National and State cemeteries; interment or memorialization prohibition due to commission of capital crimes; comments due by 9-19-00; published 7-21-00

Servicemembers' and veterans' group life insurance:

Accelerated benefits option; comments due by 9-18-00; published 7-20-00

LIST OF PUBLIC LAWS

This is a continuing list of public bills from the current session of Congress which have become Federal laws. It may be used in conjunction with "P L U S" (Public Laws Update Service) on 202–523–6641. This list is also available online at http://www.nara.gov/fedreg.

The text of laws is not published in the **Federal Register** but may be ordered in "slip law" (individual pamphlet) form from the Superintendent of Documents, U.S. Government Printing Office, Washington, DC 20402 (phone, 202–512–1808). The text will also be made available on the Internet from GPO Access at http://www.access.gpo.gov/nara/index.html. Some laws may not yet be available.

H.R. 3519/P.L. 106–264

Global AIDS and Tuberculosis Relief Act of 2000 (Aug. 19, 2000; 114 Stat. 748)

Last List August 22, 2000

Public Laws Electronic Notification Service (PENS)

PENS is a free electronic mail notification service of newly enacted public laws. To subscribe, go to www.gsa.gov/archives/publaws-l.html or send E-mail to **listserv@www.gsa.gov** with the following text message:

SUBSCRIBE PUBLAWS-L Your Name.

Note: This service is strictly for E-mail notification of new laws. The text of laws is not available through this service. **PENS** cannot respond to specific inquiries sent to this address.