AUTHENTICATED
U.S. GOVERNMENT
INFORMATION
GPO

Federal Register

9–25–00 Monday
Vol. 65 No. 186 Sept. 25, 2000
Pages 57537–57722

The **FEDERAL REGISTER** is published daily, Monday through Friday, except official holidays, by the Office of the Federal Register, National Archives and Records Administration, Washington, DC 20408, under the Federal Register Act (44 U.S.C. Ch. 15) and the regulations of the Administrative Committee of the Federal Register (1 CFR Ch. I). The Superintendent of Documents, U.S. Government Printing Office, Washington, DC 20402 is the exclusive distributor of the official edition.

The **Federal Register** provides a uniform system for making available to the public regulations and legal notices issued by Federal agencies. These include Presidential proclamations and Executive Orders, Federal agency documents having general applicability and legal effect, documents required to be published by act of Congress, and other Federal agency documents of public interest.

Documents are on file for public inspection in the Office of the Federal Register the day before they are published, unless the issuing agency requests earlier filing. For a list of documents currently on file for public inspection, see http://www.nara.gov/fedreg.

The seal of the National Archives and Records Administration authenticates the Federal Register as the official serial publication established under the Federal Register Act. Under 44 U.S.C. 1507, the contents of the **Federal Register** shall be judicially noticed.

The **Federal Register** is published in paper and on 24x microfiche. It is also available online at no charge as one of the databases on GPO Access, a service of the U.S. Government Printing Office.

The online edition of the **Federal Register** is issued under the authority of the Administrative Committee of the Federal Register as the official legal equivalent of the paper and microfiche editions (44 U.S.C. 4101 and 1 CFR 5.10). It is updated by 6 a.m. each day the **Federal Register** is published and it includes both text and graphics from Volume 59, Number 1 (January 2, 1994) forward.

GPO Access users can choose to retrieve online **Federal Register** documents as TEXT (ASCII text, graphics omitted), PDF (Adobe Portable Document Format, including full text and all graphics), or SUMMARY (abbreviated text) files. Users should carefully check retrieved material to ensure that documents were properly downloaded.

On the World Wide Web, connect to the **Federal Register** at http://www.access.gpo.gov/nara. Those without World Wide Web access can also connect with a local WAIS client, by Telnet to swais.access.gpo.gov, or by dialing (202) 512-1661 with a computer and modem. When using Telnet or modem, type swais, then log in as guest with no password.

For more information about GPO Access, contact the GPO Access User Support Team by E-mail at gpoaccess@gpo.gov; by fax at (202) 512–1262; or call (202) 512–1530 or 1–888–293–6498 (toll free) between 7 a.m. and 5 p.m. Eastern time, Monday–Friday, except Federal holidays.

The annual subscription price for the **Federal Register** paper edition is $638, or $697 for a combined **Federal Register,** Federal Register Index and List of CFR Sections Affected (LSA) subscription; the microfiche edition of the **Federal Register** including the Federal Register Index and LSA is $253. Six month subscriptions are available for one-half the annual rate. The charge for individual copies in paper form is $9.00 for each issue, or $9.00 for each group of pages as actually bound; or $2.00 for each issue in microfiche form. All prices include regular domestic postage and handling. International customers please add 25% for foreign handling. Remit check or money order, made payable to the Superintendent of Documents, or charge to your GPO Deposit Account, VISA, MasterCard or Discover. Mail to: New Orders, Superintendent of Documents, P.O. Box 371954, Pittsburgh, PA 15250–7954.

There are no restrictions on the republication of material appearing in the **Federal Register.**

How To Cite This Publication: Use the volume number and the page number. Example: 65 FR 12345.

SUBSCRIPTIONS AND COPIES

PUBLIC	
Subscriptions:	
Paper or fiche	**202–512–1800**
Assistance with public subscriptions	**512–1806**
General online information	**202–512–1530; 1–888–293–6498**
Single copies/back copies:	
Paper or fiche	**512–1800**
Assistance with public single copies	**512–1803**
FEDERAL AGENCIES	
Subscriptions:	
Paper or fiche	**523–5243**
Assistance with Federal agency subscriptions	**523–5243**

Printed on recycled paper.

Contents

Federal Register

Vol. 65, No. 186

Monday, September 25, 2000

Agricultural Marketing Service
RULES
Oranges, grapefruit, tangerines, and tangelos grown in—
Florida, 57538–57541

Agriculture Department
See Agricultural Marketing Service
See Animal and Plant Health Inspection Service
See Federal Crop Insurance Corporation
See Forest Service
See Natural Resources Conservation Service
PROPOSED RULES
Import quotas and fees:
Sugar-containing products; tariff-rate quota licensing
Withdrawn, 57562
NOTICES
Agency information collection activities:
Submission for OMB review; comment request, 57589–57591

Alcohol, Tobacco and Firearms Bureau
RULES
Alcohol, tobacco, and other excise taxes:
Tobacco products—
Roll-your-own tobacco; manufacturer permit requirements, 57544–57548

Animal and Plant Health Inspection Service
RULES
Plant-related quarantine, domestic:
Melon fruit fly, 57537

Centers for Disease Control and Prevention
NOTICES
Agency information collection activities:
Proposed collection; comment request, 57610–57611
Submission for OMB review; comment request, 57611
Meetings:
Immunization Practices Advisory Committee, 57611–57612

Commerce Department
See National Oceanic and Atmospheric Administration

Defense Department
NOTICES
Agency information collection activities:
Proposed collection; comment request, 57594–57595

Drug Enforcement Administration
PROPOSED RULES
Records, reports, and exports of listed chemicals:
Red phosphorus, white phosphorus, and hypophosphorous acid (and its salts), 57577–57581
NOTICES
Schedules of controlled substances; production quotas:
Schedules I and II—
2000 aggregate, 57624–57626
Applications, hearings, determinations, etc.:
Abbott Laboratories, 57621
American Radiolabeled Chemical, Inc., 57621
Glaxo Wellcome Inc., 57621–57622
Lonza Riverside, 57622
Noramco, Inc., 57622–57623
Roche Diagnostics Corp., 57623
Sigma Aldrich Research Biochemicals, Inc., 57623–57624

Energy Department
See Federal Energy Regulatory Commission
NOTICES
Meetings:
Environmental Management Site-Specific Advisory Board—
Rocky Flats, CO, 57595

Environmental Protection Agency
RULES
Pesticides; tolerances in food, animal feeds, and raw agricultural commodities:
Mefenoxam, 57550–57557
PROPOSED RULES
Pesticide programs:
Ground water pesticide management rule; notification to Agriculture Secretary, 57585–57586
NOTICES
Agency information collection activities:
Submission for OMB review; comment request, 57603–57605
Water pollution control:
Clean Water Act—
Class II administrative penalty assessments, 57605–57606

Executive Office of the President
ADMINISTRATIVE ORDERS
Angola (UNITA), National Union for the Total Independence of; state of emergency (Notice of September 22, 2000), 57719–57721

Federal Aviation Administration
RULES
Class E airspace, 57542–57544
PROPOSED RULES
Airworthiness standards:
Special conditions—
Boeing Model 777-200 series airplanes, 57564–57567
Class D airspace, 57567–57568
Class E airspace, 57568–57577
NOTICES
Passenger facility charges; applications, etc.:
Wilkes-Barre/Scranton International Airport, PA, 57642–57643

Federal Communications Commission
RULES
Radio frequency devices:
Frequency hopping spread spectrum systems operating in 2.4 GHz band for wider operational bandwidths, 57557–57561
NOTICES
Agency information collection activities:
Proposed collection; comment request, 57606–57607

Federal Crop Insurance Corporation
PROPOSED RULES
Crop insurance regulations:
Forage seeding crop, 57562–57564

Federal Deposit Insurance Corporation
NOTICES
Agency information collection activities:
Submission for OMB review; comment request, 57607
Meetings; Sunshine Act, 57607

Federal Energy Regulatory Commission
NOTICES
Electric rate and corporate regulation filings:
Entergy Services, Inc., et al., 57599–57600
Environmental statements; availability, etc.:
Portland, MI, et al., 57600–57601
Hydroelectric applications, 57601
Meetings:
Sunshine Act, 57601–57603
Applications, hearings, determinations, etc.:
ANR Pipeline Co., 57595
Carnegie Interstate Pipeline Co., 57596
Cincinnati Gas & Electric Co., 57596
Citizens Power Sales LLC et al., 57596
Colorado Interstate Gas Co., 57596–57597
Discovery Gas Transmission LLC, 57597
East Tennessee Natural Gas Co., 57597
Entergy Services, Inc., et al., 57597–57598
Sabine Pipe Line LLC, 57598
Texas Eastern Transmission Corp., 57598–57599

Federal Housing Finance Board
NOTICES
Meetings; Sunshine Act, 57608

Federal Trade Commission
NOTICES
Agency information collection activities:
Submission for OMB review; comment request, 57608–57609

Fish and Wildlife Service
PROPOSED RULES
Migratory bird hunting:
Tin shot; temporary approval as nontoxic for waterfowl and coots hunting, 57586–57588
NOTICES
Endangered and threatened species permit applications, 57618

Food and Drug Administration
NOTICES
Agency information collection activities:
Proposed collection; comment request, 57612–57616
Reporting and recordkeeping requirements, 57616
Submission for OMB review; comment request, 57616–57618

Forest Service
RULES
State and private forestry assistance:
Urban and Community Forestry Assistance Program, 57548–57549
NOTICES
Organization, functions, and authority delegations:
Director, Lands and Minerals, Eastern Region, 57591–57592

Health and Human Services Department
See Centers for Disease Control and Prevention
See Food and Drug Administration
NOTICES
Grants and cooperative agreement awards:
Association of Asian and Pacific Community Health Organizations, 57609–57610

Housing and Urban Development Department
RULES
Low-income housing:
Housing assistance payments (Section 8)—
Fair market rents for Housing Choice Voucher Program and Moderate Rehabilitation Single Room Occupancy Program, etc., 57657–57717

Interior Department
See Fish and Wildlife Service
See Land Management Bureau
See National Park Service
See Surface Mining Reclamation and Enforcement Office

Justice Department
See Drug Enforcement Administration

Labor Department
NOTICES
Agency information collection activities:
Submission for OMB review; comment request, 57626–57627

Land Management Bureau
NOTICES
Closure of public lands:
Fire restrictions—
Montana; rescinded, 57618
Coal leases, exploration licenses, etc.:
Utah, 57618–57619
Meetings:
California Desert District Advisory Council, 57619

National Capital Planning Commission
NOTICES
Environmental and historic preservation policies and procedures, 57627

National Highway Traffic Safety Administration
NOTICES
Motor vehicle defect proceedings; petitions, etc:
Blum, Dave; petition denied, 57643–57649
Motor vehicle safety standards; exemption petitions, etc.:
Suzuki Motor Corp., 57649–57650

National Oceanic and Atmospheric Administration
NOTICES
Meetings:
North Pacific Fishery Management Council; correction, 57592–57593
Pacific Fishery Management Council, 57593–57594

National Park Service
NOTICES
Concession contract negotiations:
Crater Lake National Park, CA, 57619–57620
Environmental statements; notice of intent:
Pipestone National Monument, MN; management plan, 57620
Meetings:
Death Valley National Park Advisory Commission, 57620

Realty actions; sales, leases, etc.:
California; hearing, 57620–57621

Natural Resources Conservation Service
RULES
Support activities:
Prime and unique farmlands; important farmlands inventory, 57537–57538
NOTICES
Environmental statements; availability, etc.:
Santa Cruz Watershed, NM, 57592
Field office technical guides; changes:
Indiana, 57592

Nuclear Regulatory Commission
NOTICES
Meetings:
Discrimination Task Group, 57628
Medical Uses of Isotopes Advisory Committee, 57628–57629
Applications, hearings, determinations, etc.:
Northeast Nuclear Energy Co., 57627–57628

Pension Benefit Guaranty Corporation
NOTICES
Privacy Act:
Systems of records, 57629–57631

Public Health Service
See Centers for Disease Control and Prevention
See Food and Drug Administration

Securities and Exchange Commission
NOTICES
Investment Company Act of 1940:
Exemption applications—
First American Investment Funds, Inc., et al., 57631–57633
Seasons Series Trust et al., 57633–57636
Self-regulatory organizations; proposed rule changes:
Chicago Board Options Exchange, Inc., 57636–57640

Small Business Administration
RULES
8(a) business development/small disadvantaged business status determinations; procedure rules governing cases before Hearings and Appeals Office, 57541–57542
NOTICES
Agency information collection activities:
Submission for OMB review; comment request, 57640
Disaster loan areas:
California, 57640–57641
Florida, 57641
Various States, 57641
Meetings:
National Advisory Council, 57641

State Department
NOTICES
Foreign terrorist organizations; designation:
Islamic Movement of Uzbekistan, 57641

Surface Mining Reclamation and Enforcement Office
PROPOSED RULES
Permanent program and abandoned mine land reclamation plan submissions:
Montana, 57581–57585

Surface Transportation Board
NOTICES
Practice and procedure:
Consolidated financial reporting by commonly controlled railroads, 57650–57651
Railroad services abandonment:
CSX Transportation, Inc., 57651

Tennessee Valley Authority
NOTICES
Agency information collection activities:
Submission for OMB review; comment request, 57641–57642
Meetings:
Sunshine Act, 57642

Transportation Department
See Federal Aviation Administration
See National Highway Traffic Safety Administration
See Surface Transportation Board

Treasury Department
See Alcohol, Tobacco and Firearms Bureau
NOTICES
Agency information collection activities:
Submission for OMB review; comment request, 57652–57654

Veterans Affairs Department
NOTICES
Agency information collection activities:
Proposed collection; comment request, 57654–57655
Senior Executive Service:
Performance Review Boards; membership, 57655–57656

Separate Parts In This Issue

Part II
Department of Housing and Urban Development, 57657–57717

Part III
The President, 57719–57721

Reader Aids
Consult the Reader Aids section at the end of this issue for phone numbers, online resources, finding aids, reminders, and notice of recently enacted public laws.

CFR PARTS AFFECTED IN THIS ISSUE

A cumulative list of the parts affected this month can be found in the Reader Aids section at the end of this issue.

3 CFR

Executive Orders:

12865 (See Notice of September 22, 2000) 57721

13069 (See Notice of September 22, 2000) 57721

13098 (See Notice of September 22, 2000) 57721

Administrative Orders:

Notices:

September 22, 2000 57721

7 CFR

301 57537

657 57537

905 57538

Proposed Rules:

6 57562

457 57562

13 CFR

124 57541

134 57541

14 CFR

71 (4 documents) 57542, 57543

Proposed Rules:

25 57564

71 (8 documents) 57567, 57568, 57569, 57571, 57572, 57573, 57574, 57576

21 CFR

Proposed Rules:

1310 57577

24 CFR

888 57658

27 CFR

270 57544

275 57544

290 57544

295 57544

296 57544

30 CFR

Proposed Rules:

926 (2 documents) 57581, 57583

36 CFR

230 57547

40 CFR

180 57549

Proposed Rules:

152 57585

156 57585

47 CFR

15 57557

50 CFR

Proposed Rules:

20 57586

Rules and Regulations

Federal Register
Vol. 65, No. 186
Monday, September 25, 2000

This section of the FEDERAL REGISTER contains regulatory documents having general applicability and legal effect, most of which are keyed to and codified in the Code of Federal Regulations, which is published under 50 titles pursuant to 44 U.S.C. 1510.

The Code of Federal Regulations is sold by the Superintendent of Documents. Prices of new books are listed in the first FEDERAL REGISTER issue of each week.

DEPARTMENT OF AGRICULTURE

Animal and Plant Health Inspection Service

7 CFR Part 301

[Docket No. 99–097–3]

Melon Fruit Fly Regulations; Regulated Areas, Regulated Articles, and Removal of Quarantined Area

AGENCY: Animal and Plant Health Inspection Service, USDA.

ACTION: Affirmation of interim rules as final rule.

SUMMARY: We are adopting as a final rule, without change, two interim rules that amended the melon fruit fly regulations. In one interim rule published in the **Federal Register** on February 22, 2000, we established the melon fruit fly regulations and quarantined a portion of Los Angeles County, CA. The establishment of the melon fruit fly regulations and quarantine of a portion of Los Angeles County, CA, were necessary on an emergency basis to prevent the spread of the melon fruit fly into noninfested areas of the United States. In another interim rule published in the **Federal Register** on June 28, 2000, we removed the quarantined portion of Los Angeles County, CA. The removal of the quarantined portion of Los Angeles County, CA, was necessary to relieve restrictions that were no longer needed to prevent the spread of the melon fruit fly because we determined that the melon fruit fly was eradicated from this portion of Los Angeles County, CA. This portion of Los Angeles County, CA, was the only area in California quarantined for the melon fruit fly. Therefore, as a result of the interim rule that removed the quarantine on a portion of Los Angeles County, CA, there are no longer any areas in the continental United States quarantined because of the melon fruit fly.

EFFECTIVE DATE: September 25, 2000.

FOR FURTHER INFORMATION CONTACT: Mr. Stephen A. Knight, Operations Officer, Invasive Species and Pest Management Staff, PPQ, APHIS, 4700 River Road Unit 134, Riverdale, MD 20737–1236; (301) 734–8039.

SUPPLEMENTARY INFORMATION:

Background

The melon fruit fly, *Bactrocera cucurbitae* (Coquillett), is a very destructive pest of fruits and vegetables, including melons, mangoes, peppers, squash, cucumbers, beans, oranges, and peaches. This pest can cause serious economic losses by lowering the yield and quality of these fruits and vegetables and by damaging the seedlings and young plants of squash, melons, and cucumbers. Heavy infestations can result in complete loss of these crops.

In an interim rule effective February 22, 2000, and published in the **Federal Register** on February 22, 2000 (65 FR 8633–8640, Docket No. 99–097–1), we established Federal regulations for the melon fruit fly in 7 CFR 301.97 through 301.97–10 and quarantined a portion of Los Angeles County, CA. In an interim rule effective June 23, 2000, and published in the **Federal Register** on June 28, 2000 (65 FR 39779–39780, Docket No. 99–097–2), we amended the melon fruit fly regulations by removing Los Angeles County, CA, from the list of quarantined areas in § 301.97–3(c). That action relieved unnecessary restrictions on the interstate movement of regulated articles from this area.

Comments on the interim rules were required to be received on or before 60 days after the date of publication in the **Federal Register**. We did not receive any comments. Therefore, for the reasons given in the interim rules, we are adopting the interim rules as a final rule.

This action also affirms the information contained in the interim rules concerning Executive Order 12866 and the Regulatory Flexibility Act, Executive Orders 12372 and 12988, and the Paperwork Reduction Act.

Further, for this action, the Office of Management and Budget has waived the review process required by Executive Order 12866.

List of Subjects in 7 CFR Part 301

Agricultural commodities, Plant diseases and pests, Quarantine, Reporting and recordkeeping requirements, Transportation.

PART 301—DOMESTIC QUARANTINE NOTICES

Accordingly, we are adopting as a final rule, without change, the interim rules that amended 7 CFR part 301 and that were published at 65 FR 8633–8640 on February 22, 2000, and 65 FR 39779–39780 on June 28, 2000.

Authority: Title IV, Pub. L. 106–224, 114 Stat. 438, 7 U.S.C. 7701–7772; 7 U.S.C. 166; 7 CFR 2.22, 2.80, and 371.3.

Done in Washington, DC, this 19th day of September 2000.

Bobby R. Acord,

Acting Administrator, Animal and Plant Health Inspection Service.

[FR Doc. 00–24545 Filed 9–22–00; 8:45 am]

BILLING CODE 3410–34–P

DEPARTMENT OF AGRICULTURE

Natural Resources Conservation Service

7 CFR Part 657

Prime and Unique Farmlands—Important Farmlands Inventory

AGENCY: Natural Resources Conservation Service, Agriculture.

ACTION: Final rule.

SUMMARY: The Natural Resources Conservation Service is amending its regulations regarding responsibilities for conducting important farmland inventories under the Federal Crop Insurance Reform and Department of Agriculture Reorganization Act of 1994 (the 1994 Act). The amendments reflect changes to individual and organizational titles made since the regulations were originally drafted.

EFFECTIVE DATE: September 25, 2000.

FOR FURTHER INFORMATION CONTACT: Horace Smith, Division Director, Soil Survey Division, Natural Resources Conservation Service, P.O. Box 2890, Washington, D.C. 20013; 202–720–1820.

SUPPLEMENTARY INFORMATION: This final rule makes corrections to nomenclature in the regulations for conducting important farmland inventories (7 CFR

Part 657, Subpart A.) Since the implementing legislation was passed, the names of the offices and titles of officials charged with conducting important farmland inventories have changed. This amendment reflects those changes. In addition, this rule amends the authority citation to clarify the list of statutory authorities for the inventories.

These rules are not expected to have significant economic impact under the criteria of the Regulatory Flexibility Act. They will not impose information collection requirements under the provisions of the Paperwork Reduction Act of 1980, 44 U.S.C. Chapter 35.

List of Subjects in 7 CFR Part 657

Farmlands.

For the reasons set forth above, Subpart A, Part 657 of Chapter VI of Title 7 of the Code of Federal Regulations is amended as follows:

PART 657—PRIME AND UNIQUE FARMLAND

Subpart A—Important Farmlands Inventory

1. The authority citation for Subpart A, Part 657 is revised to read as follows:

Authority: 7 U.S.C. 1010a; 16 U.S.C. 590a–590f; 42 U.S.C. 3271–3274.

§ 657.4 [Amended]

2. Section 657.4(a)(3)(iii) is amended by revising ''NRCS Technical Service Centers (TSC's). (See 7 600.3, 600.6)'' to read ''National Soil Survey Center. (see 7 CFR 600.2(c), 600.6)''.

3. Section 657.4(a)(4) is amended by revising the first sentence to read as follows: ''Coordinate soil mapping units that qualify as prime farmlands with adjacent States, including Major Land Resource Area Offices (see 7 CFR 600.4, 600.7) responsible for the soil series.''

4. Section 657.4(a)(6) is amended by revising ''Administrator'' to read ''Chief''.

5. Section 657.4(b) is amended by revising the heading and the first sentence to read as follows: ''*National Soil Survey Center.* The National Soil Survey Center is to provide requested technical assistance to State Conservationists and Major Land Resource Area Offices in inventorying prime and unique farmlands (see 7 CFR 600.2(c)(1), 600.4, 600.7).''

6. Section 657.4(c) is amended by revising ''Assistant Administrator for Field Services (See 7 CFR 600.2)'' to read ''Deputy Chief for Soil Survey and Resource Assessment (see 7 CFR 600.2(b)(3))''.

Signed in Washington, D.C. on September 14, 2000.

Pearlie S. Reed,

Chief.

[FR Doc. 00–24525 Filed 9–22–00; 8:45 am]

BILLING CODE 3410–16–P

DEPARTMENT OF AGRICULTURE

Agricultural Marketing Service

7 CFR Part 905

[Docket No. FV00–905–3 FR]

Oranges, Grapefruit, Tangerines, and Tangelos Grown in Florida; Increase in the Minimum Size Requirements for Dancy, Robinson, and Sunburst Tangerines

AGENCY: Agricultural Marketing Service, USDA.

ACTION: Final rule.

SUMMARY: This rule increases the minimum size requirements for Dancy, Robinson, and Sunburst tangerines grown in Florida. The minimum size requirements increase to 2 6/16 inches diameter for both domestic and export shipments. The marketing order regulates the handling of oranges, grapefruit, tangerines, and tangelos grown in Florida and is administered locally by the Citrus Administrative Committee (Committee). This rule will help the Florida tangerine industry meet market demands for larger fruit and should help increase returns to producers.

EFFECTIVE DATE: This final rule becomes effective September 26, 2000.

FOR FURTHER INFORMATION CONTACT: William G. Pimental, Marketing Specialist, Southeast Marketing Field Office, Marketing Order Administration Branch, Fruit and Vegetable Programs, AMS, USDA, P.O. Box 2276, Winter Haven, Florida 33883–2276; telephone: (863) 299–4770, Fax: (863) 299–5169; or George Kelhart, Technical Advisor, Marketing Order Administration Branch, Fruit and Vegetable Programs, AMS, USDA, room 2525–S, P.O. Box 96456, Washington, DC 20090–6456; telephone: (202) 720–2491, Fax: (202) 720–5698.

Small businesses may request information on complying with this regulation by contacting Jay Guerber, Marketing Order Administration Branch, Fruit and Vegetable Programs, AMS, USDA, P.O. Box 96456, room 2525–S, Washington, DC 20090–6456; telephone: (202) 720–2491, Fax: (202) 720–5698, or E-mail: Jay.Guerber@usda.gov.

SUPPLEMENTARY INFORMATION: This final rule is issued under Marketing Agreement No. 84 and Marketing Order No. 905, both as amended (7 CFR part 905), regulating the handling of oranges, grapefruit, tangerines, and tangelos grown in Florida, hereinafter referred to as the ''order.'' The marketing agreement and order are effective under the Agricultural Marketing Agreement Act of 1937, as amended (7 U.S.C. 601–674), hereinafter referred to as the ''Act.''

The Department of Agriculture (Department) is issuing this rule in conformance with Executive Order 12866.

This final rule has been reviewed under Executive Order 12988, Civil Justice Reform. This rule is not intended to have retroactive effect. This rule will not preempt any State or local laws, regulations, or policies, unless they present an irreconcilable conflict with this rule.

The Act provides that administrative proceedings must be exhausted before parties may file suit in court. Under section 608c(15)(A) of the Act, any handler subject to an order may file with the Secretary a petition stating that the order, any provision of the order, or any obligation imposed in connection with the order is not in accordance with law and request a modification of the order or to be exempted therefrom. A handler is afforded the opportunity for a hearing on the petition. After the hearing the Secretary would rule on the petition. The Act provides that the district court of the United States in any district in which the handler is an inhabitant, or has his or her principal place of business, has jurisdiction to review the Secretary's ruling on the petition, provided an action is filed not later than 20 days after the date of the entry of the ruling.

The order for Florida citrus provides for the establishment of minimum grade and size requirements with the concurrence of the Secretary. The minimum grade and size requirements are designed to provide fresh markets with fruit of acceptable quality and size, thereby maintaining consumer confidence for fresh Florida citrus. This contributes to stable marketing conditions in the interest of growers, handlers, and consumers, and helps increase returns to Florida citrus growers. The current minimum grade standard for domestic and export shipments of Dancy, Robinson, and Sunburst tangerines is U.S. No. 1. The current minimum size requirement for domestic shipments is 2 4/16 inches in diameter (size 210), and the minimum size for export shipments is 2 2/16 inches

in diameter for Dancy tangerines and 2 4/16 for Robinson and Sunburst.

This final rule changes the order's rules and regulations by increasing the minimum size requirement for domestic and export shipments of Dancy, Robinson, and Sunburst tangerines. This rule increases the minimum size to 2 6/16 inches in diameter for Dancy, Robinson, and Sunburst tangerines both for domestic and export shipments. This rule will help the Florida tangerine industry meet market and industry demand for larger fruit and should help increase returns to producers. The Committee met on May 26, 2000, and unanimously recommended this action.

Section 905.52 of the order, in part, authorizes the Committee to recommend minimum grade and size regulations to the Secretary. Section 905.306 (7 CFR part 905.306) specifies minimum grade and size requirements for different varieties of fresh Florida tangerines. Such requirements for domestic shipments are specified in § 905.306 in Table I of paragraph (a), and for export shipments in Table II of paragraph (b). This rule adjusts Table I and Table II to establish a minimum size of 2 6/16 inches diameter for Dancy, Robinson, and Sunburst tangerines.

This rule increases the minimum size requirement for domestic and export shipments of Dancy, Robinson, and Sunburst tangerines. Based on an analysis of markets and demands of buyers, the Committee believes that an increase in minimum size will improve the marketing of Florida tangerines. This follows an industry movement toward shipping larger tangerines. New commercial varieties have resulted in larger-sized tangerines being shipped in response to a strong consumer demand. Because of this demand, production of larger tangerines has been a popular method of improving returns among producers as it also increases total yields.

The shift toward tangerine varieties producing larger fruit has been in response to customer needs. Robinson and Dancy tangerines tend to be smaller varieties. Overall, production of these two varieties has decreased by more than 60 percent from the 1995–96 season to the 1999–2000 season. Conversely, production of larger-sized varieties such as Sunburst and Fallglo has been increasing. In terms of total shipments of Dancy, Robinson, and Sunburst tangerines, Sunburst represented almost 95 percent of combined shipments for the 1999–2000 season.

The preference for large sizes is also evident in the volume of small sizes shipped. From the 1995–96 season to the 1999–2000 season, shipments of size 210 fruit accounted for on average less than 1.3 percent of total Dancy, Robinson, and Sunburst tangerine shipments. Even during the 1998–99 season when sizes for all Florida citrus were unusually small, shipments of size 210 tangerines only accounted for 2.3 percent of total shipments of these three varieties.

The change in the minimum size was recommended to address this movement of customer demand and industry production toward larger sizes. Size continues to be a major influence on price. The Committee believes that the availability of small size 210 fruit has a negative affect on market price. In terms of price, a carton of size 210 (2 4/16 inch diameter) tangerines can be as much as $3 less than a carton of size 176 (2 6/16 inch) tangerines. For the 1999–2000 season, the average price for a carton of size 210 Dancy, Robinson, or Sunburst tangerines was $7.80. This compares to a weighted average price for all sizes of $11.26. The Committee believes increasing the minimum size better matches supply with demand and will lessen the price depressing affect of smaller sizes.

In addition, the seasons for these three varieties are short. The season for the Dancy tends to be three weeks long, five weeks for the Robinson, and 12 weeks for the Sunburst. With this short marketing window, it is of increased importance that only the best, most preferred fruit enters the market. The market has no time to recover from shipments of fruit that have a depressing effect on price. Also, on average, approximately 65 percent of the crop for these three varieties goes to the fresh market. With the on tree price for processing averaging less than $1.00, it is imperative that the fresh market be maintained.

The increase in the minimum size to 2 6/16 inches in diameter is not expected to significantly affect the total number of shipments. During the 1999–2000 season, of the approximate 3,821,000 4/5 bushel container shipments of Dancy, Robinson, and Sunburst tangerines from Florida, only about 20,670 cartons were size 210. Therefore, the increase in the size requirement would only reduce shipments by around 0.5 percent. This change will also make the minimum size consistent for all tangerines, as the minimum size is already 2 6/16 inches for Fallglo and Honey tangerines.

Experience has shown that providing uniform quality and size acceptable to consumers helps stabilize the market, improve grower returns, and foster market growth. The increased minimum size matches size to market preferences, and is expected to benefit both producers and handlers of Florida tangerines. Increasing the minimum size is expected to further enhance consumer demand and encourage repeat purchases resulting in increased returns to producers. Therefore, based on available information, the Committee unanimously recommended that the minimum size for shipping Dancy, Robinson, or Sunburst tangerines to the domestic and export market be 2 6/16 inches in diameter.

Handlers in Florida shipped approximately 3,821,000 4/5 bushel cartons of Dancy, Robinson, and Sunburst tangerines to the fresh market during the 1999–2000 season. Of these cartons, about 150,000 were exported. In the past three seasons, domestic shipments of Florida Dancy, Robinson, and Sunburst tangerines averaged about 3.5 million cartons.

Pursuant to requirements set forth in the Regulatory Flexibility Act (RFA), the Agricultural Marketing Service (AMS) has considered the economic impact of this action on small entities. Accordingly, AMS has prepared this final regulatory flexibility analysis.

The purpose of the RFA is to fit regulatory actions to the scale of business subject to such actions in order that small businesses will not be unduly or disproportionately burdened. Marketing orders issued pursuant to the Act, and rules issued thereunder, are unique in that they are brought about through group action of essentially small entities acting on their own behalf. Thus, both statutes have small entity orientation and compatibility.

There are approximately 55 tangerine handlers who are subject to regulation under the order, and approximately 11,000 growers of citrus in the regulated area. Small agricultural service firms, which include tangerine handlers, are defined by the Small Business Administration (SBA) as those having annual receipts of less than $5,000,000, and small agricultural producers are defined as those having annual receipts of less than $500,000 (13 CFR 121.201).

Based on industry and Committee data for the 1999–2000 season, the average annual f.o.b. price for fresh tangerines was around $12.00 per 4/5 bushel carton, and total fresh shipments of Dancy, Robinson, and Sunburst tangerines for the 1999–2000 season were 3,821,000 cartons. Approximately 25 percent of all handlers handled 70 percent of Florida tangerine shipments. In addition, many of these handlers ship other citrus fruit and products which are not included in Committee data but would contribute further to handler receipts. Using the average f.o.b. price,

about 55 percent of tangerine handlers could be considered small businesses under SBA's definition. The majority of these handlers, and growers may be classified as small entities.

This rule increases the minimum size requirement for domestic and export shipments of tangerines to 2 6/16 inches in diameter for the Dancy, Robinson, and Sunburst varieties. The current minimum size requirement for domestic shipments is 2 4/16 inches in diameter, and the minimum size for export shipments is 2 2/16 inches in diameter for Dancy tangerines and 2 4/16 for Robinson and Sunburst. Section 905.52 of the order, in part, authorizes the Committee to recommend minimum grade and size regulations to the Secretary. Section 905.306 (7 CFR part 905.306) specifies minimum grade and size requirements for different varieties of fresh Florida tangerines. Such requirements for domestic shipments are specified in § 905.306 in Table I of paragraph (a), and for export shipments in Table II of paragraph (b). This rule adjusts Table I and Table II to establish a minimum size of 2 6/16 inches in diameter for Dancy, Robinson, and Sunburst tangerines. This rule will help the Florida tangerine industry meet market and industry demands and should help increase returns to producers.

The costs associated with this rule are expected to be minimal. The increase in the minimum size is not expected to significantly affect the total number of tangerine shipments. Rather, the Committee believes this size increase will help improve the marketing of Florida tangerines. The direct cost related to this change would stem from the shipment volume of size 210 tangerines times price. In terms of last season, that would be approximately 20,670 cartons times the average price for size 210 tangerines, $7.80, for a possible cost of about $161,226.

However, the Committee believes that this action will help stabilize prices and increase shipments. This change was made to address the increasing demand for larger sizes. While there are some short-term costs associated with increasing the minimum size, the benefits are expected to outweigh the costs. If this regulation just succeeds in raising returns five cents a carton, it would more than cover its costs. In addition, this change should not require the purchase of any additional equipment. This action is consistent with current and anticipated demand. The opportunities and benefits of this rule are expected to be equally available to tangerine handlers and growers regardless of their size of operation.

The Committee considered one alternative to this action. The Committee discussed leaving the regulations as they were. However, this alternative was rejected based on the consideration of current demand for larger sizes and the possible negative impact on price resulting from maintaining the current minimum size.

This rule increases size requirements under the marketing order for Florida citrus. Accordingly, this action will not impose any additional reporting or recordkeeping requirements on either small or large tangerine handlers. As with all Federal marketing order programs, reports and forms are periodically reviewed to reduce information requirements and duplication by industry and public sector agencies.

As noted in the initial regulatory flexibility analysis, the Department has not identified any relevant Federal rules that duplicate, overlap or conflict with this rule. However, tangerines must meet the requirements as specified in the U.S. Standards for Grades of Florida Tangerines (7 CFR 51.1810 through 51.1837) issued under the Agricultural Marketing Act of 1946 (7 U.S.C. 1621 through 1627).

In addition, the Committee's meeting was widely publicized throughout the Florida citrus industry and all interested persons were invited to attend the meeting and participate in Committee deliberations on all issues. Like all Committee meetings, the May 26, 2000, meeting was a public meeting and all entities, both large and small, were able to express their views on this issue.

A proposed rule concerning this action was published in the **Federal Register** on August 1, 2000 (65 FR 46879). Copies of the rule were mailed or sent via facsimile to all Committee members and Florida citrus handlers. Finally, the rule was made available through the Internet by the Office of the **Federal Register**. A 30-day comment period ending August 31, 2000, was provided to allow interested persons to respond to the proposal. No comments were received.

A small business guide on complying with fruit, vegetable, and specialty crop marketing agreements and orders may be viewed at: http://www.ams.usda.gov/fv/moab.html. Any questions about the compliance guide should be sent to Jay Guerber at the previously mentioned address in the **FOR FURTHER INFORMATION CONTACT** section.

After consideration of all relevant matter presented, including the information and recommendation submitted by the Committee and other available information, it is hereby found that this rule, as hereinafter set forth, will tend to effectuate the declared policy of the Act.

It is further found that good cause exists for not postponing the effective date of this rule until 30 days after publication in the **Federal Register** (5 U.S.C. 553). Tangerine shipments are expected to begin in September, and handlers are ready to comply with the increased size requirements of this rule, which were recommended at a public meeting of the Committee. Also, a 30-day comment period was provided for in the proposed rule, and no comments were received.

List of Subjects in 7 CFR Part 905

Grapefruit, Marketing agreements, Oranges, Reporting and recordkeeping requirements, Tangerines, Tangelos.

For the reasons set forth in the preamble, 7 CFR part 905 is amended as follows:

PART 905—ORANGES, GRAPEFRUIT, TANGERINES, AND TANGELOS GROWN IN FLORIDA

1. The authority citation for 7 CFR part 905 continues to read as follows:

Authority: 7 U.S.C. 601–674.

2. In § 905.306, Table I in paragraph (a) and Table II in paragraph (b) are amended by revising the entries for Dancy, Robinson, and Sunburst under ''Tangerines,'' to read as follows:

§ 905.306 Orange, Grapefruit, Tangerine, and Tangelo Regulation.

(a) * * *

TABLE II

Variety	Regulation period	Minimum grade	Minimum diameter (inches)
(1)	(2)	(3)	(4)
TANGERINES			
Dancy,	On and after September 26, 2000	U.S. No. 1	2–6/16
* *	* *	* *	*
Robinson,	On and after September 26, 2000	U.S. No. 1	2–6/16
Sunburst,	On and after September 26, 2000	U.S. No. 1	2–6/16

* * * * *

(b) * * *

TABLE II

Variety	Regulation period	Minimum grade	Minimum diameter (inches)
(1)	(2)	(3)	(4)
TANGERINES			
Dancy,	On and after September 26, 2000	U.S. No. 1	2–6/16
* *	* *	* *	*
Robinson,	On and after September 26, 2000	U.S. No. 1	2–6/16
Sunburst,	On and after September 26, 2000	U.S. No. 1	2–6/16

* * * * *

Dated: September 18, 2000.

Robert C. Keeney,

Deputy Administrator, Fruit and Vegetable Programs.

[FR Doc. 00–24505 Filed 9–22–00; 8:45 am]

BILLING CODE 3410–02–U

SMALL BUSINESS ADMINISTRATION

13 CFR Parts 124 and 134

8(a) Business Development/Small Disadvantaged Business Status Determinations; Rules of Procedure Governing Cases Before the Office of Hearings and Appeals

AGENCY: Small Business Administration.

ACTION: Direct final rule.

SUMMARY: Due to a reorganization within the Office of General Counsel at the Small Business Administration (SBA), a new Office of Procurement Law was created to handle all procurement-related legal issues at SBA. Among other things, this new office will represent the Agency in all administrative litigation involving size and SIC code appeals, eligibility appeals relating to the 8(a) Business Development (BD) and Small Disadvantaged Business (SDB) programs, suspensions of firms in the 8(a) BD program, and appeals of denials of requests for waivers of contract performance requirements in the 8(a) BD program. This rule changes the point of contact identified in SBA's regulations for these types of administrative appeals from the Associate General Counsel for General Law to the Associate General Counsel for Procurement Law.

DATES: This rule is effective on October 25, 2000. Comments must be submitted by October 10, 2000. If adverse comment is received, SBA will publish a timely withdrawal of the rule in the **Federal Register**.

ADDRESSES: Written comments should be addressed to John W. Klein, Acting Associate General Counsel for Procurement Law, Small Business Administration, 409 Third Street, SW., Washington, DC 20416.

FOR FURTHER INFORMATION CONTACT: Genemarie M. Pade (202) 205–6639.

SUPPLEMENTARY INFORMATION: The Small Business Administration (SBA) recently reorganized its Office of General Counsel. As a result of this reorganization, a new Office of Procurement Law was created to handle all procurement-related legal issues at SBA. Previously, procurement law issues at SBA were handled by the Office of General Law within the Office of General Counsel. The Office of General Law represented the Agency in administrative litigation involving: (1) Denials of Small Disadvantaged Business (SDB) certification; (2) denials of 8(a) Business Development (BD) program participation; (3) SIC code and size determinations; (4) suspensions of 8(a) BD program assistance; and (5) denials of requests for waivers of contract performance requirements in the 8(a) BD program. After the reorganization, the Office of General Law continues to exist, but will no longer handle procurement law issues. The Office of Procurement Law will now represent the Agency in all procurement-related appeals to SBA's Office of Hearings and Appeals. Because of this internal change at SBA, SBA's regulations need to be changed to identify the Associate General Counsel for Procurement Law as the individual upon whom copies of appeals need to be served. Thus, for the five types of appeals to SBA's Office of Hearings and Appeals identified above, this rule changes the point of contact identified in SBA's regulations for these types of administrative appeals from the Associate General Counsel for General Law to the Associate General Counsel for Procurement Law.

Compliance With Executive Orders 13132, 12988 and 12866, the Regulatory Flexibility Act (5 U.S.C. 601 et seq.), and the Paperwork Reduction Act (44 U.S.C. Chapter 3501 et seq.)

This rule is not a ''significant'' regulatory action under Executive Order 12866.

SBA has determined that this final rule will not have a significant economic impact on a substantial number of small entities within the meaning of the Regulatory Flexibility Act, 5 U.S.C. 601–612. The rule is procedural and merely changes the title of the individual to whom interested parties must serve certain administrative litigation pleadings.

For the purpose of the Paperwork Reduction Act, 44 U.S.C. Ch. 35, SBA certifies that this rule would not impose new reporting or record keeping requirements.

For purposes of Executive Order 13132, SBA certifies that this rule does not have any federalism implications warranting the preparation of a Federalism Assessment.

For purposes of Executive Order 12988, SBA certifies that this rule is drafted, to the extent practicable, in accordance with the standards set forth in section 3 of this order.

List of Subjects

13 CFR Part 124

Government procurement, Hawaiian Natives, Minority businesses, Reporting and record keeping requirements; Technical Assistance, Tribally-owned concerns.

13 CFR Part 134

Administrative practice and procedure, Organization and functions (Government agencies).

Accordingly, for the reasons set forth above, SBA amends Title 13, Code of Federal Regulations (CFR), as follows:

PART 124—[AMENDED]

1. The authority citation for 13 CFR part 124 continues to read as follows:

Authority: 15 U.S.C. 634(b)(6), 636(j), 637(a), 637(d) and Pub. L. 99–661, Pub. L. 100–656, sec. 1207, Pub. L. 101-37, Pub. L. 101–574, and 42 U.S.C. 9815.

2. Section 124.1008 is amended by revising paragraph (f)(4)(i) to read as follows:

§ 124.1008 How does a firm become certified as an SDB?

* * * * *

(f) * * *

(4) * * *

(i) The firm must serve SBA's Associate General Counsel for Procurement Law with a copy of the appeal.

* * * * *

3. Section 124.1009 is amended by revising the introductory paragraph to read as follows:

§ 124.1009 How does a firm appeal a decision of a Private Certifier?

Where a Private Certifier performs an ownership and control determination and finds that a firm is not owned and controlled by the individual(s) claiming disadvantaged status, the firm may appeal that decision to OHA pursuant to part 134 of this title. The firm must serve SBA's Associate General Counsel for Procurement Law and the applicable Private Certifier with a copy of the appeal.

* * * * *

PART 134—[AMENDED]

4. The authority citation for 13 CFR part 134 continues to read as follows:

Authority: 5 U.S.C. 504; 15 U.S.C. 632, 634(b)(6), and 637(a).

5. Section 134.305 is amended by revising paragraph (b)(5) to read as follows:

§ 134.305 The appeal petition.

* * * * *

(b) * * *

(5) SBA's Office of Procurement Law.

6. Section 134.403 is amended by revising paragraph (a)(1) to read as follows:

§ 134.403 Service of appeal petition.

* * * * *

(a) * * *

(1) For appeals relating to denials of program admission pursuant to § 124.206 of this title, suspensions of program assistance pursuant to § 124.305, or denials of requests for waivers pursuant to § 124.515, a petitioner must serve the SBA's Associate General Counsel for Procurement Law.

* * * * *

Dated: August 23, 2000.

Fred P. Hochberg,

Acting Administrator.

[FR Doc. 00–23482 Filed 9–22–00; 8:45 am]

BILLING CODE 8025–01–U

DEPARTMENT OF TRANSPORTATION

Federal Aviation Administration

14 CFR Part 71

[Airspace Docket No. 00–ASO–39]

Removal of Class E Airspace; Simmons Army Airfield (AAF), NC.

AGENCY: Federal Aviation Administration (FAA), DOT.

ACTION: Final rule.

SUMMARY: This action removes the Class E4 Airspace at Simmons AAF, NC, as there is no longer a Standard Instrument Approach Procedure (SIAP) for Simmons AAF requiring an extension to the Class D surface area airspace.

EFFECTIVE DATE: 0901 UTC, November 30, 2000.

FOR FURTHER INFORMATION CONTACT: Nancy B. Shelton, Manager, Airspace Branch, Air Traffic Division, Federal Aviation Administration, P.O. Box 20636, Atlanta, Georgia 30320; telephone (404) 305–5586.

SUPPLEMENTARY INFORMATION:

History

A review of the controlled airspace for Simmons AAF revealed the existence of an extension to the Class D surface area airspace, although there was no longer a SIAP requiring such an extension. Therefore, the Class E4 airspace area must be removed. This rule will become effective on the date specified in the ''DATE'' section. Since this action eliminates the impact of controlled airspace on users of the airspace in the vicinity of the Simmons AAF, notice and public procedure under 5 U.S.C. 553(b) are unnecessary. Designations for Class E airspace areas designated as an extension to Class D airspace area are published in FAA Order 7400.9H, dated September 1, 2000, and effective September 16, 2000, which is incorporated by reference in 14 CFR part 71.1. The Class E designation listed in this document will be published subsequently in the Order.

The Rule

This amendment to Part 71 of the Federal Aviation Regulations (14 CFR part 71) removes Class E4 airspace at Simmons AAF, NC.

The FAA has determined that this regulation only involves an established body of technical regulations for which frequent and routine amendments are necessary to keep them operationally current. It, therefore, (1) is not a ''significant regulatory action'' under Executive Order 12866; (2) is not a

''significant rule'' under DOT Regulatory Policies and Procedures (44 FR 11034; February 26, 1979); and (3) does not warrant preparation of a regulatory evaluation as the anticipated impact is so minimal. Since this is a routine matter that will only affect air traffic procedures and air navigation, it is certified that this rule will not have a significant economic impact on a substantial number of small entities under the criteria of the Regulatory Flexibility Act.

List of Subjects in 14 CFR Part 71

Airspace, Incorporation by Reference, Navigation (air).

Adoption of the Amendment

In consideration of the foregoing, the Federal Aviation Administration amends 14 CFR Part 71 as follows:

PART 71—DESIGNATION OF CLASS A, CLASS B, CLASS C, CLASS D AND CLASS E AIRSPACE AREAS; AIRWAYS; ROUTES; AND REPORTING POINTS

1. The authority citation for 14 CFR Part 71 continues to read as follows:

Authority: 49 U.S.C. 106(g); 40103, 40113, 40120; EO 10854, 24 FR 9565, 3 CFR, 1959–1963 Comp., p. 389; 14 CFR 11.69.

§ 71.1 [Amended]

2. The incorporation by reference in 14 CFR 71.1 of Federal Aviation Administration Order 7400.9H, Airspace Designations and Reporting Points, dated September 1, 2000, and effective September 16, 2000, is amended as follows:

Paragraph 6004 Class E4 Airspace Areas Designated as an Extension to Class D Airspace Area.

* * * * *

ASO NC E4 Simmons AAF, NC [Removed]

* * * * *

Issued in College Park, Georgia, on September 15, 2000.

Wade T. Carpenter,

Acting Manager, Air Traffic Division, Southern Region.

[FR Doc. 00–24491 Filed 9–22–00; 8:45 am]

BILLING CODE 4910–13–M

DEPARTMENT OF TRANSPORTATION

Federal Aviation Administration

14 CFR Part 71

[Airspace Docket No. 00–ACE–19]

Amendment to Class E Airspace; Atwood, KS

AGENCY: Federal Aviation Administration, DOT.

ACTION: Direct final rule; confirmation of effective date.

SUMMARY: This document confirms the effective date of a direct final rule which revises Class E airspace at Atwood, KS.

DATES: The direct final rule published at 65 FR 43684 is effective on 0901 UTC, November 30, 2000.

FOR FURTHER INFORMATION CONTACT: Kathy Randolph, Air Traffic Division, Airspace Branch, ACE–520C, DOT Regional Headquarters Building, Federal Aviation Administration, 901 Locust, Kansas City, MO 64106; telephone: (816) 329–2525.

SUPPLEMENTARY INFORMATION:

The FAA published this direct final rule with a request for comments in the **Federal Register** on July 14, 2000 (65 FR 43684). The FAA uses the direct final rulemaking procedure for a non-controversial rule where the FAA believes that there will be no adverse public comment. This direct final rule advised the public that no adverse comments were anticipated, and that unless a written adverse comment, or a written notice of intent to submit such an adverse comment, were received within the comment period, the regulation would become effective on November 30, 2000. No adverse comments were received, and thus this notice confirms that this direct final rule will become effective on that date.

Issued in Kansas City, MO on September 12, 2000.

Richard L. Day,

Acting Manager, Air Traffic Division, Central Region.

[FR Doc. 00–24489 Filed 9–22–00; 8:45 am]

BILLING CODE 4910–13–M

DEPARTMENT OF TRANSPORTATION

Federal Aviation Administration

14 CFR Part 71

[Airspace Docket No. 00–ACE–20]

Amendment to Class E Airspace; Oakley, KS

AGENCY: Federal Aviation Administration, DOT.

ACTION: Direct final rule; confirmation of effective date.

SUMMARY: This document confirms the effective date of a direct final rule which revises Class E airspace at Oakley, KS.

DATES: The direct final rule published at 65 FR 43683 is effective on 0901 UTC, November 30, 2000.

FOR FURTHER INFORMATION CONTACT: Kathy Randolph, Air Traffic Division, Airspace Branch ACE–520C, DOT Regional Headquarters Building, Federal Aviation Administration, 901 Locust, Kansas City, MO 64106; telephone: (816) 329–2525.

SUPPLEMENTARY INFORMATION:

The FAA published this direct final rule with a request for comments in the **Federal Register** on July 14, 2000 (65 FR 43683). The FAA uses the direct final rulemaking procedure for non-controversial rule where the FAA believes that there will be no adverse public comment. This direct final rule advised the public that no adverse comments were anticipated, and that unless a written adverse comment, or a written notice of intent to submit such an adverse comment, were received within the comment period, the regulation would become effective on November 30, 2000. No adverse comments were received, and thus this notice confirms that this direct final rule will become effective on that date.

Issued in Kansas City, MO on September 12, 2000.

Richard L. Day,

Acting Manager, Air Traffic Division, Central Region.

[FR Doc. 00–24488 Filed 9–22–00; 8:45 am]

BILLING CODE 4910–13–M

DEPARTMENT OF TRANSPORTATION

Federal Aviation Administration

14 CFR Part 71

[Airspace Docket No. 00–AAL–4]

Revision of Class E Airspace; Ambler, AK

AGENCY: Federal Aviation Administration (FAA), DOT.

ACTION: Final rule.

SUMMARY: This action revises Class E airspace at Ambler, AK. The establishment of a Global Positioning System (GPS) instrument approach procedure to runway (RWY) 36 at Ambler, AK, made this action necessary. This rule provides adequate controlled airspace for aircraft flying Instrument Flight Rules (IFR) operations at Ambler, AK.

EFFECTIVE DATE: 0901 UTC, November 30, 2000.

FOR FURTHER INFORMATION CONTACT: Bob Durand, Operations Branch, Federal Aviation Administration, 222 West 7th Avenue, Box 14, Anchorage, AK 99513–7587; telephone number (907) 271–5898; fax: (907) 271–2850; email: Bob.Durand@faa.gov. Internet address: http://www.alaska.faa.gov/at or at address http://162.58.28.41/at.

SUPPLEMENTARY INFORMATION:

History

Only June 13, 2000, a proposal to amend part 71 of the Federal Aviation Regulations (14 CFR part 71) to revise the Class E airspace at Ambler, AK, was published in the **Federal Register** (65 FR 37089). The proposal was necessary due to establishment of the GPS instrument approach to RWY 36 at Ambler, AK.

Interested parties were invited to participate in this rulemaking proceeding by submitting written comments on the proposal to the FAA. No public comments to the proposal were received, thus, the rule is adopted as written.

The area will be depicted on aeronautical charts for pilot reference. The coordinates for this airspace docket are based on North American Datum 83. The Class E airspace areas designated as 700/1200 foot transition areas are published in paragraph 6005 of FAA Order 7400.9H, *Airspace Designations and Reporting Points*, dated September 1, 2000, and effective September 16, 2000, which is incorporated by reference in 14 CFR 71.1. The Class E airspace designations listed in this document will be revised and published subsequently in the Order.

The Rule

This amendment to 14 CFR part 71 revises Class E airspace at Ambler, AK, through the establishment of a GPS instrument approach to RWY 36. The area will be depicted on aeronautical charts for pilot reference. The intended effect of this rule is to provide adequate controlled airspace for IFR operations at Ambler, AK.

The FAA has determined that this proposed regulation only involves an established body of technical regulations for which frequent and routine amendments are necessary to keep them operationally current. It, therefore—(1) is not a ''significant regulatory action'' under Executive Order 12866; (2) is not a ''significant rule'' under DOT Regulatory Policies and Procedures (44 FR 11034; February 26, 1979); and (3) does not warrant preparation of a regulatory evaluation as the anticipated impact is so minimal. Since this is a routine matter that will only affect air traffic procedures and air navigation, it is certified that this rule, when promulgated, will not have a significant economic impact on a substantial number of small entities under the criteria of the Regulatory Flexibility Act.

List of Subjects in 14 CFR Part 71

Airspace, Incorporation by reference, Navigation (air).

Adoption of the Amendment

In consideration of the foregoing, the Federal Aviation Administration amends 14 CFR part 71 as follows:

PART 71—DESIGNATION OF CLASS A, CLASS B, CLASS C, CLASS D, AND CLASS E AIRSPACE AREAS; AIRWAYS; ROUTES; AND REPORTING POINTS

1. The authority citation for 14 CFR part 71 continues to read as follows:

Authority: 49 U.S.C. 106(g), 40103, 40113, 40120; E.O. 10854, 24 FR 9565, 3 CFR, 1959–1963 Comp., p. 389.

§ 71.1 [Amended]

2. The incorporation by reference in 14 CFR 71.1 of Federal Aviation Administration Order 7400.9H, *Airspace Designations and Reporting Points*, dated September 1, 2000, and effective September 16, 2000, is amended as follows:

* * * * *

Paragraph 6005 Class E airspace extending upward from 700 feet or more above the surface of the earth.

* * * * *

AAL AK E5 Ambler, AK [Revised]

Ambler Airport, AK
(Lat. 67°06′22″ N, long. 157°51′13″ N)
Ambler NDB
(Lat. 67°06′24″ N, long. 157°51′29″ W)

That airspace extending upward from 700 feet above the surface within a 6.3-mile radius of the Ambler Airport and within 3.5 miles each side of the 193° bearing of the Ambler NDB extending from the 6.3-mile radius to 7.2 miles southwest of the airport; and that airspace extending upward from 1,200 feet above the surface within 4 miles west and 8 miles east of the Ambler NDB 193° bearing extending from the NDB to 20 miles southwest of the NDB, and 4 miles either side of a line from lat. 66°20′57″ N long. 158°54′51″ W to lat. 66°56′52″ N long. 158°01′13″ W, and 4 miles either side of a line from lat. 66°51′40″ N long. 158°55′07″ W to lat. 66°56′52″ N long. 158°01′13″ W.

* * * * *

Issued in Anchorage, AK, on September 14, 2000.

Anthony M. Wylie,

Acting Manager, Air Traffic Division, Alaskan Region.

[FR Doc. 00–24487 Filed 9–22–00; 8:45 am]

BILLING CODE 4910–13–P

DEPARTMENT OF THE TREASURY

Bureau of Alcohol, Tobacco and Firearms

27 CFR Parts 270, 275, 290, 295, and 296

[T.D. ATF–429; Ref: T.D. ATF–424, T.D. ATF–424a, T.D. ATF–427 and Notice No. 889]

RIN 1512–AB92

Implementation of Public Law 105–33, Section 9302, Relating to the Imposition of Permit Requirements on the Manufacturer of Roll-Your-Own Tobacco (98R–370P)

AGENCY: Bureau of Alcohol, Tobacco and Firearms (ATF), Department of the Treasury.

ACTION: Final rule (Treasury decision).

SUMMARY: This final rule implements the provision of the Balanced Budget Act of 1997 requiring that manufacturers of roll-your-own tobacco obtain a permit. In addition to the permit requirements, this document addresses provisions for records, marks, labels and notices. In response to comments received, this final rule will allow manufacturers to mark packages with the term ''cigarette tobacco'' as an alternative to the terms ''roll-your-own tobacco'' or ''Class J''. Also, this final rule adopts without change most of the temporary rules of regarding roll-your-own tobacco published earlier.

DATES: Effective date: September 25, 2000.

FOR FURTHER INFORMATION CONTACT: Robert P. Ruhf, Regulations Division, 650 Massachusetts Avenue, NW., Washington, DC 20226; (202) 927–8210; or alc/tob@atfhq.atf.treas.gov.

SUPPLEMENTARY INFORMATION:

Background

This final rule implements the provision of the Balanced Budget Act of 1997, Public Law 105–33 (''the Act''), enacted on August 5, 1997 relating to roll-your-own tobacco. Section 9302 of the Act amended the Internal Revenue Code of 1986 (IRC), 26 U.S.C. 5701 and 5702 by imposing new permit requirements for manufacturers of roll-your-own tobacco. In addition to the

permit requirements, this final rule addresses provisions for records, marks, labels and notices.

Roll-Your-Own Tobacco

Roll-your-own tobacco is defined by 26 U.S.C. 5702(p) of the IRC to mean ''any tobacco which because of its appearance, type, packaging, or labeling, is suitable for use and likely to be offered to, or purchased by, consumers as tobacco for making cigarettes.'' Since the Act amended the definitions of the terms ''Tobacco products'' and ''Manufacturer of tobacco products'' to include roll-your-own tobacco, manufacturers of roll-your-own tobacco are subject to all the statutory and regulatory controls set forth in chapter 52 of IRC. These controls include tax payment, permit qualification, bonding, recordkeeping, marks, labels, notices, and civil and criminal sanctions.

On or after January 1, 2000, manufacturers of roll-your-own tobacco must apply for a permit to engage in the business of manufacturing roll-your-own tobacco. Section 9302(i)(2) of the Act also contains a transitional rule which allows those who, on the date of enactment, August 5, 1997, were engaged in the manufacture of roll-your-own tobacco and made an application for a permit prior to January 1, 2000, to continue to engage in such business pending final action on the application.

Concerning marks required on packages, the temporary regulations of T.D. ATF–424 (64 FR 71929) required that every package of roll-your-own tobacco must, before removal subject to tax, have imprinted thereon or on a label securely affixed to the package the designation ''roll-your-own tobacco,'' as well as a statement of the pounds and ounces of the product contained in the package. The temporary regulations provided ''Tax Class J'' as an alternative to the designation ''roll-your-own tobacco''. T.D. ATF–427 (65 FR 40050) extended the use-up rule to allow manufacturers and importers to continue using packages marked without the proper designation (''roll-your-own-tobacco'' or ''tax class J'') that were used before January 1, 2000. This decision allows manufacturers and importers to use up such packages until October 1, 2000. However, Treasury Decision ATF–427 did not extend the date for marking packages with the statement of pounds and ounces of roll-your-own tobacco. Manufacturers and importers have been required to place a statement of the pounds and ounces on packages of roll-your-own tobacco removed on and after April 1, 2000.

Technical Changes

In addition to the above changes, Treasury Decision ATF–424 made several technical changes. It revised the title of Part 270, removed references to obsolete forms, and renumbered other forms. Since Treasury Decision ATF–424 discussed these changes and ATF did not receive any comments about these technical changes, we are not discussing these technical changes in this final rule.

Notice of Proposed Rulemaking

On December 22, 1999, Notice 889 (64 FR 71935) was published in the **Federal Register** to request comments on the temporary regulations implemented by Treasury Decision ATF–424 (64 FR 71929). The deadline for comments was February 22, 2000.

Comments Received

ATF received comments from two different organizations.

Analysis of Comments

Alternate Designation for Roll-Your-Own Tobacco

The Pipe Tobacco Council, Washington, DC, stated that it represented domestic manufacturers and importers of roll-your-own tobacco who account for more than 90 percent of the current domestic sales of roll-your-own tobacco. This organization requested an extension of the deadline date from labeling packages as ''roll-your-tobacco'' for nine months. This extension was granted by Treasury Decision ATF–427 (65 FR 44050). In addition, the Pipe Tobacco Council proposed the alternate designation ''cigarette tobacco'' instead of using the designation of ''roll-your-own tobacco'' or ''Tax Class J'' for labeling packages.

In proposing the regulations at 27 CFR 275.72b that implemented this labeling requirement, we believed that allowing the use of this alternative designation would adequately protect the revenue by distinguishing the roll-your-own tobacco class from the other classes of tobacco products. It would also facilitate the relabeling of many tobacco products which are subject to tax but which are currently labeled with terms other than roll-your-own tobacco.

The Pipe Tobacco Council submitted samples of some of the popular brands of roll-your-own tobacco. None of these samples were labeled with the designation ''roll-your-own tobacco'', but most of these products currently use the designation ''cigarette tobacco'' on their packages. In addition, the Pipe Tobacco Council submitted a survey conducted by one of its members. The survey found that nine (9) brands of roll-your-own tobacco were labeled with the designation ''cigarette tobacco'', two brands used ''cigarette rolling tobacco'', and three other brands used other designations. However, none of the brands used ''roll-your-own tobacco'' as a designation. In conclusion, the Pipe Tobacco Council stated that most consumers of roll-your-own tobacco recognize the designation ''cigarette tobacco'' as a distinctive class.

In addition, the Pipe Tobacco Council cited the fact that we had allowed the use of the word ''little'' in place of the word ''small'' on packages of cigars (refer to 27 CFR 270.214(c)). Even though the law only refers to small cigars, we had allowed this alternate designation to be placed on packages of such cigars.

The Pipe Tobacco Council provided estimated costs that a manufacturer or importer would spend to comply with marking ''Tax Class J'' or ''roll-your-own tobacco'' on packages. It estimated that a manufacturer or importer would have to spend between $13,000 to $22,000 per brand of roll-your-own tobacco to place the designation ''Tax Class J'' on such packages and between $33,000 to $50,000 per brand of roll-your-own tobacco to place the designation ''roll-your-own tobacco'' on such packages.

We believe that there would be no jeopardy to the revenue to allow such products to be designated ''cigarette tobacco.'' First, we believe that the term ''cigarette tobacco'' is an accurate description of this tobacco product. It has been a standard term used by many roll-your-own manufacturers and importers and recognized by consumers. Second, the use of the term ''cigarette tobacco'' follows the same logic in describing the use of the tobacco product as the term ''pipe tobacco.'' Pipe tobacco is suitable to be smoked in a pipe. Roll-your-own tobacco by its definition is suitable for making cigarettes. Third, we do not anticipate any administrative problems for ATF or Customs if the designation ''cigarette tobacco'' is marked on packages (that is, the immediate container for sale or delivery to the consumer) as opposed to the alternative designations. Fourth, we recognize the considerable cost and time for manufacturers and importers if we only allowed the markings of ''roll-your-own tobacco'' or ''tax class J'' to be placed on their many brands of this tobacco product. Fifth, it is consistent with past practice since we have allowed the use of ''little cigars'' as an alternate marking for small cigars. Accordingly, we have amended the regulations to allow such products to be designated as ''cigarette tobacco'' as an

alternative to marking such products as ''roll-your-own tobacco'' or ''tax class J.''

Permit Requirements

The Friends of Tobacco, Pink Hill, NC, gave comments about the requirement that persons must have a permit to engage in the business manufacturing roll-your-own tobacco. The Friends of Tobacco stated that it is a national, non-profit organization representing farmers, small businesses, retailers, wholesalers and allied industries associated with tobacco. This organization stated that the proposed regulation will cause small business closings, reduce competition and restrict business to a few large corporations.

The law (26 U.S.C. 5713) clearly states that a manufacturer of roll-your-own tobacco must have a permit to engage in this business. While we understand that this may impose burdens on the manufacturers of roll-your-own tobacco, the law is clear and provides no room for exceptions. Moreover, we do not believe that this regulation will prevent small businesses from operating.

There are costs involved with applying for a permit, getting a surety bond to ensure payment of tax, and the paperwork (records, inventories, reports, and tax returns) that must be maintained or filed. However, the costs should not keep most small businesses from operating as roll-your-own manufacturers. For example, there are many small cigar businesses who operate successfully as manufacturers of tobacco products and hundreds of small wineries and breweries who successfully operate under similar permit requirements.

We believe that the current requirements to become a manufacturer of tobacco products, including roll-your-own, are minimal but are necessary to protect the revenue. The application process ensures that only persons who are qualified may obtain a permit to operate as a tobacco products manufacturer. A person who will operate as a tobacco products manufacturer must also have a bond which ensures payment of taxes. The bond can be given by a corporate surety, cash or securities of the United States. The amount that needs to be covered ranges from a minimum of $1,000 to a maximum of $250,000. Most small companies can secure this coverage or put up cash or securities. We do not believe that the required paperwork will place an undue burden on small businesses who operate as roll-your-own manufacturers.

Most of the records required for a manufacturer are presently kept by small businesses for other purposes as part of their commercial records. ATF requires that a manufacturer inventory tobacco products, in this case roll-your-own tobacco, at the beginning and conclusion of business and at the request of ATF. The inventory requirement is based on the need to be able to determine the amount of taxable tobacco product on hand at a manufacturer. These inventories are not overly burdensome and are necessary to protect the revenue. In addition, ATF requires manufacturers to file semi-monthly tax returns and monthly reports. These records are necessary to protect the revenue. However, ATF within certain conditions may allow a variance from these recordkeeping requirements to accommodate the needs of small businesses. For example, ATF may grant a variance relieving a manufacturer from filing semi-monthly tax returns where no tax is due or payable or a variance from filing monthly reports where no reportable activity occurs.

The Friends of Tobacco requested that we grant permits to all roll-your-own manufacturers who were in business before January 1, 2000. We are bound by the provisions of Section 9302(i)(2) of the Balanced Budget Act of 1997. This section allows only persons who were engaged in business as a manufacturer of roll-your-own tobacco on or before August 5, 1997 and who applied for a permit before January 1, 2000, to continue operating pending final action on their application. All other persons must apply for, and obtain, a permit to manufacturer tobacco before commencing such operations. ATF has and will continue to make every effort to process all such permit applications in a timely and expedient manner.

Temporary Regulations Adopted as Final

Except as discussed above, this final rule adopts the temporary regulations, T.D. ATF–424 (64 FR 71929), T.D. ATF–424a (65 FR 31079) and T.D. ATF–427 (65 FR 40050), to implement the permit requirements for manufacturers of roll-your-own tobacco and related requirements for marks, labels and notices under the Balanced Budget Act of 1997 (111 Stat. 251). The following is a list of sections in the temporary regulations that are adopted without change.

Part 270

The heading of Part 270, authority citation, §§ 270.11, 270.61a, 270.61b, 270.133, 270.181, 270.182, 270.183, 270.201, 270.202, 270.216a, 270.216c, 270.231, 270.252, 270.255, 270.311, 270.476.

Part 275

The authority citation, §§ 275.11, 275.81, 275.86, 275.107, 275.110, 275.121, 275.139, 275.140, 275.141, 275.170, 275.172.

Part 290

The authority citation, §§ 290.11, 290.143, 290.147, 290.222, 290.224, 290.225, 290.226, 290.227, 290.232.

Part 295

The authority citation, §§ 295.11, 295.45c.

Part 296

The authority citation, §§ 296.72, 296.74, 296.163.

Regulatory Flexibility Act

In accordance with the provisions of the Regulatory Flexibility Act (5 U.S.C. 601 *et seq.*) it is hereby certified that this regulation will not have a significant economic impact on a substantial number of small entities. The revenue effects of the roll-your-own requirements on small businesses flow directly from the underlying statute. Likewise, any secondary or incidental effects, and any reporting, recordkeeping, or other compliance burdens flow directly from the statute. A copy of the proposed and temporary rules were submitted to the Chief Counsel for Advocacy of the Small Business Administration for comment as provided for in 26 U.S.C. 7805(f). No comments were received.

Executive Order 12866

It has been determined that this final rule is not a significant regulatory action as defined by Executive Order 12866. Therefore, a regulatory assessment is not required.

Paperwork Reduction Act

The collections of information contained in this final rule have been reviewed and approved under the requirements of the Paperwork Reduction Act of 1995 (44 U.S.C. 3507(d)). No public comments were received. The Office of Management and Budget (OMB) has issued control numbers 1512–0358 and 1512–0502 for the collections of information. An agency may not conduct or sponsor, and a person is not required to respond to, a collection of information unless it displays a valid control number assigned by OMB.

The collection of information in this proposed regulation is in 27 CFR 270.182, 270.183, 270.216b, 275.72b,

and 295.45b. This information is required to ensure proper payment of excise taxes on roll-your-own tobacco products. We use this information to determine whether or not such excise taxes have been properly paid. The collection of information is mandatory. The likely respondents include small businesses or organizations.

We estimate that the total annual reporting and/or recordkeeping burden under control numbers 1512–0358 and 1512–0502 for the first year is 385 hours for initiating and obtaining required permits. For subsequent years, the total annual reporting/recordkeeping burden under 1512–0358 is 1,650 hours and under 1512–0502 the burden is 1 hour. Under 1512–0358 we estimate the burden at 11 additional respondents with an additional 150 hours burden per respondent. Under 1512–0502 we have estimated an additional 11 recordkeepers and for all respondents a total burden of 1 hour.

Administrative Procedure Act

This final rule is issued in accordance with the Administrative Procedures Act (5 U.S.C. 553). It is exempt from the effective date provisions of 5 U.S.C. 553(d) because immediate guidance is necessary to inform manufacturers and importers of the revised regulations, which allow an alternative designation of ''cigarette tobacco'' to be marked on packages of roll-your-own tobacco, and because the revised regulations relieves a restriction by providing this alternative designation.

Drafting Information

The principal author of this document is Robert Ruhf, of the Regulations Division, Bureau of Alcohol, Tobacco and Firearms.

List of Subjects

27 CFR Part 270

Administrative practice and procedure, Authority delegations, Cigars and cigarettes, Claims, Electronic funds transfer, Excise taxes, Labeling, Packaging and containers, Penalties, Reporting requirements, Seizures and forfeitures, Surety bonds, Tobacco.

27 CFR Part 275

Administrative practice and procedure, Authority delegations, Cigars and cigarettes, Claims, Electronic funds transfer, Customs duties and inspection, Excise taxes, Imports, Labeling, Packaging and containers, Penalties, Reporting requirements, Seizures and forfeitures, Surety bonds, Tobacco, Warehouses.

27 CFR Part 290

Administrative practice and procedure, Aircraft, Authority delegations, Cigars and cigarettes, Claims, Customs duties and inspection, Excise taxes, Exports, Foreign trade zones, Labeling, Packaging and containers, Penalties, Surety bonds, Tobacco, Vessels, Warehouses.

27 CFR Part 295

Administrative practice and procedure, Authority delegations, Cigars and cigarettes, Excise taxes, Labeling, Packaging and containers, Tobacco.

27 CFR Part 296

Authority delegations, Cigars and cigarettes, Claims, Disaster assistance, Excise taxes, Penalties, Seizures and forfeitures, Surety bonds, Tobacco.

Authority and Issuance

Accordingly, the temporary regulations published in T.D. ATF–424 (December 22, 1999, 64 FR 71929) as amended by T.D. ATF–424a (May 16, 2000, 65 FR 31079) and T.D. ATF–427 (June 29, 2000, 65 FR 40050) are adopted as final with the following changes.

PART 270—MANUFACTURE OF TOBACCO PRODUCTS

Paragraph 1. The authority citation for 27 CFR Part 270 continues to read as follows:

Authority: 26 U.S.C. 5142, 5143, 5146, 5701, 5703–5705, 5711–5713, 5721–5723, 5731, 5741, 5751, 5753, 5761–5763, 6061, 6065, 6109, 6151, 6301, 6302, 6311, 6313, 6402, 6404, 6423, 6676, 6806, 7011, 7212, 7325, 7342, 7502, 7503, 7606, 7805; 31 U.S.C. 9301, 9303, 9304, 9306.

Par. 2. Section 270.216b is revised to read as follows:

§ 270.216b Notice for roll-your-own tobacco.

(a) *Product designation.* Before removal subject to tax, roll-your-own tobacco must have adequately imprinted on, or on a label securely affixed to, the package, the designation ''roll-your-own tobacco'' or ''cigarette tobacco'' or ''Tax Class J.''

(b) *Product weight.* Before removal subject to tax, roll-your-own tobacco must have a clear statement of the actual weight in pounds and ounces of the product in the package. This statement must be adequately imprinted on, or on a label securely affixed to, the package. (Approved by the Office of Management and Budget under control number 1512–0502)

PART 275—IMPORTATION OF TOBACCO PRODUCTS AND CIGARETTE PAPERS AND TUBES

Par. 3. The authority citation for 27 CFR Part 275 continues to read as follows:

Authority: 18 U.S.C. 2342, 26 U.S.C. 5701, 5703, 5704, 5705, 5708, 5712, 5713, 5721, 5722, 5723, 5741, 5754, 5761, 5762, 5763, 6301, 6302, 6313, 6404, 7101, 7212, 7342, 7606, 7652, 7805; 31 U.S.C. 9301, 9303, 9304, 9306.

Par. 4. Section 275.72b is revised to read as follows:

§ 275.72b Notice for roll-your-own tobacco.

(a) *Product designation.* Before removal subject to tax, roll-your-own tobacco must have adequately imprinted on, or on a label securely affixed to, the package, the designation ''roll-your-own tobacco'' or ''cigarette tobacco'' or ''Tax Class J.''

(b) *Product weight.* Before removal subject to tax, roll-your-own tobacco must have a clear statement of the actual weight in pounds and ounces of the product in the package. This statement must be adequately imprinted on, or on a label securely affixed to, the package. (Approved by the Office of Management and Budget under control number 1512–0502)

* * * * *

PART 295—REMOVAL OF TOBACCO PRODUCTS AND CIGARETTE PAPERS AND TUBES, WITHOUT PAYMENT FOR USE OF THE UNITED STATES

Par. 5. The authority citation for 27 CFR Part 295 continues to read as follows:

Authority: 26 U.S.C. 5703, 5704, 5705, 5723, 5741, 5751, 5762, 5763, 7212, 7342, 7606, 7805, 44 U.S.C. 3504(h).

Par. 6. Section 295.45b is revised to read as follows:

§ 295.45b Notice for roll-your-own tobacco.

(a) *Product designation.* Before removal subject to tax, roll-your-own tobacco must have adequately imprinted on, or on a label securely affixed to, the package, the designation roll-your-own tobacco'' or ''cigarette tobacco'' or ''Tax Class J.''

(b) *Product weight.* Before removal subject to tax, roll-your-own tobacco must have a clear statement of the actual weight in pounds and ounces of the product in the package. This statement must be adequately imprinted on, or on a label securely affixed to, the package. (Approved by the Office of Management

and Budget under control number 1512–0502)

* * * * *

Dated: July 26, 2000.

Bradley A. Buckles,

Director.

Approved: August 3, 2000.

John P. Simpson,

Deputy Assistant Secretary (Regulatory, Tariff and Trade Enforcement).

[FR Doc. 00–24121 Filed 9–22–00; 8:45 am]

BILLING CODE 4810–31–P

DEPARTMENT OF AGRICULTURE

Forest Service

36 CFR Part 230

Urban and Community Forestry Assistance Program

AGENCY: Forest Service, USDA.

ACTION: Interim final rule; request for comment.

SUMMARY: The Department is amending regulations on State and private forestry assistance to implement the Urban and Community Forestry Assistance Program as authorized by the Cooperative Forestry Assistance Act of 1978. This law authorizes the Secretary of Agriculture to provide financial, technical, and related assistance to State Foresters or equivalent State officials, as well as non-profit organizations and individuals. The Urban and Community Forestry Assistance Program is implemented through the Forest Service Manual Forest Service Grants, Cooperative Agreements, and Other Agreements Program and the Grants, Cooperative Agreements, and Other Agreements Handbook.

DATES: This rule is effective September 25, 2000. Written comments must be received by October 25, 2000.

ADDRESSES: All comments should be addressed to: Fred Deneke, Cooperative Forestry Staff (Mail Stop 1123), State and Private Forestry, Forest Service, USDA, P.O. Box 96090, Washington, DC 20090–6090.

Comments may be submitted via email to lparris@fs.fed.us. Comments also may be submitted via facsimile to (202) 205–1271. All comments, including names and addresses, when provided, will be placed in the public record and are made available for public inspection and copying.

FOR FURTHER INFORMATION CONTACT: Luz Parris-Sweetland, Cooperative Forestry Staff, telephone (202) 205–1695.

SUPPLEMENTARY INFORMATION:

Background

The Department of Agriculture is amending part 230 of Title 36 of the Code of Federal Regulations to implement the Urban and Community Forestry Assistance Program, as authorized by Section 9 of the Cooperative Forestry Assistance Act of 1978 (16 U.S.C. 2105). The law authorizes the Secretary of Agriculture to provide financial, technical, and related assistance to State Foresters or equivalent State officials, as well as non-profit organizations and individuals for cooperative urban forestry efforts. States are encouraged to provide information and technical assistance to local government units and others to plan urban forestry programs and to plant, protect, maintain, and utilize wood from trees in open spaces, greenbelts, roadside screens, parks, woodlands, curb areas, and residential developments in urban areas. The Forest Service is providing this assistance through its grants and agreements program.

Guidelines for the program are included in the document entitled, Urban and Community Forestry Program Direction. The document may be obtained by writing to the address in the **ADDRESSES** section.

Just Cause Statement

Because the purpose of this rule is to set forth the authority and identify the guidance used to implement the Urban and Cooperative Forestry Assistance Program and the Urban Resources Partnership initiative, the agency has determined that delay in codifying this rule to allow for a public comment period of a proposed rulemaking is unnecessary and contrary to the public interest. Furthermore, the agency believes that the identification of such authority and guidance is not controversial. Accordingly, this rule is issued as an interim final rule, effective upon the date of publication in the **Federal Register.** The public may provide comment on this interim final rule during the comment period as noted in the information provided in the **DATES** and **ADDRESSES** sections.

Section by Section Description of the Interim Final Rule

Section 230.20 Scope and Authority

Section 9 of the Cooperative Forestry Assistance Act of 1978 authorizes the Forest Service to provide financial, technical, and related assistance to State Foresters or equivalent State officials, as well as non-profit organizations and individuals, to implement the Urban and Community Forestry Assistance Program. This assistance promotes cooperative efforts to plan urban forestry programs designed to: maintain, expand, and preserve forest and tree cover; expand research and education efforts related to trees and forest cover, enhance technical skills and understanding of tree maintenance and practices involving cultivation of trees, shrubs, and complementary ground covers; and implement a tree planting program to complement urban tree maintenance and open space programs.

The Forest Service, under the authority of the Cooperative Forestry Assistance Act of 1978 and through the Urban and Community Forestry Assistance Program, coordinates financial, technical, and related assistance with the Natural Resources Conservation Service, another agency of the Department of Agriculture, for the Urban Resources Partnership initiative.

Section 230.21 Implementation of the Program

The Urban and Community Forestry Assistance Program is implemented through the Forest Service Grants, Cooperative Agreements, and Other Agreements Program (FSM 1580) and the Grants, Cooperative Agreements, and Other Agreements Handbook (FSH 1509.11), which provide a mechanism for processing grants and cooperative agreements.

In addition, the Forest Service coordinates the financial and technical assistance provided under the Urban Resources Partnership initiative with the Natural Resources Conservation Service. The Urban Resources Partnership initiative is intended to help enhance the Nation's urban environment and quality of life through the provision of Federal assistance to, and cooperation with, State and local governments, non-profit organizations, and others. Urban Resources Partnership activities are designed to focus on urban natural resource conservation; provide assistance in under-served areas of communities with limited resources; foster intergovernmental coordination and public-private partnerships, and build capacity by local groups in accessing and properly managing Federal financial and resource assistance. The Forest Service and Natural Resources Conservation Service implement the Urban Resources Partnership under the guidance provided in the Urban Resources Partnership National Guidance for U.S. Department of Agriculture Personnel and applicable agency and departmental procedures for Federal grants and agreements. Comment is invited on this interim rule

as well as on the Urban Resources Partnership National Guidance, which is posted on the agency's website on the worldwide web at *http://www.fs.fed.us.*

Regulatory Impact

This interim final rule has been reviewed under USDA procedures and Executive Order 12866 on Regulatory Planning and Review. It has been determined that this is not a significant rule. This interim final rule will not have an annual effect of $100 million or more on the economy nor adversely affect productivity, competition, jobs, the environment, public health or safety, nor State or local governments. Also, this rule will not interfere with an action taken or planned by another agency or raise new legal or policy issues. In short, little or no effect on the national economy will result from this interim final rule. Finally, this action will not alter the budgetary impact of entitlements, grants, user fees, or loan programs or the rights and obligations of recipients of such programs. Accordingly, this interim final rule is not subject to OMB review under Executive order 12866.

Moreover, this interim final rule has been considered in light of the Regulatory Flexibility Act (5 U.S.C. 601 *et seq.*), and it has been determined that this action will not have a significant economic impact on a substantial number of small entities as defined by that Act.

Unfunded Mandates Reform

Pursuant to Title II of the Unfunded Mandates Reform Act of 1995 (2 U.S.C. 1531–1538), the Department has assessed the effects of this interim final rule on State, local, and tribal governments and the private sector. Therefore, a statement under section 202 of the Act is not required.

Environmental Impacts

Section 31.b of Forest Service Handbook 1909.15 (57 FR 43180: September 18, 1992) excludes from documentation in an environmental assessment or impact statement rules, regulations, or policies to establish Service-wide administrative procedures, program processes, or instructions. The agency's assessment is that this interim final rule falls within this category of actions and that no extraordinary circumstances exist which would require preparation of an environmental assessment or environmental impact statement.

Takings Implications

This interim final rule has been analyzed in accordance with the principles and criteria contained in Executive Order 12630 and it has been determined that the rule does not pose the risk of a taking of Constitutionally-protected private property.

Controlling Paperwork Burdens on the Public

This interim final rule does not contain any recordkeeping or reporting requirements or other information collection requirements as defined in 5 CFR part 1320 and, therefore, imposes no paperwork burden on the public. Accordingly, the review provisions of the Paperwork Reduction Act of 1995 (44 U.S.C. 3501, *et seq.*) and implementing regulations at 5 CFR part 1320 do not apply.

List of Subjects in 36 CFR Part 230

Forests and forest products, Grant programs—natural resources, Intergovernmental relations, Reporting and recordkeeping requirements.

Therefore, for the reasons set forth in the preamble, Part 230 of Title 36 of the Code of Federal Regulations is amended as follows:

PART 230—STATE AND PRIVATE FORESTRY ASSISTANCE

1. Revise the authority section for part 230 to read as follows:

Authority: 16 U.S.C. 2103b, 2105, 2114.

2. Add a new subpart B to read as follows:

Subpart B—Urban and Community Forestry Assistance Program

Sec.
230.20 Scope and authority.
230.21 Implementation of the program.

Subpart B—Urban and Community Forestry Assistance Program

§ 230.20 Scope and authority.

The Urban and Community Forestry Assistance Program is authorized by Section 9 of the Cooperative Forestry Assistance Act of 1978, as amended (16 U.S.C. 2105). The scope of this authority includes the provision of technical, financial, and related assistance to State and local governments, non-profits, and other members of the public to: maintain, expand, and preserve forest and tree cover; expand research and education efforts related to trees and forest cover; enhance technical skills and understanding of tree maintenance and practices involving cultivation of trees, shrubs and complementary ground covers; and implementing a tree planting program to complement urban tree maintenance and open space programs. The Secretary has delegated the authority for implementing the program to the Chief of the Forest Service under 7 CFR 2.60(a)(16).

§ 230.21 Implementation of the program.

(a) The Urban and Community Forestry Assistance Program is implemented through the Forest Service Grants, Cooperative Agreements, and Other Agreements Program (FSM 1580) and the Grants, Cooperative Agreements, and Other Agreements Handbook (FSH 1509.11). The Forest Service Manual and Handbook are available from the Forest Service internet homepage or at National Forest offices.

(b) The Forest Service, under the authority of the Cooperative Forestry Assistance Act of 1978 and through the Urban and Community Forestry Assistance Program, coordinates financial, technical, and related assistance with the Natural Resources Conservation Service for the Urban Resources Partnership initiative. The Natural Resources Conservation Service provides similar assistance through the Urban Resources Partnership initiative under the authority of the Soil Conservation and Domestic Allotment Act (16 U.S.C. 590a–590f). The Urban Resources Partnership is an initiative in which Federal agencies, in cooperation with State and local agencies, community groups, and non-governmental organizations endeavor to be more effective, responsive, and efficient in working together to protect, improve, and rehabilitate the environment in urban areas of the Nation. The Forest Service and Natural Resources Conservation Service implement the Urban Resources Partnership initiative under the ''Urban Resources Partnership National Guidance for U.S. Department of Agriculture Personnel'' and applicable agency and departmental procedures for Federal grants and cooperative agreements. Copies of the Guidance may be obtained from the Cooperative Forestry Staff, Forest Service, USDA, P.O. Box 96090, Washington, DC 20090–6090.

Dated: September 19, 2000.

James R. Lyons,

Under Secretary, Natural Resources and the Environment.

[FR Doc. 00–24564 Filed 9–22–00; 8:45 am]

BILLING CODE 3410–11–M

ENVIRONMENTAL PROTECTION AGENCY

40 CFR Part 180

[OPP–301042; FRL–6741–1]

RIN 2070–2078

Mefenoxam; Pesticide Tolerances for Emergency Exemptions

AGENCY: Environmental Protection Agency (EPA).

ACTION: Final rule.

SUMMARY: This regulation establishes a time–limited tolerance for mefenoxam in or on canola. This action is in response to EPA's granting of an emergency exemption under section 18 of the Federal Insecticide, Fungicide, and Rodenticide Act authorizing use of the pesticide on canola. This regulation establishes a maximum permissible level for residues of mefenoxam in this food commodity. The tolerance will expire and is revoked on December 31, 2001.

DATES: This regulation is effective September 25, 2000. Objections and requests for hearings, identified by docket control number OPP–301042, must be received by EPA on or before November 24, 2000.

ADDRESSES: Written objections and hearing requests may be submitted by mail, in person, or by courier. Please follow the detailed instructions for each method as provided in Unit VII. of the **SUPPLEMENTARY INFORMATION.** To ensure proper receipt by EPA, your objections and hearing requests must identify docket control number OPP–301041 in the subject line on the first page of your response.

FOR FURTHER INFORMATION CONTACT: By mail: Dan Rosenblatt, Registration Division (7505C), Office of Pesticide Programs, Environmental Protection Agency, 1200 Pennsylvania Ave., NW., Washington, DC 20460; telephone number:(703) 308–9375 and e-mail address: rosenblatt.dan@;epa.gov.

SUPPLEMENTARY INFORMATION:

I. General Information

A. Does this Action Apply to Me?

You may be potentially affected by this action if you are an agricultural producer, food manufacturer, or pesticide manufacturer. Potentially affected categories and entities may include, but are not limited to:

Categories	NAICS codes	Examples of Potentially Affected Entities
Industry	111	Crop production
	112	Animal production
	311	Food manufacturing
	32532	Pesticide manufacturing

This listing is not intended to be exhaustive, but rather provides a guide for readers regarding entities likely to be affected by this action. Other types of entities not listed in the table could also be affected. The North American Industrial Classification System (NAICS) codes have been provided to assist you and others in determining whether or not this action might apply to certain entities. If you have questions regarding the applicability of this action to a particular entity, consult the person listed under **FURTHER INFORMATION CONTACT.**

B. How Can I Get Additional Information, Including Copies of This Document and Other Related Documents?

1. *Electronically.* You may obtain electronic copies of this document, and certain other related documents that might be available electronically, from the EPA Internet Home Page at http://www.epa.gov/. To access this document, on the Home Page select ''Laws and Regulations,'' ''Regulations and Proposed Rules,'' and then look up the entry for this document under the ''**Federal Register**—Environmental Documents.'' You can also go directly to the **Federal Register** listings at http://www.epa.gov/fedrgstr/.

2. *In person.* The Agency has established an official record for this action under docket control number OPP–301042. The official record consists of the documents specifically referenced in this action, and other information related to this action, including any information claimed as Confidential Business Information (CBI). This official record includes the documents that are physically located in the docket, as well as the documents that are referenced in those documents. The public version of the official record does not include any information claimed as CBI. The public version of the official record, which includes printed, paper versions of any electronic comments submitted during an applicable comment period is available for inspection in the Public Information and Records Integrity Branch (PIRIB), Rm. 119, Mall #2, 1921 Jefferson Davis Hwy., Arlington, VA, from 8:30 a.m. to 4 p.m., Monday through Friday, excluding legal holidays. The PIRIB telephone number is (703) 305–5805.

II. Background and Statutory Findings

EPA, on its own initiative, in accordance with sections 408(e) and 408 (l)(6) of the Federal Food, Drug, and Cosmetic Act (FFDCA), 21 U.S.C. 346a, is establishing a tolerance for the seed treatment mefenoxam, in or on canola at 0.05 part per million (ppm). This tolerance will expire and is revoked on December 31, 2001. EPA will publish a document in the **Federal Register** to remove the revoked tolerance from the Code of Federal Regulations.

Section 408(l)(6) of the FFDCA requires EPA to establish a time–limited tolerance or exemption from the requirement for a tolerance for pesticide chemical residues in food that will result from the use of a pesticide under an emergency exemption granted by EPA under section 18 of FIFRA. Such tolerances can be established without providing notice or period for public comment. EPA does not intend for its actions on section 18 related tolerances to set binding precedents for the application of section 408 and the new safety standard to other tolerances and exemptions. Section 408(e) of the FFDCA allows EPA to establish a tolerance or an exemption from the requirement of a tolerance on its own initiative, i.e., without having received any petition from an outside party.

Section 408(b)(2)(A)(i) of the FFDCA allows EPA to establish a tolerance (the legal limit for a pesticide chemical residue in or on a food) only if EPA determines that the tolerance is ''safe.'' Section 408(b)(2)(A)(ii) defines ''safe'' to mean that ''there is a reasonable certainty that no harm will result from aggregate exposure to the pesticide chemical residue, including all anticipated dietary exposures and all other exposures for which there is reliable information.'' This includes exposure through drinking water and in

residential settings, but does not include occupational exposure. Section 408(b)(2)(C) requires EPA to give special consideration to exposure of infants and children to the pesticide chemical residue in establishing a tolerance and to ''ensure that there is a reasonable certainty that no harm will result to infants and children from aggregate exposure to the pesticide chemical residue.''

Section 18 of the FIFRA authorizes EPA to exempt any Federal or State Agency from any provision of FIFRA, if EPA determines that ''emergency conditions exist which require such exemption.'' This provision was not amended by the Food Quality Protection Act (FQPA). EPA has established regulations governing such emergency exemptions in 40 CFR part 166.

III. Emergency Exemption for mefenoxam on canola and FFDCA Tolerances

EPA has authorized under FIFRA section 18 the use of mefenoxam on canola seed for control of seed borne diseases in canola seed. EPA was petitioned for the use of a product that contains mefenoxam as one of its active ingredients under section 18 of FIFRA. After having reviewed the submission, EPA granted the emergency use.

As part of its assessment of this emergency exemption, EPA assessed the potential risks presented by residues of mefenoxam in or on canola. In doing so, EPA considered the safety standard in FFDCA section 408(b)(2), and EPA decided that the necessary tolerance under FFDCA section 408(l)(6) would be consistent with the safety standard and with FIFRA section 18. Consistent with the need to move quickly on the emergency exemption in order to address an urgent non–routine situation and to ensure that the resulting food is safe and lawful, EPA is issuing this tolerance without notice and opportunity for public comment as provided in section 408(l)(6). Although this tolerance will expire and is revoked on December 31, 2001, under FFDCA section 408(l)(5), residues of the pesticide not in excess of the amounts specified in the tolerance remaining in or on canola after that date will not be unlawful, provided the pesticide is applied in a manner that was lawful under FIFRA, and the residues do not exceed a level that was authorized by this tolerance at the time of that application. EPA will take action to revoke this tolerance earlier if any experience with, scientific data on, or other relevant information on this pesticide indicate that the residues are not safe.

Because this tolerance is being approved under emergency conditions, EPA has not made any decisions about whether mefenoxam meets EPA's registration requirements for use on canola or whether a permanent tolerance for this use would be appropriate. Under these circumstances, EPA does not believe that this tolerance serves as a basis for registration of mefenoxam by a State for special local needs under FIFRA section 24(c). Nor does this tolerance serve as the basis for any State to use this pesticide on this crop under section 18 of FIFRA without following all provisions of EPA's regulations implementing section 18 as identified in 40 CFR part 166. For additional information regarding the emergency exemption for mefenoxam, contact the Agency's Registration Division at the address provided under **FOR FURTHER INFORMATION CONTACT.**

IV. Aggregate Risk Assessment and Determination of Safety

EPA performs a number of analyses to determine the risks from aggregate exposure to pesticide residues. For further discussion of the regulatory requirements of section 408 and a complete description of the risk assessment process, see the final rule on Bifenthrin Pesticide Tolerances November 26, 1997 (62 FR 62961) (FRL–5754–7).

Consistent with section 408(b)(2)(D), EPA has reviewed the available scientific data and other relevant information in support of this action. EPA has sufficient data to assess the hazards of mefenoxam and to make a determination on aggregate exposure, consistent with section 408(b)(2), for a time–limited tolerance for mefenoxam in or on canola at 0.05 ppm.

Mefenoxam is predominantly the R–enantiomer (94:3 ratio of R– to S–enantiomers) of the racemic mixture of the fungicide metalaxyl. Metalaxyl is a 50:50 combination of the R– and S–enantiomers. In reaching regulatory decisions on mefenoxam, EPA reviewed data which bridges environmental fate, chemistry, and toxicology studies between metalaxyl and mefenoxam. EPA's assessment of the dietary exposures and risks associated with establishing the tolerance follows.

A. Toxicological Endpoints

The dose at which no observed adverse effects are observed (NOAEL) from the toxicology study identified as appropriate for use in risk assessment is used to estimate the toxicological endpoint. However, the lowest dose at which adverse effects of concern are identified (LOAEL) is sometimes used for risk assessment if no NOAEL was achieved in the toxicology study selected. An uncertainty factor (UF) is applied to reflect uncertainties inherent in the extrapolation from laboratory animal data to humans and in the variations in sensitivity among members of the human population as well as other unknowns. An UF of 100 is routinely used, 10X to account for interspecies differences and 10X for intra species differences.

For dietary risk assessment (other than cancer) the Agency uses the UF to calculate an acute or chronic reference dose (acute RfD or chronic RfD) where the RfD is equal to the NOAEL divided by the appropriate UF (RfD=NOAEL/UF). Where an additional safety factor is retained due to concerns unique to the FQPA, this additional factor is applied to the RfD by dividing the RfD by such additional factor. The acute or chronic Population Adjusted Dose (aPAD or cPAD) is a modification of the RfD to accommodate this type of FQPA Safety Factor.

For non–dietary risk assessments (other than cancer) the UF is used to determine the level of concern (LOC). For example, when 100 is the appropriate UF (10X to account for interspecies differences and 10X for intraspecies differences) the LOC is 100. To estimate risk, a ratio of the NOAEL to exposures (margin of exposure (MOE)=NOAEL/exposure) is calculated and compared to the LOC.

The linear default risk methodology (Q*) is the primary method currently used by the Agency to quantify carcinogenic risk. The Q* approach assumes that any amount of exposure will lead to some degree of cancer risk. A Q* is calculated and used to estimate risk which represents a probability of occurrence of additional cancer cases (e.g., risk is expressed as 1×10^{-6} or one in a million). Under certain specific circumstances, MOE calculations will be used for the carcinogenic risk assessment. In this non–linear approach, a ''point of departure'' is identified below which carcinogenic effects are not expected. The point of departure is typically a NOAEL based on an endpoint related to cancer effects though it may be a different value derived from the dose response curve. To estimate risk, a ratio of the point of departure to exposure (MOE_{cancer} =point of departure/exposures) is calculated. The doses and toxicological endpoints selected and the LOC for margins of exposure for various exposure senarios are summarized in the following Table 1:

TABLE 1.—SUMMARY OF TOXICOLOGICAL DOSE AND ENDPOINTS FOR MEFENOXAM AND METALAXYL FOR USE IN HUMAN RISK ASSESSMENT

Exposure scenario	Dose used in risk assessment, UF	FQPA SF* and level of concern for risk assessment	Study and toxicological effects
Acute dietary females 13–50 years of age	None	None	
Acute dietary general population including infants and children	None	None	
Chronic dietary all populations	NOAEL = 7.4 mg/kg/day UF = 100 Chronic RfD = 0.074 mg/kg/day	FQPA SF = 3 cPAD = chronic RfD FQPA SF = 0.025 mg/kg/day	6 month feeding study – dogs LOAEL = 32.4 mg/kg/day based on increased alkaline phosphatase and increased absolute and relative liver weight.
Short–term dermal (1 to 7 days) (1 to 7 days (Residential)	None	None	
Interme diate–term Dermal (1 week to several months) (Residential)	None.	None.	
Long–term dermal (several months to lifetime) (Residential)	dermal (or oral) study NOAEL= 7.4 mg/kg/day (dermal absorption rate = 30% when appropriate)	LOC for MOE = 100 (Residential)	6 month feeding study – dogs LOAEL = 32.4 mg/kg/day based on increased alkaline phosphatase and increased absolute and relative liver weight.
Short–term Inhalation (1 to 7 days) (Residential)	None	None	
Interme diate–term Inhalation (1 week to several months) (Residential)	None	None	
Long–term Inhalation (several months to lifetime) (Residential)	None	None	
Cancer (oral, dermal, inhalation)			The carcinogenicity study in mice and combined chronic toxicity/carcinogenicity study in rats suggest metalaxyl is best considered for EPA Group E (''not likely to be carcinogenic in humans'')

The reference to the FQPA Safety Factor refers to any additional safety factor retained due to concerns unique to the FQPA.

B. Exposure Assessment

1. *Dietary exposure from food and feed uses.* Tolerances that permit residues for other registered uses of metalaxyl and mefenoxam have been published at 40 CFR 180.408 on a variety of raw agricultural commodities. Currently, there are no established tolerances for mefenoxam. Risk assessments in support of this action were conducted by EPA to assess dietary exposures from all registered uses of metalaxyl and mefenoxam in food based on the tolerances established at 40 CFR 180.408 as follows:

i. *Acute exposure.* Acute dietary risk assessments are performed for a food–use pesticide if a toxicological study has indicated the possibility of an effect of concern occurring as a result of a one day or single exposure. EPA did not conduct an acute exposure risk assessment for mefenoxam. The rationale for this decision is that the laboratory data on metalaxyl and mefenoxam suggest that no toxic effect could be attributed to a single oral exposure. Therefore, no endpoints were selected for this exposure duration and no risk assessment was conducted.

ii. *Chronic exposure.* In conducting this chronic dietary risk assessment the Dietary Exposure Evaluation Model (DEEM) analysis evaluated the individual food consumption as reported by respondents in the USDA 1989–1992 nationwide Continuing Surveys of Food Intake by Individuals (CSFII) and accumulated exposure to the chemical for each commodity. The following assumptions were made for the chronic exposure assessments: The risk assessment used the published tolerances for metalaxyl plus the tolerance associated with the requested exemption. Residues were assumed to be at tolerance levels. The use of tolerance level residues is considered a conservative assumption. For agricultural commodities, where such data were available, percent crop treated data were also used.

iii. *Cancer.* EPA bridged data on the carcinogenicity of metalaxyl from a carcinogenicity study in mice and a combined chronic toxicity and carcinogenicity study in rats to assess the carcinogenicity of mefenoxam. Based on these data, mefenoxam is considered ''not likely to be carcinogenic in human.'' This corresponds to category ''E'' in EPA's cancer classification system. Thus, an aggregate cancer risk assessment was not conducted for this action.

iv. *Anticipated residue and percent crop treated information.*

Section 408(b)(2)(F) states that the Agency may use data on the actual percent of food treated for assessing chronic dietary risk only if the Agency can make the following findings: Condition 1, that the data used are reliable and provide a valid basis to show what percentage of the food derived from such crop is likely to contain such pesticide residue; Condition 2, that the exposure estimate does not underestimate exposure for any significant sub population group; and Condition 3, if data are available on pesticide use and food consumption in a particular area, the exposure estimate does not understate exposure for the population in such area. In addition, the Agency must provide for periodic evaluation of any estimates used. To provide for the periodic evaluation of the estimate of percent crop treated (PCT) as required by section

408(b)(2)(F), EPA may require registrants to submit data on PCT.

The Agency used percent crop treated (PCT) information as follows.

The Agency believes that the three conditions listed above have been met. With respect to Condition 1, PCT estimates are derived from Federal and private market survey data, which are reliable and have a valid basis. EPA uses a weighted average PCT for chronic dietary exposure estimates. This weighted average PCT figure is derived by averaging State–level data for a period of up to 10 years, and weighting for the more robust and recent data. A weighted average of the PCT reasonably represents a person's dietary exposure over a lifetime, and is unlikely to underestimate exposure to an individual because of the fact that pesticide use patterns (both regionally and nationally) tend to change continuously over time, such that an individual is unlikely to be exposed to more than the average PCT over a lifetime. For acute dietary exposure estimates, EPA uses an estimated maximum PCT. The exposure estimates resulting from this approach reasonably represent the highest levels to which an individual could be exposed, and are unlikely to underestimate an individual's acute dietary exposure. The Agency is reasonably certain that the percentage of the food treated is not likely to be an underestimation. As to conditions 2 and 3, regional consumption information and consumption information for significant sub populations is taken into account through EPA's computer–based model for evaluating the exposure of significant sub populations including several regional groups. Use of this consumption information in EPA's risk assessment process ensures that EPA's exposure estimate does not understate exposure for any significant sub population group and allows the Agency to be reasonably certain that no regional population is exposed to residue levels higher than those estimated by the Agency. Other than the data available through national food consumption surveys, EPA does not have available information on the regional consumption of food to which metalaxyl or mefenoxam may be applied in a particular area.

2. *Dietary exposure from drinking water.* The Agency lacks sufficient monitoring exposure data to complete a comprehensive dietary exposure analysis and risk assessment for metalaxyl or mefenoxam in drinking water. Because the Agency does not have comprehensive monitoring data, drinking water concentration estimates are made by reliance on simulation or modeling taking into account data on the physical characteristics of metalaxyl and mefenoxam.

The Agency uses the Generic Estimated Environmental Concentration (GENEEC) or the Pesticide Root Zone/ Exposure Analysis Modeling System (PRZM/EXAMS) to estimate pesticide concentrations in surface water and SCI–GROW, which predicts pesticide concentrations in ground water. In general, EPA will use GENEEC (a tier 1 model) before using PRZM/EXAMS (a tier 2 model) for a screening–level assessment for surface water. The GENEEC model is a subset of the PRZM/ EXAMS model that uses a specific high–end runoff scenario for pesticides. GENEEC incorporates a farm pond scenario, while PRZM/EXAMS incorporate an index reservoir environment in place of the previous pond scenario. The PRZM/EXAMS model includes a percent crop area factor as an adjustment to account for the maximum percent crop coverage within a watershed or drainage basin.

None of these models include consideration of the impact processing (mixing, dilution, or treatment) of raw water for distribution as drinking water would likely have on the removal of pesticides from the source water. The primary use of these models by the Agency at this stage is to provide a coarse screen for sorting out pesticides for which it is highly unlikely that drinking water concentrations would ever exceed human health levels of concern.

Since the models used are considered to be screening tools in the risk assessment process, the Agency does not use estimated environmental concentrations (EECs) from these models to quantify drinking water exposure and risk as a %RfD or %PAD. Instead drinking water levels of comparison (DWLOCs) are calculated and used as a point of comparison against the model estimates of a pesticide's concentration in water. DWLOCs are theoretical upper limits on a pesticide's concentration in drinking water in light of total aggregate exposure to a pesticide in food, and from residential uses. Since DWLOCs address total aggregate exposure to mefenoxam they are further discussed in the aggregate risk sections below.

Since no acute dietary endpoint has been identified, no acute exposure estimated environmental concentrations (EECs) for metalaxyl and mefenoxam in surface water and ground water were calculated. The generic EECs for chronic exposures are estimated to be 63 ppb for surface water, based on the GENEEC model, and 5 ppb for ground water, based on the SCI–GROW model.

3. *From non–dietary exposure.* The term ''residential exposure'' is used in this document to refer to non–occupational, non–dietary exposure (e.g., for lawn and garden pest control, indoor pest control, termiticides, and flea and tick control on pets).

Metalaxyl and mefenoxam are currently registered for use on the following residential non–dietary sites: turf and certain ornamental sites. For short–term and intermediate–term exposures, no toxicological endpoint was selected. Thus, no exposure assessment is needed. Chronic, non–dietary, exposure is considered to be 180 days or longer. This sort of exposure duration is not expected to result in association with the requested section 18 exemption. Similarly, chronic non–dietary exposures are not expected from the use of other registered metalaxyl and mefenoxam products. Thus, a quantitative risk assessment for chronic residential exposures was not performed.

4. *Cumulative exposure to substances with a common mechanism of toxicity.* Section 408(b)(2)(D)(v) requires that, when considering whether to establish, modify, or revoke a tolerance, the Agency consider ''available information'' concerning the cumulative effects of a particular pesticide's residues and ''other substances that have a common mechanism of toxicity.''

EPA does not have, at this time, available data to determine whether metalaxyl and mefenoxam has a common mechanism of toxicity with other substances or how to include this pesticide in a cumulative risk assessment. Unlike other pesticides for which EPA has followed a cumulative risk approach based on a common mechanism of toxicity, metalaxyl and mefenoxam does not appear to produce a toxic metabolite produced by other substances. For the purposes of this tolerance action, therefore, EPA has not assumed that metalaxyl and mefenoxam has a common mechanism of toxicity with other substances. For information regarding EPA's efforts to determine which chemicals have a common mechanism of toxicity and to evaluate the cumulative effects of such chemicals, see the final rule for Bifenthrin Pesticide Tolerances November 26, 1997 (62 FR 62961).

C. Safety Factor for Infants and Children

1. *Safety factor for infants and children*—i. *In general.* FFDCA section 408 provides that EPA shall apply an additional tenfold margin of safety for infants and children in the case of

threshold effects to account for prenatal and postnatal toxicity and the completeness of the data base on toxicity and exposure unless EPA determines that a different margin of safety will be safe for infants and children. Margins of safety are incorporated into EPA risk assessments either directly through use of a MOE analysis or through using uncertainty (safety) factors in calculating a dose level that poses no appreciable risk to humans.

ii. *Developmental toxicity studies*. EPA has determined that there is adequate information about prenatal developmental toxicity to conclude that mefenoxam and metalaxyl do not pose a risk of increased sensitivity due to *in utero* exposure.

iii. *Reproductive toxicity study*. The 2–generation reproduction study is unacceptable because no offspring or parental toxicity was demonstrated at any dose level. Therefore, reproductive toxicity is currently considered a data gap.

iv. *Prenatal and postnatal sensitivity.* Based on reviewed laboratory data, there is no indication of increased sensitivity as a result of *in utero* exposure. There are no data gaps relative to *in utero* exposure. The 2–generation reproduction study is not considered to be acceptable because toxicity is absent in both offspring and parents at any dose level. This limitation makes it difficult to fully assess the effects of exposure to young animals following early postnatal exposure.

v. *Conclusion*. In considering all of the information in this area, EPA chose to reduce the infant and children's safety factor to 3x for this action. There are several factors underlying this decision: (1) There are no data gaps for this assessment of effects following *in utero* exposure; (2) there is no indication of increased sensitivity of rats and or rabbits to *in utero* exposure to mefenoxam or metalaxyl and ; (3) the exposure assessment will not underestimate the potential dietary and non–dietary exposure resulting from the use of mefenoxam. However, since the reproductive toxicity study is unacceptable the FQPA safety factor is 3x.

D. Aggregate Risks and Determination of Safety

To estimate total aggregate exposure to a pesticide from food, drinking water, and residential uses, the Agency calculates DWLOCs which are used as a point of comparison against the model estimates of a pesticide's concentration in water (EECs). DWLOC values are not regulatory standards for drinking water. DWLOCs are theoretical upper limits on a pesticide's concentration in drinking water in light of total aggregate exposure to a pesticide in food and residential uses. In calculating a DWLOC, the Agency determines how much of the acceptable exposure (i.e., the PAD) is available for exposure through drinking water [e.g., allowable chronic water exposure (mg/kg/day)= cPAD – (average food + chronic non–dietary, non–occupational exposure)]. This allowable exposure through drinking water is used to calculate a DWLOC.

A DWLOC will vary depending on the toxic endpoint, drinking water consumption, and body weights. Default body weights and consumption values as used by the USEPA Office of Water are used to calculate DWLOCs: 2L/70 kg (adult male), 2L/60 kg (adult female), and 1L/10 kg (child). Default body weights and drinking water consumption values vary on an individual basis. This variation will be taken into account in more refined screening–level and quantitative drinking water exposure assessments. Different populations will have different DWLOCs. Generally, a DWLOC is calculated for each type of risk assessment used: acute, short–term, intermediate–term, chronic, and cancer.

When EECs for surface water and ground water are less than the calculated DWLOCs, OPP concludes with reasonable certainty that exposures to metalaxyl and mefenoxam in drinking water (when considered along with other sources of exposure for which OPP has reliable data) would not result in unacceptable levels of aggregate human health risk at this time. Because OPP considers the aggregate risk resulting from multiple exposure pathways associated with a pesticide's uses, levels of comparison in drinking water may vary as those uses change. If new uses are added in the future, OPP will reassess the potential impacts of metalaxyl and mefenoxam on drinking water as a part of the aggregate risk assessment process.

1. *Acute risk*. As previously stated, no toxic effect was associated with a single dose or exposure to metalaxyl and mefenoxam in laboratory studies. Thus, an acute aggregate risk assessment is not needed.

2. *Chronic risk*. Using the exposure assumptions described in this unit for chronic exposure, EPA has concluded that exposure to metalaxyl and mefenoxam from food will utilize 10% of the cPAD for the U.S. population, 11% of the cPAD for non–nursing infants and 19% of the cPAD for children 1–6 years. Based on the use pattern, chronic residential exposure to residues of the metalaxyl and mefenoxam is not expected. In addition, despite the potential for chronic dietary exposure to these pesticides in drinking water, after calculating the DWLOCs and comparing them to conservative model estimated environmental concentrations of metalaxyl and mefenoxam in surface and ground water, EPA does not expect the aggregate exposure to exceed 100% of the cPAD, as shown in the following Table 2:

TABLE 2.—AGGREGATE RISK ASSESSMENT FOR CHRONIC (NON–CANCER) EXPOSURE TO MEFENOXAM

Population Subgroup	cPAD mg/kg/day	cPAD (Food)	Surface water EEC (ppb)	Ground water EEC (ppb)	Chronic DWLOC (ppb)
U.S. population	0.25	10%	63 ppb	5 ppb	780
children 1–6 years	0.25	19%	63 ppb	4.95 ppb	200
non–nursing infants	0.25	11%	63 ppb	4.95 ppb	220

3. *Short-term risk*. Short–term aggregate exposure takes into account residential exposure plus chronic exposure to food and water (considered to be a background exposure level).

Though residential exposure could occur with the use of metalaxyl and mefenoxam, no toxicological effects have been identified for short–term toxicity. Therefore, the aggregate risk is

the sum of the risk from food and water, which were previously addressed.

4. *Intermediate–term risk.* Intermediate–term aggregate exposure takes into account non–dietary, non–occupational exposure plus chronic exposure to food and water (considered to be a background exposure level).

Though residential exposure could occur with the use of metalaxyl and mefenoxam, no toxicological effects have been identified for intermediate–term toxicity. Therefore, the aggregate risk is the sum of the risk from food and water, which were previously addressed.

5. *Aggregate cancer risk for U.S. population.* An aggregate cancer risk was not conducted for this action. Available data on metalaxyl and mefenoxam indicate that the chemical is considered ''not likely to be carcinogenic in humans.''

6. *Determination of safety.* Based on these risk assessments, EPA concludes that there is a reasonable certainty that no harm will result to the general population, and to infants and children from aggregate exposure to mefenoxam residues.

V. Other Considerations

A. Analytical Enforcement Methodology

Enforcement methodology to enforce residues associated with this use on agricultural and animal commodities for metalaxyl is available in the Pesticide Analytical Manual. A unique method for mefenoxam, predominantly the R–enantiomer of metalaxyl, is under review at this time.

B. International Residue Limits

At this time, there are no Codex, Canadian, or Mexican residue tolerances for mefenoxam on canola. However, EPA is coordinating with the Canadian pesticide regulatory agency on this matter where a permit for the use of Helix on canola is under review. Thus, this time–limited tolerance for mefenoxam is expected to be compatible with future actions by Canadian officials on this matter.

C. Magnitude of Residues

Residues of mefenoxam (R)-2-[(2,6-dimethylphenyl)-methoxyacetylamino-propionic acid methyl ester and its metabolites containing the 2,6-dimethylaniline moiety, and N-(2-hydroxymethyl-6-methylphenyl)-N-(methoxyacetyl)-alanine methyl ester each expressed as mefenoxam equivalents are not expected to exceed 0.05 ppm in/on canola seed or its processed commodities (meal and refined oil) as a result of this section 18 use.

Secondary residues of mefenoxam in animal commodities as a result of this section 18 use are not expected to exceed the established tolerance for metalaxyl: 0.05 ppm for meat and meat byproducts (except kidney and liver) of cattle, goats, hogs, horses, poultry, and sheep; 0.4 ppm for fat, kidney, and liver of cattle, goats, hogs, horses, poultry, and sheep; 0.02 ppm for milk; and 0.05 ppm for eggs.

VI. Conclusion

Therefore, the tolerance is established for mefenoxam,, in or on canola at 0.05 ppm.

VII. Objections and Hearing Requests

Under section 408(g) of the FFDCA, as amended by the FQPA, any person may file an objection to any aspect of this regulation and may also request a hearing on those objections. The EPA procedural regulations which govern the submission of objections and requests for hearings appear in 40 CFR part 178. Although the procedures in those regulations require some modification to reflect the amendments made to the FFDCA by the FQPA of 1996, EPA will continue to use those procedures, with appropriate adjustments, until the necessary modifications can be made. The new section 408(g) provides essentially the same process for persons to ''object'' to a regulation for an exemption from the requirement of a tolerance issued by EPA under new section 408(d), as was provided in the old FFDCA sections 408 and 409. However, the period for filing objections is now 60 days, rather than 30 days.

A. What Do I Need to Do to File an Objection or Request a Hearing?

You must file your objection or request a hearing on this regulation in accordance with the instructions provided in this unit and in 40 CFR part 178. To ensure proper receipt by EPA, you must identify docket control number OPP–301042 in the subject line on the first page of your submission. All requests must be in writing, and must be mailed or delivered to the Hearing Clerk on or before November 24, 2000.

1. *Filing the request.* Your objection must specify the specific provisions in the regulation that you object to, and the grounds for the objections (40 CFR 178.25). If a hearing is requested, the objections must include a statement of the factual issues(s) on which a hearing is requested, the requestor's contentions on such issues, and a summary of any evidence relied upon by the objector (40 CFR 178.27). Information submitted in connection with an objection or hearing request may be claimed confidential by marking any part or all of that information as CBI. Information so marked will not be disclosed except in accordance with procedures set forth in 40 CFR part 2. A copy of the information that does not contain CBI must be submitted for inclusion in the public record. Information not marked confidential may be disclosed publicly by EPA without prior notice.

Mail your written request to: Office of the Hearing Clerk (1900), Environmental Protection Agency, 1200 Pennsylvania Ave., NW., Washington, DC 20460. You may also deliver your request to the Office of the Hearing Clerk in Rm. C400, Waterside Mall, 401 M St., SW., Washington, DC 20460. The Office of the Hearing Clerk is open from 8 a.m. to 4 p.m., Monday through Friday, excluding legal holidays. The telephone number for the Office of the Hearing Clerk is (202) 260–4865.

2. *Tolerance fee payment.* If you file an objection or request a hearing, you must also pay the fee prescribed by 40 CFR 180.33(i) or request a waiver of that fee pursuant to 40 CFR 180.33(m). You must mail the fee to: EPA Headquarters Accounting Operations Branch, Office of Pesticide Programs, P.O. Box 360277M, Pittsburgh, PA 15251. Please identify the fee submission by labeling it ''Tolerance Petition Fees.''

EPA is authorized to waive any fee requirement ''when in the judgement of the Administrator such a waiver or refund is equitable and not contrary to the purpose of this subsection.'' For additional information regarding the waiver of these fees, you may contact James Tompkins by phone at (703) 305–5697, by e-mail at tompkins.jim@epa.gov, or by mailing a request for information to Mr. Tompkins at Registration Division (7505C), Office of Pesticide Programs, Environmental Protection Agency, 1200 Pennsylvania Ave., NW., Washington, DC 20460.

If you would like to request a waiver of the tolerance objection fees, you must mail your request for such a waiver to: James Hollins, Information Resources and Services Division (7502C), Office of Pesticide Programs, Environmental Protection Agency, 1200 Pennsylvania Ave., NW., Washington, DC 20460.

3. *Copies for the Docket.* In addition to filing an objection or hearing request with the Hearing Clerk as described in Unit VII.A., you should also send a copy of your request to the PIRIB for its inclusion in the official record that is described in Unit I.B.2. Mail your copies, identified by the docket control number OPP–301042, to: Public Information and Records Integrity Branch, Information Resources and Services Division (7502C), Office of

Pesticide Programs, Environmental Protection Agency, 1200 Pennsylvania Ave., NW., Washington, DC 20460. In person or by courier, bring a copy to the location of the PIRIB described in Unit I.B.2. You may also send an electronic copy of your request via e–mail to: opp–docket@epa.gov. Please use an ASCII file format and avoid the use of special characters and any form of encryption. Copies of electronic objections and hearing requests will also be accepted on disks in WordPerfect 6.1/8.0 file format or ASCII file format. Do not include any CBI in your electronic copy. You may also submit an electronic copy of your request at many Federal Depository Libraries.

B. When Will the Agency Grant a Request for a Hearing?

A request for a hearing will be granted if the Administrator determines that the material submitted shows the following: There is a genuine and substantial issue of fact; there is a reasonable possibility that available evidence identified by the requestor would, if established resolve one or more of such issues in favor of the requestor, taking into account uncontested claims or facts to the contrary; and resolution of the factual issues(s) in the manner sought by the requestor would be adequate to justify the action requested (40 CFR 178.32).

VIII. Regulatory Assessment Requirements

This final rule establishes a time limited tolerance under FFDCA section 408. The Office of Management and Budget (OMB) has exempted these types of actions from review under Executive Order 12866, entitled *Regulatory Planning and Review* October 4, 1993 (58 FR 51735). This final rule does not contain any information collections subject to OMB approval under the Paperwork Reduction Act (PRA), 44 U.S.C. 3501 *et seq.*, or impose any enforceable duty or contain any unfunded mandate as described under Title II of the Unfunded Mandates Reform Act of 1995 (UMRA) (Public Law 104–4). Nor does it require any prior consultation as specified by Executive Order 13084, entitled *Consultation and Coordination with Indian Tribal Governments* May 19, 1998, (63 FR 27655) special considerations as required by Executive Order 12898, entitled *Federal Actions to Address Environmental Justice in Minority Populations and Low–Income Populations* February 16, 1994 (59 FR 7629) or require OMB review or any Agency action under Executive Order 13045, entitled *Protection of Children from Environmental Health Risks and Safety Risks* April 23, 1997 (62 FR 19885). This action does not involve any technical standards that would require Agency consideration of voluntary consensus standards pursuant to section 12(d) of the National Technology Transfer and Advancement Act of 1995 (NTTAA), Public Law 104–113, section 12(d) (15 U.S.C. 272 note). Since tolerances and exemptions that are established on the basis of a FIFRA section 18 exemption under FFDCA section 408, such as the tolerance in this final rule, do not require the issuance of a proposed rule, the requirements of the Regulatory Flexibility Act (RFA) (5 U.S.C. 601 *et seq.*) do not apply. In addition, the Agency has determined that this action will not have a substantial direct effect on States, on the relationship between the national government and the States, or on the distribution of power and responsibilities among the various levels of government, as specified in Executive Order 13132, entitled *Federalism* August 10, 1999 (64 FR 43255). Executive Order 13132 requires EPA to develop an accountable process to ensure ''meaningful and timely input by State and local officials in the development of regulatory policies that have federalism implications.'' ''Policies that have federalism implications'' is defined in the Executive Order to include regulations that have ''substantial direct effects on the States, on the relationship between the national government and the States, or on the distribution of power and responsibilities among the various levels of government.'' This final rule directly regulates growers, food processors, food handlers and food retailers, not States. This action does not alter the relationships or distribution of power and responsibilities established by Congress in the preemption provisions of FFDCA section 408(n)(4).

IX. Submission to Congress and the Comptroller General

The Congressional Review Act, 5 U.S.C. 801 *et seq.*, as added by the Small Business Regulatory Enforcement Fairness Act of 1996, generally provides that before a rule may take effect, the agency promulgating the rule must submit a rule report, which includes a copy of the rule, to each House of the Congress and to the Comptroller General of the United States. EPA will submit a report containing this rule and other required information to the U.S. Senate, the U.S. House of Representatives, and the Comptroller General of the United States prior to publication of this final rule in the **Federal Register**. This final rule is not a ''major rule'' as defined by 5 U.S.C. 804(2).

List of Subjects in 40 CFR Part 180

Environmental protection, Administrative practice and procedure, Agricultural commodities, Pesticides and pests, Reporting and recordkeeping requirements.

Dated: September 11, 2000.

Susan B. Hazen,

Acting Director, Office of Pesticide Programs.

Therefore, 40 CFR chapter I is amended as follows:

PART 180—[AMENDED]

1. The authority citation for part 180 continues to read as follows:

Authority: 21 U.S.C. 321(q), (346a) and 371.

2. Section 180.546 is added to read as follows:

§ 180.546 Mefenoxam; tolerances for residues.

(a) *General.* [Reserved]

(b) *Section 18 emergency exemptions.* A time–limited tolerance is established for mefenoxam (R)-2-(2,6-dimethylphenyl)-methoxyacetylamino-propionic acid methyl ester and its metabolites containing the 2,6-dimethylaniline moiety, and N-(2-hydroxymethyl-6-methylphenyl)-N-(methoxyacetyl)-alanine methyl ester, each expressed as mefenoxam equivalents in or on the following commodities food in connection with the use of the pesticide under a section 18 exemption granted by EPA. The time–limited tolerance will expire on the date specified in the following Table:

Commodity	Parts per million	Expiration/revocation date
Canola	0.05	12/31/01

(c) *Tolerances with regional registrations.* [Reserved]

(d) *Indirect or inadvertant residues.* [Reserved]

[FR Doc. 00–24576 Filed 9–22–00; 8:45 am]

BILLING CODE 6560–50–S

FEDERAL COMMUNICATIONS COMMISSION

47 CFR Part 15

[ET Docket 99–231; FCC 00–312]

Spread Spectrum Devices

AGENCY: Federal Communications Commission.

ACTION: Final rule.

SUMMARY: This document amends the Commission's rules for frequency hopping spread spectrum devices in the 2.4 GHz band (2400–2483.5 MHz). The rules were amended to allow frequency hopping spread spectrum transmitters operating in the band to use a minimum of 15 hopping channels, spanning a total of 75 MHz. The new rules will allow for hopping channels up to 5 MHz wide. The wider bandwidths will permit these systems to provide higher data speeds, thereby enabling the development of new and improved consumer products such as wireless computer local area networks and wireless cable modems.

DATES: Effective September 25, 2000.

FOR FURTHER INFORMATION CONTACT: Neal L. McNeil, Office of Engineering and Technology, (202) 418–2408, TTY (202) 418–2989, e-mail: nmcneil@fcc.gov.

SUPPLEMENTARY INFORMATION: This is a summary of the Commission's *First Report and Order,* ET Docket 99–231, FCC 00–312 adopted August 24, 2000 and released August 31, 2000. The full text of this document is available for inspection and copying during regular business hours in the FCC Reference Center, (Room CY–A257) 445 12th Street SW., Washington, DC. The complete text of this document also may be purchased from the Commission's duplication contractor, International Transcription Service, Inc., (202) 857–3800, 1231 20th Street, NW, Washington, DC 20036.

Summary of Report and Order

1. The First Report and Order (''R&O'') amends the Commission's rules for frequency hopping spread spectrum devices in the 2.4 GHz band (2400–2483.5 MHz). The rules were amended to allow frequency hopping spread spectrum transmitters operating in the band to use a minimum of 15 hopping channels, spanning a total of 75 MHz. The new rules will allow for hopping channels up to 5 MHz wide. The wider bandwidths will permit these systems to provide higher data speeds, thereby enabling the development of new and improved consumer products such as wireless computer local area networks and wireless cable modems.

2. The Commission initiated a Notice of Proposed Rule Making (''Notice''), 64 FR 38877, July 20, 1999, in this proceeding in response to a letter filed by the Home RF Working Group (''Home RF'') requesting that part 15 spread spectrum systems operating in the 2.4 GHz band be permitted to use bandwidths of up to 5 MHz. The Notice proposed rule changes consistent with the request of the Home RF Working Group. Specifically, the Notice proposed to allow systems to operate with bandwidths of up to 3 MHz or 5 MHz in the 2.4 GHz band. Under the proposal, the systems would utilize 75 hopping channels. Output power would be reduced in proportion to the increase in bandwidth over 1 MHz. For example, systems with 3 MHz bandwidths would operate with output power of no more than 320 mW and channel occupancy time no greater than 0.05 second per hop. Each of the 75 channels would be used at least once during a 3.75 second period. Like existing 1 MHz systems, the average time of occupancy on any channel would not be greater than 0.4 second within a 30 second period. Under the proposal, systems using 5 MHz bandwidths would operate with output power of no more than 200 mW and channel occupancy time of no greater than 0.02 second per hop. Each of the 75 hopping channels would be used at least once during a 1.5 second period. Again, the average occupancy time on any channel would remain 0.4 second or less per 30 second period.

3. Opponents of the proposed rules expressed a number of concerns. For example, the Wireless Ethernet Compatibility Alliance (''WECA'') filed comments October 14, 1999, asserting that devices operating under the proposed new rules will not be able to achieve the claimed higher data rates because they will be more prone to multipath and interference problems. The opponents therefore assert the Home RF proposal will have little or no public benefit. The opponents are concerned that, under the Notice, wide band frequency hopping systems could use overlapping hopping channels. Intersil and Lucent submitted technical analyses and test data claiming to show that interference from partially overlapping channels is more detrimental to frequency hopping systems than the first-adjacent or co-channel interference. According to Intersil, wide band frequency hopping systems employing overlapping channels will experience a greater level of mutual interference than existing systems that use 1 MHz bandwidths. To compensate, they assert that the systems would likely resort to multiple retransmissions, with the net effect that wide bandwidth systems will transmit continuously and totally occupy the 2400–2483 MHz band to the exclusion of other devices. Silicon Wave supports Intersil's findings. Several parties state that the Home RF proposal will cause interference to devices under development by Bluetooth, a cross-industry group formed to establish industry-wide specifications for unlicensed wireless voice and data communications devices operating in the 2.4 GHz band

4. WECA and other opponents of the Home RF proposal offer several proposals as a compromise to reduce the potential for interference to other part 15 devices. They maintain that the output power should be reduced much further than the proposed 200 milliwatts. Several members of WECA offer a compromise that would limit the bandwidth of wide band frequency hopping spread spectrum systems to 4 MHz, establish a minimum of 20 hopping channels, and restrict the output power to 65 milliwatts. WECA asserts that this proposal would be consistent with European standard ETS 300 328. The ETS 300 328 standard permits frequency hopping systems in the 2.4 GHz band to use at least 20 non-overlapping hopping channels, each with up to 4 MHz bandwidth, and up to 100 mW effective radiated power, or 61 mW transmitter output power based on an assumed antenna gain of 1.64. WECA notes that, in a previous proceeding where the Commission reduced the number of required hops for spread spectrum devices operating in the 915 MHz band, the output power was reduced in proportion to the square in the number of hopping frequencies. For a system using a 4 MHz bandwidth the number of hopping channels would be reduced by a factor of approximately 4 (from 75 to 20 channels), and the output power would need to be reduced by a factor of 16 (from 1 watt to 60 mW). WECA also suggests two additional requirements. First, WECA proposes to require interference rejection tests for receivers in frequency hopping systems having channel widths greater than 1 MHz. WECA states that the test is necessary to ensure that receiver performance is adequate to minimize the need to retransmit packets, which,

in turn, will minimize interference to other devices. Second, WECA suggests that the Commission place a maximum limit of 100 hops/sec for frequency hopping systems using bandwidths greater than 1 MHz.

As justification, WECA argues that parties on both sides of the debate have acknowledged that increasing the hopping rate also increases interference. However, WECA concedes that in some cases faster hopping is necessary and desirable for 1 MHz systems. Therefore, WECA does not propose maximum hopping rate restrictions for systems using 1 MHz channels.

5. In response to the opposition, supporters of the Notice offer suggestions for accommodating wider bandwidths without overlapping channels. In an *ex parte* filing received March 23, 2000, Proxim Inc. proposes to allow manufacturers to use 3 MHz or 5 MHz wide, non-overlapping hopping channels. The total number of channels used would span at least 75 MHz. Output power for systems using 3 MHz and 5 MHz wide channels would remain 320 mW and 200 mW, respectively, as originally proposed in the Notice. Under the Proxim proposal, the average time of occupancy on any hopping channel would be limited to 0.4 seconds within a 30 second period or a period of 30 seconds divided by the 20 dB channel bandwidth, whichever is less.

6. We find that the record supports rule changes that will permit wider bandwidths for frequency hopping spread spectrum systems. We reject the argument that such rule changes will have little or no benefit. We note that numerous parties filed comments indicating that the proposed rule changes would permit the introduction of a wide array of new and improved devices. We have no reason to doubt these claims. We anticipate that any technical constraints to higher data speeds using wider bandwidths can be overcome by appropriate equipment design. We also agree that rule changes to permit wide band frequency hopping systems will encourage competition with direct sequence technology, to the benefit of consumers.

7. We believe it is appropriate to adopt rules that represent a reasonable engineering compromise between the risks of increased interference and the desire to accommodate new technologies. We are concerned about the comments submitted by the opponents regarding the interference potential of overlapping frequency hopping channels. Intersil's technical analysis presents compelling arguments why overlapping channels should not be allowed. Supporters of the Notice submitted modified proposals which would eliminate the use of overlapping channels. In light of this concession, we will amend our rules to allow frequency hopping systems in the 2.4 GHz band to operate with at least 15 channels. The channels must be separated by at least their 20 dB bandwidths and may never overlap. The total span of channels shall be at least 75 MHz. We will also require that systems have a greater output power reduction than that proposed in the Notice. In order to reduce any potential impact on existing unlicensed devices, we will limit transmitter output power to 125 mW for any frequency hopping system that operates with fewer than 75 hopping channels. This power level is consistent with that used by many frequency hopping systems today and is only 3 dB more than opponents of the Home RF proposal. We are concerned that any further power reduction will constrain the useful operating range to such an extent that the devices will not be useful. The provision for 15 non-overlapping channels will accommodate up to 5 MHz bandwidths, which will allow faster data speeds and enable backward compatibility with existing devices.

8. In the Notice, we proposed minimum hopping rates of 20 hops/s (0.05 s/hop channel dwell time) and 50 hops/s (0.02 s/hop channel dwell time) for systems using 3 MHz and 5 MHz channels, respectively. However, in order to remain consistent with former regulations, we will leave the minimum hopping rate unchanged at 2.5 hops/s. Furthermore, we will not specify a maximum hopping rate for wide band frequency hopping systems, as WECA suggested. We realize that choosing the hopping rate for a system involves trade-offs. For example, the Committee for Unlicensed Broadband Enablement (''CUBE'') noted that faster hopping may be beneficial in some instances because the result is less time spent, on an instantaneous basis, on a channel that may be experiencing interference. On the other hand, faster hopping may also decrease system efficiency due to the greater amount of non-transmitting transition phases. The Commission has previously given manufacturers latitude in choosing the hopping rate which best suits their particular application. We are confident that manufacturers will continue to use good engineering practices in order to achieve their desired results without increasing the risk of harmful interference.

9. We will not specify receiver standards, as proposed in WECA's April 10, 2000 letter. We find that § 15.247(a)(1), which requires receiver input bandwidth to match hopping channel bandwidth, provides ample assurance that receivers are indeed functioning as part of a spread spectrum system. That is the intent of the rule section. Additionally, we agree with the Proxim letter dated April 14, 2000, stating that this issue is not appropriate for resolution in this First R&O since it was neither proposed by the Commission nor discussed by other parties.

10. The *Notice* in this proceeding, also proposed to modify the method for measuring processing gain for certain direct sequence spread spectrum systems. Because of the large volume of comments the Commission has received in this proceeding, we have decided to address the topics individually. Accordingly, we are postponing adoption of final rules for measuring processing gain. We will address the issue in a future Report and Order. The action we take here is not dependent on resolution of the processing gain issue.

Final Regulatory Flexibility Analysis

11. As required by the Regulatory Flexibility Act (''RFA''),[1] an Initial Regulatory Flexibility Analysis (''IRFA'') was incorporated in the *Notice of Proposed Rule Making* (''NPRM'') in this docket, ET Docket 99–231.[2] The Commission sought written public comment on the proposals in the NPRM, including comment on the IRFA. As described more fully below, we find that the rules we adopt in the *First Report and Order* will not have a significant economic impact on a substantial number of small entities.[3] We have nonetheless provided this Final Regulatory Flexibility Analysis (''FRFA'') to provide a fuller record in this proceeding. This IRFA conforms to the RFA.[4]

A. Need for and Objective of the Rules

12. The rules adopted in this First Report and Order are intended to facilitate the development of spread spectrum technology, particularly for high data-rate wireless applications. The rules will permit frequency hopping spread spectrum systems in the 2.4 GHz band (2400–2483.5 MHz) to operate with wider hopping channels. This action is taken in response to a request

[1] *See* 5 U.S.C. 603. The RFA, *see* 5 U.S.C. 601 *et seq.,* has been amended by the Contract With America Advancement Act of 1996, Public Law 104–121, 110 Stat. 847 (1996) (CWAAA). Title II of the CWAAA is the Small Business Regulatory Enforcement Fairness Act of 1996 (SBREFA).

[2] *See* ET Docket 99–231, FCC 99–149, 64 FR 38877, July 20, 1999.

[3] Thus, we could certify that an analysis is not required. *See* 5 U.S.C. 605(b).

[4] *See* 5 U.S.C. 604.

filed by the Home RF Working Group (''Home RF''). The Home RF request stated that the increased bandwidth is needed to meet business and consumer demand for high-speed data applications.

13. In the NPRM in this proceeding, the Commission also proposed to modify the method for measuring processing gain for certain direct sequence spread spectrum systems. Because of the large volume of comments the Commission has received in this proceeding, we have decided to address this second issue separately. Accordingly, we are postponing adoption of final rules for measuring processing gain, and will address the issue in a future Report and Order. The action we take here is not dependent on resolution of the processing gain issue.

B. Summary of Significant Issues Raised by Comments in Response to the IRFA

14. We received six comments in response to the IRFA in this proceeding. Three were submitted by the Office of Advocacy of the U.S. Small Business Administration (SBA), one by Proxim, Inc. (Proxim), which is a small business, and one comment apiece by the U.S. Senate and House Small Business Committees.

15. In its comment dated October 4, 1999, SBA stated that the IRFA did not comply with the RFA. Specifically, SBA stated that the IRFA did not fully consider the impact that the Commission's proposal would have on small entities. Furthermore, SBA stated that the IRFA failed to estimate the number of small businesses affected, describe the objectives of the proposed rules, propose alternatives, and properly state the paperwork burden the rules would place on equipment manufacturers. Accordingly, SBA stated that the Commission should not adopt final rules in this proceeding until the Commission conducted a fuller, superseding IRFA.

16. Subsequently, in the first of the remaining five, *ex parte* comments filed in response to the IRFA, Proxim filed a comment dated January 11, 2000. Proxim stated that approximately 80 small businesses filed comments in this proceeding, constituting over 66 percent of the almost 120 comments filed in total. Proxim noted that small business participated during both the comment and reply comment periods, and filed comments on both sides of the proposals. Last, Proxim argued that the proposal to permit frequency hopping spread spectrum systems would benefit small business by permitting ''a low cost means for home-based business to create a low-cost network capable of supporting high-capacity communications''—a network capability that, currently, ''likely is beyond the financial and/or technical reach of many small businesses and most very small home-based businesses.''

17. SBA's second comment was dated February 29, 2000. SBA clarified its position in light of Proxim's filing, stating that even if the significant economic effect of a proposal will be beneficial for small business, the proposal must be described and analyzed in an adequate IRFA. SBA stated that it did not wish to delay the issuance of final rules, and that, in light of the information provided by Proxim, the Commission should rectify its IRFA by conducting an adequate FRFA in conjunction with the adoption of final rules.

18. The Senate Committee on Small Business, in its comment dated August 8, 2000, stated that the IRFA did not sufficiently describe why the proposed action was being taken, did not discuss the reporting or recordkeeping requirements or skills necessary to satisfy the requirements of the rules, and did not offer alternatives to the proposed rules that would minimize the impact on small business. The Committee asked that the Commission revise the IRFA. The House Committee on Small Business, in its comment dated August 15, 2000, concurred with the Senate Committee's position.

19. SBA, in its third comment, dated August 18, 2000, stated that, in filing its second comment, SBA ''did not intend to withdraw its critical comments or relieve the FCC of its duty under RFA.''

20. In response to these comments, we have conducted this present, full FRFA. We also take this opportunity to discuss the previous analysis or IRFA, which, although not exhaustive, was sufficient to generate comments from the small business community. We believe that the record indicates that the IRFA met the objectives of the RFA. Delaying issuance of final rules at this time would not, therefore, advance those objectives.

21. First, concerning whether the IRFA sufficiently described why the proposed action was being taken, we note that the reason for action is clearly stated in the first paragraph of the Notice. The paragraph reads in part, ''We take this action to facilitate the continued development and deployment of spread spectrum technology, particularly for high data rate wireless applications.'' Therefore, interested parties who read the document were notified in the beginning of the item why the action was being taken. While the IRFA did not specifically mention the purpose of the proposed action, we believe that the Notice adequately informed interested parties of the reason for the proposed action, as required by the Regulatory Flexibility Act.

22. Concerning whether the IRFA adequately discussed the reporting or recordkeeping requirements or skills necessary to satisfy the rule requirements, we note that the IRFA stated that the proposed rule changes would not alter any current reporting or recordkeeping requirements. We emphasize that part 15 transmitters must be authorized under the Commission's certification procedure prior to marketing. The certification procedure requires that the device in question be tested to ensure that it is in compliance with Commission regulations. An application for certification must contain a report describing the test procedure as well as the test results. The proposal in the NPRM would permit alternative modes of operation for frequency hopping systems. However, the new operating modes would not alter the reporting or recordkeeping requirements for manufacturers of these devices.

23. The NPRM also proposed a modified test procedure for certain direct sequence spread spectrum systems. The Notice proposed that, ''manufacturers of direct sequence spread spectrum systems that use a spreading rate less than 10 chips per symbol to submit the results of the jamming margin test as well as a calculation of processing gain to verify compliance.'' This statement may have created the impression that the Commission was intending to impose new reporting requirements. However, as stated above, the certification procedure already requires the submission of test results and a report showing compliance with the rules. Our proposal only sought to clarify the specific information to include in this report.

24. Concerning whether the IRFA should have offered and discussed alternatives to the proposed rules that would have minimized the impact on small businesses, we believe that a positive benefit will result to small business as a result of this proceeding. Thus, we did not offer alternatives. Again, we should emphasize that the proposals would not require manufacturers to modify existing products. Instead, the rules would allow introduction of new devices into the marketplace. We expect that the rules will benefit small manufacturers by allowing them to distribute more diverse products. In turn, the more

diverse product selection will provide greater flexibility in designing wireless networks, thereby benefiting small businesses that use these types of devices.

25. Concerning whether the IRFA provided sufficient information so that the public could react in an informed manner, we note that, pursuant to the Administrative Procedure Act, *see* 5 U.S.C. 553, the Commission must provide ample opportunity for the public to comment on proposed rules. In this proceeding, the Commission provided a 75-day filing window for initial comments, followed by a 122-day period for reply comments. In total, the public had over six months to provide comments. More than 200 comments and other submissions were filed in this proceeding. Many of the commenters, including small businesses and educational institutions, enthusiastically endorsed the proposed changes. With the exception of the Small Business Administration, which subsequently clarified its comments, and Congress, no commenters raised adverse concerns regarding the IRFA. The Commission relies upon the public record to develop its rules. The rules changes in this proceeding were initiated at the urging and support of the small business community.

26. In addition, for existing manufacturers to take advantage of the revised rule and begin to supply frequency-hopping equipment, the manufacturer will need only to slightly modify frequency control components in their products. Such modification appears to us, given common understanding of the equipment, to be achievable with minimal effort and cost. In fact, as stated previously, many manufacturers, including small businesses, enthusiastically supported this rule change.

27. Last, we note that, in light of comments in response to the NPRM, we have altered our equipment usage parameters to eliminate the interference potential that might have resulted under the proposed rule. The changes have included eliminating the use of overlapping channels and reducing the maximum permitted power output.

C. Description and Estimate of the Number of Small Entities to Which the Rules Will Apply

28. The RFA directs agencies to provide a description of, and, where feasible, an estimate of the number of small entities that may be affected by the proposed rules, if adopted.[5] The RFA generally defines the term ''small entity'' as having the same meaning as the terms ''small business,'' ''small organization,'' and ''small governmental jurisdictions.'' In addition, the term ''small business'' has the same meaning as the term ''small business concern'' under the Small Business Act, 15 U.S.C. 632, unless the Commission has developed one or more definitions that are appropriate to its activities.[6] A ''small business concern'' is one that: (1) Is independently owned and operated; (2) is not dominant in its field of operation; and (3) meets any additional criteria established by the Small Business Administration (''SBA'').[7]

29. The Commission has not developed a definition of small entities specifically directed toward manufacturers of unlicensed communications devices. Therefore, we will utilize the SBA definition applicable to manufacturers of Radio and Television Broadcasting and Communications Equipment. According to the SBA regulations, unlicensed transmitter manufacturers must have 750 or fewer employees in order to qualify as a small business concern.[8] Census Bureau data indicates that there are 858 U.S. companies that manufacture radio and television broadcasting and communications equipment, and that 778 of these firms have fewer than 750 employees and would be classified as small entities.[9] This action will not have a negative impact on small entities that manufacture unlicensed spread spectrum devices.

30. According to SBA regulations, an electronic computer manufacturer must have 1,000 or fewer employees in order to qualify as a small entity.[10] Census Bureau data indicates that there are 716 firms that manufacture electronic computers. Of those, 659 have fewer than 500 employees and qualify as small entities.[11] The remaining 57 firms have 500 or more employees; however, we unable to determine how many of those have 1,000 or fewer employees and therefore also qualify as small entities under the SBA definition.

31. According to SBA regulations, a computer terminal manufacturer must have 1,000 or fewer employees in order to qualify as a small entity.[12] Census Bureau data indicates that there are 757 firms that manufacture computer terminals. Of those, 162 have fewer than 500 employees and qualify as small entities.[13] The remaining 11 firms have 500 or more employees; however, we unable to determine how many of those have 1,000 or fewer employees and therefore also qualify as small entities under the SBA definition.

32. According to SBA regulations, a computer peripheral equipment manufacturer must have 1,000 or fewer employees in order to qualify as a small entity.[14] Census Bureau data indicates that there are 757 firms that manufacture computer terminal equipment. Of those, 701 have fewer than 500 employees and qualify as small entities.[15] The remaining 56 firms have 500 or more employees; however, we unable to determine how many of those have 1,000 or fewer employees and therefore also qualify as small entities under the SBA definition.

33. According to SBA regulations, a manufacturer of household appliances must have 500 or fewer employees in order to qualify as a small entity.[16] Census bureau indicates that there are 55 firms that manufacture household equipment in the ''catch all'' category for such data. Of those, 42 have fewer than 500 employees and qualify as small entities.[17] The remaining 13 firms have 500 or more employees, and therefore, unless one or more has exactly 500 employees do not qualify as small entities under the SBA definition.

D. Description of Projected Reporting, Recordkeeping and Other Compliance Requirements

34. Part 15 transmitters are already required to be authorized under the Commission's certification procedure as a prerequisite to marketing and importation. See 47 CFR 15.101, 15.201, 15.305, and 15.405. The new regulations will add permissible methods of operation for frequency hopping spread

[5] 5 U.S.C. 603(b)(3).

[6] *See* 5 U.S.C. 601(3).

[7] 15 U.S.C. 632.

[8] *See* 13 CFR 121.201, (SIC) Code 3663.

[9] *See* U.S. Dept. of Commerce, 1992 Census of Transportation, Communications and Utilities (Issued May 1995), SIC category 3663.

[10] 13 CFR 121.201, SIC code 3571.

[11] U.S. Small Business Administration 1995 Economic CEnsus Industry and Enterprise Report, Table 3, SIC Code 3571. (Burau of the Census data adapted by the Office of Advocacy of the U.S. Small Business Administration).

[12] 13 CFR 121.201, SIC code 3575.

[13] U.S. Small Business Administration 1995 Economic Census Industry and Enterprise Report, Table 3, SIC Code 3575. (Bureau of the Census data adapted by the Office of Advocacy of the U.S. Small Business Administration).

[14] 13 CFR 121.201, SIC code 3577.

[15] U.S. Small Business Administration 1995 Economic Census Industry and Enterprise Report, Table 3, SIC Code 3639. (Bureau of the Census data adapted by the Office of Advocacy of the U.S. Small Business Administration).

[16] 13 CFR 121.201, SIC code 3639 (Household Appliances, Not Elsewhere Classified).

[17] U.S. Small Business Administration 1995 Economic Census Industry and Enterprise Report, Table 3, SIC Code 3639. (Bureau of the Census data adapted by the Office of Advocacy of the U.S. Small Business Administration).

spectrum systems. No new reporting or recordkeeping requirements will be required for the manufacturers of frequency hopping spread spectrum devices.

35. As previously noted, in the NPRM in this proceeding, the Commission also proposed a modified test procedure for certain direct sequence spread spectrum devices. Although this *First Report and Order* does not address this second issue, we emphasize that the proposed processing gain measurement procedure would not alter reporting or recordkeeping requirements. As stated above, the certification procedure already requires the submission of test results and a report showing compliance with Commission rules. The proposal would clarify the specific information to include in this report.

E. Steps Taken To Minimize Significant Economic Impact on Small Entities and Significant Alternatives Considered

36. The rule changes adopted in this *First Report and Order* are intended to support the development of improved frequency hopping spread spectrum systems. These actions will benefit frequency hopping spread spectrum manufacturers, including small entities.

37. In the NPRM, we proposed to allow frequency hopping systems in the 2400–2483.5 MHz band to operate with bandwidths of up to 5 MHz. The increase in bandwidth over 1 MHz would be accompanied by a proportionate decrease in output power. The minimum number of hopping channels would remain the same.

38. Supporters of the NPRM argued that the rule changes were needed to accommodate high-speed data transmissions for home and business applications. The opponents argued that the proposed changes would cause unacceptable interference to other part 15 devices already operating in this spectrum. While they recognized that part 15 devices have no interference protection under the rules, opponents asserted that the Commission should act on public interest grounds to avoid increasing interference to existing consumer devices. They suggested several modifications to the proposal which, they claimed, would reduce the interference threat. Proponents of the NPRM also filed modified proposals in an effort to reach a compromise.

39. In response to the comments filed by interested parties, including small businesses, the Commission modified the proposal contained in the NPRM by requiring frequency hopping systems to use at least 15 non-overlapping channels. We have also reduced the maximum transmitter output power from that which was proposed in the NPRM. The new rules will accomplish the objectives stated in the NPRM while creating less of an interference threat to other systems currently operating in the 2400—2483.5 MHz band. The changes we adopt in this *First Report and Order* will result in increased maximum data rates for frequency hopping spread spectrum devices operating in the 2.4 GHz band. The rules will benefit manufacturers of home electronic equipment, including small businesses, by enabling them to offer customers a greater variety of products that meet their customers' networking needs.

40. As noted, we received numerous comments in this proceeding, and one alternative would have been to deny the request of Home RF and other proponents. That alternative, which we rejected, would not have resulted in the introduction of high-speed data applications that we believe will result as a consequence of the rules we are adopting.

41. *Report to Congress.* The Commission will send a copy of the First Report and Order, including this FRFA, in a report to Congress pursuant to SBREFA.[18] In addition, the Commission will send a copy of the First Report and Order, including the FRFA, to the Chief Counsel for Advocacy of the SBA.

[18] *See* 5 U.S.C. 801(a)(1)(A).

List of Subjects in 47 CFR Part 15

Communications equipment.

Federal Communications Commission.

Magalie Roman Salas,

Secretary.

Rule Changes

For the reasons discussed in the preamble, the Federal Communications Commission amends 47 CFR part 15 as follows:

PART 15—RADIO FREQUENCY DEVICES

1. The authority citation for part 15 continues to read as follows:

Authority: 47 U.S.C. 154, 302, 303, 304, 307, 544A.

2. Section 15.247 is amended by adding a new paragraph (a)(1)(iii) and revising paragraph (b)(1) to read as follows:

§ 15.247 Operation within the bands 902–928 MHz, 2400–2483.5 MHz, and 5725–5850 MHz.

(a) * * *

(1) * * *

(iii) Frequency hopping systems in the 2400—2483.5 MHz band may utilize hopping channels whose 20 dB bandwidth is greater than 1 MHz provided the systems use at least 15 non-overlapping channels. The total span of hopping channels shall be at least 75 MHz. The average time of occupancy on any one channel shall not be greater than 0.4 seconds within the time period required to hop through all channels.

(b) * * *

(1) For frequency hopping systems in the 2400–2483.5 MHz band employing at least 75 hopping channels, all frequency hopping systems in the 5725–5850 MHz band, and all direct sequence systems: 1 watt. For all other frequency hopping systems in the 2400–2483.5 MHz band: 0.125 watts.

* * * * *

[FR Doc. 00–24541 Filed 9–22–00; 8:45 am]

BILLING CODE 6712–01–P

Proposed Rules

Federal Register
Vol. 65, No. 186
Monday, September 25, 2000

This section of the FEDERAL REGISTER contains notices to the public of the proposed issuance of rules and regulations. The purpose of these notices is to give interested persons an opportunity to participate in the rule making prior to the adoption of the final rules.

DEPARTMENT OF AGRICULTURE

Office of the Secretary

7 CFR Part 6

Withdrawal of Proposed Rule To Establish Licensing for Certain Sugar-Containing Products Under Tariff-Rate Quota

AGENCY: Office of the Secretary, USDA.

ACTION: Notice of withdrawal.

SUMMARY: This document advises the public that the proposed rule is withdrawn based on legal action by the Canadian Government which addressed the principal purposes of the proposed rule by rescinding mandated increases in Canadian exports of certain sugar containing products (SCP) packaged for retail sale.

FOR FURTHER INFORMATION CONTACT: Diana Wanamaker, STOP 1021, 1400 Independence Avenue, SW., Washington, DC 20250–1021, or telephone at (202) 720–1330, or e-mail at Wanamaker@fas.usda.gov.

SUPPLEMENTARY INFORMATION:

Background

Proposed Rule

The proposed rule (RIN 0551–AA–59), published in the **Federal Register** on March 17, 2000 (65 FR 14478–14484), provides for a licensing system for imports of certain SCP which enter under the tariff-rate quota (TRQ) provided for in Additional U.S. Note 8 to chapter 17 of the Harmonized Tariff Schedule of the United States (HTS). The TRQ limits certain SCP imports entered from October 1 through September 30 in any given year to 64,709,000 kilograms, of which Canada is allocated 59,250,000 kilograms. The proposed rule was published in response to U.S. industry concerns regarding mandated increases in retail packaged SCP exports required under Canada's export permit system which became effective on October 1, 1999. The Department received public comments on the proposed rule from nearly 100 entities (e.g., importers, packers, industry associations, and government officials) on specific provisions of the proposed rule; potential effects on bulk and retail product importers and packers; and costs or unintended market consequences affecting importers, buyers, and participants in the U.S. SCP re-export program.

Canada's Action

On June 20, 2000, the Government of Canada amended its export permit system to rescind the phased increase in export permits allocated for retail packaged SCP shipments to the United States. The amendment also rescinded the Canadian Government's policy of promoting value added SCP exports by altering product availability.

In view of the remedial action taken by the Government of Canada to eliminate its market intervention measures, it is appropriate to withdraw the proposed rule.

Signed at Washington, D.C. on September 19, 2000.

Timothy J. Galvin,

Administrator, Foreign Agricultural Service.

[FR Doc. 00–24544 Filed 9–22–00; 8:45 am]

BILLING CODE 3410–10–P

DEPARTMENT OF AGRICULTURE

Federal Crop Insurance Corporation

7 CFR Part 457

Common Crop Insurance Regulations; Forage Seeding Crop Provisions

AGENCY: Federal Crop Insurance Corporation, USDA.

ACTION: Proposed rule with request for comments.

SUMMARY: The Federal Crop Insurance Corporation (FCIC) proposes to amend the Forage Seeding Crop Insurance Provisions. The intended effect of this proposed action is to provide policy changes to better meet the needs of the insureds and to restrict the effect of the current Forage Seeding Crop Insurance Regulations to the 2001 and prior crop years.

DATES: Written comments and opinions on this proposed rule will be accepted until close of business October 25, 2000, and will be considered when the rule is to be made final. The comment period for information collection under the Paperwork Reduction Act of 1995 continues through November 24, 2000.

ADDRESSES: Interested persons are invited to submit written comments to the Director, Product Development Division, Federal Crop Insurance Corporation, United States Department of Agriculture, 6501 Beacon Drive, Kansas City, Mo 64133. Comments may be sent via Internet to ''DIRECTOR PDD@RM.FCIC.USDA.GOV''. A copy of each response will be available for public inspection and copying from 7 a.m. to 4:30 p.m., CDT, Monday through Friday except holidays, at the above address.

FOR FURTHER INFORMATION CONTACT: Arden Routh, Insurance Management Specialist, Research and Development, Product Development Division, Federal Crop Insurance Corporation, at the Kansas City, MO, address listed above, telephone (816) 926–7730.

SUPPLEMENTARY INFORMATION:

Executive Order 12866

This rule has been determined to be exempt for the purpose of Executive Order 12866 and, therefore, has not been reviewed by the Office of Management and Budget (OMB).

Paperwork Reduction Act of 1995

Under the provisions of the Paperwork Reduction Act of 1995 (44 U.S.C. chapter 35), the collections of information for this rule have been previously approved by OMB under control number 0563–0053 through April 30, 2001.

Unfunded Mandates Reform Act of 1995

Title II of the Unfunded Mandates Reform Act of 1995 (UMRA) establishes requirements for Federal agencies to assess the effects of their regulatory actions on State, local, and tribal governments and the private sector. This rule contains no Federal mandates (under the regulatory provisions of title II of the UMRA) for State, local, and tribal governments or the private sector. Therefore, this rule is not subject to the requirements of sections 202 and 205 of the UMRA.

Executive Order 13132

The provisions contained in this rule will not have a substantial direct effect on States, the relationship between the

national government and the States, or on the distribution of power and responsibilities among various levels of government. Therefore, no consultation with states is required.

Regulatory Flexibility Act

This regulation will not have a significant economic impact on a substantial number of small entities. New provisions included in this rule will not impact small entities to a greater extent than large entities. Under the current regulations, every producer is required to complete an application and acreage report. If the crop is damaged or destroyed, the producer is required to give notice of loss and provide the necessary information to complete a claim for indemnity. This regulation does not alter those requirements. The amount of work required of the insurance companies delivering and servicing these policies will not increase significantly from the amount of work currently required. Therefore, this action is determined to be exempt from the provisions of the Regulatory Flexibility Act (5 U.S.C. 605), and no Regulatory Flexibility Analysis was prepared.

Federal Assistance Program

This program is listed in the Catalog of Federal Domestic Assistance under No. 10.450.

Executive Order 12372

This program is not subject to the provisions of Executive Order 12372, which requires intergovernmental consultation with State and local officials. See the Notice related to 7 CFR part 3015, subpart V, published at 48 FR 29115, June 24, 1983.

Executive Order 12988

This proposed rule has been reviewed in accordance with Executive Order 12988 on civil justice reform. The provisions of this rule will not have a retroactive effect. The provisions of this rule will preempt State and local laws to the extent such State and local laws are inconsistent herewith. The administrative appeal provisions published at 7 CFR part 11 must be exhausted before any action against FCIC for judicial review may be brought.

Environmental Evaluation

This action is not expected to have a significant economic impact on the quality of the human environment, health, and safety. Therefore, neither an Environmental Assessment nor an Environmental Impact Statement is needed.

Background

FCIC proposes to amend the Common Crop Insurance Regulations (7 CFR Part 457) by amending 7 CFR 457.151 Forage Seeding Crop Insurance Provisions effective for the 2002 and succeeding crop years. The changes to provisions for insuring forage seeding are as follows:

1. Section 4—Add a new contract change date for South Dakota counties where the Special Provisions designate both fall and spring final planting dates. This allows for a separation of policies and program changes to be made to each policy in a timely manner.

2. Section 5—Add cancellation and termination dates for South Dakota counties that will be applicable when the Special Provisions designate both fall and spring final planting dates. This is necessary to allow for the separate insurance of fall and spring planted forage.

3. Section 9(g)—Add end of insurance period dates for fall and spring planted acreage in California, Colorado, Idaho, Nebraska, Nevada, Oregon, Utah and Washington. This allows forage acreage to be insured continuously with no lapse, or overlap, in coverage between the end of insurance period under the Forage Seeding Crop Provisions and the beginning of the insurance period under the Forage Production Crop Provisions.

List of Subjects in 7 CFR Part 457

Crop insurance, Forage seeding, Reporting and recordkeeping requirements.

Proposed Rule

Accordingly, as set forth in the preamble, the Federal Crop Insurance Corporation proposes to amend 7 CFR part 457 as follows:

PART 457—COMMON CROP INSURANCE REGULATIONS

1. The authority citation for 7 CFR part 457 continues to read as follows:

Authority: 7 U.S.C. 1506(1), 1506(p).

2. Amend 457.151 as follows:

a. Revise the heading.

b. Revise the introductory text.

c. Revise section 4 of the crop provisions.

d. Revise section 5 of the crop provisions.

e. Revise Section 9(g) of the crop provisions.

The revisions and additions to § 457.151 and the crop provisions read as follows:

§ 457.151 Forage seeding crop insurance provisions.

The Forage Seeding Crop Insurance Provisions for the 2002 and succeeding crop years are as follows:

* * * * *

4. *Contract Changes.*

In accordance with section 4 of the Basic Provisions, the contract change date is June 30 preceding the cancellation date for counties with a September 30 cancellation date; November 30 preceding the cancellation date for counties with a March 15 cancellation date; and April 30 preceding the cancellation date for all other counties.

5. *Cancellation and Termination Dates.*

In accordance with section 2 of the Basic Provisions, the cancellation and termination dates are:

State and county	Cancellation and termination dates
California, Nevada, New Hampshire, New York, Pennsylvania and Vermont	July 31
South Dakota counties for which the Special Provisions designate both fall and spring final planting dates	September 30
South Dakota counties for which the Special Provisions designate only a spring final planting date, and all other states	March 15

* * * * *

9. Insurance Period.

* * * * *

(g) The following calendar dates:

(1) During the calendar year following the year of seeding for:

(i) Fall planted acreage in all California counties except Lassen, Modoc, Mono, Shasta and Siskiyou—November 30;

(ii) Spring planted acreage in Lassen, Modoc, Mono, Shasta and Siskiyou Counties California, Colorado, Idaho, Nebraska, Nevada, Oregon, Utah and Washington—April 14;

(iii) Spring planted acreage in all other states—May 21;

(iv) Fall planted acreage in Lassen, Modoc, Mono, Shasta and Siskiyou Counties California and all other states—October 15;

(2) During the calendar year of seeding for spring planted acreage in all California counties except Lassen, Modoc, Mono, Shasta and Siskiyou—November 30.

* * * * *

Signed in Washington, DC on September 13, 2000.

Kenneth D. Ackerman,

Manager, Federal Crop Insurance Corporation.

[FR Doc. 00–24504 Filed 9–22–00; 8:45 am]

BILLING CODE 3410–08–P

DEPARTMENT OF TRANSPORTATION

Federal Aviation Administration

14 CFR Part 25

[Docket No. NM175; Notice No. 25–00–02–SC]

Special Conditions: Boeing Model 777–200 Series Airplanes; Overhead Crew Rest Compartment

AGENCY: Federal Aviation Administration (FAA), DOT.

ACTION: Notice of proposed special conditions.

SUMMARY: This action proposes special conditions for Boeing Model 777–200 series airplanes, modified by Flight Structures, Inc. The proposed modification consists of the installation of a crew rest compartment located in the vicinity of door three in the overhead area of the passenger compartment. The crew rest compartment is to be certified for a maximum of ten occupants for use only during flight. The applicable airworthiness regulations do not contain adequate or appropriate safety standards for this design feature. These proposed special conditions contain the additional safety standards that the Administrator considers necessary to establish a level of safety equivalent to that established by the existing airworthiness standards.

DATES: Comments must be received on or before October 25, 2000.

ADDRESSES: Comments on this proposal may be mailed in duplicate to: Federal Aviation Administration, Transport Airplane Directorate, Attention: Rules Docket (ANM–114), Docket No. NM175, 1601 Lind Avenue SW., Renton, Washington, 98055–4056; or delivered in duplicate to the Transport Airplane Directorate at the above address. Comments must be marked: Docket No. NM175. Comments may be inspected in the Rules Docket weekdays, except Federal holidays, between 7:30 a.m. and 4:00 p.m.

FOR FURTHER INFORMATION CONTACT: Jayson Claar, FAA, Transport Standards Staff, ANM–115, Transport Airplane Directorate, 1601 Lind Avenue SW., Renton, Washington, 98055–4056; telephone (425) 227–2194; facsimile (425) 227–1320.

SUPPLEMENTARY INFORMATION:

Comments Invited

Interested persons are invited to participate in the making of these proposed special conditions by submitting such written data, views, or arguments, as they may desire. Communications should identify the regulatory docket or notice number and be submitted in duplicate to the address specified above. All communications received on or before the closing date for comments will be considered by the Administrator. The proposals described in this action may be changed in light of the comments received. All comments received will be available in the Rules Docket for examination by interested persons, both before and after the closing date for comments. A report summarizing each substantive public contact with FAA personnel concerning this rulemaking will be filed in the docket. Persons wishing the FAA to acknowledge receipt of their comments submitted in response to this action must include with those comments a self-addressed, stamped postcard on which the following statement is made: ''Comments to NM175.'' The postcard will be date stamped and returned to the commenter.

Background

On June 25, 1999, Flight Structures Inc., 4407 172 Street NE, Arlington, Washington, 98223, applied for a supplemental type certificate to install an overhead crew rest compartment in Boeing Model 777–200 series airplanes. The Boeing Model 777–200 series airplane is a large twin-jet engine transport airplane with four pairs of Type A exits, a passenger capacity of 440, and a range of 5000 miles. The overhead crew rest compartment is a single compartment located at the door three vicinity above the main passenger compartment with eight private bunks and two seats, and is to be certified for a maximum of ten occupants. A stairwell entering from the door three aisle is the main entry. Two escape hatches are located on either side of the entryway door. These proposed special conditions are written for an overhead crew rest compartment that will be occupied only in flight, not during taxi, takeoff, or landing.

Type Certification Basis

Under the provisions of § 21.101, Flight Structures, Inc., must show that the Boeing Model 777–200 series airplane, as changed, continues to meet the applicable provisions of the regulations incorporated by reference in Type Certificate No. T00001SE or the applicable regulations in effect on the date of application for the change. The regulations incorporated by reference in the type certificate are commonly referred to as the ''original type certification basis.'' The regulations incorporated by reference in Type Certificate No. T00001SE for the Boeing Model 777–200 series airplanes include 14 CFR part 25, as amended by Amendments 25–1 through 25–82. The U.S. type certification basis for the Boeing Model 777–200 series airplanes is established in accordance with 14 CFR 21.29 and 21.17 and the type certification application date. The type certification basis is listed in Type Certificate Data Sheet No. T00001SE.

If the Administrator finds that the applicable airworthiness regulations (*i.e.,* part 25) do not contain adequate or appropriate safety standards for the Model 777–200 series airplanes because of a novel or unusual design feature, special conditions are prescribed under the provisions of § 21.16.

In addition to the applicable airworthiness regulations and special conditions, Boeing Model 777–200 series airplane must comply with the fuel vent and exhaust emission requirements of 14 CFR part 34 and the noise certification requirements of 14 CFR part 36.

Special conditions, as appropriate, are issued in accordance with § 11.49, after public notice, as required by §§ 11.28 and 11.29(b), and become part of the type certification basis in accordance with § 21.101(b)(2).

Special conditions are initially applicable to the model for which they are issued. Should the applicant apply for a supplemental type certificate to modify any other model included on the same type certificate to incorporate the same novel or unusual design feature, the special conditions would also apply to the other model under the provisions of § 21.101(a)(1).

Novel or Unusual Design Features

While the installation of a crew rest compartment is not a new concept for large transport category airplanes, each compartment design has unique features by virtue of its design, location, and use on the airplane. Previously, crew rest compartments have been evaluated that are installed within the main passenger compartment area of the Boeing Model 777–200 and Model 777–300 series airplanes; other crew rest compartments have been installed below the passenger cabin area, within the cargo compartment. Similar overhead crew rest compartments have also been

installed on the Boeing Model 747 airplane. The interfaces of the modification are evaluated within the interior and assessed in accordance with the certification basis of the airplane. However, part 25 does not provide the requirements for crew rest compartments within the overhead area of the passenger compartment for the Boeing Model 777–200 series airplanes.

This is a compartment that has never been used for this purpose in any previous Boeing Model 777–200 series airplanes. Due to the novel or unusual features associated with the installation of this crew rest compartment, special conditions are considered necessary to provide a level of safety equal to that established by the airworthiness regulations incorporated by reference in the type certificate.

Discussion of the Proposed Special Conditions

In general, the requirements listed in these proposed special conditions are similar to those previously approved in earlier certification programs, such as for the Boeing Model 747 overhead crew rest compartment. These proposed special conditions establish seating, communication, lighting, personal safety, and evacuation requirements for the overhead crew rest compartment. When applicable, the proposed requirements parallel the existing requirements for a lower deck service compartment and provide an equivalent level of safety to that provided for main deck occupants.

Seats and berths must be certified to the maximum flight loads. Due to the location and configuration of the crew rest compartment, occupancy during taxi, takeoff, and landing would be prohibited, and occupancy limited to crewmembers during flight. Occupancy would be limited to either ten persons, or the combined total of approved seats and berths, whichever is less.

Two-way voice communications and public address speaker(s) would be required to alert the occupants to an inflight emergency. Also, a system to alert the occupants of the crew rest compartment in the event of decompression and to don oxygen masks would be required.

To prevent the occupants from being isolated in a dark area due to loss of the crew rest compartment lighting, either a second independent source of normal lighting or emergency lighting would be required. An emergency lighting system, which is activated under the same conditions as the main deck emergency lighting system, would also be required.

To preclude occupants from being trapped in the crew rest compartment in the event the main entryway is blocked, two evacuation routes, including the entryway, would be required. Each evacuation route must be designed to allow for removal of an incapacitated person from the crew rest compartment to the main deck.

In addition, passenger information signs, supplemental oxygen, and a seat or berth for each occupant of the crew rest compartment would be required. These items are necessary because of turbulence and/or decompression.

Proposed special condition no. 8 requires a means, readily detectable by seated or standing occupants of the crew rest compartment, which indicates when seat belts should be fastened. The requirement for visibility of the sign by standing occupants may be met by a general area sign that is visible to occupants standing in the main floor area or corridor of the crew rest area. It would not be essential to be visible from every possible location in the crew rest area; however, the location should not be easily obscured or remotely located.

Since the overhead crew rest compartment is remotely located from the main passenger cabin and will not always be occupied, a smoke detection system and fire-fighting equipment would be required to minimize the hazards associated with a fire in the crew rest compartment. The smoke detection system must be capable of detecting a fire in each area of the compartment created by the installation of a curtain or partition. The materials in the crew rest compartment must meet the flammability requirements of § 25.853(a), and the mattresses must meet the fire blocking requirements of § 25.853(c).

The crew rest compartment must be designed such that fires within the compartment can be controlled without having to enter the compartment; or, the design of the access provisions must allow crew equipped for fire fighting to have unrestricted access to the compartment. The time for a crewmember on the main deck to react to the fire alarm, to don the fire fighting equipment, and to gain access must not exceed the time for the crew rest compartment to become smoke filled, making it difficult to locate the fire source.

This proposed special condition requirement concerning fires within the compartment was developed for, and applied to, Boeing Model 777–200 and Model 777–300 series airplanes lower lobe crew rest compartment; it was not applied to the overhead crew rest compartment in earlier certification programs such as the Boeing Model 747. The Model 747 special conditions were issued before the new flammability requirements were developed. This requirement originated from a concern that a fire in an unoccupied crew rest compartment could spread into the passenger compartment, or affect other vital systems, before it could be extinguished. The proposed special conditions would require either the installation of a manually activated fire containment system that is accessible from outside the crew rest compartment, or a demonstration that the crew could satisfactorily perform the function of extinguishing a fire under the prescribed conditions. The manually activated fire containment system would be required only if it could not be demonstrated that a crewmember responding to the alarm could not locate the fire source and successfully extinguish the fire.

These proposed special conditions provide the regulatory requirements necessary for certification of this modification. Other special conditions may be developed, as needed, based on further FAA review and discussions with the applicant, manufacturer, and civil aviation authorities.

Applicability

As discussed above, these special conditions are applicable to Boeing Model 777–200 series airplanes. Should Flight Structures, Inc., apply at a later date for a supplemental type certificate to modify any other model included on Type Certificate No. T00001SE to incorporate the same novel or unusual design feature, the special conditions would apply to that model as well under the provisions of § 21.101(a)(1).

Conclusion

This action affects only certain novel or unusual design features on Boeing Model 777–200 series airplanes. It is not a rule of general applicability, and it affects only the applicant who applied to the FAA for approval of these features on the airplane.

List of Subjects in 14 CFR Part 25

Aircraft, Aviation safety, Reporting and recordkeeping requirements.

The authority citation for these special conditions is as follows:

Authority: 49 U.S.C. 106(g), 40113, 44701, 44702, 44704.

The Proposed Special Conditions

Accordingly, the Federal Aviation Administration (FAA) proposes the following special conditions as part of the type certification basis for Boeing Model 777–200 series airplanes, as modified by Flight Structures, Inc., with overhead crew rest compartments.

1. Occupancy of the overhead crew rest compartment is limited to a maximum of ten occupants. There must be an approved seat or berth able to withstand the maximum flight loads when occupied for each occupant permitted in the crew rest compartment.

(a) There must be appropriate placards, inside and outside to indicate:

(1) The maximum number of occupants allowed,

(2) That occupancy is restricted to crewmembers,

(3) That occupancy is prohibited during taxi, take-off and landing, and

(4) That smoking is prohibited in the crew rest compartment.

(b) There must be at least one ashtray on the inside and outside of any entrance to the crew rest compartment.

(c) There must be a means to prevent passengers from entering the compartment in the event of an emergency or when no flight attendant is present.

(d) There must be a means for any door installed between the crew rest compartment and passenger cabin to be capable of being quickly opened, even when crowding occurs at each side of the door.

(e) For all doors installed, there must be a means to preclude anyone from being trapped inside the compartment. If a locking mechanism is installed, it must be capable of being unlocked from the outside without the aid of special tools. The lock must not prevent opening from the inside of the compartment at any time.

2. There must be at least two emergency evacuation routes that could be used by each occupant of the crew rest compartment to rapidly evacuate to the main cabin. In addition—

(a) The routes must be located on opposite sides of the crew rest compartment with sufficient separation within the compartment, and between the evacuation routes, to minimize the possibility of an event rendering both routes inoperative.

(b) The routes must be designed to minimize the possibility of blockage, which might result from fire, mechanical or structural failure, or persons standing below or against the escape route. One of two evacuation routes may not be located where normal movement by passengers occurs (*i.e.,* main aisle, cross aisle, or galley complex) that would impede egress of the crew rest compartment. If there is low headroom at or near the evacuation route, provisions must be made to prevent or to protect occupants from head injury. The use of evacuation routes must not be dependent on any powered device.

(c) Emergency evacuation procedures must be established and transmitted to the operators for incorporation into their training programs and appropriate operational manuals.

(d) There must be a limitation in the Airplane Flight Manual or other suitable means requiring that crewmembers be trained in the use of evacuation routes.

3. There must be a means for the evacuation of an incapacitated person (representative of a ninety-fifth percentile male) from the crew rest compartment to the passenger cabin floor. The evacuation must be demonstrated for all evacuation routes. A flight attendant or other crewmember may provide assistance in the evacuation. Procedures for the evacuation of an incapacitated person from the crew rest compartment must be established.

4. The following signs and placards must be provided in the crew rest compartment:

(a) At least one exit sign, located near each exit, meeting the requirements of § 25.812(b)(1)(i).

(b) An appropriate placard defining the location and the operating instructions for each evacuation route.

(c) Placards must be readable from a distance of 30 inches under emergency lighting conditions.

(d) The exit handles and instruction placards must be illuminated to at least 160 microlamberts under emergency lighting conditions.

5. There must be a means in the event of failure of the airplane's main power system, or of the normal crew rest compartment lighting system, for emergency illumination to be automatically provided for the crew rest compartment.

(a) This emergency illumination must be independent of the main lighting system.

(b) The sources of general cabin illumination may be common to both the emergency and the main lighting systems if the power supply to the emergency lighting system is independent of the power supply to the main lighting system.

(c) The illumination level must be sufficient for the occupants of the crew rest compartment to locate and transfer to the main passenger cabin floor by means of each evacuation route.

6. There must be means for two-way voice communications between the crewmembers on the flight deck and the occupants of the crew rest compartment. There must also be two-way communications between the occupants of the crew rest compartment and each flight attendant station required to have a public address system microphone per § 25.1423(g) in the passenger cabin.

7. There must be a means for manual activation of an aural emergency alarm system, audible during normal and emergency conditions, to enable crewmembers on the flight deck and at each pair of required floor level emergency exits to alert occupants of the crew rest compartment of an emergency situation. Use of a public address or crew interphone system would be acceptable, providing an adequate means of differentiating between normal and emergency communications is incorporated. The system must be powered in flight, after the shutdown or failure of all engines and auxiliary power units, or the disconnection or failure of all power sources dependent on their continued operation, for a period of at least ten minutes.

8. There must be a means, readily detectable by seated or standing occupants of the crew rest compartment, which indicates when seat belts should be fastened. Seat belt type restraints must be provided for berths and must be compatible for the sleeping attitude during cruise conditions. There must be a placard on each berth requiring that seat belts must be fastened when occupied. If compliance with any of the other requirements of these special conditions is predicated on specific head location, there must be a placard identifying the head position. In the event there are no seats, at least one sign must be provided to cover anticipated turbulence.

9. The following equipment must be provided in the crew rest compartment:

(a) At least one approved hand-held fire extinguisher appropriate for the kinds of fires likely to occur;

(b) One protective breathing equipment device approved to TSO–C116 or equivalent, suitable for fire fighting; and

(c) One flashlight.

10. A smoke detection system (or systems) must be provided that monitors each area within the crew rest including those areas partitioned by curtains. Flight tests must be conducted to show compliance with this requirement. Each system (or systems) must provide:

(a) A visual indication to the flight deck within one minute after the start of a fire;

(b) An aural warning in the crew rest compartment; and

(c) A warning in the main passenger cabin. This warning must be readily detectable by a flight attendant, taking into consideration the positioning of flight attendants throughout the main

passenger compartment during various phases of flight.

11. The crew rest compartment must be designed such that fires within the compartment can be controlled without a crewmember having to enter the compartment, or the design of the access provisions must allow crewmembers equipped for firefighting to have unrestricted access to the compartment. The time for a crewmember on the main deck to react to the fire alarm, to don the fire fighting equipment, and to gain access must not exceed the time for the compartment to become smoke-filled, making it difficult to locate the fire source.

12. There must be a means provided to exclude hazardous quantities of smoke or extinguishing agent originating in the crew rest compartment from entering any other compartment occupied by crewmembers or passengers. The means must include the time periods during the evacuation of the crew rest compartment and, if applicable, when accessing the crew rest compartment to manually fight a fire. Smoke entering any other compartment occupied by crewmembers or passengers must dissipate within 5 minutes after closing the access to the crew rest compartment. Flight tests must be conducted to show compliance with this requirement.

13. There must be a supplemental oxygen system equivalent to that provided for main deck passengers for each seat and berth in the crew rest compartment. The system must provide:

(a) An aural and visual warning to the occupants of the crew rest compartment to don oxygen masks in the event of decompression; and

(b) A decompression warning that activates before the cabin pressure altitude exceeds 15,000 feet. The warning must sound continuously until a reset pushbutton in the crew rest compartment is depressed.

14. The following requirements apply to a crew rest compartment that is divided into several sections by the installation of curtains or partitions:

(a) To compensate for sleeping occupants, there must be an aural alert that can be heard in each section of the crew rest compartment that accompanies automatic presentation of supplemental oxygen masks. Two supplemental oxygen masks are required in each section whether or not seats or berths are installed in each section. There must also be a means by which the occupants can manually deploy the oxygen masks.

(b) A placard is required adjacent to each curtain that visually divides or separates, for privacy purposes, the overhead crew rest compartment into small sections. The placard must require that the curtain(s) remain open when the private section it creates is unoccupied. The vestibule section adjacent to the stairway is not considered a private area and, therefore, does not require a placard.

(c) For each crew rest section created by the installation of a curtain, the following requirements of these special conditions must be met with the curtain open or closed:

(1) No smoking placard (special condition no. 1),

(2) Emergency illumination (special condition no. 5),

(3) Emergency alarm system (special condition no. 7),

(4) Seat belt fasten signal (special condition no. 8), and

(5) The smoke or fire detection system (special condition no.'s 10, 11, and 12).

(d) Overhead crew rest compartments visually divided to the extent that evacuation could be affected must have exit signs that direct occupants to the primary stairway exit. The exit signs must be provided in each separate section of the crew rest compartment, and must meet the requirements of § 25.812(b)(1)(i).

(e) For sections within an overhead crew rest compartment that are created by the installation of a rigid partition with a door physically separating the sections, the following requirements of these special conditions must be met with the door open or closed:

(1) There must be a secondary evacuation route from each section to the main deck, or alternatively, the evacuation route must show that any door between the sections has been designed to preclude anyone from being trapped inside the compartment.

(2) Any door between the sections must be shown to be openable when crowded against, even when crowding occurs at each side of the door.

(3) There may be no more than one door between any seat or berth and the primary stairway exit.

(4) There must be exit signs in each section meeting the requirements of § 25.812(b)(1)(i) that direct occupants to the primary stairway exit.

(f) For each smaller section within the main crew rest compartment created by the installation of a partition with a door, the following requirements of these special conditions must be met with the door open or closed:

(1) No smoking placards (special condition no. 1),

(2) Emergency illumination (special condition no. 5),

(3) Two-way voice communication (special condition no. 6),

(4) Emergency alarm system (special condition no. 7),

(5) Seat belt fasten signal (special condition no. 8),

(6) Emergency fire fighting and protective equipment (special condition no. 9), and

(7) Smoke or fire detection system (special condition no.'s 10, 11, and 12).

15. The requirements of two-way voice communication with the flight deck and provisions for emergency firefighting and protective equipment are not applicable to lavatories or other small areas that are not intended to be occupied for extended periods of time.

16. Where a waste disposal receptacle is fitted, it must be equipped with an automatic fire extinguisher that meets the performance requirements of § 25.854(b).

17. Materials (including finishes or decorative surfaces applied to the materials) must comply with the flammability requirements of § 25.853(a), as amended by Amendment 25–83. Mattresses must comply with the flammability requirements of § 25.853(c), as amended by Amendment 25–83.

Issued in Renton, Washington on September 6, 2000.

Donald L. Riggin,

Acting Manager, Transport Airplane Directorate, Aircraft Certification Service.

[FR Doc. 00–23677 Filed 9–22–00; 8:45 am]

BILLING CODE 4910–13–P

DEPARTMENT OF TRANSPORTATION

Federal Aviation Administration

14 CFR Part 71

[Airspace Docket No. 00–ASO–36]

Proposed Amendment of Class D Airspace; Kissimmee, FL

AGENCY: Federal Aviation Administration (FAA), DOT.

ACTION: Notice of proposed rulemaking.

SUMMARY: This action proposes to amend Class D airspace at Kissimmee, FL. Orlando Approach Control is the controlling air traffic control facility for Instrument Flight Rules (IFR) operations at Kissimmee Municipal Airport, FL. Due to the proximity of the Kissimmee Municipal Airport to the Orlando International Airport and the Orlando Class B airspace area, Orlando Approach Control has requested the Kissimmee Class D airspace be lowered from 2,500 feet MSL to 1,500 feet MSL.

DATES: Comments must be received on or before October 25, 2000.

ADDRESSES: Send comments on the proposal in triplicate to: Federal Aviation Administration, Docket No. 00–ASO–36, Manager, Airspace Branch, ASO–520, P.O. Box 20636, Atlanta, GA 30320.

The official docket may be examined in the Office of the Regional Counsel for Southern Region, Room 550, 1701 Columbia Avenue, College Park, GA 30337, telephone (404) 305–5586.

FOR FURTHER INFORMATION CONTACT: Nancy B. Shelton, Manager, Airspace Branch, Air Traffic Division, Federal Aviation Administration, P.O. Box 20636, Atlanta, GA 30320; telephone (404) 305–5586.

SUPPLEMENTARY INFORMATION:

Comments Invited

Interested parties are invited to participate in this proposed rulemaking by submitting such written data, views or arguments as they may desire. Comments that provide the factual basis supporting the views and suggestions presented are particularly helpful in developing reasoned regulatory decisions on the proposal. Comments are specifically invited on the overall regulatory, aeronautical, economic, environmental, and energy-related aspects of the proposal. Communications should identify the airspace docket number and be submitted in triplicate to the address listed above. Commenters wishing the FAA to acknowledge receipt of their comments on this action must submit with those comments a self-addressed, stamped postcard on which the following statement is made: ''Comments to Airspace Docket No. 00–ASO–36.'' The postcard will be date/time stamped and returned to the commenter. All communications received before the specified closing date for comments will be considered before taking action on the proposed rule. The proposal contained in this action may be changed in light of the comments received. All comments submitted will be available for examination in the Office of the Regional Counsel for Southern Region, Room 550, 1701 Columbia Avenue, College Park, Georgia 30337, both before and after the closing date for comments. A report summarizing each substantive public contact with FAA personnel concerned with this rulemaking will be filed in the docket.

Availability of NPRMs

Any person may obtain a copy of this Notice of Proposed Rulemaking (NPRM) by submitting a request to the Federal Aviation Administration, Manager, Airspace Branch, ASO–520, Air Traffic Division, P. O. Box 20636, Atlanta, Georgia 30320. Communications must identify the docket number of this NPRM. Persons interested in being placed on a mailing list for future NPRMs should also request a copy of Advisory Circular No. 11–2A which describes the application procedure.

The Proposal

The FAA is considering an amendment to part 71 of the Federal Aviation Regulations (14 CFR Part 71) to amend Class D airspace at Kissimmee, FL Class D airspace designations for airspace areas extending upward from the surface are published in Paragraph 5000 of FAA Order 7400.9H, dated September 1, 2000, and effective September 16, 2000, which is incorporated by reference in 14 CFR 71.1. The Class D airspace designation listed in this document would be published subsequently in the Order.

The FAA has determined that this proposed regulation only involves an established body of technical regulations for which frequent and routine amendments are necessary to keep them operationally current. It, therefore, (1) is not a ''significant regulatory action'' under Executive Order 12866; (2) is not a ''significant rule'' under DOT Regulatory Policies and Procedures (44 FR 11034; February 26, 1979); and (3) does not warrant preparation of a Regulatory Evaluation as the anticipated impact is so minimal. Since this is a routine matter that will only affect air traffic procedures and air navigation, it is certified that this rule, when promulgated, will not have a significant economic impact on a substantial number of small entities under the criteria of the Regulatory Flexibility Act.

List of Subjects in 14 CFR Part 71

Airspace, Incorporation by reference, Navigation (air).

The Proposed Amendment

In consideration of the foregoing, the Federal Aviation Administration proposes to amend 14 CFR part 71 as follows:

PART 71—DESIGNATION OF CLASS A. CLASS B, CLASS V, CLASS D, AND CLASS E AIRSPACE AREAS; AIRWAYS; ROUTES; AND REPORTING POINTS

The authority citation for Part 71 continues to read as follows:

Authority: 49 U.S.C. 106(g); 40103; 40113, 40120; E.O. 10854, 24 FR 9565, 3CFR, 1959–1963 Comp., p. 389.

§ 71.1 [Amended]

2. The incorporation by in 14 CFR 71.1 of Federal Aviation Administration Order 7400.9H, Airspace Designations and Reporting Points, dated September 1, 2000, and effective September 16, 2000, is amended as follows:

Paragraph 5000 Class D Airspace.

* * * * *

ASO FL D Kissimmee, FL [Revised]

Kissimmee Municipal Airport, FL

(Lat. 28°17′23″N, long. 81°26′14″ W)

That airspace extending upward from the surface to but not including 1,600 feet MSL within a 4-mile radius of Kissimmee Municipal Airport, excluding that portion within the Orlando International Airport, FL, Class B airspace area. This Class D airspace area is effective during the specific dates and times established in advanced by a Notice to Airmen. The effective date and time will thereafter be continuously published in the Airport/Facility Directory.

* * * * *

Issued in College Park, Georgia, on September 11, 2000.

Wade T. Carpenter,

Acting Manager, Air Traffic Division, Southern Region.

[FR Doc. 00–24293 Filed 9–22–00; 8:45 am]

BILLING CODE 4910–13–M

DEPARTMENT OF TRANSPORTATION

Federal Aviation Administration

14 CFR Part 71

[Airspace Docket No. 00–ASO–37]

Proposed Amendment of Class E Airspace; Lexington, KY

AGENCY: Federal Aviation Administration (FAA), DOT.

ACTION: Notice of proposed rulemaking.

SUMMARY: This notice proposes to amend Class E airspace at Lexington, KY. A Non-Directional Beacon (NDB) Standard Instrument Approach Procedure (SIAP), has been developed for Blue Grass Airport, Lexington, KY. As a result, additional controlled airspace extending upward from 700 feet Above Ground Level (AGL) is needed to contain aircraft executing the SIAP. This action proposes to modify the Lexington, KY, Class E airspace area by adding a 5 mile wide 3 mile long extension to the southwest.

DATES: Comments must be received on or before October 25, 2000.

ADDRESSES: Send comments on the proposal in triplicate to: Federal Aviation Administration, Docket No. 00–ASO–37, Manager, Airspace Branch, ASO–520, P.O. Box 20636, Atlanta, Georgia 30320.

The official docket may be examined in the Office of the Regional Counsel for Southern Region, Room 550, 1701 Columbia Avenue, College Park, Georgia 30337, telephone (404) 305–5586.

FOR FURTHER INFORMATION CONTACT: Nancy B. Shelton, Manager, Airspace Branch, Air Traffic Division, Federal Aviation Administration, P.O. Box 20636, Atlanta, Georgia 30320; telephone (404) 305–5586.

SUPPLEMENTARY INFORMATION:

Comments Invited

Interested parties are invited to participate in this proposed rulemaking by submitting such written data, views or arguments as they may desire. Comments that provide the factual basis supporting the views and suggestions presented are particularly helpful in developing reasoned regulatory decisions on the proposal. Comments are specifically invited on the overall regulatory, aeronautical, economic, environmental, and energy-related aspects of the proposal. Communications should identify the airspace docket number and be submitted in triplicate to the address listed above. Commenters wishing the FAA to acknowledge receipt of their comments on this notice must submit with those comments a self-addressed, stamped postcard on which the following statement is made: ''Comments to Airspace Docket No. 00–ASO–37.'' The postcard will be date/time stamped and returned to the commenter. All communications received before the specified closing date for comments will be considered before taking action on the proposed rule. The proposal contained in this notice may be changed in light of the comments received. All comments submitted will be available for examination in the Office of the Regional Counsel for Southern Region, Room 550, 1701 Columbia Avenue, College Park, Georgia 30337, both before and after the closing date for comments. A report summarizing each substantive public contact with FAA personnel concerned with this rulemaking will be filed in the docket.

Availability of NPRMs

Any person may obtain a copy of this Notice of Proposed Rulemaking (NPRM) by submitting a request to the Federal Aviation Administration, Manager, Airspace Branch, ASO–520, Air Traffic Division, P.O. Box 20636, Atlanta, Georgia 30320. Communications must identify the notice number of this NPRM. Persons interested in being placed on a mailing list for future NPRMs should also request a copy of Advisory Circular No. 11–2A which describes the application procedure.

The Proposal

The FAA is considering an amendment to part 71 of the Federal Aviation Regulations (14 CFR Part 71) to amend Class E airspace at Lexington, KY. Class E airspace designations for airspace areas extending upward from 700 feet or more above the surface are published in Paragraph 6005 of FAA Order 7400.9H, dated September 1, 2000, and effective September 16, 2000, which is incorporated by reference in 14 CFR 71.1. The Class E airspace designation listed in this document would be published subsequently in the Order.

The FAA has determined that this proposed regulation only involves an established body of technical regulations for which frequent and routine amendments are necessary to keep them operationally current. It, therefore, (1) is not a ''significant regulatory action'' under Executive Order 12866; (2) is not a ''significant rule'' under DOT Regulatory Policies and Procedures (44 FR 11034; February 26, 1979); and (3) does not warrant preparation of a Regulatory Evaluation as the anticipated impact is so minimal. Since this is a routine matter that will only affect air traffic procedures and air navigation, it is certified that this rule when promulgated, will not have a significant economic impact on a substantial number of small entities under the criteria of the Regulatory Flexibility Act.

List of Subjects in 14 CFR part 71

Airspace, Incorporation by reference, Navigation (air).

The Proposed Amendment

In consideration of the foregoing, the Federal Aviation Administration proposes to amend 14 CFR part 71 as follows:

PART 71—DESIGNATION OF CLASS A, CLASS B, CLASS C, CLASS D, AND CLASS E AIRSPACE AREAS; AIRWAYS; ROUTES; AND REPORTING POINTS

1. The authority citation for Part 71 continues to read as follows:

Authority: 49 U.S.C. 106(g); 40103, 40113, 40120; E.O. 10854, 24 FR 9565, 3 CFR, 1959–1963 Comp., p. 389.

§ 71.1 [Amended]

2. The incorporation by reference in 14 CFR 71.1 of Federal Aviation Administration Order 7400.9H, Airspace Designations and Reporting Points, dated September 1, 2000, and effective September 16, 2000, is amended as follows:

Paragraph 6005 Class E Airspace Areas Extending Upward From 700 feet or More Above the Surface of the Earth.

* * * * *

ASO KY E5 Lexington, KY [Revised]

Lexington, Blue Grass Airport, KY
(Lat 38°02′13″ N, long. 84°36′19″ W)
Saint Joseph's Hospital and the University of Kentucky Medical Center, Lexington, KY, Point in Space Coordinates
(Lat 38°01′15″ N, long. 84°30′59″ W)
Blayd LOM/NDB
(Lat 37°59′13″ N, long. 84°39′38″ W)

That airspace extending upward from 700 feet or more above the surface within a 7-mile radius of Blue Grass Airport, that airspace within a 6-mile radius of the point in space (Lat 38°01′15″ N, long. 84°30′59″ W) serving Saint Joseph's Hospital and The University of Kentucky Medical Center, Lexington, KY, and that airspace within 2.5 miles each side of the 225° bearing from the Blayd LOM/NDB, extending from the 7-mile radius to 7 miles southwest of the airport.

* * * * *

Issued in College Park, Georgia, on September 15, 2000.

Wade T. Carpenter,

Acting Manager, Air Traffic Division Southern Region.

[FR Doc. 00–24490 Filed 9–22–00; 8:45 am]

BILLING CODE 4910–13–M

DEPARTMENT OF TRANSPORTATION

Federal Aviation Administration

14 CFR Part 71

[Airspace Docket No. 00–AAL–10]

Proposed Establishment of Class E Airspace; Sparrevohn, AK

AGENCY: Federal Aviation Administration (FAA), DOT.

ACTION: Notice of proposed rulemaking.

SUMMARY: This action proposes to establish Class E airspace at the Long Range Radar (LRR) site at Sparrevohn, AK. The United States Air Force requested this action to create controlled airspace for the instrument approach and departure procedures to runway (RWY) 34 and from RWY 16 at Sparrevohn, AK. This action is necessary in order for the approach and

departure procedures to be published in the U.S. Government Flight Information Publication, U.S. Terminal Procedures—Alaska. Adoption of this proposal would result in the provision of adequate controlled airspace for Instrument Flight Rules (IFR) operations at Sparrevohn, AK.

DATES: Comments must be received on or before November 9, 2000.

ADDRESSES: Send comments on the proposal in triplicate to: Manager, Operations Branch, AAL–530, Docket No. 00–AAL–10, Federal Aviation Administration, 222 West 7th Avenue, Box 14, Anchorage, AK 99513–7587.

The official docket may be examined in the Office of the Regional Counsel for the Alaskan Region at the same address.

An informal docket may also be examined during normal business hours in the Office of the Manager, Operations Branch, Air Traffic Division, at the address shown above and on the Internet at Alaskan Region's homepage at http://www.alaska.faa.gov/at or at address http://162.58.28.41/at.

FOR FURTHER INFORMATION CONTACT: Major Roger Stirm, Department of the Air Force Representative, Federal Aviation Administration, 222 West 7th Avenue, Box 14, Anchorage, AK 99513–7587; telephone number (907) 271–5892; fax: (907) 271–2850; email: Roger.Stirm@faa.gov. Internet address: http://www.alaska.faa.gov/at or at address http://162.58.28.41/at.

SUPPLEMENTARY INFORMATION:

Comments Invited

Interested parties are invited to participate in this proposed rulemaking by submitting such written data, views, or arguments as they may desire. Comments that provide the factual basis supporting the views and suggestions presented are particularly helpful in developing reasoned regulatory decisions on the proposal. Comments are specifically invited on the overall regulatory, aeronautical, economic, environmental, and energy-related aspects of the proposal. Communications should identify the airspace docket number and be submitted in triplicate to the address listed above. Commenters wishing the FAA to acknowledge receipt of their comments on this notice must submit with those comments a self-addressed, stamped postcard on which the following statement is made: ''Comments to Airspace Docket No. 00–AAL–10.'' The postcard will be date/time stamped and returned to the commenter. All communications received on or before the specified closing date for comments will be considered before taking action on the proposed rule. The proposal contained in this notice may be changed in light of comments received. All comments submitted will be available for examination in the Operations Branch, Air Traffic Division, Federal Aviation Administration, 222 West 7th Avenue, Box 14, Anchorage, AK, both before and after the closing date for comments. A report summarizing each substantive public contact with FAA personnel concerned with this rulemaking will be filed in the docket.

Availability of Notice of Proposed Rulemaking's (NPRM's)

An electronic copy of this document may be downloaded, using a modem and suitable communications software, from the FAA regulations section of the Fedworld electronic bulletin board service (telephone: 703–321–3339) or the **Federal Register's** electronic bulletin board service (telephone: 202–512–1661).

Internet users may reach the **Federal Register's** web page for access to recently published rulemaking documents at http://www.access.gpo.gov/su_docs/aces/aces140.html.

Any person may obtain a copy of this NPRM by submitting a request to the Operations Branch, AAL–530, Federal Aviation Administration, 222 West 7th Avenue, Box 14, Anchorage, AK 99513–7587. Communications must identify the notice number of this NPRM. Persons interested in being placed on a mailing list for future NPRM's should contact the individual(s) identified in the **FOR FURTHER INFORMATION CONTACT** section.

The Proposal

The FAA proposes to amend 14 CFR part 71 by establishing Class E airspace at Sparrevohn, AK, to create controlled airspace for the instrument approach and departure procedures to RWY 34 and from RWY 16, in order for the approach and departure procedures to be published in the U.S. Government Flight Information Publication, U.S. Terminal Procedures—Alaska. The intended effect of this proposal is to provide additional controlled airspace for IFR operations at Sparrevohn, AK.

The area would be depicted on aeronautical charts for pilot reference. The coordinates for this airspace docket are based on North American Datum 83. The Class E airspace areas designated as 700/1200 foot transition areas are published in paragraph 6005 in FAA Order 7400.9H, *Airspace Designations and Reporting Points,* dated September 1, 2000, and effective September 16, 2000, which is incorporated by reference in 14 CFR 71.1. The Class E airspace designations listed in this document would be published subsequently in the Order.

The FAA has determined that this proposed regulation only involves an established body of technical regulations for which frequent and routine amendments are necessary to keep them operationally current. It, therefore—(1) is not a ''significant regulatory action'' under Executive Order 12866; (2) is not a ''significant rule'' under DOT Regulatory Policies and Procedures (44 FR 11034; February 26, 1979); and (3) does not warrant preparation of a regulatory evaluation as the anticipated impact is so minimal. Since this is a routine matter that will only affect air traffic procedures and air navigation, it is certified that this rule, when promulgated, will not have a significant economic impact on a substantial number of small entities under the criteria of the Regulatory Flexibility Act.

List of Subjects in 14 CFR Part 71

Airspace, Incorporation by reference, Navigation (air).

The Proposed Amendment

In consideration of the foregoing, the Federal Aviation Administration proposes to amend 14 CFR part 71 as follows:

PART 71— DESIGNATION OF CLASS A, CLASS B, CLASS C, CLASS D, AND CLASS E AIRSPACE AREAS; AIRWAYS; ROUTES; AND REPORTING POINTS

1. The authority citation for 14 CFR part 71 continues to read as follows:

Authority: 49 U.S.C. 106(g), 40103, 40113, 40120; E.O. 10854, 24 FR 9565, 3 CFR, 1959–1963 Comp., p. 389.

§ 71.1 [Amended]

2. The incorporation by reference in 14 CFR 71.1 of Federal Aviation Administration Order 7400.9H, *Airspace Designations and Reporting Points,* dated September 1, 2000, and effective September 16, 2000, is to be amended as follows:

* * * * *

Paragraph 6005 Class E airspace extending upward from 700 feet or more above the surface of the earth.

* * * * *

AAL AK E5 Sparrevohn, AK [New]

Sparrevohn LRRS, AK
(Lat. 61°05′50″ N., long. 155°34′27″ W.)

That airspace extending upward from 700 feet above the surface within a 3 mile radius of the Sparrevohn LRRS; and that adjacent

airspace extending upward from 1,200 feet above the surface from lat. 60°50′00″ N long. 156°00′00″ W, counterclockwise to lat. 60°50′00″ N long. 154°32′00″ W, to lat. 61°15′00″ N long. 154°32′00″ W, to lat. 61°15′00″ N long. 156°00′00″ W, thence south along the 156°longitude to the point of beginning.

* * * * *

Issued in Anchorage, AK, on September 14, 2000.

Anthony M. Wylie,

Acting Manager, Air Traffic Division, Alaskan Region.

[FR Doc. 00–24486 Filed 9–22–00; 8:45 am]

BILLING CODE 4910–13–P

DEPARTMENT OF TRANSPORTATION

Federal Aviation Administration

14 CFR Part 71

[Airspace Docket No. 00–AAL–13]

Proposed Establishment of Class E Airspace; Cape Romanzof, AK

AGENCY: Federal Aviation Administration (FAA), DOT.

ACTION: Notice of proposed rulemaking.

SUMMARY: This action proposes to establish Class E airspace at the Long Range Radar (LRR) site at Cape Romanzof, AK. The United States Air Force requested this action to create controlled airspace for the instrument approach and departure procedures to runway (RWY) 20 and RWY 02 at Cape Romanzof, AK. This action is necessary in order for the approach and departure procedures to be published in the U.S. Government Flight Information Publication, U.S. Terminal Procedures—Alaska. Adoption of this proposal would result in the provision of adequate controlled airspace for Instrument Flight Rules (IFR) operations at Cape Romanzof, AK.

DATES: Comments must be received on or before November 9, 2000.

ADDRESSES: Send comments on the proposal in triplicate to: Manager, Operations Branch, AAL–530, Docket No. 00–AAL–13, Federal Aviation Administration, 222 West 7th Avenue, Box 14, Anchorage, AK 99513–7587.

The official docket may be examined in the Office of the Regional Counsel for the Alaskan Region at the same address.

An informal docket may also be examined during normal business hours in the Office of the Manager, Operations Branch, Air Traffic Division, at the address shown above and on the Internet at Alaskan Region's homepage at http://www.alaska.faa.gov/at or at address http://162.58.28.41/at.

FOR FURTHER INFORMATION CONTACT: Major Roger Stirm, Department of the Air Force Representative, Federal Aviation Administration, 222 West 7th Avenue, Box 14, Anchorage, AK 99513–7587; telephone number (907) 271–5892; fax: (907) 271–2850; email: Roger.Stirm@faa.gov. Internet address: http://www.alaska.faa.gov/at or at address http://162.58.28.41/at.

SUPPLEMENTARY INFORMATION:

Comments Invited

Interested parties are invited to participate in this proposed rulemaking by submitting such written data, views, or arguments as they may desire. Comments that provide the factual basis supporting the views and suggestions presented are particularly helpful in developing reasoned regulatory decisions on the proposal. Comments are specifically invited on the overall regulatory, aeronautical, economic, environmental, and energy-related aspects of the proposal. Communications should identify the airspace docket number and be submitted in triplicate to the address listed above. Commenters wishing the FAA to acknowledge receipt of their comments on this notice must submit with those comments a self-addressed, stamped postcard on which the following statement is made: ''Comments to Airspace Docket No. 00–AAL–13.'' The postcard will be date/time stamped and returned to the commenter. All communications received on or before the specified closing date for comments will be considered before taking action on the proposed rule. The proposal contained in this notice may be changed in light of comments received. All comments submitted will be available for examination in the Operations Branch, Air Traffic Division, Federal Aviation Administration, 222 West 7th Avenue, Box 14, Anchorage, AK, both before and after the closing date for comments. A report summarizing each substantive public contact with FAA personnel concerned with this rulemaking will be filed in the docket.

Availability of Notice of Proposed Rulemaking's (NPRM's)

An electronic copy of this document may be downloaded, using a modem and suitable communications software, from the FAA regulations section of the Fedworld electronic bulletin board service (telephone: 703–321–3339) or the **Federal Register's** electronic bulletin board service (telephone: 202–512–1661).

Internet users may reach the **Federal Register's** web page for access to recently published rulemaking documents at http://www.access.gpo.gov/su_docs/aces/aces140.html.

Any person may obtain a copy of this NPRM by submitting a request to the Operations Branch, AAL–530, Federal Aviation Administration, 222 West 7th Avenue, Box 14, Anchorage, AK 99513–7587. Communications must identify the notice number of this NPRM. Persons interested in being placed on a mailing list for future NPRM's should contact the individual(s) identified in the **FOR FURTHER INFORMATION CONTACT** section.

The Proposal

The FAA proposes to amend 14 CFR part 71 by establishing Class E airspace at Cape Romanzof, AK, to create controlled airspace for the instrument approach and departure procedures to RWY 20 and RWY 02, in order for the approach and departure procedures to be published in the U.S. Government Flight Information Publication, U.S. Terminal Procedures—Alaska. The intended effect of this proposal is to provide additional controlled airspace for IFR operations at Cape Romanzof, AK.

The area would be depicted on aeronautical charts for pilot reference. The coordinates for this airspace docket are based on North American Datum 83. The Class E airspace areas designated as 700/1200 foot transition areas are published in paragraph 6005 in FAA Order 7400.9H, *Airspace Designations and Reporting Points,* dated September 1, 2000, and effective September 16, 2000, which is incorporated by reference in 14 CFR 71.1. The Class E airspace designations listed in this document would be published subsequently in the Order.

The FAA has determined that this proposed regulation only involves an established body of technical regulations for which frequent and routine amendments are necessary to keep them operationally current. It, therefore—(1) is not a ''significant regulatory action'' under Executive Order 12866; (2) is not a ''significant rule'' under DOT Regulatory Policies and Procedures (44 FR 11034; February 26, 1979); and (3) does not warrant preparation of a regulatory evaluation as the anticipated impact is so minimal. Since this is a routine matter that will only affect air traffic procedures and air navigation, it is certified that this rule, when promulgated, will not have a significant economic impact on a substantial number of small entities under the criteria of the Regulatory Flexibility Act.

List of Subjects in 14 CFR Part 71

Airspace, Incorporation by reference, Navigation (air).

The Proposed Amendment

In consideration of the foregoing, the Federal Aviation Administration proposes to amend 14 CFR part 71 as follows:

PART 71— DESIGNATION OF CLASS A, CLASS B, CLASS C, CLASS D, AND CLASS E AIRSPACE AREAS; AIRWAYS; ROUTES; AND REPORTING POINTS

1. The authority citation for 14 CFR part 71 continues to read as follows:

Authority: 49 U.S.C. 106(g), 40103, 40113, 40120; E.O. 10854, 24 FR 9565, 3 CFR, 1959–1963 Comp., p. 389.

§ 71.1 [Amended]

2. The incorporation by reference in 14 CFR 71.1 of Federal Aviation Administration Order 7400.9H, *Airspace Designations and Reporting Points,* dated September 1, 2000, and effective September 16, 2000, is to be amended as follows:

* * * * *

Paragraph 6005 Class E airspace extending upward from 700 feet or more above the surface of the earth.

* * * * *

AAL AK E5 Cape Romanzof, AK [New]

Cape Romanzof LRRS, AK
(Lat. 61°46′49″ N., long. 166°02′19″ W.)

That airspace extending upward from 700 feet above the surface within a 7 mile radius of the Cape Romanzof LRRS; and that airspace extending upward from 1,200 feet above the surface from lat. 61°54′30″ N long. 166°10′00″ W, counterclockwise to lat. 61°40′00″ N long. 167°00′00″ W, to lat. 61°30′00″ N long. 167°10′00″ W, to lat. 61°20′00″ N long. 167°10′00″ W, to lat. 61°20′00″ N long. 166°30′00″ W, to lat. 61°40′00″ N long. 165°49′00″ W, thence to the point of beginning, excluding that airspace within the Hooper Bay Class E airspace area.

* * * * *

Issued in Anchorage, AK, on September 14, 2000.

Anthony M. Wylie,

Acting Manager, Air Traffic Division, Alaskan Region.

[FR Doc. 00–24485 Filed 9–22–00; 8:45 am]

BILLING CODE 4910–13–P

DEPARTMENT OF TRANSPORTATION

Federal Aviation Administration

14 CFR Part 71

[Airspace Docket No. 00–AAL–14]

Proposed Establishment of Class E Airspace; Tin City, AK

AGENCY: Federal Aviation Administration (FAA), DOT.

ACTION: Notice of proposed rulemaking.

SUMMARY: This action proposes to establish Class E airspace at the Long Range Radar (LRR) site at Tin City, AK. The United States Air Force requested this action to create controlled airspace for the instrument approach and departure procedures to runway (RWY) 34 and RWY 16 at Tin City, AK. This action is necessary in order for the approach and departure procedures to be published in the U.S. Government Flight Information Publication, U.S. Terminal Procedures—Alaska. Adoption of this proposal would result in the provision of adequate controlled airspace for Instrument Flight Rules (IFR) operations at Tin City, AK.

DATES: Comments must be received on or before November 9, 2000.

ADDRESSES: Send comments on the proposal in triplicate to: Manager, Operations Branch, AAL–530, Docket No. 00–AAL–14, Federal Aviation Administration, 222 West 7th Avenue, Box 14, Anchorage, AK 99513–7587.

The official docket may be examined in the Office of the Regional Counsel for the Alaskan Region at the same address.

An informal docket may also be examined during normal business hours in the Office of the Manager, Operations Branch, Air Traffic Division, at the address shown above and on the Internet at Alaskan Region's homepage at http://www.alaska.faa.gov/at or at address http://162.58.28.41/at.

FOR FURTHER INFORMATION CONTACT: Major Roger Stirm, Department of the Air Force Representative, Federal Aviation Administration, 222 West 7th Avenue, Box 14, Anchorage, AK 99513–7587; telephone number (907) 271–5892; fax: (907) 271-2850; email: Roger.Stirm@faa.gov. Internet address: http://www.alaska.faa.gov/at or at address http://162.58.28.41/at.

SUPPLEMENTARY INFORMATION:

Comments Invited

Interested parties are invited to participate in this proposed rulemaking by submitting such written data, views, or arguments as they may desire. Comments that provide the factual basis supporting the views and suggestions presented are particularly helpful in developing reasoned regulatory decisions on the proposal. Comments are specifically invited on the overall regulatory, aeronautical, economic, environmental, and energy-related aspects of the proposal. Communications should identify the airspace docket number and be submitted in triplicate to the address listed above. Commenters wishing the FAA to acknowledge receipt of their comments on this notice must submit with those comments a self-addressed, stamped postcard on which the following statement is made: ''Comments to Airspace Docket No. 00–AAL–14.'' The postcard will be date/time stamped and returned to the commenter. All communications received on or before the specified closing date for comments will be considered before taking action on the proposed rule. The proposal contained in this notice may be changed in light of comments received. All comments submitted will be available for examination in the Operations Branch, Air Traffic Division, Federal Aviation Administration, 222 West 7th Avenue, Box 14, Anchorage, AK, both before and after the closing date for comments. A report summarizing each substantive public contact with FAA personnel concerned with this rulemaking will be filed in the docket.

Availability of Notice of Proposed Rulemaking's (NPRM's)

An electronic copy of this document may be downloaded, using a modem and suitable communications software, from the FAA regulations section of the Fedworld electronic bulletin board service (telephone: 703–321–3339) or the Federal Register's electronic bulletin board service (telephone: 202–512–1661).

Internet users may reach the Federal Register's web page for access to recently published rulemaking documents at http://www.access.gpo.gov/su_docs/aces/aces140.html.

Any person may obtain a copy of this NPRM by submitting a request to the Operations Branch, AAL–530, Federal Aviation Administration, 222 West 7th Avenue, Box 14, Anchorage, AK 99513–7587. Communications must identify the notice number of this NPRM. Persons interested in being placed on a mailing list for future NPRM's should contact the individual(s) identified in the **FOR FURTHER INFORMATION CONTACT** section.

The Proposal

The FAA proposes to amend 14 CFR part 71 by establishing Class E airspace at Tin City, AK, to create controlled airspace for the instrument approach and departure procedures to RWY 34 and RWY 16, in order for the approach and departure procedures to be published in the U.S. Government Flight Information Publication, U.S. Terminal Procedures—Alaska. The intended effect of this proposal is to provide additional controlled airspace for IFR operations at Tin City, AK.

The area would be depicted on aeronautical charts for pilot reference. The coordinates for this airspace docket are based on North American Datum 83. The Class E airspace areas designated as 700/1200 foot transition areas are published in paragraph 6005 in FAA Order 7400.9H, *Airspace Designations and Reporting Points,* dated September 1, 2000, and effective September 16, 2000, which is incorporated by reference in 14 CFR 71.1. The Class E airspace designations listed in this document would be published subsequently in the Order.

The FAA has determined that this proposed regulation only involves an established body of technical regulations for which frequent and routine amendments are necessary to keep them operationally current. It, therefore—(1) is not a ''significant regulatory action'' under Executive Order 12866; (2) is not a ''significant rule'' under DOT Regulatory Policies and Procedures (44 FR 11034; February 26, 1979); and (3) does not warrant preparation of a regulatory evaluation as the anticipated impact is so minimal. Since this is a routine matter that will only affect air traffic procedures and air navigation, it is certified that this rule, when promulgated, will not have a significant economic impact on a substantial number of small entities under the criteria of the Regulatory Flexibility Act.

List of Subjects in 14 CFR Part 71

Airspace, Incorporation by reference, Navigation (air).

The Proposed Amendment

In consideration of the foregoing, the Federal Aviation Administration proposes to amend 14 CFR part 71 as follows:

PART 71—DESIGNATION OF CLASS A, CLASS B, CLASS C, CLASS D, AND CLASS E AIRSPACE AREAS; AIRWAYS; ROUTES; AND REPORTING POINTS

1. The authority citation for 14 CFR part 71 continues to read as follows:

Authority: 49 U.S.C. 106(g), 40103, 40113, 40120; E.O. 10854, 24 FR 9565, 3 CFR, 1959–1963 Comp., p. 389.

§ 71.1 [Amended]

2. The incorporation by reference in 14 CFR 71.1 of Federal Aviation Administration Order 7400.9H, *Airspace Designations and Reporting Points,* dated September 1, 2000, and effective September 16, 2000, is to be amended as follows:

* * * * *

Paragraph 6005 Class E airspace extending upward from 700 feet or more above the surface of the earth.

* * * * *

AAL AK E5 Tin City, AK [New]

Tin City LRRS, AK
(Lat. 65°33′37″ N., long. 167°55′18″ W.)

That airspace extending upward from 700 feet above the surface within a 7 mile radius of the Tin City LRRS; and that airspace extending upward from 1,200 feet above the surface from lat. 65°30′00″ N long. 168°10′00″ W, counterclockwise to lat. 65°15′00″ N long. 168°30′00″ W, to lat. 65°04′00″ N long. 168°00′00″ W, to lat. 65°04′00″ N long. 167°20′00″ W, to lat. 65°30′00″ N long. 167°20′00″ W, to lat. 65°38′00″ N long. 167°30′00″ W, to lat. 65°38′00″ N long. 167°42′00″ W, thence to the point of beginning.

* * * * *

Issued in Anchorage, AK, on September 14, 2000.

Anthony M. Wylie,

Acting Manager, Air Traffic Division, Alaskan Region.

[FR Doc. 00–24484 Filed 9–22–00; 8:45 am]

BILLING CODE 4910–13–P

DEPARTMENT OF TRANSPORTATION

Federal Aviation Administration

14 CFR Part 71

[Airspace Docket No. 00–AAL–15]

Proposed Establishment of Class E Airspace; Indian Mountain, AK

AGENCY: Federal Aviation Administration (FAA), DOT.

ACTION: Notice of proposed rulemaking.

SUMMARY: This action proposes to establish Class E airspace at the Long Range Radar (LRR) site at Indian Mountain, AK. The United States Air Force requested this action to create controlled airspace for the instrument approach and departure procedures to runway (RWY) 24 and RWY 06 at Indian Mountain, AK. This action is necessary in order for the approach and departure procedures to be published in the U.S. Government Flight Information Publication, U.S. Terminal Procedures—Alaska. Adoption of this proposal would result in the provision of adequate controlled airspace for Instrument Flight Rules (IFR) operations at Indian Mountain, AK.

DATES: Comments must be received on or before November 9, 2000.

ADDRESSES: Send comments on the proposal in triplicate to: Manager, Operations Branch, AAL–530, Docket No. 00–AAL–15, Federal Aviation Administration, 222 West 7th Avenue, Box 14, Anchorage, AK 99513–7587.

The official docket may be examined in the Office of the Regional Counsel for the Alaskan Region at the same address.

An informal docket may also be examined during normal business hours in the Office of the Manager, Operations Branch, Air Traffic Division, at the address shown above and on the Internet at Alaskan Region's homepage at http://www.alaska.faa.gov/at or at address http://162.58.28.41/at.

FOR FURTHER INFORMATION CONTACT: Major Roger Stirm, Department of the Air Force Representative, Federal Aviation Administration, 222 West 7th Avenue, Box 14, Anchorage, AK 99513–7587; telephone number (907) 271–5892; fax: (907) 271–2850; email: Roger.Stirm@faa.gov. Internet address: http://www.alaska.faa.gov/at or at address http://162.58.28.41/at.

SUPPLEMENTARY INFORMATION:

Comments Invited

Interested parties are invited to participate in this proposed rulemaking by submitting such written data, views, or arguments as they may desire. Comments that provide the factual basis supporting the views and suggestions presented are particularly helpful in developing reasoned regulatory decisions on the proposal. Comments are specifically invited on the overall regulatory, aeronautical, economic, environmental, and energy-related aspects of the proposal. Communications should identify the airspace docket number and be submitted in triplicate to the address listed above. Commenters wishing the FAA to acknowledge receipt of their comments on this notice must submit with those comments a self-addressed, stamped postcard on which the following statement is made:

''Comments to Airspace Docket No. 00–AAL–15.'' The postcard will be date/time stamped and returned to the commenter. All communications received on or before the specified closing date for comments will be considered before taking action on the proposed rule. The proposal contained in this notice may be changed in light of comments received. All comments submitted will be available for examination in the Operations Branch, Air Traffic Division, Federal Aviation Administration, 222 West 7th Avenue, Box 14, Anchorage, AK, both before and after the closing date for comments. A report summarizing each substantive public contact with FAA personnel concerned with this rulemaking will be filed in the docket.

Availability of Notice of Proposed Rulemaking's (NPRM's)

An electronic copy of this document may be downloaded, using a modem and suitable communications software, from the FAA regulations section of the Fedworld electronic bulletin board service (telephone: 703–321–3339) or the **Federal Register's** electronic bulletin board service (telephone: 202–512–1661).

Internet users may reach the **Federal Register's** web page for access to recently published rulemaking documents at http://www.access.gpo.gov/su__docs/aces/aces140.html.

Any person may obtain a copy of this NPRM by submitting a request to the Operations Branch, AAL–530, Federal Aviation Administration, 222 West 7th Avenue, Box 14, Anchorage, AK 99513–7587. Communications must identify the notice number of this NPRM. Persons interested in being placed on a mailing list for future NPRM's should contact the individual(s) identified in the **FOR FURTHER INFORMATION CONTACT** section.

The Proposal

The FAA proposes to amend 14 CFR part 71 by establishing Class E airspace at Indian Mountain, AK, to create controlled airspace for the instrument approach and departure procedures to RWY 24 and RWY 06, in order for the approach and departure procedures to be published in the U.S. Government Flight Information Publication, U.S. Terminal Procedures—Alaska. The intended effect of this proposal is to provide additional controlled airspace for IFR operations at Indian Mountain, AK.

The area would be depicted on aeronautical charts for pilot reference. The coordinates for this airspace docket are based on North American Datum 83. The Class E airspace areas designated as 700/1200 foot transition areas are published in paragraph 6005 in FAA Order 7400.9H, *Airspace Designations and Reporting Points,* dated September 1, 2000, and effective September 16, 2000, which is incorporated by reference in 14 CFR 71.1. The Class E airspace designations listed in this document would be published subsequently in the Order.

The FAA has determined that this proposed regulation only involves an established body of technical regulations for which frequent and routine amendments are necessary to keep them operationally current. It, therefore—(1) Is not a ''significant regulatory action'' under Executive Order 12866; (2) is not a ''significant rule'' under DOT Regulatory Policies and Procedures (44 FR 11034; February 26, 1979); and (3) does not warrant preparation of a regulatory evaluation as the anticipated impact is so minimal. Since this is a routine matter that will only affect air traffic procedures and air navigation, it is certified that this rule, when promulgated, will not have a significant economic impact on a substantial number of small entities under the criteria of the Regulatory Flexibility Act.

List of Subjects in 14 CFR Part 71

Airspace, Incorporation by reference, Navigation (air).

The Proposed Amendment

In consideration of the foregoing, the Federal Aviation Administration proposes to amend 14 CFR part 71 as follows:

PART 71—DESIGNATION OF CLASS A, CLASS B, CLASS C, CLASS D, AND CLASS E AIRSPACE AREAS; AIRWAYS; ROUTES; AND REPORTING POINTS

1. The authority citation for 14 CFR part 71 continues to read as follows:

Authority: 49 U.S.C. 106(g), 40103, 40113, 40120; E.O. 10854, 24 FR 9565, 3 CFR, 1959–1963 Comp., p. 389.

§ 71.1 [Amended]

2. The incorporation by reference in 14 CFR 71.1 of Federal Aviation Administration Order 7400.9H, *Airspace Designations and Reporting Points,* dated September 1, 2000, and effective September 16, 2000, is to be amended as follows:

* * * * *

Paragraph 6005 Class E airspace extending upward from 700 feet or more above the surface of the earth.

* * * * *

AAL AK E5 Indian Mountain, AK [New]

Indian Mountain LRRS, AK
(Lat. 66°59′34″ N., long. 153°42′16″ W.)

That airspace extending upward from 700 feet above the surface within a 4 mile radius of Indian Mountain LRRS; and that adjacent airspace extending upward from 1,200 feet above the surface from lat. 66°00′00″ N long. 153°00′00″ W, counterclockwise to lat. 66°50′00″ N long. 153°00′00″ W, to lat. 66°50′00″ N long. 156°00′00″ W, to lat. 66°00′00″ N long. 156°00′00″ W, thence along the 66° latitude to the point of beginning.

* * * * *

Issued in Anchorage, AK, on September 14, 2000.

Anthony M. Wylie,

Acting Manager, Air Traffic Division, Alaskan Region.

[FR Doc. 00–24483 Filed 9–22–00; 8:45 am]

BILLING CODE 4910–13–P

DEPARTMENT OF TRANSPORTATION

Federal Aviation Administration

14 CFR Part 71

[Airspace Docket No. 00–AAL–11]

Proposed Establishment of Class E Airspace; Cape Lisburne, AK

AGENCY: Federal Aviation Administration (FAA), DOT.

ACTION: Notice of proposed rulemaking.

SUMMARY: This action proposes to establish Class E airspace at the Long Range Radar (LRR) site at Cape Lisburne, AK. The United States Air Force requested this action to create controlled airspace for the instrument approach and departure procedures to runway (RWY) 26 and RWY 08 at Cape Lisburne, AK. This action is necessary in order for the approach and departure procedures to be published in the U.S. Government Flight Information Publication, U.S. Terminal Procedures—Alaska. Adoption of this proposal would result in the provision of adequate controlled airspace for Instrument Flight Rules (IFR) operations at Cape Lisburne, AK.

DATES: Comments must be received on or before November 9, 2000.

ADDRESSES: Send comments on the proposal in triplicate to: Manager, Operations Branch, AAL–530, Docket No. 00–AAL–11, Federal Aviation Administration, 222 West 7th Avenue, Box 14, Anchorage, AK 99513–7587.

The official docket may be examined in the Office of the Regional Counsel for the Alaskan Region at the same address.

An informal docket may also be examined during normal business hours in the Office of the Manager, Operations Branch, Air Traffic Division, at the address shown above and on the Internet at Alaskan Region's homepage at http://www.alaska.faa.gov/at or at address http://162.58.28.41/at.

FOR FURTHER INFORMATION CONTACT: Major Roger Stirm, Department of the Air Force Representative, Federal Aviation Administration, 222 West 7th Avenue, Box 14, Anchorage, AK 99513–7587; telephone number (907) 271–5892; fax: (907) 271–2850; email: Roger.Stirm@faa.gov. Internet address: http://www.alaska.faa.gov/at or at address http://162.58.28.41/at.

SUPPLEMENTARY INFORMATION:

Comments Invited

Interested parties are invited to participate in this proposed rulemaking by submitting such written data, views, or arguments as they may desire. Comments that provide the factual basis supporting the views and suggestions presented are particularly helpful in developing reasoned regulatory decisions on the proposal. Comments are specifically invited on the overall regulatory, aeronautical, economic, environmental, and energy-related aspects of the proposal. Communications should identify the airspace docket number and be submitted in triplicate to the address listed above. Commenters wishing the FAA to acknowledge receipt of their comments on this notice must submit with those comments a self-addressed, stamped postcard on which the following statement is made: ''Comments to Airspace Docket No. 00–AAL–11.'' The postcard will be date/time stamped and returned to the commenter. All communications received on or before the specified closing date for comments will be considered before taking action on the proposed rule. The proposal contained in this notice may be changed in light of comments received. All comments submitted will be available for examination in the Operations Branch, Air Traffic Division, Federal Aviation Administration, 222 West 7th Avenue, Box 14, Anchorage, AK, both before and after the closing date for comments. A report summarizing each substantive public contact with FAA personnel concerned with this rulemaking will be filed in the docket.

Availability of Notice of Proposed Rulemaking's (NPRM's)

An electronic copy of this document may be downloaded, using a modem and suitable communications software, from the FAA regulations section of the Fedworld electronic bulletin board service (telephone: 703–321–3339) or the Federal Register's electronic bulletin board service (telephone: 202–512–1661).

Internet users may reach the Federal Register's web page for access to recently published rulemaking documents at http://www.access.gpo.gov/su__docs/aces/aces140.html.

Any person may obtain a copy of this NPRM by submitting a request to the Operations Branch, AAL–530, Federal Aviation Administration, 222 West 7th Avenue, Box 14, Anchorage, AK 99513–7587. Communications must identify the notice number of this NPRM. Persons interested in being placed on a mailing list for future NPRM's should contact the individual(s) identified in the **FOR FURTHER INFORMATION CONTACT** section.

The Proposal

The FAA proposes to amend 14 CFR part 71 by establishing Class E airspace at Cape Lisburne, AK, to create controlled airspace for the instrument approach and departure procedures to RWY 26 and RWY 08, in order for the approach and departure procedures to be published in the U.S. Government Flight Information Publication, U.S. Terminal Procedures—Alaska. The intended effect of this proposal is to provide additional controlled airspace for IFR operations at Cape Lisburne, AK.

The area would be depicted on aeronautical charts for pilot reference. The coordinates for this airspace docket are based on North American Datum 83. The Class E airspace areas designated as 700/1200 foot transition areas are published in paragraph 6005 in FAA Order 7400.9H, *Airspace Designations and Reporting Points*, dated September 1, 2000, and effective September 16, 2000, which is incorporated by reference in 14 CFR 71.1. The Class E airspace designations listed in this document would be published subsequently in the Order.

The FAA has determined that this proposed regulation only involves an established body of technical regulations for which frequent and routine amendments are necessary to keep them operationally current. It, therefore—(1) is not a ''significant regulatory action'' under Executive Order 12866; (2) is not a ''significant rule'' under DOT Regulatory Policies and Procedures (44 FR 11034; February 26, 1979); and (3) does not warrant preparation of a regulatory evaluation as the anticipated impact is so minimal. Since this is a routine matter that will only affect air traffic procedures and air navigation, it is certified that this rule, when promulgated, will not have a significant economic impact on a substantial number of small entities under the criteria of the Regulatory Flexibility Act.

List of Subjects in 14 CFR Part 71

Airspace, Incorporation by reference, Navigation (air).

The Proposed Amendment

In consideration of the foregoing, the Federal Aviation Administration proposes to amend 14 CFR part 71 as follows:

PART 71— DESIGNATION OF CLASS A, CLASS B, CLASS C, CLASS D, AND CLASS E AIRSPACE AREAS; AIRWAYS; ROUTES; AND REPORTING POINTS

1. The authority citation for 14 CFR part 71 continues to read as follows:

Authority: 49 U.S.C. 106(g), 40103, 40113, 40120; E.O. 10854, 24 FR 9565, 3 CFR, 1959–1963 Comp., p. 389.

§ 71.1 [Amended]

2. The incorporation by reference in 14 CFR 71.1 of Federal Aviation Administration Order 7400.9H, *Airspace Designations and Reporting Points*, dated September 1, 2000, and effective September 16, 2000, is to be amended as follows:

* * * * *

Paragraph 6005 Class E airspace extending upward from 700 feet or more above the surface of the earth.

* * * * *

AAL AK E5 Cape Lisburne, AK [New]

Cape Lisburne LRRS, AK
(Lat. 68°52′31″ N., long. 166°06′36″ W.)

That airspace extending upward from 700 feet above the surface within a 7 mile radius of the Cape Lisburne LRRS; and that airspace extending upward from 1,200 feet above the surface from lat. 68°49′00″ N long. 165°50′00″ W, counterclockwise to lat. 68°49′00″ N long. 165°30′00″ W, to lat. 69°00′00″ N long. 164°35′00″ W, to lat. 69°15′00″ N long. 164°45′00″ W, to lat. 69°15′00″ N long. 165°30′00″ W, to lat. 68°57′00″ N long. 166°20′00″ W, thence to the point of beginning.

* * * * *

Issued in Anchorage, AK, on September 14, 2000.

Anthony M. Wylie,

Acting Manager, Air Traffic Division, Alaskan Region.

[FR Doc. 00–24482 Filed 9–22–00; 8:45 am]

BILLING CODE 4910–13–P

DEPARTMENT OF TRANSPORTATION

Federal Aviation Administration

14 CFR Part 71

[Airspace Docket No. 00–AAL–12]

Proposed Establishment of Class E Airspace; Cape Newenham, AK

AGENCY: Federal Aviation Administration (FAA), DOT.

ACTION: Notice of proposed rulemaking.

SUMMARY: This action proposes to establish Class E airspace at the Long Range Radar (LRR) site at Cape Newenham, AK. The United States Air Force requested this action to create controlled airspace for the instrument approach and departure procedures to runway (RWY) 14 and RWY 32 at Cape Newenham, AK. This action is necessary in order for the approach and departure procedures to be published in the U.S. Government Flight Information Publication, U.S. Terminal Procedures—Alaska. Adoption of this proposal would result in the provision of adequate controlled airspace for Instrument Flight Rules (IFR) operations at Cape Newenham, AK.

DATES: Comments must be received on or before November 9, 2000.

ADDRESSES: Send comments on the proposal in triplicate to: Manager, Operations Branch, AAL–530, Docket No. 00–AAL–12, Federal Aviation Administration, 222 West 7th Avenue, Box 14, Anchorage, AK 99513–7587.

The official docket may be examined in the Office of the Regional Counsel for the Alaskan Region at the same address.

An informal docket may also be examined during normal business hours in the Office of the Manager, Operations Branch, Air Traffic Division, at the address shown above and on the Internet at Alaskan Region's homepage at http://www.alaska.faa.gov/at or at address http://162.58.28.41/at.

FOR FURTHER INFORMATION CONTACT: Major Roger Stirm, Department of the Air Force Representative, Federal Aviation Administration, 222 West 7th Avenue, Box 14, Anchorage, AK 99513–7587; telephone number (907) 271–5892; fax: (907) 271–2850; email: Roger.Stirm@faa.gov. Internet address: http://www.alaska.faa.gov/at or at address http://162.58.28.41/at.

SUPPLEMENTARY INFORMATION:

Comments Invited

Interested parties are invited to participate in this proposed rulemaking by submitting such written data, views, or arguments as they may desire. Comments that provide the factual basis supporting the views and suggestions presented are particularly helpful in developing reasoned regulatory decisions on the proposal. Comments are specifically invited on the overall regulatory, aeronautical, economic, environmental, and energy-related aspects of the proposal. Communications should identify the airspace docket number and be submitted in triplicate to the address listed above. Commenters wishing the FAA to acknowledge receipt of their comments on this notice must submit with those comments a self-addressed, stamped postcard on which the following statement is made: ''Comments to Airspace Docket No. 00–AAL–12.'' The postcard will be date/time stamped and returned to the commenter. All communications received on or before the specified closing date for comments will be considered before taking action on the proposed rule. The proposal contained in this notice may be changed in light of comments received. All comments submitted will be available for examination in the Operations Branch, Air Traffic Division, Federal Aviation Administration, 222 West 7th Avenue, Box 14, Anchorage, AK, both before and after the closing date for comments. A report summarizing each substantive public contact with FAA personnel concerned with this rulemaking will be filed in the docket.

Availability of Notice of Proposed Rulemaking's (NPRM's)

An electronic copy of this document may be downloaded, using a modem and suitable communications software, from the FAA regulations section of the Fedworld electronic bulletin board service (telephone: 703–321–3339) or the **Federal Register**'s electronic bulletin board service (telephone: 202–512–1661).

Internet users may reach the **Federal Register**'s web page for access to recently published rulemaking documents at http://www.access.gpo.gov/su_docs/aces/aces140.html.

Any person may obtain a copy of this NPRM by submitting a request to the Operations Branch, AAL–530, Federal Aviation Administration, 222 West 7th Avenue, Box 14, Anchorage, AK 99513–7587. Communications must identify the notice number of this NPRM. Persons interested in being placed on a mailing list for future NPRM's should contact the individual(s) identified in the **FOR FURTHER INFORMATION CONTACT** section.

The Proposal

The FAA proposes to amend 14 CFR part 71 by establishing Class E airspace at Cape Newenham, AK, to create controlled airspace for the instrument approach and departure procedures to RWY 14 and RWY 32, in order for the approach and departure procedures to be published in the U.S. Government Flight Information Publication, U.S. Terminal Procedures—Alaska. The intended effect of this proposal is to provide additional controlled airspace for IFR operations at Cape Newenham, AK.

The area would be depicted on aeronautical charts for pilot reference. The coordinates for this airspace docket are based on North American Datum 83. The Class E airspace areas designated as 700/1200 foot transition areas are published in paragraph 6005 in FAA Order 7400.9H, *Airspace Designations and Reporting Points*, dated September 1, 2000, and effective September 16, 2000, which is incorporated by reference in 14 CFR 71.1. The Class E airspace designations listed in this document would be published subsequently in the Order.

The FAA has determined that this proposed regulation only involves an established body of technical regulations for which frequent and routine amendments are necessary to keep them operationally current. It, therefore—(1) is not a ''significant regulatory action'' under Executive Order 12866; (2) is not a ''significant rule'' under DOT Regulatory Policies and Procedures (44 FR 11034; February 26, 1979); and (3) does not warrant preparation of a regulatory evaluation as the anticipated impact is so minimal. Since this is a routine matter that will only affect air traffic procedures and air navigation, it is certified that this rule, when promulgated, will not have a significant economic impact on a substantial number of small entities under the criteria of the Regulatory Flexibility Act.

List of Subjects in 14 CFR Part 71

Airspace, Incorporation by reference, Navigation (air).

The Proposed Amendment

In consideration of the foregoing, the Federal Aviation Administration

proposes to amend 14 CFR part 71 as follows:

PART 71— DESIGNATION OF CLASS A, CLASS B, CLASS C, CLASS D, AND CLASS E AIRSPACE AREAS; AIRWAYS; ROUTES; AND REPORTING POINTS

1. The authority citation for 14 CFR part 71 continues to read as follows:

Authority: 49 U.S.C. 106(g), 40103, 40113, 40120; E.O. 10854, 24 FR 9565, 3 CFR, 1959–1963 Comp., p. 389.

§ 71.1 [Amended]

2. The incorporation by reference in 14 CFR 71.1 of Federal Aviation Administration Order 7400.9H, *Airspace Designations and Reporting Points*, dated September 1, 2000, and effective September 16, 2000, is to be amended as follows:

* * * * *

Paragraph 6005 Class E airspace extending upward from 700 feet or more above the surface of the earth.

* * * * *

AAL AK E5 Cape Newenham, AK [New]

Cape Newenham LRRS, AK
(Lat. 58°38′47″ N., long. 162°03′46″ W.)

That airspace extending upward from 700 feet above the surface within a 7 mile radius of the Cape Newenham LRRS; and that airspace extending upward from 1,200 feet above the surface from lat. 58°38′00″ N long. 162°18′00″ W, clockwise to lat. 58°50′00″ N long. 162°26′00″ W, to lat. 59°14′00″ N long. 162°26′00″ W, to lat. 59°14′00″ N long. 161°35′00″ W, to lat. 59°00′00″ N long. 161°35′00″ W, to the point of beginning.

* * * * *

Issued in Anchorage, AK, on September 14, 2000.

Anthony M. Wylie,

Acting Manager, Air Traffic Division, Alaskan Region.

[FR Doc. 00–24481 Filed 9–22–00; 8:45 am]

BILLING CODE 4910–13–P

DEPARTMENT OF JUSTICE

Drug Enforcement Administration

21 CFR Part 1310

[DEA Number 198P]

RIN 1117–AA57

Control of Red Phosphorus, White Phosphorus and Hypophosphorous Acid (and Its Salts) as List I Chemicals

AGENCY: Drug Enforcement Administration (DEA), Justice.

ACTION: Notice of Proposed Rulemaking.

SUMMARY: The Comprehensive Drug Abuse Prevention and Control Act (hereinafter the ''Controlled Substances Act'' or ''CSA'') provides the Attorney General with the authority to specify by regulation, additional chemicals as ''List I'' chemicals if they are used in the manufacture of a controlled substance in violation of the CSA and are important to the manufacture of the controlled substance. Because of their use and importance in the illicit manufacture of methamphetamine, a Schedule II controlled substance, the DEA is proposing the addition of red phosphorus, white phosphorus (also known as yellow phosphorus) and hypophosphorous acid (and its salts) as List I chemicals.

These phosphorus chemicals have been identified as being important chemicals for the illicit production of methamphetamine. As List I chemicals, handlers of these materials will be subject to CSA chemical regulatory controls including registration, recordkeeping, reporting, and import/export requirements. The Drug Enforcement Administration (DEA) has determined that these controls are necessary to prevent the diversion of these chemicals to clandestine drug laboratories.

Given the small quantities and limited uses of these chemicals necessary for the production of methamphetamine, the DEA is proposing that no threshold be established for domestic and international transactions. As such, all transactions (regardless of size) shall be considered regulated transactions, subject to recordkeeping, reporting and/or import/export notification requirements.

DATES: Written comments must be submitted on or before November 24, 2000.

ADDRESSES: Comments should be submitted in triplicate to the Deputy Administrator, Drug Enforcement Administration, Washington, DC 20537, Attention: DEA Federal Register Representative/CCR.

FOR FURTHER INFORMATION CONTACT: Frank L. Sapienza, Chief, Drug and Chemical Evaluation Section, Office of Diversion Control, Drug Enforcement Administration, Washington D.C. 20537 at (202) 307–7183.

SUPPLEMENTARY INFORMATION:

What Is the Purpose of This Notice?

The Controlled Substances Act (CSA) and its implementing regulations, specifically 21 U.S.C. 802(34) and 21 CFR 1310.02 (c), provide the Attorney General with the authority to specify, by regulation, additional chemicals as ''List I'' chemicals if they are used in the manufacture of a controlled substance in violation of the CSA and are important to the manufacture of the controlled substance. This authority has been delegated to the Administrator of DEA by 28 CFR 0.100 and redelegated to the Deputy Administrator under 28 CFR 0.104 (Subpart R) Appendix Sec. 12.

This notice proposes the addition of red phosphorus, white phosphorus (also known as yellow phosphorus) and hypophosphorous acid (and its salts) as List I chemicals. Additionally, this notice proposes that no threshold be established for domestic and international transactions.

What Specific Chemicals Does This Proposed Regulation Include? What Related Chemicals Will Not Be Subject to This Control Action?

Phosphorus is a nonmetallic element that can occur in three main allotropic (*i.e.* crystalline) forms (white, red and black). Elemental phosphorus is derived from phosphate rock. The most abundant variety produced is white phosphorus (also known as yellow phosphorus). Most other forms of phosphorus and phosphorus chemicals are produced from white phosphorus. The white form is extremely flammable and toxic and must be stored and shipped in water.

The second crystalline form is red phosphorus. Red phosphorus is usually prepared as a powder and is more stable and less toxic than the white form. A black crystalline form of phosphorus is also occasionally made and is similar to graphite in its physical, thermal and electrical properties.

The DEA is proposing that the white and red forms of elemental phosphorus be designated as List I chemicals. Black phosphorus and phosphate rock will not be affected by this proposed action.

Additionally, the DEA is proposing to designate hypophosphorous acid and its salts as List I chemicals. While hypophosphorous acid (H3PO2) is most commonly sold as 10%, 30% or 50% solutions, the DEA is proposing the control of all aqueous dilutions of hypophosphorous acid. Salts of hypophosphorous acid are known as hypophosphite salts. The DEA is also proposing that these salts be included as List I chemicals. Examples of these salts include: ammonium hypophosphite, calcium hypophosphite, iron hypophosphite, potassium hypophosphite, manganese hypophosphite, magnesium hypophosphite and sodium hypophosphite. Sodium hypophosphite is the most commercially available salt and is distributed in a white crystalline form.

What Is Phosphorus Used for and How Large Is the Industry?

DEA's research indicates that there are currently only two domestic producers of elemental phosphorus. The primary material derived from phosphate rock is white phosphorus. Other forms of phosphorus and other phosphorus chemicals are manufactured from white phosphorus. DEA obtained 1998 and 1999 sales data from both producers. Over a two-year period, the two firms had only a few customers. Each customer appears to be a large industrial firm.

The DEA reviewed independent data for 1997 indicating that approximately 250,000 metric tons of elemental phosphorus were consumed in the U.S. Most consumers are large entities, which primarily use elemental phosphorous in the manufacture of phosphorous chemicals not impacted by this proposed regulation.

White phosphorus is primarily used to produce phosphoric acid and other phosphorus compounds including phosphorus trichloride and phosphorous pentasulfide and phosphorus pentoxide. Over 98% of the annual U.S. phosphorus demand is used in the production of these four compounds, none of which is subject to this proposed action.

Industrial uses of red phosphorus include the manufacture of pyrotechnics, safety matches, phosphoric acid and other phosphorus compounds, fertilizers, incendiary shells, smoke bombs, tracer bullets, and pesticides. Very small volumes are used to produce ultra-high-purity phosphorus semiconductor grades) for application in the electronics industry.

Hypophosphorous acid is commonly used by large industry as a bleaching, color stabilization or decoloring agent for plastics, synthetic fibers (primarily polyester) and chemicals. It is also used in the preparation of hypophosphite salts, which are in turn used in synthetic fibers as wetting agents, dispersing agents, anti-static agents and emulsifying agents. Hypophosphorous acid is also used as a chemical intermediate in organic syntheses and as a polymerization and polycondensation catalyst. It also has applications as a reducing agent and as an antioxidant.

The two most common salts of hypophosphorous acid are sodium hypophosphite and manganese hypophosphite. The sodium salt is used primarily in electroless nickel plating. It is also used as a reducing agent, analytical reagent, polymerization catalyst, polymer stabilizer, and fire retardant. While the manganese salt is used primarily in nylon fiber production, it also has application as a chemical intermediate. The DEA has identified two manufacturers of sodium hypophosphite in the United States.

Why Does the DEA Believe That Control of Red Phosphorus, White Phosphorus, and Hypophosphorous Acid (and Its Salts) Is Necessary?

The DEA has identified these chemicals as being used in the illicit production of methamphetamine. The public health consequences of the manufacture, trafficking, and abuse of methamphetamine are well known and documented.

These phosphorus chemicals play an important role in the chemical reaction to produce methamphetamine. A review of the 50 largest methamphetamine laboratories seized by DEA in 1998 was recently conducted. The study revealed that in those instances where the production method could be ascertained, red phosphorus was used in 87% of these laboratories. Additionally, a review of calendar years 1998–1999 clandestine laboratory seizure data (reported by the El Paso Intelligence Center and the Western States Information Network) indicated that more than 3750 seized methamphetamine laboratories were confirmed as utilizing phosphorus.

The majority of clandestine methamphetamine laboratories seized in the U.S. utilize phosphorus chemicals as catalysts to drive the chemical conversion of ephedrine or pseudoephedrine to methamphetamine. Since catalysts are necessary for the preferred method used by illicit laboratory operators, these phosphorus chemicals are important to the production of methamphetamine.

While the vast majority of these laboratories utilized red phosphorus, DEA is aware that a number of seized laboratories have used white phosphorus. DEA believes that the use of white phosphorus is under-reported. Many forensic laboratories do not differentiate samples as being white versus red phosphorus. These analytical laboratories have historically identified seized material simply as 'phosphorus'.

The Idaho State Police, however, have closely monitored the illicit use of white phosphorus. Their information indicates that in southeastern Idaho, white phosphorus is frequently encountered in methamphetamine laboratories. From 1997 through the first quarter of 2000, 86 methamphetamine laboratories were seized in this region of Idaho. White phosphorus was encountered at 35 of these laboratories; red phosphorus was encountered at 27 laboratories and the type of phosphorus was not identified at 24 of these laboratories.

Recently the DEA has noted a small but increasing use of hypophosphorous acid at seized clandestine laboratories. During 1998, the DEA identified a total of only six methamphetamine laboratories utilizing hypophosphorous acid. In 1999, the DEA documented an additional 48 laboratories utilizing hypophosphorous acid. The trend continues into calendar year 2000.

The DEA has also noted that detailed recipes describing the production of methamphetamine (using red phosphorus, white phosphorus and hypophosphorous acid) are being disseminated on the Internet. If red phosphorus alone is controlled, DEA has concluded that clandestine laboratory operators would rapidly move to white phosphorus and hypophosphorous acid. This would be an undesired consequence, since both the white phosphorus and hypophosphorous acid methods of illicit methamphetamine production are significantly more hazardous methods. White phosphorus is much more flammable and toxic than red phosphorus. If not stored in a solution, white phosphorus spontaneously combusts. The hypophosphorous acid method is also extremely hazardous since it produces phosphine gas. If not confined within the reaction vessel, ingestion of this poisonous gas can result in death. Therefore, use of these alternate methods poses increased hazards for both law enforcement and for the public.

Based on analysis of chemistry and actual illicit use, DEA finds that these three chemicals are important to the manufacture of methamphetamine and therefore meet the definition of List I chemicals. Hence, this Notice proposes that these chemicals be subject to CSA regulatory controls for List I chemicals, including registration, recordkeeping, reporting, and import/export requirements as specified in 21 CFR parts 1309, 1310 and 1313. DEA believes that these regulatory controls are needed to prevent the diversion of these phosphorus chemicals to clandestine laboratories.

What Regulatory Controls Will Apply to These Chemicals?

As List I chemicals, red phosphorus, white phosphorus, and hypophosphorous acid and its salts will become subject to the chemical regulatory control provisions and civil and criminal sanctions of the CSA. As such, recordkeeping, reporting and import/export notification requirements (as described in 21 U.S.C. 830 and 971

and 21 CFR parts 1310 and 1313) shall apply. Manufacturers, distributors, importers and exporters of white phosphorus, red phosphorus and hypophosphorous acid (and its salts) will be required to register with the DEA pursuant to 21 U.S.C. 822 and 823 and 21 CFR part 1309.

Handlers of these chemicals will also be required to maintain records and meet CSA import/export notification requirements for ''regulated transactions'' of these chemicals. The CSA (21 U.S.C. 802(39)) defines the term ''regulated transaction'' as a ''distribution, receipt, sale, importation, or exportation of, or an international transaction involving the shipment of, a listed chemical, or if the Attorney General establishes a threshold amount for a specific listed chemical,'' a transaction involving a threshold amount''. The CSA, therefore, provides the Attorney General with authority to establish a threshold amount for ''listed chemicals'' if the Attorney General so elects.

Why Is No Threshold Being Established?

As noted above, these chemicals are used as catalysts in the illicit synthesis of methamphetamine. Therefore, the manufacture of methamphetamine requires only small quantities of these chemicals.

DEA has not been able to identify any household uses for red phosphorus, white phosphorus or hypophosphorous acid and its salts. However, these materials are being distributed in small quantities via Internet on-line auctions and through chemical supply houses directly to consumers. It is common to find 500 ml bottles of hypophosphorous acid or multi-ounce quantities of red phosphorus repackaged in unlabeled bags at seized laboratories.

Therefore the DEA believes that all transactions should be regulated, regardless of size, to prevent the diversion of these phosphorus chemicals to clandestine laboratories. This notice proposes, therefore, that no threshold be established for domestic and international transactions.

What Steps Has the DEA Taken To Solicit Information From the Legitimate Phosphorus Industry?

DEA recognizes that these chemicals have legitimate industrial uses and that regulation of these phosphorus chemicals may have some effect upon certain industries. Therefore, DEA has sought information on the phosphorus chemical trade so that diversion of these chemicals may be prevented with minimal impact on legitimate industry.

Since red phosphorus was the phosphorus chemical most frequently encountered in clandestine methamphetamine laboratories, the DEA initially published an Advance Notice of Proposed Rulemaking on February 2, 2000 (65 FR 4913) to solicit input from potentially affected parties regarding: (1) The nature of the legitimate red phosphorus industry; (2) the legitimate uses of red phosphorus at all levels of distribution (including industrial uses and use by individual end-users at the retail level of distribution); (3) the potential burden such regulatory controls may have on legitimate industry (particularly with respect to the impact on small businesses); (4) the potential number of individuals/firms which may be adversely affected by increased regulatory requirements; and (5) any other information on the manner of manufacturing, distribution, consumption, storage, disposal, and uses of red phosphorus by industry and others. Both quantitative and qualitative data were invited.

The DEA did not receive any comments or input from the phosphorus industry in response to this Notice. The DEA did receive six comments from law enforcement entities and two comments from Federal prosecutors in support of the control of red phosphorus as a listed chemical.

Since laboratory seizure data sparked concerns over the illicit use of white phosphorus and hypophosphorous acid, the DEA broadened the scope of its research to include the entire phosphorus chemical industry. Since no industry input was received in response to the Advance Notice of Proposed Rulemaking, DEA directly contacted domestic producers of elemental phosphorus and importers of phosphorus chemicals.

What Portion of the Phosphorus Industry Is Potentially Impacted by This Regulation? Why Does DEA Believe That This Regulation Will Not Impose a Significant Burden on a Substantially Large Number of Firms?

DEA has identified only two domestic producers of white phosphorus. While producers of white phosphorus will be required to register with DEA and maintain records of each regulated transaction (*i.e.* all transactions of these chemicals), over 98% of the phosphorus distributed by these two producers is eventually converted to a form not impacted by this proposed regulation. Handlers which acquire phosphorus and convert it to non-regulated forms will not be subject to CSA regulatory requirements.

The remaining 2% of the phosphorus (used domestically) is utilized in its elemental form (*i.e.* as red phosphorus or white phosphorus) or used to produce all other phosphorus chemicals including sodium hypophosphite and hypophosphorous acid. Therefore, this proposed regulation will only affect the distribution of less than 2% of the industry at the end user level. It is believed that there are few firms handling these regulated forms (*i.e.* red phosphorus, white phosphorus and hypophosphorous acid and its salts.) Additionally, it appears that these chemicals have only industrial uses. The DEA has not been able to identify any 'household' uses for red phosphorus, white phosphorus, or hypophosphorous acid (and its salts).

In an effort to better estimate the potential impact of this proposed action, the DEA conducted an analysis of various data sources relating to the manufacture, distribution, and use of phosphorus, hypophosphorous acid, and the hypophosphites. This included an analysis of current chemical producers and marketing directories (to identify companies listing themselves as sources of these chemicals). In addition, Material Safety Data Sheets (MSDSs) were collected. Companies creating MSDSs for chemicals are likely to manufacture or distribute the chemicals.

DEA also examined Environmental Protection Agency (EPA) reporting requirements pertaining to phosphorus, hypophosphorous acid, and the hypophosphites. Of the three chemicals subject to this proposed rule, only phosphorus is regulated under programs that require reporting to EPA. Phosphorus is covered by the Toxic Release Inventory (TRI) program, which requires an annual report to EPA listing the maximum quantity on site, the uses of the chemical, releases to the environment, and transfers offsite. The TRI data have the advantage that they provide information on the quantity of a chemical transferred offsite as a waste, and the name of the offsite treatment facility. The last element is important because, while there are few manufacturers of the chemical, there are users who may come under the proposed regulations because they distribute the chemical to waste treatment facilities.

Phosphorus is also subject to Department of Transportation (DOT) hazardous material (''hazmat'') regulations so that interstate and intrastate transportation require shipping papers. Additionally, hypophosphorous acid is covered in interstate commerce. The MSDSs located for the hypophosphites indicate

that they are not covered by the DOT hazmat rules.

The analysis concluded that there are only two bulk manufacturers of phosphorus, most of whose product is sold to chemical manufacturers or exported. A limited number of other facilities manufacture phosphorus as a by-product or import phosphorus. The hypophosphites are similarly produced by very few facilities. The analysis identified two main producers of the hypophosphites. Additionally, two producers of hypophosphorous acid were identified. One of the two producers recently acquired the other. Therefore, only five manufacturers are likely to be affected by this proposed regulation.

A review of chemical marketing directories identified at least 39 companies, other than the manufacturers, that claim to sell these substances.

In 1998, 53 facilities reported to EPA for phosphorus. Most of these companies would not be required to register with DEA unless they sell phosphorus or transfer it offsite. Twenty-one of the 53 facilities reporting phosphorus under TRI sent phosphorus offsite to 30 separate places for treatment as waste. Many of the transfers were for recovery or recycling and a few were for disposal in landfills. A few reported releasing the substance to publicly owned treatment works (*i.e.,* wastewater treatment).

This waste material would likely be considered a chemical mixture containing phosphorus. While chemical mixtures are currently exempt from CSA chemical regulatory requirements, the DEA is preparing regulations pertaining to such mixtures.

This proposed regulation is not considered to have an impact upon a substantial number of firms, given the limited distribution of these three chemicals. Additionally, it is likely that the CSA recordkeeping requirements are already being met as part of normal business practice. For phosphorus, compliance with EPA and DOT regulations should document distributions to customers and offsite waste transfers. Hypophosphorous acid shipments should be documented, but shipments of the hypophosphites may not be. Nonetheless, it is likely that chemical distributors do maintain records of shipments and customers even if shipping papers are not required.

How Many Importers and Exporters Are Potentially Affected?

According to 1999 maritime data (as reported by the Pier Import Export Reporting Service), imports of phosphorus chemicals into the U.S. totaled 101 shipments for a total of 2,500 metric tons to 36 different firms. U.S. exports totaled approximately 180 shipments of 4,300 metric tons by 32 firms.

Prior to preparing this proposal the DEA also solicited information directly from importers. This data indicated that most all the material appeared to be for large industrial uses.

As Part of This Proposed Rulemaking, the DEA Again Invites Input Regarding the Legitimate Uses for These Chemicals

This notice solicits input regarding: (1) The nature of the legitimate phosphorus industry; (2) the legitimate uses of phosphorus at all levels of distribution (including industrial uses and use by individual end-users at the retail level of distribution); (3) the potential impact such regulatory controls may have on legitimate industry (particularly with respect to the impact on small businesses); (4) the potential number of individuals/firms which may be affected by increased regulatory requirements; and (5) any other information on the manner of manufacturing, distribution, consumption, storage, disposal, and uses of phosphorus by industry and others. Comments must be submitted on or before November 24, 2000.

The Deputy Administrator hereby certifies that this rulemaking has been drafted in a manner consistent with the principles of the Regulatory Flexibility Act (5 U.S.C. 601 *et seq.*). It will not have a significant economic impact on a substantial number of small business entities.

The Deputy Administrator further certifies that this rulemaking has been drafted in accordance with the principles in Executive Order 12866 section 1(b). DEA has determined that this is not a significant rulemaking action. Therefore, this action has not been reviewed by the Office of Management and Budget.

This regulation meets the applicable standards set forth in Sections 3(a) and 3(b)(2) of Executive Order 12988, Civil Justice Reform.

This action has been analyzed in accordance with the principles and criteria in Executive Order 13132, and it has been determined that this rule does not have sufficient federalism implications to warrant the preparation of a Federalism Assessment.

This rule will not result in the expenditure by state, local, and tribal governments, in the aggregate, or by the private sector, of $100,000,000 or more in any one year, and will not significantly or uniquely affect small governments. Therefore, no actions were deemed necessary under the provisions of the Unfunded Mandates Reform Act of 1995.

This rule is not a major rule as defined by Section 804 of the Small Business Regulatory Enforcement Fairness Act of 1996. This rule will not result in an annual effect on the economy of $100,000,000 or more; a major increase in costs or prices; or significant adverse effects on competition, employment, investment, productivity, innovation, or on the ability of United States-based companies to compete with foreign-based companies in domestic and export markets.

The Drug Enforcement Administration makes every effort to write clearly. If you have suggestions as to how to improve the clarity of this regulation, call or write Patricia M. Good, Chief, Liaison and Policy Section, Office of Diversion Control, Drug Enforcement Administration, Washington, DC 20537, telephone (202) 307–7297.

List of Subjects in 21 CFR Part 1310

Drug Traffic Control, Reporting and Recordkeeping Requirements.

For reasons set out above, it is proposed that 21 CFR Part 1310 be amended as follows:

PART 1310—[AMENDED]

1. The authority citation for part 1310 continues to read as follows:

Authority: 21 U.S.C. 802, 830, 871(b).

2. Section 1310.02 is proposed to be amended by adding a new paragraph (a)(25) through (27) to read as follows:

§ 1310.02 Substances covered.

* * * * *

(a) * * *

(25) Red phosphorus—6795

(26) White phosphorus (Other names: Yellow Phosphorus)—6796

(27) Hypophosphorous acid and its salts (Including ammonium hypophosphite, calcium hypophosphite, iron hypophosphite, potassium hypophosphite, manganese hypophosphite, magnesium hypophosphite and sodium hypophosphite)—6797

3. Section 1310.04 is proposed to be amended by adding new paragraphs (g)(1)(ii) to (g)(1)(iv) to read as follows:

§ 1310.04 Maintenance of Records.

* * * * *

(g) * * *

(1) * * *

(ii) Red phosphorus

(iii) White phosphorus (Other names: Yellow Phosphorus)

(iv) Hypophosphorous acid and its salts

* * * * *

Dated: August 30, 2000.

Julio F. Mercado,

Deputy Administrator.

[FR Doc. 00–24553 Filed 9–22–00; 8:45 am]

BILLING CODE 4410–09–P

DEPARTMENT OF THE INTERIOR

Office of Surface Mining Reclamation and Enforcement

30 CFR Part 926

[SPATS No. MT–021–FOR]

Montana Abandoned Mine Land Reclamation Plan

AGENCY: Office of Surface Mining Reclamation and Enforcement, Interior.

ACTION: Proposed rule; public comment period and opportunity for public hearing on proposed amendment.

SUMMARY: The Office of Surface Mining Reclamation and Enforcement (OSM) is announcing receipt of a proposed amendment to the Montana abandoned mine land reclamation (AMLR) plan (hereinafter, the ''Montana plan'') under the Surface Mining Control and Reclamation Act of 1977 (SMCRA). Montana proposes revisions to a statute about AMLR reclamation, proposes deletion of the AMLR rules in the Administrative Rules of Montana (ARM), and proposes a plan of reorganization of the AMLR program. Montana intends to revise its AMLR plan to be consistent with SMCRA, meet the requirements of the Federal regulations, and improve operational efficiency.

DATES: We will accept written comments on this amendment until 4 p.m., m.d.t., October 25, 2000. If requested, we will hold a public hearing on the amendment on October 20, 2000. We will accept requests to speak until 4 p.m., m.d.t., October 10, 2000.

ADDRESSES: You should mail, hand deliver, or e-mail written comments and requests to speak at the hearing to Guy Padgett at the address listed below.

You may review copies of the Montana plan, this amendment, a listing of any scheduled public hearings, and all written comments received in response to this document at the addresses listed below during normal business hours, Monday through Friday, excluding holidays. You may receive one free copy of the amendment by contacting OSM's Casper Field Office.

Guy Padgett, Director, Casper Field Office, Office of Surface Mining Reclamation and Enforcement, 100 East ''B'' Street, Federal Building, Room 2128, Casper, Wyoming 82601–1918, Telephone: (307) 261–6550.

Vic Anderson, Chief, Mine Waste Cleanup Bureau, Remediation Division, Montana Department of Environmental Quality, 1520 E. Sixth Ave., P.O. Box 20091, Helena, MT 59620–0901, Telephone: (406) 444–4972.

Steve Welch, Chief, Industrial and Energy Minerals Bureau, Montana Department of Environment Quality, 1520 E. Sixth Ave., P.O. Box 200901, Telena, MT 59620–0901, Telephone: (406) 444–4964.

FOR FURTHER INFORMATION CONTACT: Guy Padgett, Telephone: (307) 261–6550, Internet address: gpadgett@osmre.gov.

SUPPLEMENTARY INFORMATION:

I. Background on the Montana Plan.
II. Description of the Proposed Amendment.
III. Public Comment Procedures.
IV. Procedural Determinations.

I. Background on the Montana Plan

On November 24, 1980, the Secretary of the Interior conditionally approved the Montana plan as administered by the Department of State Lands. You can find general background information on the Montana plan, including the Secretary's findings, the disposition of comments, and the conditions of approval of the Montana plan in the October 24, 1980, **Federal Register** (45 FR 70445). You can also find later actions concerning Montana's plan and plan amendments at 30 CFR 926.21 and 926.25.

II. Description of the Proposed Amendment

By letter dated August 15, 2000, Montana sent us a proposed amendment to its plan (SPATS No. MT–021–FOR, Administrative Record No. MT–18–01) under SMCRA (30 U.S.C. 1201 *et seq.*). Montana sent the amendment in response to the required plan amendment at 30 CFR 926.21(a) and at its own initiative. The full text of the plan amendment is available for you to read at the locations listed above under **ADDRESSES**.

Montana proposes to delete its AMLR rule definitions of ''abandoned mine land reclamation fund,'' ''emergency,'' and ''extreme danger'' at ARM 26.4.301 and its definitions of ''abandoned mine land reclamation fund,'' ''emergency,'' ''expended,'' ''extreme danger,'' ''fund,'' ''left or abandoned in either an unreclaimed or inadequately reclaimed condition,'' ''Montana abandoned mine reclamation program,'' and ''reclamation activities'' at ARM 26.4.1231.

Montana proposes to delete the AMLR rules at ARM 26.41232 through 26.41242, which concern the AMLR fund, eligible lands and water, reclamation objectives and priorities, reclamation project evaluation, consent to enter lands, land eligible for acquisition, procedures for acquisition, acceptance of gifts of land, management of acquired lands, disposition of reclaimed lands, and reclamation on private land.

In lieu of the deleted rules, Montana intends to rely on the requirements of its AMLR plan and on the statutory provisions at Montana Code Annotated (MCA) 82–4–239, 82–4–371, and 82–4–445. Montana proposes to revise MCA 82–4–239 to reflect the reorganized duties of the Board of Environmental Review and Department of Environmental Quality. Montana has changed the wording to delete ''Board'' and insert ''Department'' as approporiate. These proposed revisions are the same as those proposed by Montana on May 16, 1995 (SPATS No. MT–017–FOR, Administrative Record No. MT–14–01). At that time, OSM found no problems with the revisions to MCA 82–4–239 but deferred a decision on it due to a lack of information concerning the 1995 Montana reorganization and its impact on the AMLR plan. (For more information, see final rule **Federal Register** notice, 64 FR 3604, dated January 22, 1999.)

Lastly, in this amendment, Montana presents its 1995 reorganization moving the AMLR program from the Department of State Lands to the Department of Environmental Quality.

III. Public Comment Procedures

Under the provisions of 30 CFR 884.15(a), OSM requests your comments on whether the amendment satisfies the applicable State reclamation plan approval criteria of 30 CFR 884.14. If we approve the amendment, it will become part of the Montana plan.

Written Comments

Send your written comments to OSM at the address given above. Your written comments should be specific, pertain only to the issues proposed in this rulemaking, and include explanations in support of your recommendations. In the final rulemaking, we will not consider or include in the Administrative Record any comments received after the time indicated under **DATES** or at locations other than the Casper Field Office.

Electronic Comments

Please submit Internet comments as an ASCII or WordPerfect file avoiding the use of special characters and any form of encryption. Please also include ''Attn: SPATS No. MT–021–FOR'' and your name and return address in your Internet message. If you do not receive a confirmation that we have received your Internet message, contact the Casper Field Office at (307) 261–6550.

Availability of Comments

We will make comments, including names and addresses of respondents, available for public review during normal business hours. We will not consider anonymous comments. If individual respondents request confidentiality, we will honor their request to the extent allowable by law.

Individual respondents who wish to withhold their name or address from public review, except for the city or town, must state this prominently at the beginning of their comments. We will make all submissions from organizations or businesses, and from individuals identifying themselves as representatives or officials of organizations or businesses, available for public review in their entirety.

Public Hearing

If you wish to speak at the public hearing, contact the person listed under **FOR FURTHER INFORMATION CONTACT** by 4 p.m., m.d.t., October 10, 2000. If you are disabled and need special accommodations to attend a public hearing, please contact the person listed under **FOR FURTHER INFORMATION CONTACT**. We will arrange the location and time of the hearing with those persons requesting the hearing. If no one requests an opportunity to speak, we will not hold the hearing.

To assist the transcriber and ensure an accurate record, we request, if possible, that each person who speaks at a public hearing provide us with a written copy of his or her comments. The public hearing will continue on the specified date until everyone scheduled to speak has been heard. If you are in the audience and have not been scheduled to speak and wish to do so, you will be allowed to speak after those who have been scheduled. We will end the hearing after everyone scheduled to speak and others present in the audience who wish to speak, have been heard.

Public Meeting

If only one person requests an opportunity to speak, we may hold a public meeting rather than a public hearing. If you wish to meet with us to discuss the amendment, please request a meeting by contacting the person listed under **FOR FURTHER INFORMATION CONTACT**. All such meetings will be open to the public and, if possible, we will post notices of meetings at the locations listed under **ADDRESSES**. We will make a written summary of each meeting a part of the Administrative Record.

IV. Procedural Determination

Executive Order 12630—Takings

This rule does not have takings implications. This determination is based on the analysis performed for the counterpart Federal regulations.

Executive Order 12866—Regulatory Planning and Review

This rule is exempted from review by the Office of Management and Budget (OMB) under Executive Order 12866.

Executive Order 12988—Civil Justice Reform

The Department of the Interior has conducted the reviews required by section 3 of Executive Order 12988 and has determined that, to the extent allowable by law, this rule meets the applicable standards of subsections (a) and (b) of that section. However, these standards are not applicable to the actual language of Montana AMLR plans and revisions thereof since each such plan is drafted and promulgated by Montana, not by OSM. Decisions on proposed Montana AMLR plans and revisions thereof submitted by a Montana AMLR are based on a determination of whether the submittal meets the requirements of Title IV of SMCRA (30 U.S.C. 1231–1243) and the applicable Federal regulations at 30 CFR Parts 884 and 888.

Executive Order 13132—Federalism

This rule does not have Federalism implications within the meaning of Executive Order 13132. SMCRA delineates the roles of the Federal and State governments with regard to the regulation of surface coal mining and reclamation operations. One of the purposes of SMCRA is to ''establish a nationwide program to protect society and the environment from the adverse effects of surface coal mining operations.'' Section 405 of SMCRA authorized the creation of State AMLR programs for the purpose of reclaiming and restoring land and water resources adversely affected by past coal mining operations. Section 405(d) of SMCRA specifies the criteria for the approval and disapproval of these State abandoned mine reclamation programs which are funded at 100 percent by grants from the Federal government.

National Environmental Policy Act

No environmental impact statement is required for this rule since agency decisions on proposed Montana AMLR plans and revisions thereof are categorically excluded from compliance with the National Environmental Policy Act (42 U.S.C. 4332) by the Manual of the Department of the Interior (516 DM 6, appendix 8, paragraph 8.4B(29)).

Paperwork Reduction Act

This rule does not contain information collection requirements that require approval by OMB under the Paperwork Reduction Act (44 U.S.C. 3507 *et seq.*).

Regulatory Flexibility Act

The Department of the Interior has determined that this rule will not have a significant economic impact on a substantial number of small entities under the Regulatory Flexibility Act (5 U.S.C. 601 *et seq.*). The Montana submittal which is the subject of this rule is based upon counterpart Federal regulations for which an economic analysis was prepared and certification made that such regulations would not have a significant economic effect upon a substantial number of small entities. Accordingly, this rule will ensure that existing requirements established by SMCRA or previously promulgated by OSM will be implemented by Montana. In making the determination as to whether this rule would have a significant economic impact, the Department relied upon the data and assumptions in the analyses for the corresponding Federal regulations.

Small Business Regulatory Enforcement Fairness Act

This rule is not a major rule under 5 U.S.C. 804(2), the Small Business Regulatory Enforcement Fairness Act. This rule (a) does not have an annual effect on the economy of $100 million; (b) will not cause a major increase in costs or prices for consumers, individual industries, geographic regions, or Federal, State or local governmental agencies; and (c) does not have significant adverse effects on competition, employment, investment, productivity, innovation, or the ability of U.S.-based enterprises to compete with foreign-based enterprises. This determination is based upon the fact that the Montana submittal which is the subject of this rule is based upon counterpart Federal regulations for which an analysis was prepared and a determination made that the Federal

regulation was not considered a major rule.

Unfunded Mandates

This rule will not impose a cost of $100 million or more in any given year on any governmental entity or the private sector.

List of Subjects in 30 CFR Part 926

Abandoned mine reclamation programs, Intergovernmental relations, Surface mining, Underground mining.

Dated: September 18, 2000.

Brent Wahlquist,

Regional Director, Western Regional Coordinating Center.

[FR Doc. 00–24581 Filed 9–22–00; 8:45 am]

BILLING CODE 4310–05–M

DEPARTMENT OF THE INTERIOR

Office of Surface Mining Reclamation and Enforcement

30 CFR Part 926

[SPATS No. MT–020–FOR]

Montana Regulatory Program

AGENCY: Office of Surface Mining Reclamation and Enforcement, Interior.

ACTION: Proposed rule; public comment period and opportunity for public hearing on proposed amendment.

SUMMARY: The Office of Surface Mining Reclamation and Enforcement (OSM) is announcing receipt of a proposed amendment to the Montana regulatory program (hereinafter, the ''Montana program'') under the Surface Mining Control and Reclamation Act of 1977 (SMCRA). Montana proposed revisions to, and additions of statutes about, the definition of what constitutes a mine operator, the notice requirements for alternate reclamation plans; the use of introduced species on lands mined, disturbed, or redisturbed after May 2, 1978, and reseeded prior to January 1, 1984; a new statute section concerning subsidence; and other editorial revisions. Montana intends to revise its program to be consistent with SMCRA, provide additional safeguard, clarify ambiguities, and improve operational efficiency.

DATES: We will accept written comments on this amendment until 4 p.m., m.d.t. October 25, 2000. If requested, we will hold a public hearing on the amendment on October 20, 2000. We will accept requests to speak until 4 p.m., m.d.t. on October 10, 2000.

ADDRESSES: You should mail, hand deliver, or e-mail written comments and requests to speak at the hearing to Guy Padgett at the address listed below.

You may review copies of the Montana program, this amendment, a listing of any scheduled public hearings, and all written comments received in response to this document at the addresses listed below during normal business hours, Monday through Friday, excluding holidays. You may receive one free copy of the amendment by contacting OSM's Casper Field Office.

Guy Padgett, Director, Casper Field Office, Office of Surface Mining Reclamation and Enforcement, 100 East ''B'' Street, Federal Building, Room 2128, Casper, Wyoming 82601–1918, Telephone: (307) 261–6550.

Steve Welch, Chief, Industrial and Energy Minerals Bureau, Montana Department of Environmental Quality, 1520 E. Sixth Ave., P.O. Box 200901, Helena, MT 59620–0901, Telephone: (406) 444–4964.

FOR FURTHER INFORMATION CONTACT: Guy Padgett, Telephone: (307) 261–6550. Internet: gpadgett@osmre.gov.

SUPPLEMENTARY INFORMATION:

I. Background on the Montana Program.
II. Description of the Proposed Amendment.
III. Public Comment Procedures.
IV. Procedural Determinations.

I. Background on the Montana Program

On April 1, 1980, the Secretary of the Interior conditionally approved the Montana program. You can find background information on the Montana program, including the Secretary's findings, the disposition of comments, and conditions of approval of the Montana program in the April 1, 1980, **Federal Register** (45 FR 21560). You can also find later actions concerning Montana's program and program amendments at 30 CFR 926.15, 926.16, and 926.30.

II. Description of the Proposed Amendment

By letters dated July 20 and August 17, 2000, Montana sent us a proposed amendment to its program (Administrative Record No. MT–17–01) under SMCRA (30 U.S.C. 1201 *et seq.*). Montana sent the amendment in response to a June 5, 1996, letter (Administrative Record No. MT–17–03) that we sent to Montana in accordance with 30 CFR 732.17(c), and to include the changes made at its own initiative by the 1997 State legislature. In addition, Montana has included revisions from the 1995 State legislature which OSM approved in the January 22, 1999, **Federal Register** (64 FR 3604). The full text of this program amendment is available for you to read at the locations listed above under **ADDRESSES**.

The provisions of the Montana Code Annotated (MCA) that Montana proposes to revise or add are: 82–4–203(21), MCA (Definitions); 82–4–232(7), MCA (Area mining required-bond-alternative plan); 82–4–233, MCA (Planting of vegetation following grading of disturbed area); 82–4–243, MCA (Subsidence); 82–4–253(2), MCA (Suit for damage to water supply); and 82–4–254(4), MCA (Violation-Penalty-Waiver).

Specifically, Montana proposes to revise the Montana program to (1) include uranium mining using in situ methods in the definition of operator; (2) require newspaper publication of alternate reclamation plans; (3) allow introduced species to compose a major or dominant component of the reclaimed vegetation for lands mined, disturbed, or redisturbed after May 2, 1978, and seeded prior to January 1, 1984; (4) allow for the prompt repair or compensation for material damage to any occupied residential dwelling and related structures and to any noncommercial building resulting from subsidence caused by underground mining operations; (5) promptly replace any drinking, domestic, or residential water supply from a well or spring that was in existence prior to the permit application that has been affected by contamination, diminution, or interruption resulting from underground coal mining operations; (6) include an editorial revision to MCA 82–4–253(2); and (7) propose a revision at MCA 82–4–254(4) to reflect the 1995 State reorganization to designate a director of environmental quality.

III. Public Comment Procedures

Under the provisions of 30 CFR 732.17(h), OSM requests your comments on whether the amendment satisfies the applicable program approval criteria of 30 CFR 732.15. If we approve the amendment, it will become part of the Montana program.

Written Comments

Send your written comments to OSM at the address given above. Your written comments should be specific, pertain only to the issues proposed in this rulemaking, and include explanations in support of your recommendations. In the final rulemaking, we will not necessarily consider or include in the Administrative Record any comments received after the time indicated under ''**DATES**'' or at locations other than the Casper Field Office.

Electronic Comments

Please submit Internet comments as an ASCII file avoiding the use of special

characters and any form of encryption. Please also include ''Attn: SPATS No. MT–020–FOR'' and your name and return address in your Internet meassage. If you do not receive a confirmation that we have received your Internet message, contact the Casper Field Office at (307) 261–6550.

Availability of Comments

We will make comments, including names and addresses of respondents, available for public review during normal business hours. We will not consider anonymous comments. If individual respondents request confidentiality, we will honor their request to the extent allowable by law. Individual respondents who wish to withhold their name or address from public review, except for the city or town, must state this prominently at the beginning of their comments. We will make all submissions from organizations or businesses, and from individuals identifying themselves as representatives or officials of organizations or businesses, available for public review in their entirety.

Public Hearing

If you wish to speak at the public hearing, contact the person listed under **FOR FURTHER INFORMATION CONTACT** by 4 p.m., m.d.t. on October 10, 2000. If you are disabled and need special accommodations to attend a public hearing, contact the person listed under **FOR FURTHER INFORMATION CONTACT**. We will arrange the location and time of the hearing with those persons requesting the hearing. If no one requests an opportunity to speak, we will not hold the hearing.

To assist the transcriber and ensure an accurate record, we request, if possible, that each person who speaks at a public hearing provide us with a written copy of his or her comments. The public hearing will continue on the specified date until everyone schedule to speak has been heard. If you are in the audience and have not been scheduled to speak and wish to do so, you will be allowed to speak after those who have been scheduled. We will end the hearing after everyone schedule to speak and others present in the audience who wish to speak, have been heard.

Public Meeting

If only one person requests an opportunity to speak, we may hold a public meeting rather than a public hearing. If you wish to meet with us to discuss the amendment, please request a meeting by contacting the person listed under **FOR FURTHER INFORMATION CONTACT**. All such meetings are open to the public and, if possible, we will post notices of meetings at the locations listed under **ADDRESSES**. We will make a written summary of each meeting a part of the Administrative Record.

IV. Procedural Determinations

Executive Order 12630—Takings

This rule does not have takings implications. This determination is based on the analysis performed for the counterpart Federal regulations.

Executive Order 12866—Regulatory Planning and Review

This rule is exempted from review by the Office of Management and Budget (OMB) and Executive Order 12866.

Executive Order 12988—Civil Justice Reform

The Department of the Interior has conducted the reviews required by section 3 of Executive order 12988 and had determined that, to the extent allowable by law, this rule meets the applicable standards of subsections (a) and (b) of that section. However, these standards are not applicable to the actual language of State regulatory programs and program amendments since each such program is drafted and promulgated by a specific State, not by OSM. Under sections 503 and 505 of SMCRA (30 U.S.C. 1253 and 1255) and the Federal regulations at 30 CFR 730.11, 732.15, and 732.17(h)(10), decisions on proposed State regulatory programs and program amendments submitted by the States must be based solely on a determination of whether the submittal is consistent with SMCRA and its implementing Federal regulations and whether the other requirements of 30 CFR Parts 730, 731, and 732 have been met.

Executive Order 13132—Federalism

This rule does not have Federalism implications within the meaning of Executive Order 13132. SMCRA delineates the roles of the Federal and State governments with regard to the regulation of surface coal mining and reclamation operations. One of the purposes of SMCRA is to ''establish a nationwide program to protect society and the environment from the adverse effects of surface coal mining operations.'' Section 503(a)(1) of SMCRA requires that State laws regulating surface coal mining and reclamation operations be ''in accordance with'' the requirements of SMCRA. Section 503(a)(7) requires that State programs contain rules and regulations ''consistent with'' regulations issued by the Secretary pursuant to SMCRA.

National Environmental Policy Act

Section 702(d) of SMCRA (30 U.S.C. 1292(d)) provides that a decision on a proposed State regulatory program provision does not constitute a major Federal action within the meaning of section 102(2)(C) of the National Environmental Policy Act (42 U.S.C. 4332(2)(C)). A determination has been made that such decisions are categorically excluded from the NEPA process (516 DM 8.4.A).

Paperwork Reduction Act

This rule does not contain information collection requirements that require approval by OMB under the Paperwork Reduction Act (44 U.S.C. 3507 *et seq.*).

Regulatory Flexibility Act

The Department of the Interior has determined that this rule will not have a significant economic impact on a substantial number of small entities under the Regulatory Flexibility Act (4 U.S.C. 601 *et seq.*). The State submittal that is the subject of this rule is based upon counterpart Federal regulations for which an economic analysis was prepared and certification made that such regulations would not have a significant economic effect upon a substantial number of small entities. Accordingly, this rule will ensure that existing requirements established by SMCRA or previously promulgated by OSM will be implemented by the State. In making the determination as to whether this rule would have a significant economic impact, the Department relied upon the data and assumptions for the counterpart Federal regulations.

Small Business Regulatory Enforcement Fairness Act

This rule is not a major rule under 5 U.S.C. 804(2), the Small Business Regulatory Enforcement Fairness Act. This rule (a) does not have an annual effect on the economy of $100 million; (b) will not cause a major increase in costs or prices for consumers, individual industries, geographic regions, or Federal, State or local governmental agencies; and (c) does not have significant adverse effects on competition, employment, investment, productivity, innovation, or the ability of U.S. based enterprises to compete with foreign-based enterprises. This determination is based upon the fact that the State submittal which is the subject of this rule is based upon counterpart Federal regulations for which an analysis was prepared and a determination made that the Federal

regulation was not considered a major rule.

Unfunded Mandates

This rule will not impose a cost of $100 million or more in any given year on any governmental entity or the private sector.

List of Subjects in 30 CFR Part 926

Intergovernmental relations, Surface mining, Underground mining.

Dated: September 19, 2000.

Brent Wahlquist,

Regional Director, Western Regional Coordinating Center.

[FR Doc. 00–24580 Filed 9–22–00; 8:45 am]

BILLING CODE 4310–05–M

ENVIRONMENTAL PROTECTION AGENCY

40 CFR Part 152 and 156

[OPP–250129; FRL–6747–1]

RIN 2070–AC46

Ground Water Pesticide Management Rule; Notification to the Secretary of Agriculture

AGENCY: Environmental Protection Agency (EPA).

ACTION: Notification to the Secretary of Agriculture.

SUMMARY: This document notifies the public that the Administrator of EPA has forwarded to the Secretary of Agriculture a draft final rule under section 25(a) of the Federal Insecticide, Fungicide, and Rodenticide Act (FIFRA). The draft final rule establishes a program whereby States and Tribes will develop and implement plans to manage the use of pesticides determined to leach to ground water. The rule also identifies four pesticides of concern to be managed under this program initially. The four pesticides can continue to be used if States and Tribes develop plans which will ensure they do not leach to ground water at concentrations that may be harmful to human health and the environment.

The rule designates the four chemicals as Restricted Use pesticides under section 3(d)(1)(C) of the Federal Insecticide, Fungicide, and Rodenticide Act (FIFRA). The restriction prohibits all outdoor use of the pesticides unless used in accordance with a Pesticide Management Plan (PMP) developed by States and Tribes and approved by EPA. If a State or Tribe fails to submit or obtain approval of its PMP by a date 36 months from the effective date of the Rule, users in that State or Tribal land are prohibited from using the pesticide.

FOR FURTHER INFORMATION CONTACT: By mail: Arthur Jean B. Williams, Field and External Affairs Division (7506C), Office of Pesticide Programs, Environmental Protection Agency, 1200 Pennsylvania Ave., NW., Washington, DC 20460; telephone number: (703) 305–5239; e-mail address: williams.arty@epa.gov.

SUPPLEMENTARY INFORMATION:

I. General Information

A. Does this Action Apply to Me?

You may be potentially affected by this action if you are involved in the production, sale, use, or regulation of one or more of the four chemicals or formulations specified in this regulation. Potentially affected categories and entities may include, but are not limited to:

Categories	NAICS codes	Examples of potentially affected entities
Producers	32532	Pesticide Registrants; Pesticide Formulators
Distributors	444	Farm Supplies Retail, Lawn and Garden Supply Stores, Farm Supplies Wholesale
Regulators	921 92115	State Legislative and Executive Bodies Tribal Governments
Users	111 56171 71391 81411	Crop Production (Growers) Lawn Pesticide Applicators Golf Course Applicators Homeowners

This listing is not intended to be exhaustive, but rather provides a guide for readers regarding entities likely to be affected by this action. Other types of entities not listed in the table could also be affected. The North American Industrial Classification System (NAICS) codes have been provided to assist you and others in determining whether or not this action might apply to certain entities. If you have questions regarding the applicability of this action to a particular entity, consult the person listed under **FOR FURTHER INFORMATION CONTACT**.

B. How Can I Get Additional Information, Including Copies of this Document and Other Related Documents?

1. *Electronically*. You may obtain electronic copies of this document, and certain other related documents that might be available electronically, from the EPA Internet Home Page at http://www.epa.gov/. To access this document, on the Home Page select ''Laws and Regulations, '' ''Regulations and Proposed Rules,'' and then look up the entry for this document under the ''**Federal Register** —Environmental Documents.'' You can also go directly to the **Federal Register** listings at http://www.epa.gov/fedrgstr/.

2. *In person*. The Agency has established an official record for this action under docket control number OPP–250129. The official record consists of the documents specifically referenced in this action, and other information related to this action found in docket numbers 0PP–36190 and 36190A, including any information claimed as Confidential Business Information (CBI). This official record includes the documents that are physically located in the docket, as well as the documents that are referenced in those documents. The public version of the official record does not include any information claimed as CBI. The public version of the official record, which

includes printed, paper versions of any electronic comments submitted during an applicable comment period is available for inspection in the Public Information and Records Integrity Branch (PIRIB), Rm. 119, Crystal Mall #2, 1921 Jefferson Davis Hwy., Arlington, VA, from 8:30 a.m. to 4 p.m., Monday through Friday, excluding legal holidays. The PIRIB telephone number is (703) 305–5805.

II. What Action is EPA Taking?

Section 25(a)(2) of FIFRA provides that the Administrator must provide the Secretary of Agriculture with a copy of any regulation at least 30 days before signing it for publication in the **Federal Register**. The draft final rule is not available to the public until after it has been signed by EPA. If the Secretary comments in writing regarding the draft final rule within 15 days after receiving it, the Administrator shall include in the final rule when published in the **Federal Register** the comments of the Secretary and the Administrator's response to those comments. If the Secretary does not comment in writing within 15 days after receiving the draft final rule, the Administrator may sign the final rule for publication in the **Federal Register** anytime after the 15–day period.

III. Do Any Regulatory Assessment Requirements Apply to this Notification?

No. This document is not a rule, merely a notification of submission to the Secretary of Agriculture. As such, none of the regulatory assessment requirements apply to this document.

IV. Will EPA Submit this Notification to Congress and the Comptroller General?

No. This action is not a rule for purposes of the Congressional Review Act (CRA), 5 U.S.C. 804(3), and will not be submitted to Congress and the Comptroller General. EPA will submit the final rule to Congress and the Comptroller General as required by the CRA.

List of Subjects in Parts 152 and 156

Environmental protection, Administrative Practice and Procedure, Environmental Protection Agency, Labeling, Occupational Safety and Health, Pesticides and Pests, Reporting and Recordkeeping Requirements

Dated: September 13, 2000

Joseph Merenda,

Acting Director, Office of Pesticide Programs.

[FR Doc. 00–24209 Filed 9–22–00; 8:45 am]

BILLING CODE 6560–50–S

DEPARTMENT OF THE INTERIOR

Fish and Wildlife Service

50 CFR Part 20

RIN 1018–AH67

Migratory Bird Hunting; Temporary Approval of Tin Shot as Nontoxic for Hunting Waterfowl and Coots During the 2000–01 Season

AGENCY: Fish and Wildlife Service, Interior.

ACTION: Proposed rule.

SUMMARY: The U.S. Fish and Wildlife Service (Service or we) proposes to grant temporary approval of tin shot as nontoxic for hunting waterfowl and coots during the 2000–2001 season. Acute toxicity studies reveal no adverse effects over a 30-day period on mallards (*Anas platyrhynchos*) dosed with tin shot. Reproductive/chronic toxicity testing over a 150-day period indicated that tin administered to adult mallards did not adversely affect them or the offspring they produced. Tin shot is produced by the International Tin Research Institute, Ltd. (ITRI) of Uxbridge, Middlesex, England.

DATES: Comments on the proposed rule must be received no later than November 24, 2000.

ADDRESSES: Comments may be sent to the Chief, Division of Migratory Bird Management (DMBM), U.S. Fish and Wildlife Service, 1849 C Street, NW., ms 634–ARLSQ, Washington, DC 20240. The public may inspect comments during normal business hours in Room 634, Arlington Square Building, 4401 N. Fairfax Drive, Arlington, Virginia.

FOR FURTHER INFORMATION CONTACT: Jon Andrew, Chief, Division of Migratory Bird Management, (703) 358–1714.

SUPPLEMENTARY INFORMATION: The Migratory Bird Treaty Act of 1918 (Act) (16 U.S.C. 703–712 and 16 U.S.C. 742a–j) implements migratory bird treaties between the United States and Great Britain for Canada (1916 and 1996 as amended), Mexico (1936 and 1972 as amended), Japan (1972 and 1974 as amended), and Russia (then the Soviet Union, 1978). These treaties protect certain migratory birds from take, except as permitted under the Act. The Act authorizes the Secretary of the Interior to regulate take of migratory birds in the United States. Under this authority, the Fish and Wildlife Service controls the hunting of migratory game birds through regulations in 50 CFR part 20.

The purpose of this proposed rule is to allow the hunting public to use tin shot for hunting migratory birds. Accordingly, we are proposing to amend 50 CFR 20.21, which describes illegal hunting methods for migratory birds. Paragraph (j) of § 20.21 pertains to prohibited types of shot. We are proposing to amend § 20.21(j) to allow the use of tin shot (99.9 percent tin with <1 percent residual lead) as nontoxic shot for waterfowl and coot hunting for the 2000–01 hunting season only.

Since the mid-1970s, we have sought to identify shot that does not pose a significant toxic hazard to migratory birds or other wildlife. Currently, only steel, bismuth-tin, tungsten-iron, and tungsten-polymer shot are approved as nontoxic. On September 5, 2000 (65 FR 53936) we published a final rule that grants permanent approval to tungsten-matrix shot. We previously granted temporary approval for tin shot during the 1999–2000 hunting season (August 19, 1999; 64 FR 45400). Compliance with the use of nontoxic shot has increased over the last few years (Anderson *et al.* 2000). We believe that compliance will continue to increase with the approval and availability of other nontoxic shot types.

ITRI's candidate shot is made from commercially pure tin; no alloying or other alterations are intentionally made to the chemical composition of the shot. This shot material has a density of approximately 7.29 g/cm^3, and is 99.9 percent tin, with a low level of iron pickup due to the steel production equipment. The tin shot application from ITRI contains a description of the shot, a toxicological report (Thomas 1997), results of a 30-day toxicity study (Wildlife International, Ltd. 1998), and results of a 150-day reproductive/chronic toxicity study (Gallagher *et al.* 2000). The toxicological report incorporates known toxicity information (a synopsis of acute and chronic toxicity data for mammals and birds, potential for environmental concern, and toxicity to aquatic and terrestrial invertebrates, amphibians and reptiles) and information on environmental fate and transport (shot alteration, environmental half-life, and environmental concentration). On August 19, 1999 (64 FR 45400) we published a detailed literature review on toxicity, environmental fate, and known effect of tin on birds, as well as results from ITRI's 30-day toxicity testing of tin shot.

ITRI's chronic toxicity/reproductive study revealed no adverse effects when mallards were dosed with eight No. 4 size tin shot and monitored over a 150-day period (Gallagher et al. 2000). At initiation of the test (day 0), and on days 31, 60, and 90, 21 male and 22 female adult mallards were orally dosed with eight No. 4 tin shot. On the same days,

22 male and 22 female adult mallards were dosed with eight No. 4 steel shot (negative control group). An additional 4 male and 4 female mallards were dosed with a single No. 4 lead shot (positive control group). Two lead-dosed birds (1 female, 1 male) died from lead toxicosis on day 10 and 17, respectively, during the study; whereas no mortalities occurred in the other test groups. Biochemical results from blood samples collected during tests revealed no biologically meaningful treatment-related differences between the tin group and the steel shot control group. Low, but measurable levels of tin were found in the testes of males from the steel shot group and in the livers and femurs of both males and females from the tin group. Additionally, low, but measurable, levels of tin were found in the liver and gonads of offspring from the steel group and in gonads of offspring from the tin group. For all treatment groups, mean levels of tin were below the limit of detection in egg yolks and whites. Liver and kidney tissues collected for examination revealed no treatment-related abnormalities.

No significant differences occurred in egg production, fertility, or hatchability of eggs from birds dosed with tin when compared to steel-dosed ducks. No differences occurred in survival or body weight of ducklings from ducks dosed with tin when compared to ducklings from steel-dosed ducks. Blood measurements of ducklings from tin-dosed ducks were similar to measurements from ducklings from steel-dosed ducks. Overall, results of the 150-day study indicated that tin shot repeatedly administered to adult mallards did not adversely affect them, or the offspring they produced.

Nontoxic Shot Approval

The nontoxic shot approval process contains a tiered review system and outlines three conditions for approval of shot types. The first condition for nontoxic shot approval is toxicity testing. Based on the results of the toxicological report and the toxicity tests discussed above, we conclude that tin shot does not pose a significant danger to migratory birds or other wildlife.

The second condition for approval is testing for residual lead levels. Any shot with lead levels equal to or exceeding 1 percent will be considered toxic and, therefore, illegal. We have determined that the maximum environmentally acceptable level of lead in any nontoxic shot is trace amounts of <1 percent, and incorporated this requirement in the new approval process. ITRI has documented that tin shot meets this requirement.

The third condition for approval involves law enforcement. In the August 18, 1995, **Federal Register** (60 FR 43314), we indicated our position that a noninvasive field detection device to distinguish lead from other shot types was an important component of the nontoxic shot approval process. At that time, we stated that final approval of bismuth-tin shot would be contingent upon the development and availability of a noninvasive field detection device (60 FR 43315). We incorporated a requirement for a noninvasive field detection device in the revised nontoxic shot approval process published on December 1, 1997 (62 FR 63608); 50 CFR 20.134(b)(6). A field detection method to distinguish tin shot from lead currently is being developed by ITRI. Granting temporary approval for tin shot during the 2000–01 hunting season will facilitate completion of development of such a device. However, we will not consider either additional temporary approvals, or final approval, of tin shot beyond the 2000–01 season until a reliable and acceptable field detection method is developed and is readily available to law enforcement personnel.

As stated previously, this proposed rule would amend 50 CFR 20.21(j) by temporarily approving tin shot as nontoxic for hunting waterfowl and coots during the 2000–2001 hunting season only. It is based on the toxicological report, acute toxicity study, and the reproductive/chronic toxicity study submitted by ITRI. Results of these studies indicate the absence of any deleterious effects of tin shot when ingested by captive-reared mallards. The comment period for the proposed rule has been shortened to 30 days. This time frame will make it possible for tin shot, if temporarily approved, to be available for use by hunters during the 2000–01 hunting season. This will increase the number of nontoxic shot options available to hunters.

References

Anderson, W.L., S.P. Havera, and B.W. Zercher. 2000. Ingestion of lead and nontoxic shotgun pellets by ducks in the Mississippi Flyway. J. Wildl. Manage. 64:848–857.

Gallagher, S.P., J.B. Beavers, R. Van Hoven, M. Jaber. 2000. Pure tin shot: A chronic exposure study with the mallard including reproductive parameters. Wildlife International, Ltd. Project No. 476–102. Easton, Maryland. 322pp.

Thomas, V.G. 1997. Application for approval of tin shot as non-toxic for the hunting of migratory birds. 26 pp.

Wildlife International, Ltd. 1998. Tin shot: An oral toxicity study with the mallard. Project No. 476–101. 158 pp.

NEPA Consideration

In compliance with the requirements of section 102(2)(C) of the National Environmental Policy Act of 1969 (42 U.S.C. 4332(C)), and the Council on Environmental Quality's regulation for implementing NEPA (40 CFR 1500–1508), we prepared a draft Environmental Assessment (EA) for temporary approval of tin shot in August, 2000. The EA is available to the public at the location indicated under the **ADDRESSES** caption.

Endangered Species Act Considerations

Section 7 of the Endangered Species Act (ESA) of 1972, as amended (16 U.S.C. 1531 *et seq.*), provides that Federal agencies shall ''insure that any action authorized, funded or carried out * * * is not likely to jeopardize the continued existence of any endangered species or threatened species or result in the destruction or adverse modification of (critical) habitat * * *'' We are completing a Section 7 consultation under the ESA for this proposed rule. The result of our consultation under Section 7 of the ESA will be available to the public at the location indicated under the **ADDRESSES** caption.

Regulatory Flexibility Act

The Regulatory Flexibility Act of 1980 (5 U.S.C. 601 *et seq.*) requires the preparation of flexibility analyses for rules that will have a significant effect on a substantial number of small entities, which includes small businesses, organizations, or governmental jurisdictions. This rule proposes to approve an additional type of nontoxic shot that may be sold and used to hunt migratory birds; this rule would provide one shot type in addition to the existing four that are approved. We have determined, however, that this rule will have no effect on small entities since the approved shot merely will supplement nontoxic shot already in commerce and available throughout the retail and wholesale distribution systems. We anticipate no dislocation or other local effects, with regard to hunters and others.

Executive Order 12866

This proposed rule is not a significant regulatory action subject to Office of Management and Budget (OMB) review under Executive Order 12866. OMB makes the final determination under E.O. 12866.

We invite comments on how to make this proposed rule easier to understand,

including answers to questions such as the following: (1) Are the requirements in the proposed rule clearly stated? (2) Does the proposed rule contain technical language or jargon that interferes with its clarity? (3) Does the format of the proposed rule (grouping and order of sections, use of headings, paragraphing, etc.) aid or reduce its clarity? (4) Would the proposed rule be easier to understand if it were divided into more (but shorter) sections? (5) Is the description of the proposed rule in the **SUPPLEMENTARY INFORMATION** section of the preamble helpful in understanding the proposed rule? What else could we do to make the proposed rule easier to understand? Send a copy of any comments that concern how we could make this proposed rule easier to understand to: Office of Regulatory Affairs, Department of the Interior, Room 7229, 1849 C Street, NW, Washington, DC 20240. You may also e-mail the comments to this address: exsec@ios.doi.gov

Paperwork Reduction Act

An agency may not conduct or sponsor, and a person is not required to respond to, a collection of information unless it displays a currently valid OMB control number. We have examined this regulation under the Paperwork Reduction Act of 1995 (44 U.S.C. 3501) and found it to contain no information collection requirements. However, we do have OMB approval (1018–0067; expires 08/30/2000; renewal submitted) for information collection relating to what manufacturers of shot are required to provide to us for the nontoxic shot approval process. For further information, see 50 CFR 20.134.

Unfunded Mandates Reform

We have determined and certify pursuant to the Unfunded Mandates Reform Act, 2 U.S.C. 1502, *et seq.*, that this proposed rulemaking will not impose a cost of $100 million or more in any given year on local or State government or private entities.

Civil Justice Reform—Executive Order 12988

We, in promulgating this proposed rule, have determined that these regulations meet the applicable standards provided in Sections 3(a) and 3(b)(2) of Executive Order 12988.

Takings Implication Assessment

In accordance with Executive Order 12630, this proposed rule, authorized by the Migratory Bird Treaty Act, does not have significant takings implications and does not affect any constitutionally protected property rights. This proposed rule will not result in the physical occupancy of property, the physical invasion of property, or the regulatory taking of any property. In fact, this proposed rule allow hunters to exercise privileges that would be otherwise unavailable; and, therefore, reduces restrictions on the use of private and public property.

Federalism Effects

Due to the migratory nature of certain species of birds, the Federal Government has been given responsibility over these species by the Migratory Bird Treaty Act. These rules do not have a substantial direct effect on fiscal capacity, change the roles or responsibilities of Federal or State governments, or intrude on State policy or administration. Therefore, in accordance with Executive Order 13132, these regulations do not have significant federalism effects and do not have sufficient federalism implications to warrant the preparation of a Federalism Assessment.

Government-to-Government Relationship With Tribes

In accordance with the President's memorandum of April 29, 1994, ''Government-to-Government Relations with Native American tribal Governments'' (59 FR 22951) and 512 DM 2, we have evaluated possible effects on Federally recognized Indian tribes and have determined that there are no effects.

List of Subjects in 50 CFR Part 20

Exports, Hunting, Imports, Reporting and recordkeeping requirements, Transportation, Wildlife.

Accordingly, we propose to amend part 20, subchapter B, chapter 1 of Title 50 of the Code of Federal Regulations as follows:

PART 20—[AMENDED]

1. The authority citation for part 20 continues to read as follows:

Authority: 16 U.S.C. 703–712 and 16 U.S.C. 742 a–j.

2. Section 20.21 is amended by revising paragraph (j) to read as follows:

§ 20.21 What hunting methods are illegal?

* * * * *

(j) While possessing shot (either in shotshells or as loose shot for muzzleloading) other than steel shot, or bismuth-tin (97 parts bismuth: 3 parts tin with <1 percent residual lead) shot, or tungsten-iron (55 parts tungsten: 45 parts iron with <1 percent residual lead) shot, or tungsten-polymer (95.5 parts tungsten: 4.5 parts Nylon 6 or 11 with <1 percent residual lead) shot, or tungsten-matrix (95.9 parts tungsten: 4.1 parts polymer with <1 percent residual lead) shot, or tin (99.9 percent tin with <1 percent residual lead) shot, or such shot approved as nontoxic by the Director pursuant to procedures set forth in § 20.134, provided that this restriction applies only to the taking of Anatidae (ducks, geese, [including brant] and swans), coots (*Fulica americana*) and any species that make up aggregate bag limits during concurrent seasons with the former in areas described in § 20.108 as nontoxic shot zones, and further provided that:

(1) Tin shot (99.9 percent tin with <1 percent residual lead) is legal as nontoxic shot for waterfowl and coot hunting for the 2000–2001 hunting season only.

(2) [Reserved]

Dated: September 13, 2000

Stephen C. Saunders,

Acting Assistant Secretary for Fish and Wildlife and Parks.

[FR Doc. 00–24543 Filed 9–22–00; 8:45 am]

BILLING CODE 4310–55–P

Notices

Federal Register

Vol. 65, No. 186

Monday, September 25, 2000

This section of the FEDERAL REGISTER contains documents other than rules or proposed rules that are applicable to the public. Notices of hearings and investigations, committee meetings, agency decisions and rulings, delegations of authority, filing of petitions and applications and agency statements of organization and functions are examples of documents appearing in this section.

DEPARTMENT OF AGRICULTURE

Submission for OMB Review; Comment Request

September 19, 2000.

The Department of Agriculture has submitted the following information collection requirement(s) to OMB for review and clearance under the Paperwork Reduction Act of 1995, Public Law 104–13. Comments regarding (a) whether the collection of information is necessary for the proper performance of the functions of the agency, including whether the information will have practical utility; (b) the accuracy of the agency's estimate of burden including the validity of the methodology and assumptions used; (c) ways to enhance the quality, utility and clarity of the information to be collected; (d) ways to minimize the burden of the collection of information on those who are to respond, including through the use of appropriate automated, electronic, mechanical, or other technological collection techniques or other forms of information technology should be addressed to: Desk Officer for Agriculture, Office of Information and Regulatory Affairs, Office of Management and Budget (OMB), Washington, DC 20503 *and* to Departmental Clearance Office, USDA, OCIO, Mail Stop 7602, Washington, DC 20250–7602. Comments regarding these information collections are best assured of having their full effect if received within 30 days of this notification. Copies of the submission(s) may be obtained by calling (202) 720–6746.

An agency may not conduct or sponsor a collection of information unless the collection of information displays a currently valid OMB control number and the agency informs potential persons who are to respond to the collection of information that such persons are not required to respond to the collection of information unless it displays a currently valid OMB control number.

Rural Utilities Service

Title: RUS Form 444, ''Wholesale Power Contracts.''

OMB Control Number: 0572–0089.

Summary of Collection: The Rural Electrification Act of 1936 (RE Act) as amended (7 U.S.C. 901 *et seq.*, authorizes the Rural Utilities Service (RUS) to make and guarantee loans that will enable rural consumers to obtain electric power. Rural consumers formed non-profit electric distribution cooperatives. Subsequently, groups of these distribution cooperatives banded together to form Generation and Transmission cooperatives (G&T's) that generate or purchase power and transmit the power to the distribution systems. All RUS and G&T borrowers will enter into a Wholesale Power Contract with their distribution members by using RUS Form 444.

Need and Use of the Information: RUS will collect information to improve the credit quality and credit worthiness of loans and loan guarantees to G&T borrowers to fulfill the purposes of the RE Act.

Description of Respondents: Not-for-profit institutions; Business or other for-profit.

Number of Respondents: 110.

Frequency of Responses: Reporting: Quarterly.

Total Burden Hours: 660.

Forest Service

Title: Recreation Fee Permit and Envelope Registration Card.

OMB Control Number: 0596–0019.

Summary of Collection: The Organic Administration Act (30 stat. 11), the Wilderness Act (78 stat. 890), the Wild and Scenic River Act (82 stat. 906) and Executive Order 11664, all authorize the Forest Service (FS) to manage the forests to benefit both land and people. Every year million of people visit the National Forest System. As FS heads into the next millennium, their challenge is to meet a soaring demand for higher quality recreation experiences while safeguarding the health of the land. FS will care for the land and serve people is to determine where people are going when they visit the national forest and give them information, which provides for a safe and enjoyable visit and at the same time protects the resource. The Visitors Permit and Visitor Registration Card are tools that will help FS meet their objective. At the majority of locations visited, a permit for use is required. The FS uses the Visitor's Permit (Form 2300–30) and the Visitor Registration Card (Form 2300–32) to permit use in these areas.

Need and Use of the Information: FS will collect the visitor's name, address, area to be visited, date of visit, length of stay, method of travel, number of people, and number of pack and saddle stock. The permit and registration card allows managers to identify areas, which are being heavily used and is also used to locate forest visitors if they do not return from their trip as planned. If the information were not collected from visitors it could cause overuse and site deterioration in some environmentally sensitive areas.

Description of Respondents: Individuals or households; Business or other for-profit; Not-for profit institutions.

Number of Respondents: 320,000.

Frequency of Responses: Reporting: Other (per visit).

Total Burden Hours: 26,000.

Agricultural Marketing Service

Title: Cranberries grown in the states of MA, RI, CT, NJ, WI, MN, MI, OR, WA, and Long Island in the State of NY, Marketing Order No. 929.

OMB Control Number: 0581–0103.

Summary of Collection: Marketing Order No. 929 (7 CFR Part 929) regulates the handling of cranberries grown in certain states and emanates from enabling legislation (the Agricultural Marketing Agreement Act of 1937, Secs. 1–19, 48 Stat. 31, as amended; 7 U.S.C. 601–674). The Act was designed to permit regulation of certain agricultural commodities for the purpose of providing orderly marketing conditions in interstate commerce and improving returns to growers. The objective of the marketing agreement and order is to correlate the supply of cranberries available for sale in the various trade channels with the demand in those outlets.

Need and Use of the Information: The Cranberry Marketing Committee locally administers the order and represents growers. The committee and its staff are responsible for keeping information on individual handlers inventories and receipt confidential. Information gathered by the committee would only be reported in the aggregate, along with

other pertinent cranberry data. AMS will collect information using various forms that ensure compliance and help monitor grower's allotments. If information were not collected, it would eliminate data needed to keep the cranberry industry and the Secretary abreast of changes at the State and local level.

Description of Respondents: Business or other for profit; Farms.

Number of Respondents: 1,285.

Frequency of Responses: Recordkeeping; Reporting: Quarterly and Annually.

Total Burden Hours: 1,750.

Farm Service Agency

Title: Regulations for Cooperative Marketing Associations, 7 CFR Part 1425.

OMB Control Number: 0560–0040.

Summary of Collection: The Secretary of Agriculture and Commodity Credit Corporation (CCC) have authority to make Price Support available to Cooperatives on behalf of their members through both commodity statutes and the Commodity Credit Corporation Charter Act. Various forms are used to collect information along with the cooperative eligibility requirements that form the basis for information collections. These requirements are needed to insure price support programs' integrity. Cooperative Marketing Association (CMA) is an entity through which benefits of commodity loan and loan deficiency payment (LDP) programs flow to eligible producers. The responsibilities of the CCC are to stabilize, support and protect farm income and prices to aid in the orderly marketing of farm commodities. Commodities authorized for price support through approved Cooperative Marketing Associations (CMA's) include barley, corn, cotton, crambe, oats, oilseeds, rice, sorghum and wheat.

Need and Use of the Information: The information requested is needed to administer the CCC's Cooperative Marketing Association Program. CCC approves CMA's participation in the commodity loan and LDP program, and monitors them based on eligibility requirements. This is to ensure that commodity loan and LDP proceeds go only to eligible producers. The consequence of not obtaining this information could lead to ineligible producers sharing the benefits of commodity loans and LDP's with eligible producers. In this environment, pseudo and bogus cooperatives could take advantage of program benefits such as interim financing, marketing gains, and forfeiture provisions.

Description of Respondents: Individuals or households; Farms; Business or other for profit.

Number of Respondents: 380.

Frequency of Responses: Recordkeeping; Reporting: On Occasion, Annually; Other (as requested).

Total Burden Hours: 25,946.

Forest Service

Title: Application for Prospecting Permit.

OMB Control Number: 0596–0089.

Summary of Collection: The Application for Prospecting Permit, Form FS–2800–14, was developed by Region 1, Forest Service (FS) to obtain better information from applicants requesting permits to conduct geophysical activities on National Forest System lands. These activities are authorized according to 36 CFR Subpart E 228.100 and 228.101 for operations on a lease, 36 CFR 251 Subpart B for operations off a lease, and 36 CFR 251.15 for operations on reserved mineral rights. Geophysical operations are conducted to better understand the earth's geology and mineral resources. Use of the form will ensure that a complete, concise, site-specific, description of all proposed geophysical activity be obtained. It will ensure timely and effective review and decision-making in compliance with the National Environmental Policy Act (NEPA; 42 U.S.C. 4521–4347).

Need and Use of the Information: FS collects the name, address, and company project name of the applicant and similar information about the geophysical contractor. The information is used by FS to ensure a thorough, accurate, and timely review of the proposed geophysical activity. If complete and accurate information is not collected the environmental analysis and related NEPA documents may be incomplete; permit issuance may be delayed; and, recordkeeping may be incomplete.

Description of Respondents: Business or other for-profit; Non-for-profit institutions.

Number of Respondents: 25.

Frequency of Responses: Reporting: On occasion.

Total Burden Hours: 6.

Food and Nutrition Service

Title: 7 CFR Part 220 School Breakfast Program.

OMB Control Number: 0584–0012.

Summary of Collection: Section 4 of the Child Nutrition Act (CNA) of 1966, as amended, authorizes the School Breakfast Program (SBP). The Food and Nutrition Service (FNS) administers the School Breakfast Program on behalf of the Secretary of Agriculture so that needy children may receive their breakfasts free or at a reduced price. The requirements for the interim rule entitled, Identification of Blended Beef, Pork, Poultry or Seafood Products are found in section 210.10(h) of the National School Lunch Program regulations. The third party disclosure requires school food authorities to inform children and their parents of the use of products or dishes containing more than 30 parts fully hydrated vegetable protein products to less than 70 parts beef, pork, poultry or seafood in food served under the SBP.

Need and Use of the Information: School food authorities provide information to State agencies. The State agencies reprot to FNS. FNS uses the information submitted to determine the amount of funds to be reimbursed, evaluate and adjust program operations, and to develop projections for future program operations.

Description of Respondents: State, Local, or Tribal Government, Individuals or household, Business or other for-profit, Not-for-profit institutions, Federal Government.

Number of Respondents: 82,748.

Frequency of Responses: Recordkeeping; Reporting: On occasion; Quarterly; Monthly; Semi-annually; Annually; Other.

Total Burden Hours: 4,895,796.

Food and Nutrition Service

Title: National School Lunch Program.

OMB Control Number: 0584–0006.

Summary of Collection: Section 9 of the National School Lunch Act (NSLA) gives the Secretary authority to prescribe the minimum nutritional requirements for lunches served by school participating in the school lunch program. The requirements for the interim rule entitled, Identification of Blended Beef, Pork, Poultry or Seafood Products are found in section 210.10 (h) of the National School Lunch Program regulations. The third party disclosure requires school food authorities to inform children and their parents of the use of products or dishes containing more than 30 parts fully hydrated vegetable protein products to less than 70 parts beef, pork, poultry or seafood in food served under the NSLP. The Food and Nutrition Service will collect information using forms FNS–66, 640, and 67.

Need and Use of the Information: The information will be collected to ensure that the alternative implemented by the States and the school food authorities adequately meets program requirements and goals. The plan will also ensure a

comprehensive review and will be available for monitoring purposes.

Description of Respondents: State, Local, or Tribal Government, Individuals or household, Business or other for-profit, Not-for-profit institutions, Federal Govenrment.

Number of Respondents: 118,051.

Frequency of Responses: Recordkeeping; Reporting: On occasion; Quarterly; Monthly; Annually; Semi-annually; Other.

Total Burden Hours: 9,462,622.

Animal and Plant Health Inspection Service

Title: National Agricultural Pest Information System.

OMB Control Number: 0579–0010.

Summary of Collection: The United States Department of Agriculture is responsible for preventing plant diseases or insect pests from entering the United States, preventing the spread of pests not widely distributed in the United States, and eradicating those imported pests when eradication is feasible. The Plant Quarantine Act and the Federal Plant Pest Act authorizes the Department to carry out this mission. The Animal and Plant Health Inspection Service (APHIS) has joined forces with the States to create a program called the Cooperative Agricultural Pest Survey. The program allows the States and the Plant Protection and Quarantine (PPQ) Division to conduct surveys to detect and measure the presence of imported plant pests and to input survey data into a national computer-based system (called the National Agricultural Plant Information System). APHIS will collect information using PPQ Form 391 and a survey.

Need and Use of the Information: APHIS will collect information to predict potential pest situations, to promptly detect and respond to the occurrence of new pests, and to record the location of those pest incursions that could directly hinder the export of U.S. farm commodities. If the information were not collected, it would seriously affect APHIS ability to timely assist farmers, State personnel, and others involved in agriculture to plan pest control measures, detect new outbreaks, and to determine the threat posed by migratory pests.

Description of Respondents: Government.

Number of Respondents: 150.

Frequency of Responses: Reporting; On occasion.

Total Burden Hours: 1,445.

Economic Research Service

Title: Study of Program Access and Declining Food Stamp Participation.

OMB Control Number: 0536–NEW.

Summary of Collection: The Economic Research Service (ERS) of the Department of Agriculture (USDA) has the responsibility to provide social and economic intelligence on consumer, food marketing, and rural issues, including: Domestic food assistance programs; low-income assistance programs; food security status of the poor; food consumption determinants and trends; consumer demand for food quality, safety, and nutrition; food market competition and coordination; and food safety regulations. The Food Stamp Program (FSP) is the cornerstone of the Nation's nutrition safety net for low-income Americans. The program's intent is to eliminate hunger and enable eligible low-income persons to obtain a more nutritionally adequate diet by providing food stamp coupons (or other forms of payment) redeemable at many retail food stores. USDA is concerned about the declines in Food Stamp Program participation that have occurred since 1994, and whether or not the program is reaching all those in need. In an effort to better understand the factors affecting Food Stamp Program participants, the ERS will launch a study. The evaluation is being performed pursuant to Public Law 95–73, which authorizes USDA to undertake research.

Need and Use of the Information: ERS will collect information to describe the policies and practices in local food stamp offices, particularly those instituted since welfare reform, that may affect accessibility to the FSP; to examine how local policies and practices affect households' decisions to apply for food stamps and their decisions to continue to receive food stamps; and to examine the reason eligible households do not participate in the FSP.

Description of Respondents: State, Local, or Tribal Government.

Number of Respondents: 37,278.

Frequency of Responses: Reporting: Other (one time).

Total Burden Hours: 5,110.5.

Farm Service Agency

Title: Certified Mediation Program.

OMB Control Number: 0560–0165.

Summary of Collection: The Farm Service Agency (FSA) is amending its Agricultural Loan Mediation (AMP) regulations to implement the requirements of the Federal Crop Insurance Reform and Department of Agriculture Reorganization Act of 1994 (the 1994 Act). P.L. 103–354, October 13, 1994, amended Section 501 of the Agricultural Credit Act of 1987 (7 U.S.C. 5101 by striking ''an agricultural loan mediation program'' and inserting ''a mediation program''. The regulation provides a mechanism to States to apply for and obtain matching funds grants from USDA. The grant funds help states supplement administrative operating funds needed to administer their agricultural mediation programs. FSA will collect information by mail, phone, fax, and in person.

Need and Use of the Information: FSA will collect information to ensure matching grant funds are used only to pay for eligible costs necessary for the operation and administration of the State mediation programs, consistent with the statutory purposes of the program. If information were not collected, this would result in improper administration and appropriation of Federal grant funds.

Description of Respondents: State, Local or Tribal Government.

Number of Respondents: 25.

Frequency of Responses: Recordkeeping; Reporting: Annually.

Total Burden Hours: 775.

Nancy B. Sternberg,

Departmental Clearance Officer.

[FR Doc. 00–24563 Filed 9–22–00; 8:45 am]

BILLING CODE 3410–01–M

DEPARTMENT OF AGRICULTURE

Forest Service

Notice of Change to Title of Position Authorized to Sign Conveyance Documents for the Eastern Region

AGENCY: Forest Service, USDA.

ACTION: Notice.

SUMMARY: The former title of Lands and Minerals Program Leader, Eastern Region, has been changed to Director, Lands and Minerals, Eastern Region (Region 9). The Regional Forester approved this action on September 15, 2000. This notice serves to advise the public that under the new title of Director, Lands and Minerals, the incumbent has authorization to sign legal documents on behalf of the United States. This signing authority applies to all conveyance documents; that is, deeds and other legal instruments as specified in the Forest Service Manual (FSM) 5400.

FOR FURTHER INFORMATION CONTACT: Questions about this notice should be addressed to Carolyn Williams, Regional Realty Specialist, Forest Service, USDA, 310 West Wisconsin Avenue, Milwaukee, WI 53203; phone 414–297–3696.

Dated: September 15, 2000.

Paul M. Stockinger,

Director, Lands and Minerals, Eastern Region.

[FR Doc. 00–24507 Filed 9–22–00; 8:45 am]

BILLING CODE 3410–11–M

DEPARTMENT OF AGRICULTURE

Natural Resources Conservation Service

Santa Cruz Watershed, Rio Arriba County, New Mexico

AGENCY: Natural Resources Conservation Service, USDA.

ACTION: Notice of a Finding of No Significant Impact.

SUMMARY: Pursuant to Section 102(2)(c) of the National Environmental Policy Act of 1969; the Council on Environmental Quality Regulations (40 CFR Part 1500); and the Natural Resources Conservation Service Rules (7 CFR Part 650); the Natural Resources Conservation Service, U.S. Department of Agriculture, gives notice that an environmental impact statement is not being prepared for the rehabilitation of Floodwater Retarding Structure 3A in the Santa Cruz River Watershed.

FOR FURTHER INFORMATION CONTACT: Rosendo Trevino III; State Conservationist; Natural Resources Conservation Service; 6200 Jefferson, NE; Albuquerque, NM 87109–3734; telephone 505–761–4400.

SUPPLEMENTARY INFORMATION: The environmental assessment of this federally assisted action indicates that the project will not cause significant local, regional, or national effects on the human environment. As a result of these findings, Rosendo Trevino III, State Conservationist, has determined that the preparation and review of an environmental impact statement are not needed for this project. The project purpose is flood prevention. The action includes the rehabilitation of one floodwater retarding dam. The Notice of a Finding of No Significant Impact (FNSI) has been forwarded to the Environmental Protection Agency; various Federal, state, and local agencies; and interested parties. A limited number of copies of the FNSI are available to fill single copy requests at the above address. Basic data developed during the environmental assessment is on file and may be reviewed by contacting Rosendo Trevino III.

No administrative action on implementation of the proposed action will be taken until 30 days after the date of this publication in the **Federal Register**.

Rosendo Trevino III,

State Conservationist.

[FR Doc. 00–24508 Filed 9–22–00; 8:45 am]

BILLING CODE 3410–16–M

DEPARTMENT OF AGRICULTURE

Natural Resources Conservation Service

Notice of Proposed Changes to Section IV of the Field Office Technical Guide (FOTG) of the Natural Resources Conservation Service in Indiana

AGENCY: Natural Resources Conservation Service (NRCS), USDA.

ACTION: Notice of availability of proposed changes in Section IV of the FOTG of the NRCS in Indiana for review and comment.

SUMMARY: It is the intention of NRCS in Indiana to issue a revised conservation practice standard in Section IV of the FOTG. The revised standard is Pumping Plant for Water Control (Code 533). This practice may be used in conservation systems that treat highly erodible land.

DATES: Comments will be received on October 25, 2000.

ADDRESSES: Address all requests and comments to Jane E. Hardisty, State Conservationist, Natural Resources Conservation Service (NRCS), 6013 Lakeside Blvd., Indianapolis, Indiana 46278. Copies of this standard will be made available upon written request. You may submit electronic requests and comments to joe.gasperi@in.usda.gov.

FOR FURTHER INFORMATION CONTACT: Jane E. Hardisty, 317–290–3200.

SUPPLEMENTARY INFORMATION: Section 343 of the Federal Agriculture Improvement and Reform Act of 1996 states that revisions made after enactment of the law, to NRCS state technical guides used to carry out highly erodible land and wetland provisions of the law, shall be made available for public review and comment. For the next 30 days, the NRCS in Indiana will receive comments relative to the proposed changes. Following that period, a determination will be made by the NRCS in Indiana regarding disposition of those comments and a final determination of changes will be made.

Dated: September 8, 2000.

Dwayne Howard,

ASTC (Programs), Indianapolis, Indiana.

[FR Doc. 00–24524 Filed 9–22–00; 8:45 am]

BILLING CODE 3410–16–M

DEPARTMENT OF COMMERCE

National Oceanic and Atmospheric Administration

[I.D. 091200B]

North Pacific Fishery Management Council; Public Meetings; Correction

AGENCY: National Marine Fisheries Service (NMFS), National Oceanic and Atmospheric Administration (NOAA), Commerce.

ACTION: Notice of public meetings; correction.

SUMMARY: The North Pacific Fishery Management Council (Council) and its advisory committees will hold public meetings. This document corrects notice document published in the **Federal Register** on September 18, 2000.

DATES: The meetings will be held on Monday October 2, 2000, through Tuesday October 9, 2000.

ADDRESSES: All meetings will be held at the Centennial Building, 330 Harbor Drive, Sitka, AK, unless otherwise posted at the Centennial Building and on the Council's website: www.fakr.noaa.gov/npfmc.

Council address: North Pacific Fishery Management Council, 605 W. 4th Ave., Suite 306, Anchorage, AK 99501-2252.

FOR FURTHER INFORMATION CONTACT: Council staff, telephone: 907-271-2809.

SUPPLEMENTARY INFORMATION:

Need for Correction

This notice was previously published in the **Federal Register** on Monday, September 18, 2000 (65 FR 56295). The previous notice contained numerous errors and agenda items were inadvertently omitted. This notice is being re-published in its entirety.

The Council's Advisory Panel will begin at 8 a.m., Monday, October 2, and continue through Thursday, October 5. The Scientific Committee will begin on Tuesday, October 3, and continue through Wednesday, October 4.

The Council will begin their plenary session at 8 a.m. on Wednesday, October 4, continuing through Monday, October 9. All meetings are open to the public except Executive Sessions which may be held during the week to discuss litigation and/or personnel matters.

Council: The agenda for the Council's plenary session will include the following issues. The Council may take appropriate action on any of the issues identified.

1. Reports:

(a) Executive Director's Report.

(b) State Fisheries Report by Alaska Dept. of Fish and Game.

(c) NMFS Management Report.

(d) Enforcement and Surveillance reports by NMFS and the Coast Guard.

2. Pacific cod/Steller sea lion interactions: Progress report on analysis.

3. American Fisheries Act:

(a) Update on the Environmental Impact Statement and rulemaking.

(b) Final action on groundfish processing sideboards and Bering Sea/Aleutian Islands (BSAI) pollock processing excessive share caps.

(c) Report from industry on Pacific cod sideboard issues.

(d) Consider emergency rule for implementation in 2001.

(e) Review industry proposals relating to co-op contracts and leasing rules and take action as appropriate.

4. Halibut subsistence regulations: final action on alternatives.

5. Halibut Charter Individual Fishing Quota (IFQ) Program:

(a) Preliminary review of draft analysis and progress report.

(b) Discussion of Gulf of Alaska Coastal Community Coalitions proposals with regard to halibut IFQs for communities.

6. Community Development Quota (CDQ) Program:

(a) Initial review of an amendment package to conform State of Alaska and Federal regulations.

(b) Review State of Alaska recommendations for CDQ allocations for 2001.

7. Groundfish Management:

(a) Recommend interim and preliminary harvest specifications for 2001 BSAI and Gulf of Alaska (GOA) groundfish fisheries.

(b) Initial review of an amendment to allocate BSAI Pacific cod among pot gear sectors.

(c) Progress report on rationalization of the GOA groundfish fisheries.

8. Crab Management:

(a) Review of Stock Assessment and Fishery Evaluation reports for BSAI king and Tanner crab.

(b) Progress report on crab co-op development and buyback program.

9. Staff Tasking: Review progress on current staff tasking and provide direction to staff.

Although other issues not contained in this agenda may come before this Council for discussion, in accordance with the Magnuson-Stevens Fishery Conservation and Management Act, those issues may not be the subject of formal Council action during this meeting. Council action will be restricted to those issues specifically identified in the agenda listed in this notice.

Advisory Meetings

Advisory Panel: The agenda for the Advisory Panel will mirror that of the Council listed above, with the exception of the reports under Item 1.

Scientific and Statistical Committee: The Scientific and Statistical Committee will address the following items on the Council agenda:

1. Steller sea lion/Pacific cod interactions.

2. Halibut Charter IFQ Program.

3. CDQ Program

4. All issues under Groundfish Management.

5. All issues under Crab Management.

Other Committee/Workgroup & Industry Meetings

During the meeting week, the following groups will hold meetings to discuss various agenda issues of interest:

Halibut Charter IFQ Committee:

Will meet 1-5 p.m. on Monday, October 2, 2000.

Socio-economic Data Committee:

Will meet 6-7 p.m. on Tuesday, October 3, 2000.

Other committees and workgroups may hold impromptu meetings throughout the meeting week. Such meetings will be announced during regularly-scheduled meetings of the Council, Advisory Panel, and SSC, and will be posted at the hotel.

Special Accommodations

These meetings are physically accessible to people with disabilities. Requests for sign language interpretation or other auxiliary aids should be directed to Helen Allen at 907-271-2809 at least 7 working days prior to the meeting date.

Dated: September 20, 2000.

Richard W. Surdi,

Acting Director, Office of Sustainable Fisheries, National Marine Fisheries Service.

[FR Doc. 00–24587 Filed 9–22–00; 8:45 am]

BILLING CODE 3510-22-S

DEPARTMENT OF COMMERCE

National Oceanic and Atmospheric Administration

[I.D. 091900C]

Pacific Fishery Management Council; Public Meeting

AGENCY: National Marine Fisheries Service (NMFS), National Oceanic and Atmospheric Administration (NOAA), Commerce.

ACTION: Notice of public meetings.

SUMMARY: The Pacific Fishery Management Council's (Council) Coastal Pelagic Species Management Team (CPSMT) and Coastal Pelagic Species Advisory Subpanel (CPSAS) will hold public meetings.

DATES: The CPSMT will meet Tuesday, October 17, 2000 from 10 a.m. to 5 p.m. and Wednesday, October 18, 2000, from 8 a.m. until 12 p.m. The CPSAS will meet Wednesday, October 18, 2000 at 1 p.m. and may go into the evening until business for the day is completed.

ADDRESSES: Both the CPSMT and CPSAS meetings will be held at NMFS Southwest Region Office, 501 West Ocean Blvd, Suite 4200, Long Beach, CA.

Council address: Pacific Fishery Management Council, 2130 SW Fifth Avenue, Suite 224, Portland, OR 97201.

FOR FURTHER INFORMATION CONTACT: Mr. Dan Waldeck, Pacific Fishery Management Council; (503) 326-6352.

SUPPLEMENTARY INFORMATION: There are several items scheduled for the CPSMT agenda, these include: Pacific sardine stock assessment and harvest guideline; capacity goal and other issues related to the limited entry fishery; and several issues related to the sardine fishery, e.g., seasonal distribution of the Pacific sardine stock along the West Coast, sub-allocation options proposed by the Oregon Department of Fish and Wildlife, and the effects of delaying the start of the sardine fishery. The primary purpose of the CPSAS meeting is to review documents and analyses developed by the CPSMT and to discuss other pertinent business.

Although non-emergency issues not contained in the meeting agenda may come before the CPSMT and/or the CPSAS for discussion, those issues may not be the subject of formal CPSMT or CPSAS action during this meetings. CPSMT and/or CPSAS action will be restricted to those issues specifically listed in this notice and any issues arising after publication of this notice that require emergency action under section 305(c) of the Magnuson-Stevens Fishery Conservation and Management Act, provided the public has been notified of the CPSMT's and/or CPSAS's intent to take final action to address the emergency.

Special Accommodations

These meetings are physically accessible to people with disabilities. Requests for sign language interpretation or other auxiliary aids should be directed to Ms. Carolyn Porter at (503) 326-6352 at least 5 days prior to the meeting date.

Dated: September 20, 2000.

Richard W. Surdi,

Acting Director, Office of Sustainable Fisheries, National Marine Fisheries Service.

[FR Doc. 00–24586 Filed 9–22–00; 8:45am]

BILLING CODE 3510-22-S

DEPARTMENT OF DEFENSE

Office of the Secretary

Proposed Collection; Comment Request

AGENCY: Defense Security Service.

ACTION: Notice.

In compliance with Section 3506(c)(2)(A) of the Paperwork Reduction Act of 1995, the Defense Security Service (DSS) announces the proposed continuation of a public information collection affecting cleared DoD contractors and seeks public comments on the provision thereof. Comments are invited on: (a) Whether the proposed collection shall have practical utility; (b) the accuracy of the agency's estimate of the burden of the information to be collected; and (c) ways to enhance the quality, utility and clarity of the information to be collected; and (d) ways to minimize the burden of the information collection on respondents, including through the use of automated collection techniques or other forms of information technology.

DATES: Consideration will be given to all comments received by November 24, 2000.

ADDRESSES: Written comments and recommendations on the proposed information collection should be sent to Defense Security Service, Chief Operations Division, ATTN: Mr. Richard L. Lawhorn, 1340 Braddock Place, Alexandria, VA 22314–1650.

FOR FURTHER INFORMATION CONTACT: To request more information on this proposed data collection or obtain a copy of the proposal and associated collection instrument, please write to the above address, or call Defense Security Service, (703) 325–5327 or (703) 325–6050.

Title, Associated Forms, and OMB Number: ''Department of Defense Security Agreement'', ''Appendage to Department of Defense Security Agreement'', ''Certificate Pertaining to Foreign Interests'' (DD Forms, 441, 441–1 and Standard Form (SF) 328) respectively; OMB No. 0704–0194.

Needs and Uses: Executive Order (EO) 12829, ''National Industrial Security Program (NISP)'', stipulates that the Secretary of Defense shall serve as the Executive Agent for inspecting and monitoring the contractors, licensees, and grantees who require or will require access, to or who store or will store classified information; and for determining the eligibility for access to classified information of contractors, licensees, and grantees and their respective employees. EO 12829 also authorizes the Executive Agent to issue, after consultation with affected agencies, standard forms that will promote the implementation of the NISP. The specific requirements necessary to protect classified information released to private industry are set forth in DoD 5200.22M, ''National Industrial Security Program Operating Manual (NISPOM); they must execute DD Form 441, ''Department of Defense Security Agreement'', which is the initial contract between industry and the government. This legally binding document details the responsibility of both parties and obligates the contractor to fulfill the requirements outlined in DoD 5220.22M. The DD Form 441–1, Appendage to Department of Defense Security Agreement,'' is used to extend the agreements to branch offices of the contractor. SF Form 328, ''Certificate Pertaining to Foreign Interests,'' must be submitted to provide certification regarding elements of Foreign Ownership, Control or Influence (FOCI) as stipulated in paragraph 2–302b of the NISPOM.

Affected Public: Business, University, Institution or other profit and non-profit organizations.

Annual Burden Hours: 533.33–4,480

Number of Respondents: 3,200

Responses Per Respondent: 1–2

Average Burden Per Respondent: DD Form 441: 14 minutes; DD Form 441–1: 10 minutes; SF 328: 70 minutes (1 hr & 10 min); DD Form 441 and SF 328: 84 min (1 hr & 24 min).

Frequency: One time and/or on occasion (*e.g.* initial facility clearance processing, when the respondent changes: name, organizational structure, moves; or upon request, etc.)

SUPPLEMENTARY INFORMATION:

Summary of Information Collection

The execution of the DD Form 441, 441–1 and SF 328 is a factor in making a determination as to whether a contractor is eligible to have a facility security clearance and/or participate in the National Industrial Security Program (NISP). It is also a legal basis for imposing NISP security requirements on eligible contractors. These requirements are necessary in order to preserve and maintain the security of the United States through establishing standards to prevent the improper disclosure of classified information. DoD estimates the annual usage of the DD Form 441, 441–1 and SF 328 to be 3,200. In addition, the Department of Energy estimates the usage of the SF 328 to be 500 per year. NRC estimated that usage of the SF 328 is zero at this time. The form is authorized for local reproduction and will be available electronically on the World Wide Web. The forms will display OMB approval number 0704–0194.

Patricia L. Toppings,

Alternate OSD Federal Register Liaison Officer, Department of Defense.

[FR Doc. 00–24493 Filed 9–22–00; 8:45 am]

BILLING CODE 5001–10–M

DEPARTMENT OF DEFENSE

Office of the Secretary

Proposed Collection; Comment Request

AGENCY: Defense Security Service.

ACTION: Notice.

In compliance with Section 3506(c)(2)(A) of the Paperwork Reduction Act of 1995, the Defense Security Service announces the proposed continuation of a public information collection affecting cleared Department of Defense contractors and seeks public comments on the provision thereof. Comments are invited on: (a) Whether the proposed collection of information is necessary for the proper performance of the functions of the agency, including whether the information shall have practical utility; (b) the accuracy of the agency's estimate of the burden of the proposed information collection, (c) ways to enhance the quality, utility, and clarity of the information to be collected; and (d) ways to minimize the burden of the information collection on respondents, including through the use of automated collection techniques or other forms of information technology.

DATES: Consideration will be given to all comments received by November 24, 2000.

ADDRESSES: Written comments and recommendations on the proposed information collection should be sent to: Defense Industrial Security Clearance Office (DISCO), ATTN: Mr. James O'Heron, Deputy Director, P.O. Box 2499, Columbus, OH 43216–5006.

FOR FURTHER INFORMATION CONTACT: To request more information on this proposed information collection or to obtain a copy of the proposal and

associated collection instrument, please write to the above address, or call DISCO at (614) 692–2133/34.

Title, Associated Form, and OMB Number: Personal Security Clearance Change Notification; DISCO Form 562; 0704–[To Be Determined].

Type of Request: New Collection.

Needs and Uses: DISCO Form 562 is used by contractors participating in the National Industrial Security Program to report various changes in employee personnel clearance status or identification information, *e.g.,* reinstatements, conversions, terminations, changes in name or other previously submitted information.

Affected Public: Business or Other For-Profit; Not-For-Profit Institutions.

Annual Burden Hours: 45,816.

Number of Respondents: 11,454.

Responses Per Respondent: 20.

Average Burden Per Response: 12 minutes.

Frequency: On Occasion.

SUPPLEMENTARY INFORMATION:

Summary of Information Collection

The execution of the DISCO FORM 562 is a factor in making a determination as to whether a contractor employee is eligible to have a security clearance. These requirements are necessary in order to preserve and maintain the security of the United States through establishing standards to prevent the improper disclosure of classified information.

Dated: September 19, 2000.

Patricia L. Toppings,

Alternate OSD Federal Register, Liaison Officer, Department of Defense.

[FR Doc. 00–24494 Filed 9–22–00; 8:45 am]

BILLING CODE 5001–10–M

DEPARTMENT OF ENERGY

Environmental Management Site-Specific Advisory Board, Rocky Flats

AGENCY: Department of Energy.

ACTION: Notice of open meeting.

SUMMARY: This notice announces a meeting of the Environmental Management Site-Specific Advisory Board (EM SSAB), Rocky Flats. The Federal Advisory Committee Act (Pub. L. 92–463, 86 Stat. 770) requires that public notice of these meetings be announced in the **Federal Register**.

DATES: Thursday, October 5, 2000 6:00 p.m.–9:30 p.m.

ADDRESSES: College Hill Library, Front Range Community College, 3705 West 112th Avenue, Westminster, CO 80021.

FOR FURTHER INFORMATION CONTACT: Ken Korkia, Board/Staff Coordinator, Rocky Flats Citizens Advisory Board, 9035 North Wadsworth Parkway, Suite 2250, Westminster, CO 80021; telephone (303) 420–7855; fax (303) 420–7579.

SUPPLEMENTARY INFORMATION:

Purpose of the Board: The purpose of the Board is to make recommendations to DOE and its regulators in the areas of environmental restoration, waste management, and related activities.

Tentative Agenda:

1. Quarterly Update by the Colorado Department of Public Health and Environment.

2. Discuss Rocky Flats Citizen Advisory Board coordination with Radionuclide Soil Action Levels (RSAL) review process.

3. Final planning for the EM SSAB Stewardship Workshop.

4. Develop comments to Colorado Water Quality Control Commission.

5. Other Board business may be conducted as necessary.

6. Public Comment

Public Participation: The meeting is open to the public. Written statements may be filed with the Board either before or after the meeting. Individuals who wish to make oral statements pertaining to agenda items should contact Ken Korkia at the address or telephone number listed above. Requests must be received at least five days prior to the meeting and reasonable provision will be made to include the presentation in the agenda. The Deputy Designated Federal Officer is empowered to conduct the meeting in a fashion that will facilitate the orderly conduct of business. Each individual wishing to make public comment will be provided a maximum of five minutes to present their comments. This notice is being published less than 15 days before the date of the meeting due to programmatic issues that needed to be resolved.

Minutes: The minutes of this meeting will be available for public review and copying at the Public Reading Room located at the Office of the Rocky Flats Citizens Advisory Board, 9035 North Wadsworth Parkway, Suite 2250, Westminister, CO 80021; telephone (303) 420–7855. Hours of operations for the Public Reading Room are 9:00 a.m to 4:00 p.m., Monday–Friday, except Federal holidays. Minutes will also be made available by writing or calling Deb Thompson at the address or telephone number listed above.

Issued at Washington, DC on September 20, 2000.

Rachel M. Samuel,

Deputy Advisory Committee Management Officer.

[FR Doc. 00–24582 Filed 9–22–00; 8:45 am]

BILLING CODE 6450–01–P

DEPARTMENT OF ENERGY

Federal Regulatory Commission

[Docket No. RP00–542–000]

ANR Pipeline Company; Notice of Proposed Changes in FERC Gas Tariff

September 19, 2000.

Take notice that, on September 12, 2000, ANR Pipeline Company (ANR) tendered for filing as part of its FERC Gas Tariff, Second Revised Volume No. 1, the following revised tariff sheets, to become effective March 27, 2000:

Twelfth Revised Sheet No. 120
Seventh Revised Sheet No. 153
Fifth Revised Sheet No. 159
Third Revised Sheet No. 160A

ANR states that it is making this filing to modify its tariff to conform to Order No. 637's removal of the price ceiling on short term released capacity.

ANR states that copies of the filing have been mailed to all affected customers and state regulatory commissions.

Any person desiring to be heard or to protest said filing should file a motion to intervene or a protest with the Federal Energy Regulatory Commission, 888 First Street, NE., Washington, DC 20426, in accordance with Sections 385.214 or 385.211 of the Commission's Rules and Regulations. All such motions or protests must be filed in accordance with Section 154.210 of the Commission's Regulations. Protests will be considered by the Commission in determining the appropriate action to be taken, but will not serve to make protestants parties to the proceedings. Any person wishing to become a party must file a motion to intervene. Copies of this filing are on file with the Commission and are available for public inspection in the Public Reference Room. This filing may be viewed on the web at http://www.ferc.fed.us/online/rims.htm (call 202–208–2222 for assistance).

David P. Boergers,

Secretary.

[FR Doc. 00–24522 Filed 9–22–00; 8:45 am]

BILLING CODE 6717–01–M

DEPARTMENT OF ENERGY

Federal Energy Regulatory Commission

[Docket No. RP00–544–000]

Carnegie Interstate Pipeline Company; Notice of Tariff Filing

September 19, 2000.

Take notice that on September 15, 2000, Carnegie Interstate Pipeline Company (CIPCO), tendered for filing as part of its FERC Gas Tariff, Original Volume No. 1, the following tariff sheets:

Fifteenth Revised Sheet No. 7
Second Revised Sheet No. 126
Third Revised Sheet No. 127

CIPCO requests that the Commission approve the first tariff sheet identified above effective March 27, 2000, and approve the other two tariff sheets effective October 1, 2000, and requests a waiver of all Commission rules and regulations so as to implement such effective date.

CIPCO states that the filed tariff sheets are being filed to (a) eliminate the maximum rate ceilings for short-term capacity release transactions through September 30, 2002; and (b) to facilitate compliance with Order No. 637 and the revised reporting requirements in Section 161.3(1)(2) of the Commission's Regulations.

Any person desiring to be heard or to protest said filing should file a motion to intervene or a protest with the Federal Energy Regulatory Commission, 888 First Street, N.E., Washington, D.C. 20426, in accordance with Sections 385.214 or 385.211 of the Commission's Rules and Regulations. All such motions or protests must be filed in accordance with Section 154.210 of the Commission's Regulations. Protests will be considered by the Commission in determining the appropriate action to be taken, but will not serve to make protestants parties to the proceedings. Any person wishing to become a party must file a motion to intervene. Copies of this filing are on file with the Commission and are available for public inspection in the Public Reference Room. This filing may be viewed on the web at http://www.ferc.fed.us/online/rims.htm (call 202–208–2222 for assistance).

David P. Boergers,

Secretary.

[FR Doc. 00–24520 Filed 9–22–00; 8:45 am]

BILLING CODE 6717–01–M

DEPARTMENT OF ENERGY

Federal Energy Regulatory Commission

[Docket Nos. ER00–231–002 and EL00–22–002]

The Cincinnati Gas & Electric Company; Notice of Filing

September 19, 2000.

Take notice that on September 13, 2000, The Cincinnati Gas & Electric Company tendered for filing its refund compliance report in the above-captioned dockets.

The compliance report has been served on the public utility commissions of the States of Kentucky, Indiana and Ohio, affected wholesale customers, and all persons on the service list.

Any person desiring to be heard or to protest such filing should file a motion to intervene or protest with the Federal Energy Regulatory Commission, 888 First Street, NE., Washington, DC 20426, in accordance with Rules 211 and 214 of the Commission's Rules of Practice and Procedure (18 CFR 385.211 and 385.214). All such motions and protests should be filed on or before October 4, 2000. Protests will be considered by the Commission to determine the appropriate action to be taken, but will not serve to make protestants parties to the proceedings. Any person wishing to become a party must file a motion to intervene. Copies of this filing are on file with the Commission and are available for public inspection. This filing may also be viewed on the Internet at http://www.ferc.fed.us/online/rims.htm (call 202–208–2222 for assistance).

David P. Boergers,

Secretary.

[FR Doc. 00–24513 Filed 9–22–00; 8:45 am]

BILLING CODE 6717–01–M

DEPARTMENT OF ENERGY

Federal Energy Regulatory Commission

Notice of Filing

September 19, 2000.

In the matter of: ER94–1685–030, ER95–393–028, ER95–892–054, ER96–2652–048, ER99–893–006, ER99–892–007, ER99–891–007, ER99–890–007, ER99–4229–004, ER99–4330–002, ER99–4228–004, ER99–4331–002; Citizens Power Sales LLC, Hartford Power Sales, L.L.C., CL Power Sales One, L.L.C., CL Power Sales Two, L.L.C., CP Power Sales Five, L.L.C., CL Power Sales Six, L.L.C., CL Power Sales Seven, L.L.C., CL Power Sales Eight, L.L.C., CL Power Sales Nine, L.L.C., CL Power Sales Ten, L.L.C., CP Power Sales Twelve, L.L.C., CP Power Sales Thirteen, L.L.C., CP Power Sales Fourteen, L.L.C., CP Power Sales Fifteen, L.L.C., CP Power Sales Seventeen, L.L.C., CP Power Sales Eighteen, L.L.C., CP Power Sales Nineteen, L.L.C., CP Power Sales Twenty, L.L.C.; Notice of Filing

Take notice that on September 12, 2000, Citizens Power Sales LLC, Hartford Power Sales, L.L.C., CL Power Sales One, L.L.C., CL Power Sales Two, L.L.C., CP Power Sales Five, L.L.C., CL Power Sales Six, L.L.C., CL Power Sales Seven, L.L.C., CL Power Sales Eight, L.L.C., CL Power Sales Nine, L.L.C., CL Power Sales Ten, L.L.C., CP Power Sales Twelve, L.L.C., CP Power Sales Thirteen, L.L.C., CP Power Sales Fourteen, L.L.C., CP Power Sales Fifteen, L.L.C., CP Power Sales Seventeen, L.L.C., CP Power Sales Eighteen, L.L.C., CP Power Sales Nineteen, L.L.C., CP Power Sales Twenty, L.L.C. (Citizens Marketing Companies) filed a notice of change in status.

Any person desiring to be heard or to protest such filing should file a motion to intervene or protest with the Federal Energy Regulatory Commission, 888 First Street, NE., Washington, DC 20426, in accordance with Rules 211 and 214 of the Commission's Rules of Practice and Procedure (18 CFR 385.211 and 385.214). All such motions and protests should be filed on or before October 3, 2000. Protests will be considered by the Commission to determine the appropriate action to be taken, but will not serve to make protestants parties to the proceedings. Any person wishing to become a party must file a motion to intervene. Copies of this filing are on file with the Commission and are available for public inspection. This filing may be viewed on the Internet at http://www.ferc.fed.us/online/rims.htm (call 202–208–2222 for assistance).

David P. Boergers,

Secretary.

[FR Doc. 00–24511 Filed 9–23–00; 8:45 am]

BILLING CODE 6717–01–M

DEPARTMENT OF ENERGY

Federal Energy Regulatory Commission

[Docket No. RP00–513–001]

Colorado Interstate Gas Company; Notice of Tariff Filing

September 19, 2000.

Take notice that on September 8, 2000, Colorado Interstate Gas Company (CIG), tendered for filing to become part of its FERC Gas Tariff, First Revised

Volume No. 1, Substitute Sixteenth Revised Sheet No. 10, to be effective October 1, 2000.

CIG states that on August 31, 2000, CIG made its annual filing adjusting its Gas Quality Control Surcharge(s). It has come to CIG's attention that the tariff sheets included herein contained a typographical error. Therefore, CIG is herein submitting substitute tariff sheets which correct such error.

CIG further states that copies of this filing have been served on CIG's jurisdictional customers and public bodies.

Any person desiring to protest this filing should file a protest with the Federal Energy Regulatory Commission, 888 Firrst Street, NE., Washington, DC 20426, in accordance with Section 385.211 of the Commission's Rules and Regulations. All such protests must be filed as provided in Section 154.210 of the Commission's Regulations. Protests will be considered by the Commission in determining the appropriate action to be taken, but will not serve to make protestants parties to the proceedings. Copies of this filing are on file with the Commission and are available for public inspection in the Public Reference Room. This filing may be viewed on the web at http://www.ferc.fed.us/online/rims.htm (call 202–2222 for assistance).

David P. Boergers,

Secretary.

[FR Doc. 00–24518 Filed 9–22–00; 8:45 am]

BILLING CODE 6717–01–M

DEPARTMENT OF ENERGY

[Docket No. RP00–423–002]

Discovery Gas Transmission LLC; Notice of Compliance Filing

September 19, 2000.

Take notice that on September 13, 2000, Discovery Gas Transmission LLC (Discovery) tendered for filing as part of its FERC Gas Tariff, Original Volume No. 1, the following substitute tariff sheets to comply with the Commission's letter order issued in the captioned proceeding on August 25, 2000, which accepted these tariff sheets to be effective March 27, 2000. The substitute tariff sheets revised the issue date and effective date of the tariff sheets, but contain no textual changes.

Substitute Second Revised Sheet No. 151
Substitute Second Revised Sheet No. 152
Substitute Original Sheet No. 152A
Substitute Third Revised Sheet No. 154
Substitute Original Sheet No. 154A
Substitute Third Revised Sheet No. 155
Substitute Second Revised Sheet No. 156

Discovery states that copies of this filing are being mailed to its customers, state commissions and other interested parties.

Any person desiring to protest this filing should file a protest with the Federal Energy Regulatory Commission, 888 First Street, NE., Washington, DC 20426, in accordance with Section 385.211 of the Commission's Rules and Regulations. All such protests must be filed as provided in Section 154.210 of the Commission's Regulations. Protests will be considered by the Commission in determining the appropriate action to be taken, but will not serve to make protestants parties to the proceedings. Copies of this filing are on file with the Commission and are available for public inspection in the Public Reference Room. This filing may be viewed on the web at http//www.ferc.fed.us/online/rims.htm (call 202–208–2222 for assistance).

David P. Boergers,

Secretary.

[FR Doc. 00–24517 Filed 9–22–00; 8:45 am]

BILLING CODE 6717–01–M

DEPARTMENT OF ENERGY

Federal Energy Regulatory Commission

[Docket No. RP00–540–000]

East Tennessee Natural Gas Company; Notice of Proposed Changes in FERC Gas Tariff

September 19, 2000.

Take notice that on September 13, 2000, East Tennessee Natural Gas Company (East Tennessee) tendered for filing as part of its FERC Gas Tariff, Second Revised Volume No. 1, the following tariff sheets to be effective October 14, 2000:

Third Revised Sheet No. 170
First Revised Sheet No. 171

East Tennessee states that the purpose of this filing is to provide for a non-discriminatory waiver of the tariff provision which requires reimbursement for shipper-requested expansion facilities based upon an economic evaluation of the impact of the new facilities. East Tennessee states that waiver of the facility cost reimbursement requirement will be evaluated on the basis of various economic criteria, including estimated throughput, cost of the facilities, operating and maintenance as well as administrative and general expenses attributable to the facilities, system net revenues estimated to be generated and the availability of capital funds. East Tennessee states that it is proposing this tariff change in response to customer requests and to assist East Tennessee in the remarketing of turnback capacity.

East Tennessee states that copies of its filing have been mailed to all affected customers and interested state commissions.

Any person desiring to be heard or to protest said filing should file a motion to intervene or a protest with the Federal Energy Regulatory Commission, 888 First Street, N.E., Washington, D.C. 20426, in accordance with Sections 385.214 or 385.211 of the Commission's Rules and Regulations. All such motions or protests must be filed in accordance with Section 154.210 of the Commission's Regulations. Protests will be considered by the Commission in determining the appropriate action to be taken, but will not serve to make protestants parties to the proceedings. Any person wishing to become a party must file a motion to intervene. Copies of this filing are on file with the Commission and are available for public inspection in the Public Reference Room. This filing may be viewed on the web at http://www.ferc.fed.us/online/rims.htm (call 202–208–2222 for assistance).

David P. Boergers,

Secretary.

[FR Doc. 00–24523 Filed 9–22–00; 8:45 am]

BILLING CODE 6717–01–M

DEPARTMENT OF ENERGY

Federal Energy Regulatory Commission

[Docket Nos. ER99–231–002; ER99–232–002; ER99–478–002; Docket No. EL99–6–002]

Entergy Services, Inc.; Sam Rayburn G&T Electric Cooperative, Inc. v. Entergy Services, Inc. Entergy Gulf States, Inc.; Notice of Filing

September 19, 2000.

Take notice that on September 14, 2000, Entergy Services, Inc. (Entergy Services), on behalf of Entergy Gulf States, Inc., tendered for filing its refund report in the above-captioned dockets as required by the Commission's August 21, 2000 letter order.

Any person desiring to be heard or to protest such filing should file a motion to intervene or protest with the Federal Energy Regulatory Commission, 888 First Street, NE., Washington, DC 20426, in accordance with Rules 211 and 214 of the Commission's Rules of Practice and Procedure (18 CFR 385.211 and 385.214). All such motions and protests

should be filed on or before October 5, 2000. Protests will be considered by the Commission to determine the appropriate action to be taken, but will not serve to make protestants parties to the proceedings. Any person wishing to become a party must file a motion to intervene. Copies of this filing are on file with the Commission and are available for public inspection. This filing may also be viewed on the Internet at http://www.ferc.fed.us/online/rims.htm (call 202–208–2222 for assistance).

David P. Boergers,

Secretary.

[FR Doc. 00–24512 Filed 9–22–00; 8:45 am]

BILLING CODE 6717–01–M

DEPARTMENT OF ENERGY

Federal Energy Regulatory Commission

[Docket No. RP00–427–001]

Sabine Pipe Line LLC; Notice of Compliance Filing

September 19, 2000.

Take notice that on September 13, 2000 Sabine Pipe Line LLC (Sabine) tendered for filing as part of its FERC Gas Tariff, Original Volume No. 1, the following substitute tariff sheets to comly with the Commission's letter order issued in the captioned proceeding on August 25, 2000, which accepted these tariff sheets to be effective March 27, 2000. The substitute tariff sheets revise the issue date and effective date of the tariff sheets, but contain no textual changes.

Substitute First Revised Sheet No. 250
Substitute Original Sheet No. 250A
Substitute First Revised Sheet No. 252
Substitute First Revised Sheet No. 255
Substitute First Revised Sheet No. 267
Substitute First Revised Sheet No. 267A

Sabine states that copies of this filing are being mailed to its customers, state commissions and other interested parties.

Any person desiring to protest this filing should file a protest with the Federal Energy Regulatory Commission, 888 First Street, NE., Washington, DC 20426, in accordance with section 385.211 of the Commission's Rules and Regulations. All such protests must be filed as provided in Section 154.210 of the Commission's Regulations. Protests will be considered by the Commission in determining the appropriate action to be taken, but will not serve to make protestants parties to the proceedings. Copies of this filing are on file with the Commission and are available for public inspection in the Public Reference Room. This filing may be viewed on the web at http://www.ferc.fed.us/online/rims.htm (call 202–208–2222 for assistance).

David P. Boergers,

Secretary.

[FR Doc. 00–24519 Filed 9–22–00; 8:45 am]

BILLING CODE 6717–01–M

DEPARTMENT OF ENERGY

Federal Energy Regulatory Commission

[Docket No. GT00–36–001]

Texas Eastern Transmission Corporation; Notice of Errata Filing

September 19, 2000.

Take notice that on September 13, 2000, Texas Eastern Transmission Corporation (Texas Eastern) tendered for filing as part of its FERC Gas Tariff, Sixth Revised Volume No. 1, a correction to its September 1, 2000 filing of its report of recalculated Operational Segment Capacity Entitlements to become effective November 1, 2000.

Texas Eastern states that its September 1 Filing failed to reflect the operational segment capacity entitlements of one of its customers. Accordingly, Appendices A and A1 have been revised to include the operational segment capacity entitlements for Proliance Energy LLC.

Texas Eastern states that copies of the filing were served on all affected customers of Texas Eastern and interested state commissions.

Any person desiring to protest this filing should file a protest with the Federal Energy Regulatory Commission, 888 First Street, NE, Washington, DC 20426, in accordance with Section 385.211 of the Commission's Rules and Regulations. All such protests must be filed as provided in Section 154.210 of the Commission's Regulations. Protests will be considered by the Commission in determining the appropriate action to be taken, but will not serve to make protestants parties to the proceedings. Copies of this filing are on file with the Commission and are available for public inspection in the Public Reference Room. This filing may be viewed on the web at http://www.ferc.fed.us/online/rims.htm (call 202–208–2222 for assistance).

David P. Boergers,

Secretary.

[FR Doc. 00–24516 Filed 9–22–00; 8:45 am]

BILLING CODE 6717–01–M

DEPARTMENT OF ENERGY

Federal Energy Regulatory Commission

[Docket No. RP00–543–000]

Texas Eastern Transmission Corporation; Notice of Proposed Changes in FERC Gas Tariff

September 19, 2000.

Take notice that on September 15, 2000, Texas Eastern Transmission Corporation (Texas Eastern) tendered for filing as part of its FERC Gas Tariff, Sixth Revised Volume No. 1, the revised tariff sheets listed on Appendix A to the filing, to become effective on November 1, 2000.

Texas Eastern states that the purpose of this filing is to provide its customers firm hourly flexibility up to 110% of 1/24th of their contract MDQ for 6 hours on any day under Rate Schedules CDS, FT–1, SCT, and SS–1. Texas Eastern states that the goal of the filing is that customers will receive commencing November 1, 2000, enhanced reliability and flexibility through the right to vary takes on an hourly basis during a day and that Texas Eastern would be able to mitigate, to the extent practicable, the issuance of OFOs in the winter of 2000–2001.

Texas Eastern requests expedited action on its filing and that it be accepted without modification or condition so that this enhanced service will be available to customers during the winter of 2000–2001.

Texas Eastern states that it will reserve 130,000 dekatherms per day of capacity on its main line from the Lebanon Lateral to the Zone M2/M3 boundary, which capacity will operate essentially as additional storage on the Texas Eastern system that is necessary to provide the firm up of additional hourly flexibility. Texas Eastern also states that it will fund the dedication of capacity to provide this additional hourly flexibility through the elimination of the storage cost credit contained in Rate Schedules SS–1, FSS–1, SS, and X–28.

Texas Eastern states that it is proposing that its revised tariff sheets be placed into effect on an experimental, interim basis. Texas Eastern would submit a study in May 2001 following the experimental effectiveness of the hourly firm up indicating the results to date on service and operations of the revised tariff sheets. Texas Eastern states that Customers would be free to comment on Texas Eastern's study and the desirability of extending the program beyond October 31, 2001.

Texas Eastern states that copies of the filing were mailed to all affected customers and interested state commissions.

Any person desiring to be heard or to protest said filing should file a motion to intervene or a protest with the Federal Energy Regulatory Commission, 888 First Street, NE., Washington, DC 20426, in accordance with Sections 385.214 or 385.211 of the Commission's Rules and Regulations. All such motions or protests must be filed in accordance with Section 154.210 of the Commission's Regulations. Protests will be considered by the Commission in determining the appropriate action to be taken, but will not serve to make protestants parties to the proceedings. Any person wishing to become a party must file a motion to intervene. Copies of this filing are on file with the Commission and are available for public inspection in the Public Reference Room. This filing may be viewed on the web at http://www.ferc.fed.us/online/rims.htm (call 202–208–2222 for assistance).

David P. Boergers,

Secretary.

[FR Doc. 00–24521 Filed 9–22–00; 8:45 am]

BILLING CODE 6717–01–M

DEPARTMENT OF ENERGY

Federal Energy Regulatory Commission

[Docket No. ER00–3671–000, et al.]

Entergy Services, Inc., et al.; Electric Rate and Corporate Regulation Filings

September 18, 2000.

Take notice that the following filings have been made with the Commission:

1. Entergy Services, Inc.

[Docket No. ER00–3671–000]

Take notice that on September 14, 2000, Entergy Services, Inc., on behalf of Entergy Louisiana, Inc., tendered for filing an Interconnection and Operating Agreement with Occidental Chemical Corporation (Occidental) for Occidental's Convent, Louisiana facility, and a Generator Imbalance Agreement with Occidental.

Comment date: October 5, 2000, in accordance with Standard Paragraph E at the end of this notice.

2. The Detroit Edison Company DTE Energy Trading, Inc.

[Docket No. ER00–3672–000]

Take notice that on September 14, 2000, The Detroit Edison Company and DTE Energy Trading, Inc., tendered for filing an application requesting modification of tariffs and codes of conduct and acceptance of service agreements.

Comment date: October 5, 2000, in accordance with Standard Paragraph E at the end of this notice.

3. California Independent System Operator Corporation

[Docket No. ER00–3673–000]

Take notice that on September 14, 2000, the California Independent System Operator Corporation (ISO), tendered for filing a proposed amendment (Amendment No. 31) to the ISO Tariff. Amendment No. 31 includes proposed changes to the ISO Tariff to remove the existing termination date of the ISO's authority to disqualify Imbalance Energy and Ancillary Service bids that exceed levels specified by the ISO, and to confirm the ISO's authority to establish price caps for all of its markets.

The ISO states that this filing has been served upon the California Public Utilities Commission, the California Energy Commission, the California Electricity Oversight Board, and all parties with effective Scheduling Coordinator Service Agreements under the ISO Tariff.

Comment date: October 5, 2000, in accordance with Standard Paragraph E at the end of this notice.

4. Wisconsin Public Service Corporation

[Docket No. ER00–3677–000]

Take notice that on September 14, 2000, Wisconsin Public Service Corporation (WPSC), tendered for filing an executed Service Agreement with Consolidated Water Power Company providing for transmission service under FERC Electric Tariff, Volume No. 1.

Comment date: October 5, 2000, in accordance with Standard Paragraph E at the end of this notice.

5. Southern Indiana Gas and Electric Company

[Docket No. ER00–3678–000]

Take notice that on September 14, 2000, Southern Indiana Gas and Electric Company (SIGECO), tendered for filing a Wholesale Energy Service Agreement dated August 22, 2000, by and between Southern Indiana Gas and Electric Company and Public Service Company of Colorado. The agreement concerns the provision of electric service as an umbrella service agreement under its market-based Wholesale Power Sales Tariff:

Comment date: October 5, 2000, in accordance with Standard Paragraph E at the end of this notice.

6. PECO Energy Company

[Docket No. ER00–3679–000]

Take notice that on September 14, 2000, PECO Energy Company (PECO), tendered for filing under Section 205 of the Federal Power Act, 16 U.S.C. 792 *et seq.*, an Agreement dated February 9, 2000 with Conectiv Energy Supply, Inc. (CESI) under PECO's FERC Electric Tariff Original Volume No. 1 (Tariff).

PECO requests an effective date of October 1, 2000 for the Agreement.

PECO states that copies of this filing have been supplied to Conectiv Energy Supply, Inc., and to the Pennsylvania Public Utility Commission.

Comment date: October 5, 2000, in accordance with Standard Paragraph E at the end of this notice.

7. Avista Corp.

[Docket No. ER00–3680–000]

Take notice that on September 14, 2000, Avista Corp. (AVA), tendered for filing with the Federal Energy Regulatory Commission executed Service Agreements for Short-Term Firm and Non-Firm Point-To-Point Transmission Service under AVA's Open Access Transmission Tariff—FERC Electric Tariff, Volume No. 8 with The Legac Energy Group, LLC.

AVA requests the Service Agreements be given a respective effective date of August 22, 2000.

Comment date: October 5, 2000, in accordance with Standard Paragraph E at the end of this notice.

8. PJM Interconnection, L.L.C.

[Docket No. ER00–3681–000]

Take notice that on September 14, 2000, PJM Interconnection, L.L.C. (PJM), tendered for filing an executed initial interconnection service agreement between PJM and Liberty Electric Power, LLC.

PJM requests a waiver of the Commission's 60-day notice requirement to permit the effective date agreed to by the parties.

Copies of this filing were served upon each of the parties to the agreements of the state regulatory commissions within the PJM control area.

Comment date: October 5, 2000, in accordance with Standard Paragraph E at the end of this notice.

9. Engelhard Power Marketing, Inc.

[Docket No. ER00–3683–000]

Take notice that on September 14, 2000, Engelhard Power Marketing, Inc., tendered for filing its Notice of

Cancellation effective November 13, 2000, pursuant to Sections 35.15 and 131.53 of the Commission's Regulations, 18 CFR 35.15 and 131.53, with respect to Rate Schedules FERC Nos. 1 through 19, and any supplements thereto.

Engelhard no longer is trading electric power as a power marketer and accordingly is canceling its rates and supplements.

Comment date: October 5, 2000, in accordance with Standard Paragraph E at the end of this notice.

10. Illinois Power Company

[Docket No. ER00–3684–000]

Take notice that on September 14, 2000, Illinois Power Company (Illinois Power), 500 South 27th Street, Decatur, Illinois 62526, tendered for filing firm and non-firm transmission agreements under which Conectiv Energy Supply, Inc., will take transmission service pursuant to its open access transmission tariff. The agreements are based on the Form of Service Agreement in Illinois Power's tariff.

Illinois Power has requested an effective date of September 15, 2000.

Comment date: October 5, 2000, in accordance with Standard Paragraph E at the end of this notice.

11. Tucson Electric Power Company

[Docket No. ER00–3685–000]

Take notice that on September 14, 2000, Tucson Electric Power Company (Tucson), tendered for filing one (1) Service Agreement for Retail Network Integration Transmission Service dated August 16, 2000 with Arizona Electric Power Cooperative, Inc. (AEPCO) under Tucson's Open Access Transmission Tariff (Tariff). The Service Agreement adds AEPCO as a customer under the Tariff.

Tucson requests an effective date of August 16, 2000, for the Service Agreement.

The details of the service agreement is as follows:

(1) Service Agreement for Network Integration Transmission Service by and between Tucson Electric Power Company and Arizona Electric Power Cooperative, Inc.—FERC Electric Tariff Vol. No. 2, Service Agreement No. 141. Service commenced on August 28, 2000.

Comment date: October 5, 2000, in accordance with Standard Paragraph E at the end of this notice.

12. Virginia Electric and Power Company

[Docket No. ER00–3686–000]

Take notice that on September 14, 2000, Virginia Electric and Power Company (Virginia Power or the Company), tendered for filing (1) Service Agreement for Firm Point-to-Point Transmission Service by Virginia Electric and Power Company to NRG Power Marketing Inc. designated as Service Agreement No. 299 under the Company's FERC Electric Tariff, Second Revised Volume No. 5; (2) Service Agreement for Non-Firm Point-to-Point Transmission Service by Virginia Electric and Power Company to NRG Power Marketing Inc. designated as Service Agreement No. 300 under the Company's FERC Electric Tariff, Second Revised Volume No. 5.

The foregoing Service Agreements are tendered for filing under the Open Access Transmission Tariff to Eligible Purchasers effective June 7, 2000. Under the tendered Service Agreements, Virginia Power will provide point-to-point service to NRG Power Marketing Inc. under the rates, terms and conditions of the Open Access Transmission Tariff.

Virginia Power requests an effective date of September 14, 2000, the date of filing of the Service Agreements.

Copies of the filing were served upon NRG Power Marketing Inc., the Virginia State Corporation Commission, and the North Carolina Utilities Commission.

Comment date: October 5, 2000, in accordance with Standard Paragraph E at the end of this notice.

13. The Connecticut Light and Power Company, Western Massachusetts Electric Company, United Illuminating Company, Central Maine Power Company, Fitchburg Gas and Electric Light Company, New England Power Company, Public Service Company of New Hampshire, Dominion Resources, Inc. and Dominion Nuclear Connecticut, Inc.

[Docket Nos. EC00–137–000 and ER00–3639–000]

Take notice that on September 8, 2000, the Connecticut Light and Power Company, Western Massachusetts Electric Company, United Illuminating Company, Central Maine Power Company, Fitchburg Gas and Electric Light Company, New England Power Company, Public Service Company of New Hampshire, Dominion Resources, Inc. and Dominion Nuclear Connecticut, Inc. (DNC) (collectively, Applicants) tendered for filing an application under Section 203 of the Federal Power Act for approval of the disposition of jurisdictional facilities that will result from the sale of the Millstone Nuclear Power Station to DNC and for acceptance under Section 205 of the Federal Power Act an interconnection agreement relating to that facility, and an amendment to a transmission support agreement. Also on September 12, 2000, a supplement to the application was filed with the Commission in the above-referenced dockets.

The Applicants state that copies of the application have been mailed to Dominion Nuclear Connecticut, the Connecticut Department of Public Utility Control, the Massachusetts Department of Telecommunications and Energy, the New Hampshire Public Utilities Commission, the Vermont Public Service Board, the Maine Public Utilities Commission, the New York Public Service Commission, the New Jersey Board of Public Utilities, and the Pennsylvania Public Utility Commission.

Comment date: October 10, 2000, in accordance with Standard Paragraph E at the end of this notice.

Standard Paragraphs

E. Any person desiring to be heard or to protest such filing should file a motion to intervene or protest with the Federal Energy Regulatory Commission, 888 First Street, NE., Washington, DC 20426, in accordance with Rules 211 and 214 of the Commission's Rules of Practice and Procedure (18 CFR 385.211 and 385.214). All such motions or protests should be filed on or before the comment date. Protests will be considered by the Commission in determining the appropriate action to be taken, but will not serve to make protestants parties to the proceeding. Any person wishing to become a party must file a motion to intervene. Copies of these filings are on file with the Commission and are available for public inspection. This filing may also be viewed on the Internet at http://www.ferc.fed.us/online/rims.htm (call 202–208–2222 for assistance).

David P. Boergers,

Secretary.

[FR Doc. 00–24510 Filed 9–22–00; 8:45 am]

BILLING CODE 6717–01–P

DEPARTMENT OF ENERGY

Federal Energy Regulatory Commission

[Project No. 11616–000–Michigan; Project No. 2566–010–Michigan]

City of Portland, Michigan, Consumers Energy Company; Notice of Availability of Draft Environmental Assessment

September 19, 2000.

In accordance with the National Environmental Policy Act of 1969 and the Federal Energy Regulatory

Commission's (Commission's) regulations, 18 CFR Part 380 (Order No. 486, 52 FR 47897), the Office of Energy Projects has reviewed the City of Portland's application for original license for the operating unlicensed Portland Municipal Hydroelectric Project, and Consumers Energy Company's new license for the continued operation of the Webber Hydroelectric Project, located on the Grand River, in the City of Portland, Ionia County, Michigan, and has prepared a Draft Environmental Assessment (DEA) for the projects. In the DEA, the Commission's staff has analyzed the potential environmental effects of the projects and has concluded that licensing the projects, with staffs recommended measures, would not constitute a major federal action significantly affecting the quality of the human environment.

Copies of the DEA are available for review in the Public Reference Branch, Room 2–A, of the Commission's offices at 888 First Street, NE., Washington, DC 20426. The DEA may also be viewed on the web at *http://www.ferc.us/online/rims.htm.* Please call (202) 208–2222 for assistance.

Anyone may file comments on the EA. The public, federal and state resource agencies are encouraged to provide comments. All written comments must be filed within 45 days from the issuance date of this notice shown above. Send an original and eight copies of all comments marked with Project No. 11616–000 or Project No. 2566–010 to: The Secretary, Federal Energy Regulatory Commission, 888 First Street, NE., Washington, DC 20426. If you have any questions regarding this notice, please contact Tom Dean at (202) 219–2778.

David P. Boergers,

Secretary.

[FR Doc. 00–24515 Filed 9–22–00; 8:45 am]

BILLING CODE 6717–01–M

DEPARTMENT OF ENERGY

Federal Energy Regulatory Commission

Notice of Settlement Agreement and Soliciting Comments

September 19, 2000.

Take notice that the following settlement agreement has been filed with the Commission and is available for public inspection:

a. *Type:* Settlement Offer on New License Application.

b. *Project No.:* 2016–044.

Project Name: Cowlitz River.

Applicant: City of Tacoma.

c. *Date Settlement Agreement Filed:* September 11, 2000.

d. *Location:* On the Cowlitz River, in Lewis County, Washington. About 5 acres are included within the Gifford Pinchot National Forest and about 59 acres are on lands owned by the Bureau of Land Management.

e. *Filed Pursuant to:* Rule 602 of the Commission's Rules of Practice and Procedure, 18 CFR 385.602.

f. *Applicant's Contact:* Toby Freeman, Tacoma Power, 3628 South 35th Street, Tacoma, WA 98411; (253) 502–8862.

g. *FERC Contact:* David Turner (202) 219–2844, Email: david.turner@ferc.fed.us.

h. *Deadline Dates:* Comments due: October 18, 2000; reply comments due: November 2, 2000.

i. *All documents (original and eight copies) should be filed with:* David P. Boergers, Secretary, Federal Energy Regulatory Commission, 888 First Street, NE., Washington, DC 20426.

The Commission's Rules of Practice and Procedure require all interveners filing documents with the Commission to serve a copy of that document on each person on the official service list for the project. Further, if an intervener files comments or documents with the Commission relating to the merits of an issue that may affect the responsibilities of a particular resource agency, they must also serve a copy of the document on that resource agency.

j. A Settlement Agreement was filed with the Commission on September 11, 2000. The agreement is the final, executed Cowlitz River Hydroelectric Project Settlement Agreement for the relicensing of Project No. 2016. The purpose of the Settlement is to resolve among the signatory parties all issues associated with issuance of a new license for the project regarding fish passage, fish production, fish habitat, water quality, instream flows, wildlife, recreation, and cultural and historic resources. Comments and reply comments on the Offer of Settlement are due on the dates listed above. Interested parties that have already filed comments on the settlement do not need to file their comments again for them to be considered by the Commission.

k. Copies of the offer of settlement are available for inspection and reproduction at the Commission's Public Reference Room, located at 888 First Street, NE., Room 2A, Washington, DC 20426, or by calling (202) 208–1371. This filing may be viewed on http://www.ferc.fed.us/online/rims.htm (call 202–208–2222 for assistance) or at the address listed in item f above.

David P. Boergers,

Secretary.

[FR Doc. 00–24514 Filed 9–22–00; 8:45 am]

BILLING CODE 6717–01–M

DEPARTMENT OF ENERGY

Federal Energy Regulatory Commission

Sunshine Act meeting

September 20, 2000.

The following notice of meeting is published pursuant to Section 3(A) of the Government in the Sunshine Act (Pub. L. No. 94–409), 5 U.S.C 552B:

AGENCY HOLDING MEETING: Federal Energy Regulatory Commission.

DATE AND TIME: September 27, 2000, 10 a.m.

PLACE: Room 2C, 888 First Street, NE., Washington, DC 20426.

STATUS: Open.

MATTERS TO BE CONSIDERED: Agenda.

Note: Items Listed on the agenda may be deleted without further notice.

CONTACT PERSON FOR MORE INFORMATION SECRETARY: David P. Boergers, Secretary, Telephone (202) 208–0400. For a recording listing items stricken from or added to the meeting, call (202) 208–1627.

This is a list of matters to be considered by the Commission. It does not include a listing of all papers relevant to the items on the agenda; however, all public documents may be examined in the reference and information center.

748th—Meeting September 27, 2000, Regular Meeting (10 a.m.)

Consent Agenda—Markets, Tariffs and Rates—Electric

CAE–1.
Omitted
CAE–2.
Omitted
CAE–3.
Omitted
CAE–4.
Docket # ER00–3152, 000, CMS Marketing, Services and Trading Company
Other #s ER00–3152, 001, CMS Marketing, Services and Trading Company
CAE–5.
Omitted
CAE–6.
Docket # EC96–19, 053, California Independent System Operator Corporation
Other #s ER96–1663, 056, California Independent System Operator Corporation
ER98–3760, 005, California Independent System Operator Corporation

CAE–7.
Omitted
CAE–8.
Omitted
CAE–9.
Docket # ER97–1523, 028, Central Hudson Gas & Electric Corporation, Consolidated Edison Company of New York, Inc., New York State Electric & Gas Corporation, Niagara Mohawk Power Corporation, Orange and Rockland Utilities, Inc. and Rochester Gas and Electric Corporation
Other #s OA97–470, 026, Central Hudson Gas & Electric Corporation, Consolidated Edison Company of New York, Inc., New York State Electric & Gas Corporation, Niagara Mohawk Power Corporation, Orange and Rockland Utilities, Inc. and Rochester Gas and Electric Corporation
ER97–4234, 024, Central Hudson Gas & Electric Corporation, Consolidated Edison Company of New York, Inc., New York State Electric & Gas Corporation, Niagara Mohawk Power Corporation, Orange and Rockland Utilities, Inc. and Rochester Gas and Electric Corporation
CAE–10.
Docket # ER97–913, 000, Connecticut Yankee Atomic Power Company
CAE–11.
Docket # ER00–26, 002, Central Maine Power Company
Other #s ER97–1326, 000, Central Maine Power Company
ER97–1326, 001, Central Maine Power Company
ER97–1326, 002, Central Maine Power Company
ER99–238, 000, Central Maine Power Company
ER99–238, 001, Central Maine Power Company
ER99–238, 002, Central Maine Power Company
ER99–4534, 000, Central Maine Power Company
ER99–4534, 001, Central Maine Power Company
ER99–4534, 002, Central Maine Power Company
ER00–26, 000, Central Maine Power Company
ER00–26, 001, Central Maine Power Company
EL00–44, 000, Central Maine Power Company
EL00–44, 001, Central Maine Power Company
EL00–44, 002, Central Maine Power Company
ER00–604, 000, Central Maine Power Company
ER00–604, 003, Central Maine Power Company
ER00–604, 004, Central Maine Power Company
ER00–982, 000, Central Maine Power Company
ER00–982, 002, Central Maine Power Company
ER00–982, 003, Central Maine Power Company
ER00–1638, 000, Central Maine Power Company
ER00–1638, 001, Central Maine Power Company
ER00–1638, 002, Central Maine Power Company
CAE–12.
Docket # ER00–3295, 000, International Transmission Company
CAE–13.
Docket # OA97–261, 002, Pennsylvania-New Jersey-Maryland Interconnection
Other #s EC96–28, 003, Atlantic City Electric Company, Baltimore Gas and Electric Company, Delmarva Power & Light Company, Jersey Central Power & Light Company, Metropolitan Edison Company, Pennsylvania Electric Company, Pennsylvania Power & Light Company, Potomac Electric Power Company and Public Service Electric and Gas Company
EC96–29, 003, PECO Energy Company
EL96–69, 003, Atlantic City Electric Company, Baltimore Gas and Electric Company, Delmarva Power & Light Company, Jersey Central Power & Light Company, Metropolitan Edison Company, Pennsylvania Electric Company, Pennsylvania Power & Light Company, Potomac Electric Power Company and Public Service Electric and Gas Company
ER96–2516, 003, Atlantic City Electric Company, Baltimore Gas and Electric Company, Delmarva Power & Light Company, Jersey Central Power & Light Company, Metropolitan Edison Company, Pennsylvania Electric Company, Pennsylvania Power & Light Company, Potomac Electric Power Company and Public Service Electric and Gas Company
ER96–2668, 003, PECO Energy Company
EC97–38, 001, Pennsylvania Electric Company, Pennsylvania Power & Light Company, Potomac Electric Power Company, Public Service Electric and Gas Company, Atlantic City Electric Company, Baltimore Gas and Electric Company, Delmarva Power & Light Company, Jersey Central Power & Light Company and Metropolitan Edison Company
EL97–44, 001, Pennsylvania-New Jersey-Maryland Interconnection Restructuring
OA97–678, 001, PJM Interconnection, L.L.C.
ER97–1082, 002, Pennsylvania-New Jersey-Maryland Interconnection
ER97–3189, 016, Atlantic City Electric Company, Baltimore Gas and Electric Company, Delmarva Power & Light Company, Jersey Central Power & Light Company and Metropolitan Edison Company
ER97–3273, 001, Pennsylvania Electric Company, Pennsylvania Power & Light Company, Potomac Electric Power Company, Public Service Electric and Gas Company and Pennsylvania-New Jersey-Maryland Interconnection Restructuring
CAE–14.
Docket # EC96–19, 024, California Independent System Operator Corporation
Other #s ER96–1663, 025, California Independent System Operator Corporation
CAE–15.
Omitted
CAE–16.
Docket # EL98–73, 001, Clarksdale Public Utilities Commission v. Entergy Services, Inc., as Agent for Entergy Arkansas, Inc., Entergy Louisiana, Inc., Entergy Mississippi, Inc., Entergy New Orleans, Inc. and Entergy Gulf States, Inc.
CAE–17.
Docket # ER99–237, 002, Allegheny Power Service Corporation on Behalf of Monongahela Power Company, Potomac Edison Company and West Penn Power Company
Other #s ER96–58, 003, Allegheny Power Service Corporation on Behalf of Monongahela Power Company, Potomac Edison Company and West Penn Power Company
CAE–18.
Omitted
CAE–19.
Docket # EL00–40, 001, Dighton Power Associates Limited Partnership, FPL Energy, L.L.C., Southern Energy New England, L.L.C. and Southern Energy Kendall, L.L.C. v. ISO New England, Inc.
CAE–20.
Omitted
CAE–21.
Docket # ER00–2360, 002, Pacific Gas and Electric Company
CAE–22.
Docket # EL00–83, 002, NSTAR Services Company v. New England Power Pool
Other #s EL00–62, 007, ISO New England, Inc.
ER00–2052, 006, ISO New England, Inc.
ER00–2811, 002, ISO New England, Inc.
ER00–2937, 001, ISO New England, Inc.
CAE–23.
Omitted
CAE–24.
Docket # EL99–65, 000, Sithe/Independence Power Partners, L.P. v. Niagara Mohawk Power Corporation
CAE–25.
Docket # EL00–96, 000, Old Dominion Electric Cooperative v. PJM Interconnection L.L.C. and Conectiv
CAE–26.
Docket # EL00–71, 000, City of Detroit, Michigan v. The Detroit Edison Company
CAE–27.
Omitted
CAE–28.
Docket # EC00–100, 000, Entergy Nuclear Indian Point 3, LLC and Entergy Nuclear Fitzpatrick, LLC
CAE–29.
Docket # EL00–90, 000, Morgan Stanley Capital Group, Inc. v. New York Independent System Operator, Inc.
CAE–30.
Docket # ID–2932, 001, James R. Lientz, Jr.
CAE–31.
Omitted
CAE–32.
Docket # EL00–76, 000, French Broad Electric Membership Corporation v. Carolina Power & Light Company
CAE–33.
Docket # OA99–3, 001, Alcoa Power Generating, Inc.

Consent Agenda—Markets, Tariffs and Rates—Gas

CAG–1.
Docket # RP99–301, 005, ANR Pipeline Company
CAG–2.
Docket # RP99–301, 006, ANR Pipeline Company
CAG–3.
Docket # RP00–514, 000, Southern Natural Gas Company
CAG–4.
Docket # RP00–512, 000, Algonquin LNG, Inc.
CAG–5.
Omitted
CAG–6.
Omitted
CAG–7.
Omitted
CAG–8.
Docket # RP00–500, 000, Chandeleur Pipe Line Company
CAG–9.
Omitted
CAG–10.
Docket # RP99–381, 000, Wyoming Interstate Company, Ltd.
Other #s RP99–381, 006, Wyoming Interstate Company, Ltd.
CAG–11.
Docket # RP00–530, 000, Dauphin Island Gathering Partners
CAG–12.
Docket # RP00–372, 000, ANR Pipeline Company
CAG–13.
Docket # RP97–406, 023, Dominion Transmission, Inc.
CAG–14.
Docket # RP00–289, 001, Tennessee Gas Pipeline Company
CAG–15.
Docket # RP95–363, 019, El Paso Natural Gas Company
CAG–16.
Docket # OR99–15, 000, Wolverine Pipe Line Company
CAG–17.
Docket # RP00–287, 001, Great Lakes Gas Transmission Limited Partnership and Ocean Energy Resources, Inc.
CAG–18.
Docket # RP00–223, 002, Northern Natural Gas Company
Other #s RP00–223, 000, Northern Natural Gas Company
RP00–223, 001, Northern Natural Gas Company
CAG–19.
Docket # RP95–4090, 008, Northwest Pipeline Corporation
CAG–20.
Docket # RP96–129, 008, Trunkline Gas Company
CAG–21.
Docket # RP97–375, 011, Wyoming Interstate Company, Ltd.
Other #s RP99–381, 005, Wyoming Interstate Company, Ltd.
CAG–22.
Docket # TM00–1–22, 003, Dominion Transmission, Inc. (formerly CNG Transmission Corporation)
CAG–23.
Docket # RM96–1, 016, Standards for Business Practices of Interstate Natural Gas Pipelines
CAG–24.
Docket # RP00–275, 001, Chesapeake Panhandle Limited Partnership v. Natural Gas Pipeline Company of America, Micon Gas Products Corporation, Midcon Gas Services Corporation, KN Energy, Inc. and Kinder Morgan, Inc.
CAG–25.
Omitted
CAG–26.
Docket # MG00–9, 000, Michigan Gas Storage Company
CAG–27.
Docket # OR00–7, 000, Navajo Refining Company
Other #s OR96–2 et al., 000, Arco Products Company, a Division of Atlantic Richfield Company, et al. v. SFPP, L.P.
OR98–11, 000, SFPP, L.P.
OR00–7, 001, Navajo Refining Company
OR00–8, 000, Ultramar Diamond Shamrock Corporation and Ultramar Inv. v. SFPP, L.P.
OR00–8, 001, Ultramar Diamond Shamrock Corporation and Ultramar Inc. v. SFPP, L.P.
OR00–9, 000, Tosco Corporation v. SFPP, L.P.
OR00–9, 001, Tosco Corporation v. SFPP, L.P.
OR00–10, 000, Refinery Holding Company, L.P. v. SFPP, L.P.
OR00–10, 001, Refinery Holding Company, L.P. v. SFPP, L.P.
CAG–28.
Docket # RP00–445, 000, Alliance Pipeline, L.P.
Other #s CP97–168, 004, Alliance Pipeline, L.P.
CP97–169, 000, Alliance Pipeline, L.P.
CP97–177, 000, Alliance Pipeline, L.P.
CP97–178, 000, Alliance Pipeline, L.P.

Consent Agenda—Energy Projects—Hydro

CAH–1.
Docket # P–4244, 018, Northumberland Hydro Partners, L.P.
CAH–2.
Docket # P–2538, 047, Erie Boulevard Hydropower, LP
CAH–3.
Docket # P–4632, 020, Clifton Power Corporation
CAH–4.
Docket # P–2188, 030, PP&L Montana, LLC

Consent Agenda—Energy Projects—Certificates

CAC–1.
Omitted
CAC–2.
Docket # CP99–241, 000, ANR Pipeline Company
Other #s CP99–241, 001, ANR Pipeline Company
CAC–3.
Docket # CP00–165, 000, Transcontinental Gas Pipe Line Corporation
CAC–4.
Docket # CP00–91, 000, National Fuel Gas Supply Corporation
Other #s CP00–91, 001, National Fuel Gas Supply Corporation
CAC–5.
Docket # CP00–137, 000, Reliant Energy Gas Transmission Company
CAC–6.
Docket # CP00–446, 000, Montana Power Company
CAC–7.
Omitted
CAC–8.
Docket # CP97–315, 004, Independence Pipeline Company
Other #s CP97–320, 002, Independence Pipeline Company
CP97–321, 002, Independence Pipeline Company

Energy Projects—Hydro Agenda

H–1.
Reserved

Energy Projects—Certificates Agenda

C–1.
Reserved

Markets, Tariffs and Rates—Electric Agenda

E–1.
Omitted

Markets, Tariffs and Rates—Gas Agenda

G–1.
Reserved

David P. Boergers,
Secretary.

[FR Doc. 00–24635 Filed 9–21–00; 11:38 am]
BILLING CODE 6717–01–P

ENVIRONMENTAL PROTECTION AGENCY

[FRL–6876–1]

Agency Information Collection Activities: Submission for OMB Review; Comment Request; Evaluation of PrintSTEP

AGENCY: Environmental Protection Agency (EPA).

ACTION: Notice.

SUMMARY: In compliance with the Paperwork Reduction Act (44 U.S.C. 3501 *et seq.*), this document announces that the following Information Collection Request (ICR) has been forwarded to the Office of Management and Budget (OMB) for review and approval: Evaluation of PrintSTEP, ICR Number 1941.01. The ICR describes the nature of the information collection and its expected burden and cost; where appropriate, it includes the actual data collection instrument.

DATES: Comments must be submitted on or before October 25, 2000.

ADDRESSES: Send comments referencing EPA ICR No. 1941.01 to the following addresses: Sandy Farmer, U.S. Environmental Protection Agency, Collection Strategies Division (Mail Code 2822), 1200 Pennsylvania Avenue,

NW., Washington, DC 20460; and to Office of Information and Regulatory Affairs, Office of Management and Budget (OMB), Attention: Desk Officer for EPA, 725 17th Street, NW., Washington, DC 20503.

FOR FURTHER INFORMATION CONTACT: For a copy of the ICR contact Sandy Farmer at EPA by phone at (202) 260–2740, by email at farmer.sandy@epamail.epa.gov, or download off the Internet at http://www.epa.gov/icr and refer to EPA ICR No. 1941.01. For technical questions about the ICR contact Amy Porter, Office of Compliance, (202) 564–2431.

SUPPLEMENTARY INFORMATION:

Title: Information Collection Request for Evaluation of PrintSTEP, EPA ICR Number 1941.01. This is a new collection.

Abstract: Information will be collected for evaluation of the PrintSTEP pilot program. The evaluation aims to systematically identify the impacts the program has had on three types of stakeholders: printers, community residents, and the state government agencies administering the program.

Specifically, the evaluation will determine the extent to which the 7 goals of the pilot program are met. The goals are: enhanced environmental protection; increased use of pollution prevention practices; simplified regulatory process for printers; improved efficiency of administration for state governments; enhanced public involvement; participants' realize benefits and are motivated to participate in PrintSTEP; and, cost effectiveness for all stakeholders.

This broad set of expected outcomes will require a range of distinct data collection and analysis activities. Data will be gathered from printer's program applications, from telephone interviews, from in-person interviews and possibly from focus groups. Data will be collected before implementation, a short time after program implementation, and at the end of the pilot. Responses to the collection of information are voluntary. Names of persons providing information will be not recorded. More information is available in the final draft of the Evaluation Strategy which can be accessed at http://www.epa.gov/ooaujeag/sectors/pdf/pgm_eval.pdf .

An agency may not conduct or sponsor, and a person is not required to respond to, a collection of information unless it displays a currently valid OMB control number. The OMB control numbers for EPA's regulations are listed in 40 CFR part 9 and 48 CFR Chapter 15. The **Federal Register** document required under 5 CFR 1320.8(d), soliciting comments on this collection of information was published on March 14, 2000, 65 FR 13748. No comments were received.

Burden Statement: The annual public reporting and recordkeeping burden for this collection of information is estimated to average 15 minutes per response for 530 of the respondents and 2.75 hours for 480 of the respondents. Burden means the total time, effort, or financial resources expended by persons to generate, maintain, retain, or disclose or provide information to or for a Federal agency. This includes the time needed to review instructions; develop, acquire, install, and utilize technology and systems for the purposes of collecting, validating, and verifying information, processing and maintaining information, and disclosing and providing information; adjust the existing ways to comply with any previously applicable instructions and requirements; train personnel to be able to respond to a collection of information; search data sources; complete and review the collection of information; and transmit or otherwise disclose the information.

Respondents/Affected Entities: Printers and Community Members.

Estimated Number of Respondents: 158 Printers, 131 Community Members.

Frequency of Response: Printers—annually; Community Members—1 time only.

Estimated Total Annual Hour Burden: 2,000 hours.

Estimated Total Annualized Capital, Operating/Maintenance Cost Burden: $0.

Send comments on the Agency's need for this information, the accuracy of the provided burden estimates, and any suggested methods for minimizing respondent burden, including through the use of automated collection techniques to the addresses listed above. Please refer to EPA ICR No. 1941.01 in any correspondence.

Dated: September 18, 2000.

Oscar Morales,

Director, Collection Strategies Division.

[FR Doc. 00–24571 Filed 9–22–00; 8:45 am]

BILLING CODE 6560–50–P

ENVIRONMENTAL PROTECTION AGENCY

[FRL–6875–9]

Agency Information Collection Activities: Submission for OMB Review; Comment Request; NSPS, Storage Vessels for Petroleum Liquids for Which Construction, Reconstruction, or Modification Commenced after June 11, 1973, and Prior to May 19, 1978

AGENCY: Environmental Protection Agency (EPA).

ACTION: Notice.

SUMMARY: In compliance with the Paperwork Reduction Act (44 U.S.C. 3501 *et seq.*), this document announces that the following Information Collection Request (ICR) has been forwarded to the Office of Management and Budget (OMB) for review and approval: NSPS Subpart K, Storage Vessels for Petroleum Liquids for Which Construction, Reconstruction, or Modification Commenced after June 11, 1973, and Prior to May 19, 1978; OMB Control No. 2060–0442; Expiration November 30, 2000. The ICR describes the nature of the information collection and its expected burden and cost; where appropriate, it includes the actual data collection instrument.

DATES: Comments must be submitted on or before October 25, 2000.

ADDRESSES: Send comments, referencing EPA ICR No. 1797.02 and OMB Control No. 2060–0442, to the following addresses: Sandy Farmer, U.S. Environmental Protection Agency, Collection Strategies Division (Mail Code 2822), 1200 Pennsylvania Avenue, NW., Washington, DC 20460; and to Office of Information and Regulatory Affairs, Office of Management and Budget (OMB), Attention: Desk Officer for EPA, 725 17th Street, NW., Washington, DC 20503.

FOR FURTHER INFORMATION CONTACT: For a copy of the ICR contact Sandy Farmer at EPA by phone at (202) 260–2740, by email at farmer.sandy@epamail.epa.gov, or download off the Internet at http://www.epa.gov/icr and refer to EPA ICR No. 1797.02. For technical questions about the ICR, contact: Everett Bishop at: (202) 564–7032; fax: (202) 564–0050; e-mail: bishop.everett@epa.gov.

SUPPLEMENTARY INFORMATION:

Title: NSPS Subpart K, Storage Vessels for Petroleum Liquids for Which Construction, Reconstruction, or Modification Commenced after June 11, 1973, and Prior to May 19, 1978, OMB Control No. 2060–0442, EPA ICR No. 1797.02, expiring November 30, 2000.

This is a request for extension of a currently approved collection.

Abstract: The New Source Performance Standards (NSPS) for Storage Vessels for Petroleum Liquids, subpart K was proposed on June 11, 1973 and promulgated on March 8, 1974 (39 FR 9308). These performance standards apply to storage vessels of petroleum liquids for which construction, reconstruction, or modification commenced after June 11, 1973, and prior to May 19, 1978. Facilities subject to this subpart are not exceeding 246,052 liters (65,000 gallons), and commences construction or modification after March 8, 1974, and prior to May 19, 1978; and storage vessel that has a capacity greater than 246,052 liters (65,000 gallons), and commences construction or modification after June 11, 1973, and prior to May 19, 1978. There are approximately 220 respondents, reporting on approximately 5,500 petroleum storage vessels that are subject to this standard.

The Subpart K standards require the owner/operator to document the activities of, the storage period, the maximum true vapor pressure, and the type of petroleum liquid stored. This information is recorded only when a petroleum liquid is changed in the storage vessel. Under the standard, the data collected by the affected industry must be retained at the facility for a minimum of two years, and made available to the Administrator either on request or by inspection.

The information generated by the recordkeeping and reporting requirements described above will be used by the Agency to ensure that facilities affected by the NSPS continue to operate in compliance with the NSPS. Notification of construction, reconstruction and startup will indicate to enforcement personnel when a new affected facility has been constructed and, therefore, is subject to the current NSPS subpart Kb standards. The information collected from the recordkeeping and reporting requirements is also used for targeting inspections, and is of sufficient quality to be used as evidence in court. Information is required to be collected and maintained as follows: records are required to be retained for 2 years, section 60.2; owner/operator shall maintain a record of the petroleum liquid stored, the period of storage and the maximum true vapor pressure of that liquid during the respective storage period, section 60.113; filing a report for construction/reconstruction, section 60.7(a)(1) and filing a report on a physical or operational change, section 60.7(a)(4).

An agency may not conduct or sponsor, and a person is not required to respond to, a collection of information unless it displays a currently valid OMB control number. The OMB control numbers for EPA's regulations are listed in 40 CFR part 9 and 48 CFR Chapter 15. The **Federal Register** document required under 5 CFR 1320.8(d), soliciting comments on this collection of information was published on April 18, 2000, (65 FR 20813). No comments were received.

Burden Statement: The annual public reporting and recordkeeping burden for this collection of information is estimated to average 170 hours per response. Burden means the total time, effort, or financial resources expended by persons to generate, maintain, retain, or disclose or provide information to or for a Federal agency. This includes the time needed to review instructions; develop, acquire, install, and utilize technology and systems for the purposes of collecting, validating, and verifying information, processing and maintaining information, and disclosing and providing information; adjust the existing ways to comply with any previously applicable instructions and requirements; train personnel to be able to respond to a collection of information; search data sources; complete and review the collection of information; and transmit or otherwise disclose the information.

Respondents/Affected Entities: Owners/Operators of Storage Vessels for Petroleum Liquids.

Estimated Number of Respondents: 220.

Frequency of Response: Occasionally.

Estimated Total Annual Hour Burden: 678 hours.

Estimated Total Annualized Capital and O&M Cost Burden: $ 0.

Send comments on the Agency's need for this information, the accuracy of the provided burden estimates, and any suggested methods for minimizing respondent burden, including through the use of automated collection techniques to the following addresses. Please refer to EPA ICR No. 1797.02 and OMB Control No. 2060–0442 in any correspondence.

Dated: September 18, 2000.

Oscar Morales,

Director, Collection Strategies Division.

[FR Doc. 00–24572 Filed 9–22–00; 8:45 am]

BILLING CODE 6560–50–P

ENVIRONMENTAL PROTECTION AGENCY

[FRL–6876–3; MM–HQ–2000–0004]

Clean Water Act Class II: Proposed Administrative Settlement, Penalty Assessment and Opportunity To Comment Regarding NEXTLINK Communications, Inc.

AGENCY: Environmental Protection Agency (EPA).

ACTION: Notice.

SUMMARY: EPA has entered into a consent agreement with NEXTLINK Communications, Inc. and its subsidiaries to resolve violations of the Clean Water Act (''CWA''), and its implementing regulations. NEXTLINK failed to prepare Spill Prevention Control and Countermeasure (''SPCC'') plans for eleven facilities where they stored diesel oil in above ground tanks. EPA, as authorized by CWA section 311(b)(6), 33 U.S.C. 1321(b)(6), has assessed a civil penalty for these violations. The Administrator, as required by CWA section 311(b)(6)(C), 33 U.S.C. 1321(b)(6)(C), is hereby providing public notice of, and an opportunity for interested persons to comment on, this consent agreement and proposed final order.

DATES: Comments are due on or before October 25, 2000.

ADDRESSES: Mail written comments to the Enforcement & Compliance Docket and Information Center (2201A), Docket Number EC–2000–008, Office of Enforcement and Compliance Assurance, U.S. Environmental Protection Agency, 1200 Pennsylvania Avenue, NW., Mail Code 2201A, Washington, DC 20460. (Comments may be submitted on disk in WordPerfect 8.0 or earlier versions.) Written comments may be delivered in person to: Enforcement and Compliance Docket Information Center, U.S. Environmental Protection Agency, Rm. 4033, Ariel Rios Bldg., 1200 Pennsylvania Avenue, NW., Washington, DC. Submit comments electronically to *docket.oeca@epa.gov*. Electronic comments may be filed online at many Federal Depository Libraries.

The consent agreement, the proposed final order, and public comments, if any, may be reviewed at the Enforcement and Compliance Docket Information Center, U.S. Environmental Protection Agency, Rm. 4033, Ariel Rios Bldg., 1200 Pennsylvania Avenue, NW., Washington, DC. Persons interested in reviewing these materials must make arrangements in advance by calling the docket clerk at 202–564–2614. A

reasonable fee may be charged by EPA for copying docket materials.

FOR FURTHER INFORMATION CONTACT: Beth Cavalier, Multimedia Enforcement Division (2248–A), U.S. Environmental Protection Agency, 1200 Pennsylvania Avenue, NW., Washington, DC 20460; telephone (202) 564–3271; fax: (202) 564–9001; e-mail: cavalier.beth@epa.gov.

SUPPLEMENTARY INFORMATION:

Electronic Copies: Electronic copies of this document are available from the EPA Home Page under the link ''Laws and Regulations'' at the **Federal Register**—Environmental Documents entry (http://www.epa.gov/fedrgstr).

I. Background

NEXTLINK Communications, Inc., a telecommunications company incorporated in the State of Delaware and located at 1505 Farm Credit Drive, McLean, Virginia 22102, failed to prepare SPCC plans for eleven facilities. NEXTLINK Communications, Inc. disclosed, pursuant to the EPA's ''Incentives for Self-Policing: Discovery, Disclosures, Correction and Prevention of Violations'' (''Audit Policy''), 60 FR 66,706 (December 22, 1995), that they failed to prepare SPCC plans for eleven facilities where they stored diesel oil in above ground storage tanks, in violation of the CWA section 311(b)(3) and 40 CFR Part 112. EPA determined that NEXTLINK met the criteria set out in the Audit Policy for a 100% waiver of the gravity component of the penalty. As a result, EPA waived the gravity based penalty ($43,856.30) and proposed a settlement penalty amount of three thousand, six hundred and three ($3,603.00). This is the amount of the economic benefit gained by NEXTLINK, attributable to their delayed compliance with the SPCC regulations. NEXTLINK Communications, Inc. has agreed to pay this amount in civil penalties. EPA and NEXTLINK negotiated and signed an administrative consent agreement, following the Consolidated Rules of Procedure, 40 CFR 22.13, on September 7, 2000 (*In Re: NEXTLINK Communications, Inc.,* Docket No. MM–HQ–2000–0004). This consent agreement is subject to public notice and comment under CWA section 311(b)(6), 33 U.S.C. 1321(b)(6).

Under CWA section 311(b)(6)(A), 33 U.S.C. 1321(b)(6)(A), any owner, operator, or person in charge of a vessel, onshore facility, or offshore facility from which oil is discharged in violation of the CWA section 311 (b)(3), 33 U.S.C. 1321(b)(3), or who fails or refuses to comply with any regulations that have been issued under CWA section 311(j), 33 U.S.C. 1321(j), may be assessed an administrative civil penalty of up to $137,500 by EPA. Class II proceedings under CWA section 311(b)(6) are conducted in accordance with 40 CFR Part 22.

The procedures by which the public may comment on a proposed Class II penalty order, or participate in a Clean Water Act Class II penalty proceeding, are set forth in 40 CFR 22.45. The deadline for submitting public comment on this proposed final order is October 25, 2000. All comments will be transferred to the Environmental Appeals Board (''EAB'') of EPA for consideration. The powers and duties of the EAB are outlined in 40 CFR 22.04(a).

Pursuant to CWA section 311(b)(6)(C), EPA will not issue an order in this proceeding prior to the close of the public comment period.

List of Subjects

Environmental protection.

Dated: September 18, 2000.

David A. Nielsen,

Director, Multimedia Enforcement Division, Office of Enforcement and Compliance Assurance.

[FR Doc. 00–24574 Filed 9–22–00; 8:45 am]

BILLING CODE 6560–50–U

FEDERAL COMMUNICATIONS COMMISSION

Notice of Public Information Collection(s) Being Reviewed by the Federal Communications Commission, Comments Requested

September 20, 2000.

SUMMARY: The Federal Communications Commission, as part of its continuing effort to reduce paperwork burden invites the general public and other Federal agencies to take this opportunity to comment on the following information collection, as required by the Paperwork Reduction Act of 1995, Public Law 104–13. An agency may not conduct or sponsor a collection of information unless it displays a currently valid control number. No person shall be subject to any penalty for failing to comply with a collection of information subject to the Paperwork Reduction Act (PRA) that does not display a valid control number. Comments are requested concerning (a) whether the proposed collection of information is necessary for the proper performance of the functions of the Commission, including whether the information shall have practical utility; (b) the accuracy of the Commission's burden estimate; (c) ways to enhance the quality, utility, and clarity of the information collected; and (d) ways to minimize the burden of the collection of information on the respondents, including the use of automated collection techniques or other forms of information technology.

DATES: Written comments should be submitted on or before November 24, 2000. If you anticipate that you will be submitting comments, but find it difficult to do so within the period of time allowed by this notice, you should advise the contact listed below as soon as possible.

ADDRESSES: Direct all comments to Les Smith, Federal Communications Commissions, 445 12th Street, S.W., Room 1–A804, Washington, DC 20554 or via the Internet to lesmith@fcc.gov.

FOR FURTHER INFORMATION CONTACT: For additional information or copies of the information collections contact Les Smith at (202) 418–0217 or via the Internet at lesmith@fcc.gov.

SUPPLEMENTARY INFORMATION:

OMB Number: 3060–XXXX.

Title: Section 79.2 Accessibility of Programming Providing Emergency Information.

Form Number: None.

Type of Review: Revision of currently approved collection.

Respondents: Business or other for-profit, Individuals or household, not-for-profit institutions, state, local or tribal government.

Number of Respondents: 100.

Estimated time per response: 1 hour per complainant, 2 hours per program provider.

Frequency of response: on occasion.

Total annual burden: 275 hours.

Total annual cost: $5,000.

Needs and Uses: On July 21, 2000, the Commission adopted a Report and Order in MM Docket No. 99–339 In the Matter of Implementation of Video Description of Video Programming. This Report and Order adopted video description rules to make television more accessible to persons with visual disabilities. Among other things, this Report and Order requires any broadcast station or multiple video programming distributor (MVPD) that provides local emergency information as part of a regularly scheduled newscast, or as part of a newscast that interrupts regularly scheduled programming, to make the critical details of the information accessible to persons with visual disabilities in the affected local area. In addition, any broadcast station or MVPD that provides emergency information through a crawl or scroll must accompany that information with an aural tone to alert persons with visual disabilities that the station or MVPD is providing this information.

Section 79.2(c) contains a complaint procedure. It requires that a complaint alleging a violation of this section may be transmitted to the Commission. The complaint should include the name of the video programming distributor against whom the complaint is alleged, the date and time of the omission of emergency information, and the type of emergency. The Commission will notify the video programming distributor of the complaint, and the distributor will reply to the complaint within 30 days.

OMB Approval Number: 3060–0192.

Title: Section 87.103 Posting station license.

Form No.: N/A.

Type of Review: Extension of existing collection.

Respondents: Businesses or other for-profit, individuals or households, state, local or tribal government, not-for-profit institutions.

Number of Respondents: 47,800.

Estimated Time Per Response: .25 hour per response.

Total Annual Burden: 11,950 hours.

Needs and Uses: The record keeping requirement contained in Section 87.103 is necessary to demonstrate that all transmitters in the Aviation Service are properly licensed in accordance with the requirements of Section 301 of the Communications Act of 1934, as amended, 47 U.S.C. 301, No. 2020 of the international Radio Regulations, and Article 30 of the Convention on International Civil Aviation. This requirement is necessary so that quick resolution of any harmful interference problems can be achieved and to ensure that the station is operating in accordance with the appropriate rules, statutes, and treaties.

OMB Control No.: 3060–0848.

Title: Deployment of Wireline Services Offering Advanced Telecommunications Capability, CC Docket No. 98–147.

Form No.: N/A.

Type of Review: Extension.

Respondents: Business or Other for Profit.

Number of Respondents: 1700.

Estimated Time Per Response: 95.76 hrs (avg.).

Total Annual Burden: 162,800.

Estimated Annual Reporting and Recordkeeping Cost Burden: $0.

Frequency of Response: On occasion; Third Party Disclosure.

Needs and Uses: The requirements contained in the Advanced Services First Report and Order and the Order on Reconsideration implement section 251(c)(6) of the Communications Act of 1934, as amended, which requires incumbent LECs to provide for collocation of equipment necessary for interconnection or access to unbundled network elements on terms and conditions that are just, reasonable and nondiscriminatory. The rules and requirements are intended to promote deployment of advanced services without significantly degrading the performance of other services. All the requirements will be used by the Commission and CLECs to facilitate the deployment of advanced data services.

Federal Communications Commission.

Magalie Roman Salas,

Secretary.

[FR Doc. 00–24539 Filed 9–22–00; 8:45 am]

BILLING CODE 6712–01–P

FEDERAL DEPOSIT INSURANCE CORPORATION

Agency Information Collection Activities: Submission for OMB Review; Comment Request

AGENCY: Federal Deposit Insurance Corporation (FDIC).

ACTION: Notice of information collection to be submitted to OMB for review and approval under the Paperwork Reduction Act of 1995.

SUMMARY: In accordance with requirements of the Paperwork Reduction Act of 1995 (44 U.S.C. 3501 *et seq.*), the FDIC hereby gives notice that it plans to submit to the Office of Management and Budget (OMB) a request for OMB review and approval of the information collection system described below.

Type of Review: Renewal of a currently approved collection.

Title: Appraisal Standards.

OMB Number: 3064–0103.

Annual Burden

Estimated annual number of respondents: 5,800.

Estimated number of responses: 328,600.

Estimated time per response 15 minutes.

Average annual burden hours 82,150 hours.

Expiration Date of OMB Clearance: October 31, 2000.

OMB Reviewer: Alexander T. Hunt, (202) 395–7860, Office of Management and Budget, Office of Information and Regulatory Affairs, Washington, D.C. 20503.

FDIC Contact: Tamara R. Manly, (202) 898–7453, Office of the Executive Secretary, Room F–4058, Federal Deposit Insurance Corporation, 550 17th Street N.W., Washington, D.C. 20429.

Comments: Comments on this collection of information are welcome and should be submitted on or before October 25, 2000 to both the OMB reviewer and the FDIC contact listed above.

ADDRESSES: Information about this submission, including copies of the proposed collection of information, may be obtained by calling or writing the FDIC contact listed above.

SUPPLEMENTARY INFORMATION: FIRREA directs the FDIC to prescribe appropriate standards for the performance of real estate appraisals in connection with Federally related transactions under its jurisdiction. The information collection activities attributable to 12 CFR Part 323 are a direct consequence of the statutory requirements and the legislative intent.

Dated: September 19, 2000.

Federal Deposit Insurance Corporation.

Robert E. Feldman,

Executive Secretary.

[FR Doc. 00–24552 Filed 9–22–00; 8:45 am]

BILLING CODE 6714–01–P

FEDERAL DEPOSIT INSURANCE CORPORATION

Sunshine Act Meeting; Notice of Agency Meeting

Pursuant to the provisions of the ''Government in the Sunshine Act'' (5 U.S.C. 552b), notice is hereby given that at 2:30 p.m. on Monday, September 25, 2000, the Federal Deposit Insurance Corporation's Board of Directors will meet in closed session, pursuant to sections 552b(c)(2), (c)(6), (c)(8), (c)(9)(A)(ii), and (c)(9)(B) of Title 5, United States Code, to consider matters relating to the Corporation's personnel, resolution, supervisory, and corporate activities.

The meeting will be held in the Board Room on the sixth floor of the FDIC Building located at 550—17th Street, N.W., Washington, D.C.

Requests for further information concerning the meeting may be directed to Mr. Robert E. Feldman, Executive Secretary of the Corporation, at (202) 898–6757.

Dated: September 21, 2000.

Federal Deposit Insurance Corporation.

Robert E. Feldman,

Executive Secretary.

[FR Doc. 00–24653 Filed 9–21–00; 1:53 pm]

BILLING CODE 6714–01–M

FEDERAL HOUSING FINANCE BOARD

Sunshine Act Meeting

Federal Register *Citation of Previous Notice;* 65 FR 55980, September 15, 2000.

PREVIOUSLY ANNOUNCED TIME AND DATE OF THE MEETING: 2:00 p.m., Tuesday, September 19, 2000.

CHANGE IN THE MEETING: THE FOLLOWING TOPIC WAS ADDED TO THE OPEN PORTION OF THE MEETING:

- Extension of the Comment Period for the Proposed Capital Regulation.

The Board determined that agency business required the addition of this item on less than seven days notice to the public and that on earlier notice of this change in the subject matter of the matter was practicable.

CONTACT PERSON FOR MORE INFORMATION: Elaine L. Baker, Secretary to the Board, (202) 408–2837.

James L. Bothwell,

Managing Director.

[FR Doc. 00–24618 Filed 9–20–00; 4:57 pm]

BILLING CODE 6725–01–P

FEDERAL TRADE COMMISSION

Agency Information Collection Activities; Submission for OMB Review; Comment Request

AGENCY: Federal Trade Commission.

ACTION: Notice.

SUMMARY: The Federal Trade Commission (FTC) has submitted to the Office of Management and Budget (OMB) for review proposed additions to an OMB clearance for FTC administrative activities. The FTC seeks public comments regarding the additions and this notice, which is the second of two notices required by the PRA for information collection requests of this nature. The proposed additions consist of telephone complaint hotlines through which staff collects information from callers, three consumer complaint forms, and a survey to be used to evaluate the effectiveness of the FTC's complaint handling system.

DATES: Comments must be submitted on or before October 25, 2000.

ADDRESSES: Send written comments to the Office of Information and Regulatory Affairs, Office of Management and Budget, New Executive Office Building, Room 10202, Washington, DC 20503, ATTN.: Desk Officer for the Federal Trade Commission, and to Secretary, Federal Trade Commission, Room H–159, 600 Pennsylvania Avenue, NW., Washington, DC 20580 (or by e-mail to *frnotice0047@ftc.gov*). The submissions should include the submitter's name, address, telephone number and, if available, FAX number and e-mail address. All submissions should be captioned ''PRA/Consumer Complaint system.'' All comments should be identified as responding to this notice.

FOR FURTHER INFORMATION CONTACT: Requests for additional information or copies of the proposed survey questions should be addressed to Joseph Brooke, Division of Planning and Information, Bureau of Consumer Protection, Federal Trade Commission, 600 Pennsylvania Avenue, NW., H–292, Washington, DC 20580, (202) 326–3484. The consumer complaint forms may be found at the following websites: https://www.ftc.gov/ftc/complaint.htm (general complaint form); https://www.ftc.gov/ftc/knowfraudcomplaint.htm (fraud complaints); and https://www.ftc.gov/ftc/idtheftform.htm (identity theft).

SUPPLEMENTARY INFORMATION: Under section 3507(h)(3) of the PRA, 44 U.S.C. 3501–3520, a Federal agency may not materially change an approved collection of information [1] unless OMB has approved the modification. OMB previously granted approval for various collections of information grouped under the category ''FTC Administrative Activities'' (OMB Control Number 3084–0047) on August 16, 1999. This category consists of applications to the FTC, including those pertaining to its Rules of Practice, primarily those under Parts 1, 2, and 4 of CFR Title 16. On July 12, 2000, OMB granted an expedited provisional clearance for the FTC's collections of information associated with its telephone complaint hotlines, customer complaint forms (providing alternative access to the CRC), and a customer satisfaction survey and, under 5 CFR 1320.13(d), waived the requirement to publish a notice of the emergency clearance request.

On July 19, 2000, the FTC published a **Federal Register** notice with a 60-day comment period soliciting comments from the public concerning the proposed collections of information (65 FR 44788). No comments were received.

Description of the Collection of Information and Proposed Use

The forms and survey are designed to improve public access to the Bureau of Consumer Protection's (BCP) Consumer Response Center (CRC), and are voluntary. Consumers may call a hotline phone number or may log on to the FTC's website to register a complaint using the applicable complaint form. There are three different consumer complaint forms: (1) The general www.ftc.gov complaint form (for other than identity theft complaints); (2) the www.consumer.gov ''Know Fraud'' complaint form (essentially another way to access complaint form #1); and (3) the ''Identity Theft On-Line Complaint Form.''

General and Fraud Complaint Systems

Telephone complaints and inquiries to the FTC are answered both by FTC staff and offsite contractor. Telephone counselors ask for the same information that consumers would enter on the applicable online form. For the general complaint and fraud systems, BCP has set a target time of 4.5 minutes per call to gather information, somewhat less time than it estimates for consumers to enter their complaints online.[2] This target was determined by the BCP's standard telemarketing best practices for consumer calls. Frequently, a small part of these incoming calls is devoted to the agency's providing information to consumers, not collecting information. The burden estimate conservatively assumes that all of the estimated time is devoted to collecting information from consumers.

Identity Theft

To handle complaints about identity theft, the FTC must obtain more detailed information than is required of other complainants. BCP designed the online identity theft form to be as short as practicable, seeking only the minimum information needed for initial evaluation and potential follow up. Obtaining further information through the initial consumer contact was dropped as unwieldy. With call-ins, however, staff and the contractor seek to obtain more detailed and comprehensive information up front to minimize the need for follow up calls.

Since investigating identity theft requires more information (*e.g.,* credit history, credit bureau information, respondent social security number, identifying multiple suspects) than general consumer complaints and complaints about fraud, identity theft calls and online entries take longer. However, a substantial portion of identity theft-related calls (approximately 4 minutes per call) typically consists of counseling consumers on other steps they should

[1] ''Collection of information'' includes agency requests for answers to identical questions from ten or more persons (extending beyond mere identification of the respondent). See 44 U.S.C. 3502(3); 5 CFR 1320.3(c), 5 CFR 1320.3(h)(1).

[2] Because the fraud-related form is closely patterned after the general complaint form, burden estimates per respondent for each are the same.

consider taking to obtain relief. Because this activity is different in nature and degree than the incidental provision of information in other types of fraud complaints, staff excludes it with regard to identity theft-related calls.

Customer Satisfaction Survey

The customer satisfaction survey would collect information concerning the overall effectiveness and timeless of the CRC. The CRC will survey roughly 2 percent of complainants. Subsets of consumers who have contacted staff throughout the year will be questioned about specific aspects of CRC customer service.

Each consumer surveyed would be asked 8–10 questions chosen from the list noted above. Half of the questions would ask consumers to rate CRC performance on a scale or call for yes or no repsonses. The second half of the survey wold ask more open-ended questions seeking a short written or verbal answer. BCP staff estimates that each respondent will require four minutes to answer the questions (approximately 20–30 seconds per question).

What follows are staff's estimates of burden for these various collections of information, including the questionnaire. The figures for the online forms and consumer hotlines are an average of annualized volume-to-date for the respective programs and projected volume for the next two years (the period of the existing clearance for FTC administrative activities), and are rounded to the nearest thousand.

Annual hours burden:

Activity	Number of respondents	Number minutes/ activity	Total hours
Miscell, and fraud-related consumer complaints (phone)	300,000	4.5	23,000
Miscell, and fraud-related consumer complaints (online)	35,000	5.0	3,000
IDT complaints (phone)	90,000	8	12,000
IDT complaints (online)	26,000	7.5	3,000
Customer Satisfaction Questionaire	9,000	4.0	600
Total	460,000	.....	41,600

Annual cost burden:

The cost per respondent should be negligible. Participation is voluntary, and will not require any labor expenditures by respondents. There are no capital, start-up, operation, maintenance, or other similar costs to the respondents.

Debra A. Valentine,

General Counsel.

[FR Doc. 00–24534 Filed 9–22–00; 8:45 am]

BILLING CODE 6750–01–M

DEPARTMENT OF HEALTH AND HUMAN SERVICES

Office of the Secretary

Office of Minority Health; Notice of a Cooperative Agreement With the Association of Asian and Pacific Community Health Organizations

AGENCY: Office of the Secretary, Office of Minority Health, HHS.

ACTION: Notice of a Single Source Cooperative Agreement with the Association of Asian and Pacific Community Health Organizations.

Program Title

Cooperative Agreement to Improve the Health Status of Minority Populations.

OMB Catalog of Federal Domestic Assistance: The Catalog of Federal Domestic Assistance number for this cooperative agreement is 93.004.

Authority: This cooperative agreement is authorized under section 1707 (e)(1) of the Public Health Service Act, as amended.

The Office of Minority Health (OMH), Office of Public Health and Science, announces it is continuing to support a single source umbrella cooperative agreement with the Association of Asian and Pacific Community Health Organizations (AAPCHO) for it to expand and enhance its activities in health promotion, disease prevention, and health service research and the development of models to improve primary care service delivery. This cooperative agreement will continue the broad programmatic framework in which specific projects can be supported by various governmental agencies to carry out the ultimate goal of improving the health status and access to care for minorities and disadvantaged people, especially the underserved.

The OMH expects substantial programmatic involvement in this project with AAPCHO to assist in identifying health-related information for dissemination in the Asian American and Pacific Islander (AAPI) populations, particularly in rural and isolated AAPI communities; linking emerging AAPI communities to technical assistance and resource opportunities available on a national basis; identifying HHS programs that involve clinical trials and research studies to increase the involvement of AAPIs; identifying candidates for advisory panels and developing selection criteria; and arranging consultation with other government and non-government agencies relative to activities that affect policies and programs within AAPI communities.

This cooperative agreement will be continued for an additional 5-year project period with 12-month budget periods. Depending upon the types of projects and availability of funds, it is anticipated that this cooperative agreement will receive approximately $100,000 per year. Continuation awards within the project period will be made on the basis of satisfactory progress and the availability of funds.

During the last 5 years, AAPCHO has successfully demonstrated the ability to work with its organizational membership and health agencies on mutual education, service, and research endeavors. The OMH believes AAPCHO is uniquely qualified to accomplish the purpose of this cooperative agreement and that no organization other than AAPCHO could fulfill the program objectives for the reasons cited below. It has:

- Established a web site which promotes resources and current culturally and linguistically appropriate materials to AAPI health care providers and provides linkages with emerging AAPI communities to appropriate health care services and materials.
- Promoted health care access to rural and isolated AAPI communities, including emerging communities, specifically in the West and MidWest, and has extensive experience in addressing the health needs of these communities.

• Developed the capacity to provide technical assistance to AAPI community groups on organizational and communication infrastructure development and how to access health and health services programs.

• Developed a strategy to raise awareness in AAPI communities for assuring AAPI representation in clinical trials and research activities.

• A network of community health centers that provides a foundation upon which it develops, promotes, and manages health intervention, education, and training programs which are aimed at preventing and reducing morbidity and mortality among AAPIs.

• An extensive knowledge-base of essential health services, health care accessibility issues, and professional development initiatives that deal exclusively with AAPI populations, attributes that are necessary for effective intervention with this population group.

Where To Obtain Additional Information

If you are interested in obtaining additional information regarding this cooperative agreement, contact Ms. Cynthia Amis, Office of Minority Health, 5515 Security Lane, Suite 1000, Rockville, Maryland 20852 or telephone (301) 594–0769.

Dated: September 12, 2000.

Nathan Stinson Jr.,

Deputy Assistant Secretary for Minority Health.

[FR Doc. 00–24549 Filed 9–22–00; 8:45 am]

BILLING CODE 4160–17–P

DEPARTMENT OF HEALTH AND HUMAN SERVICES

Centers for Disease Control and Prevention

[60Day–00–51]

Proposed Data Collections Submitted for Public Comment and Recommendations

In compliance with the requirement of Section 3506 (c) (2) (A) of the Paperwork Reduction Act of 1995, the Centers for Disease Control and Prevention (CDC) is providing an opportunity for public comment on proposed data collection projects. To request more information on the proposed projects or to obtain a copy of the data collection plans and instruments, call the CDC Assistant Reports Clearance Officer at 404–639–7090.

Comments are invited on: (i) Whether the proposed collection of information is necessary for the proper performance of the functions of the CDC, including whether the information shall have a practical utility; (ii) the accuracy of the agency's estimate of the burden of the proposed collection of information; (iii) ways to enhance the quality, utility, and clarity of the information to be collected; and (iv) ways to minimize the burden of the collection of information on respondents, including the use of automated collection techniques or other forms of information technology. Send comments to Seleda M. Perryman, CDC Assistant Reports Clearance Officer, 1600 Clifton Road, MS–D24, Atlanta, Georgia 30333. Written comments should be received within 60 days of this notice.

Proposed Project

Travelers' Health Survey—New—National Center for Infectious Diseases (NCID). Approximately 50 million Americans travel abroad each year and more than 25 million of these travel to rural areas or developing countries where the risk is greater for contracting infectious diseases. Many of these diseases are preventable through vaccines, drugs, and other preventive measures. According to surveillance data from the CDC, over 99 percent of malaria, 72 percent of typhoid, and 7 percent of hepatitis A cases in the U.S. are acquired abroad. Information on preventing illness during travel is available free or at little cost through public health departments, a CDC toll-free fax system, and the Internet. However, many travelers may be unaware of the health risks they face when traveling because they either lack access to pretravel health services or do not understand the measures necessary to avoid health risks. Evidence shows first-and second-generation U.S. immigrant travelers, when traveling to their countries of origin to visit friends and relatives, may be at greater risk than the general public, for contracting infectious diseases.

The objectives of this project are to determine (i) whether travelers seek pretravel health information, (ii) where they access this information, (iii) travelers' baseline knowledge of prevention measures for diseases commonly associated with travel, and (iv) whether specific groups of travelers (*i.e.* first-and second-generation immigrants) lack information on or access to pretravel health recommendations and services. To accomplish these objectives, in partnership with Delta Airlines, CDC proposes to conduct voluntary, self-administered, anonymous, in-flight surveys of U.S. citizens and residents traveling abroad to areas where malaria, typhoid fever, and hepatitis A are endemic.

This preliminary project will focus on first-and second-generation U.S. immigrants from India visiting friends and relatives in India, where all three diseases are endemic. A study period of 2 to 3 months is estimated. Data from this project will fulfill Healthy People 2010 objectives for travelers. In addition, it will enable CDC to develop appropriate educational interventions for high-risk travelers and to gain a better understanding of the role of travel in emerging infectious diseases. The survey tool will take approximately 15 minutes to complete.

There are no costs to respondents, only the time it takes to complete the survey.

Number of respondents	Number of responses/ respondent	Average burden/ response (in hours)	Total burden hours
5,600	1	16/16	1,400

Dated: September 19, 2000.

Nancy Cheal,

Acting Associate Director for Policy Planning, and Evaluation, Centers for Disease Control and Prevention (CDC).

[FR Doc. 00–24531 Filed 9–22–00; 8:45 am]

BILLING CODE 4163–18–P

DEPARTMENT OF HEALTH AND HUMAN SERVICES

Centers for Disease Control and Prevention

[30DAY–72–00]

Agency Forms Undergoing Paperwork Reduction Act Review

The Centers for Disease Control and Prevention (CDC) publishes a list of information collection requests under review by the Office of Management and Budget (OMB) in compliance with the Paperwork Reduction Act (44 U.S.C. Chapter 35). To request a copy of these requests, call the CDC Reports Clearance Officer at (404) 639–7090. Send written comments to CDC, Desk Officer; Human Resources and Housing Branch, New Executive Office Building, Room 10235; Washington, DC 20503. Written comments should be received within 30 days of this notice.

Proposed Project

Exposure to Aerosolized Brevetoxins During Red Tide Events—New—National Center for Environmental Health (NCEH). *Gymnodinium breve* is the marine dinoflagellate responsible for extensive blooms (called red tides) that form in the Gulf of Mexico. G. *breve* produces potent toxins, called brevetoxins, that have been responsible for killing millions of fish and other marine organisms. The biochemical activity of brevetoxins is not completely understood and there is very little information regarding human health effects from environmental exposures, such as inhaling brevetoxin that has been aerosolized and swept onto the coast by offshore winds. The National Center for Environmental Health (NCEH), Centers for Disease Control and Prevention (CDC) is planning to recruit 100 people who work along the coast of Florida and who potentially will be occupationally exposed to aerosolized red tide toxins some time during the year following recruitment.

NCEH plans on administering a base line respiratory health questionnaire and conducting pre- and post-shift pulmonary function tests during a time when there is no red tide reported near the area. When a red tide develops, we plan to administer a symptom survey and conduct pulmonary function testing (PFT) on a group of study participants who are working in the area where the red tide is near shore, and on a control group of study participants who are not working in an area where the red tide is near shore (*i.e.*, are not exposed to the red tide). We will then compare (1) symptom reports before and during the red tide and (2) the changes in baseline PFT values during the work shift (differences between pre- and post-shift PFT results without exposure to red tide) with the changes in PFT values during the work shift when individuals are exposed to red tide. In addition, we plan to assist in collecting biological specimens (inflammatory cells from nose and throat swabs) to assess whether they can be used to verify exposure and to demonstrate a biological effect (*i.e.,* inflammatory response) from exposure to red tide. There are no costs to respondents. The total burden is estimated to be 201 hours.

Respondents	Number of respondents	Number of responses per respondent	Average burden per response (in hrs.)
Pulmonary History Questionnaire	100	1	20/60
Symptom Questionnaire	100	20	5/60

Dated: September 19, 2000.

Nancy Cheal,

Acting Associate Director for Policy, Planning, and Evaluation, Centers for Disease Control and Prevention (CDC).

[FR Doc. 00–24530 Filed 9–22–00; 8:45 am]

BILLING CODE 4163–18–P

DEPARTMENT OF HEALTH AND HUMAN SERVICES

Centers for Disease Control and Prevention

Advisory Committee on Immunization Practices: Meeting

In accordance with section 10(a)(2) of the Federal Advisory Committee Act (P.L. 92–463), the Centers for Disease Control and Prevention (CDC) announces the following committee meeting:

Name: Advisory Committee on Immunization Practices (ACIP) Teleconference.

Time and Date: 3:15 p.m.–5 p.m., September 28, 2000.

Place: Teleconference call will originate at the Centers for Disease Control and Prevention in Atlanta, Georgia. Please see ''Supplementary Information'' for details on accessing the teleconference.

Status: Open to the public, teleconference access limited only by availability of telephone ports.

Purpose: The Committee is charged with advising the Director, CDC, on the appropriate uses of immunizing agents. In addition, under 42 U.S.C. § 1396s, the Committee is mandated to establish and periodically review and, as appropriate, revise the list of vaccines for administration to vaccine-eligible children through the Vaccines for Children (VFC) program, along with schedules regarding the appropriate periodicity, dosage, and contraindications applicable to the vaccines.

Matters to be Discussed: The teleconference agenda will include a discussion of influenza vaccine recommendations for the 2000–2001 influenza season. Discussion will include priority groups for vaccination, implementation measures, and strategies for promoting vaccine delivery later in the influenza season.

Agenda items are subject to change as priorities dictate.

SUPPLEMENTARY INFORMATION: This conference call is scheduled for 3:15 p.m. Eastern Standard Time. To access the teleconference you must dial 1/888/381–5770 and enter conference code 53651. You will then be automatically connected to the call. It is necessary to meet on an expedited basis, to refine vaccine recommendations prior to the influenza season. Therefore, notice is published less than 15 days prior to the teleconference.

CONTACT PERSON FOR MORE INFORMATION: Gloria A. Kovach, Program Analyst, Epidemiology and Surveillance Division, National Immunization Program, CDC, 1600 Clifton Road, NE, m/s E61, Atlanta, Georgia 30333. Telephone 404/639–8096. The Director, Management Analysis and Services office has been delegated the authority to sign **Federal Register** notices pertaining to announcements of meetings and other committee management activities for both the

Centers for Disease Control and Prevention and the Agency for Toxic Substances and Disease Registry.

Dated: September 20, 2000.

Carolyn J. Russell,

Director, Management Analysis and Services Office, Centers for Disease Control and Prevention.

[FR Doc. 00–24622 Filed 9–22–00; 8:45 am]

BILLING CODE 4163–18–P

DEPARTMENT OF HEALTH AND HUMAN SERVICES

Food and Drug Administration

[Docket No. 00N–1502]

Agency Information Collection Activities: Proposed Collection; Comment Request; Adverse Experience Reporting for Licensed Biological Products; and General Records

AGENCY: Food and Drug Administration, HHS.

ACTION: Notice.

SUMMARY: The Food and Drug Administration (FDA) is announcing an opportunity for public comment on the proposed collection of certain information by the agency. Under the Paperwork Reduction Act of 1995 (the PRA), Federal agencies are required to publish notice in the **Federal Register** concerning each proposed collection of information, including each proposed extension of an existing collection of information, and to allow 60 days for public comment in response to the notice. This notice solicits comments on the information collection requirements relating to FDA's adverse experience reporting (AER) for licensed biological products, and general records associated with the manufacture and distribution of biological products.

DATES: Submit written or electronic comments on the collection of information by November 24, 2000.

ADDRESSES: Submit electronic comments on the collection of information via the Internet at: http://www.accessdata.fda.gov/scripts/oc/dockets/comments/commentdocket.cfm. Submit written comments on the collection of information to the Dockets Management Branch (HFA–305), Food and Drug Administration, 5630 Fishers Lane, rm. 1061, Rockville, MD 20852. All documents should be identified with the docket number found in brackets in the heading of this document.

FOR FURTHER INFORMATION CONTACT: JonnaLynn P. Capezzuto, Office of Information Resources Management (HFA–250), Food and Drug Administration, 5600 Fishers Lane, Rockville, MD 20857, 301–827–4659.

SUPPLEMENTARY INFORMATION: Under the PRA (44 U.S.C. 3501–3520), Federal agencies must obtain approval from the Office of Management and Budget (OMB) for each collection of information they conduct or sponsor. ''Collection of information'' is defined in 44 U.S.C. 3502(3) and 5 CFR 1320.3(c) and includes agency request or requirements that members of the public submit reports, keep records, or provide information to a third party. Section 3506(c)(2)(A) of the PRA (44 U.S.C. 3506(c)(2)(A)) requires Federal agencies to provide a 60-day notice in the **Federal Register** concerning each proposed collection of information, including each proposed extension of an existing collection of information, before submitting the collection to OMB for approval. To comply with this requirement, FDA is publishing notice of the proposed collection of information set forth in this document.

With respect to the following collection of information, FDA invites comments on: (1) Whether the proposed collection of information is necessary for the proper performance of FDA's functions, including whether the information will have practical utility; (2) the accuracy of FDA's estimate of the burden of the proposed collection of information, including the validity of the methodology and assumptions used; (3) ways to enhance the quality, utility, and clarity of the information to be collected; and (4) ways to minimize the burden of the collection of information on respondents, including through the use of automated collection techniques when appropriate, and other forms of information technology.

Adverse Experience Reporting for Licensed Biological Products; and General Records—21 CFR 600.12 and Part 600 Subpart D (OMB Control Number 0910–0308)—Extension

Under the Public Health Service Act (42 U.S.C. 262), FDA is required to ensure the marketing of only those biological products which are safe and effective. FDA must therefore be informed of all adverse experiences occasioned by the use of licensed biological products. FDA issued the adverse experience reporting requirements to enable FDA to take actions necessary for the protection of the public health in response to reports of adverse experiences related to licensed biological products. The primary purpose of FDA's adverse experience reporting system is to flag potentially serious safety problems with licensed biological products, focusing especially on newly licensed products. Although premarket testing discloses a general safety profile of a new drug's comparatively common adverse effects, the larger and more diverse patient populations exposed to the licensed biological product provides the opportunity to collect information on rare, latent, and long-term effects. Reports are obtained from a variety of sources, including patients, physicians, foreign regulatory agencies, and clinical investigators. Information derived from the adverse experience reporting system contributes directly to increased public health protection because such information enables FDA to recommend important changes to the product's labeling (such as adding a new warning), to initiate removal of a biological product from the market when necessary, and to assure the manufacturer has taken adequate corrective action if necessary.

Section 600.80(c)(1) (21 CFR 600.80(c)(1)), requires the licensed manufacturer to report each adverse experience that is both serious and unexpected, regardless of source, as soon as possible but in any case within 15 working days of initial receipt of the information. Section 600.80(e) requires licensed manufacturers to submit a 15-day alert report obtained from a postmarketing clinical study only if there is a reasonable possibility that the product caused the adverse experience. Section 600.80(c)(2) requires the licensed manufacturer to report each adverse experience not reported under paragraph (c)(1) at quarterly intervals, for 3 years from the date of issuance of the product license, and then at annual intervals. The majority of the periodic reports will be submitted annually since a large percentage of the current licensed biological products have been licensed longer than 3 years. Section 600.80(i) requires the licensed manufacturer to maintain for a period of 10 years records of all adverse experiences known to the licensed manufacturer, including raw data and any correspondence relating to the adverse experiences. Section 600.81 (21 CFR 600.81) requires the licensed manufacturer to submit information about the quantity of the product distributed under the product license, including the quantity distributed to distributors at an interval of every 6 months. The semiannual distribution report informs FDA of the quantity, the lot number, and the dosage of different products. Section 600.90 (21 CFR

600.90) requires a licensed manufacturer to submit a waiver request with supporting documentation when asking for waiving the requirement that applies to them under §§ 600.80 and 600.81.

Manufacturers of biological products for human use must keep records of each step in the manufacture and distribution of products including recalls of the product. The recordkeeping requirements serve preventative and remedial purposes. These requirements establish accountability and traceability in the manufacture and distribution of products, and enable FDA to perform meaningful inspections.

Section 600.12 (21 CFR 600.12) requires that all records of each step in the manufacture and distribution of a product be made and retained for no less than 5 years after the records of manufacture have been completed or 6 months after the latest expiration date for the individual product, whichever represents a later date. In addition, records of sterilization of equipment and supplies, animal necropsy records, and records in cases of divided manufacturing of a product are required to be maintained. Section 600.12(b)(2) requires complete records to be maintained pertaining to the recall from distribution of any product.

Respondents to this information collection are manufacturers of biological products. In fiscal year (FY) 99 there were approximately 79 licensed manufacturers. This number excludes those manufacturers who produce blood and blood components and in-vitro diagnostic licensed products because they are specifically exempt from the regulations. However, not all manufacturers may have any submissions in a given year and some may have multiple submissions. FDA received four waiver requests under § 600.90, of which one was approved for exemption of the AER requirements. In FY 99, there were an estimated 3,662 15-day alert reports, 13,238 periodic reports, and 502 distribution reports submitted to FDA. The number of 15-day alert reports for postmarketing studies as stated in § 600.80(e) was minimal and is included in the total number of 15-day alert reports. The hours per response are based on FDA experience. The burden hours required to complete the MedWatch Form for § 600.80(c)(1), (e), and (f) are reported under OMB Control No. 0910–0291. FDA estimates the burden of this information collection as follows:

TABLE 1.—ESTIMATED ANNUAL REPORTING BURDEN[1]

21 CFR section	Number of respondents	Annual frequency per response	Total annual responses	Hours per response	Total hours
600.80(c)(1) and (e)	78	46.95	3,662	1	3,662
600.80(c)(2)	78	169.72	13,238	1	13,238
600.81	78	6.44	502	1	502
600.90	4	1	4	1	4
Total					17,407

[1]There are no captital costs or operating and maintenance costs associated with this collection of information.

There are approximately 343 licensed manufacturers of biological products. However, the number of recordkeepers listed for § 600.12(a) through (e) excluding paragraph (b)(2) is estimated to be 111. This number excludes manufacturers of blood and blood components, because their burden hours for recordkeeping have been reported under § 606.160 in OMB Control No. 0910–0116. The recordkeeping burden is based on the number of lots released (6,446), the number of recalls made (1,176) and the total number of AER reports received (16,900) for FY 99. The hours per record are based on FDA experience.

FDA estimates the burden of this recordkeeping as follows:

TABLE 2.—ESTIMATED ANNUAL RECORDKEEPING BURDEN[1]

21 CFR section	Number of recordkeepers	Annual frequency of recordkeeping	Total annual records	Hours per record	Total hours
600.12	111	58.1	6,446	32	206,272
600.12(b)(2)	343	3.4	1,176	24	28,224
600.80(i)	79	213.92	16,900	1	16,900
Total					251,396

[1]There are no capital costs or operating and maintenance costs associated with this collection of information.

Dated: September 19, 2000.

William K. Hubbard,

Senior Associate Commissioner for Policy, Planning, and Legislation.

[FR Doc. 00–24477 Filed 9–22–00; 8:45 am]

BILLING CODE 4160–01–F

DEPARTMENT OF HEALTH AND HUMAN SERVICES

Food and Drug Administration

[Docket No. 97N–0472]

Agency Information Collection Activities; Proposed Collection; Comment Request; Petition for Administrative Stay of Action

AGENCY: Food and Drug Administration, HHS.

ACTION: Notice.

SUMMARY: The Food and Drug Administration (FDA) is announcing an opportunity for public comment on the proposed collection of certain information by the agency. Under the Paperwork Reduction Act of 1995 (the PRA), Federal agencies are required to publish notice in the **Federal Register** concerning each proposed collection of information, including each proposed extension of an existing collection of information, and to allow 60 days for public comment in response to the notice. This notice solicits comments on requirements for filing a petition for administrative stay of action.

DATES: Submit written or electronic comments on the collection of information by November 24, 2000.

ADDRESSES: Submit electronic comments on the collection of information to http://www.accessdata.fda.gov/scripts/oc/dockets/edockethome.cfm. Submit written comments on the collection of information to the Dockets Management Branch (HFA–305), Food and Drug Administration, 5630 Fishers Lane, rm. 1061, Rockville, MD 20852. All comments should be identified with the docket number found in brackets in the heading of this document.

FOR FURTHER INFORMATION CONTACT: JonnaLynn P. Capezzuto, Office of Information Resources Management (HFA–250), Food and Drug Administration, 5600 Fishers Lane, Rockville, MD 20857, 301–827–4659.

SUPPLEMENTARY INFORMATION: Under the PRA (44 U.S.C. 3501093520), Federal agencies must obtain approval from the Office of Management and Budget (OMB) for each collection of information they conduct or sponsor. ''Collection of information'' is defined in 44 U.S.C. 3502(3) and 5 CFR 1320.3(c) and includes agency requests or requirements that members of the public submit reports, keep records, or provide information to a third party. Section 3506(c)(2)(A) of the PRA (44 U.S.C. 3506(c)(2)(A)) requires Federal agencies to provide a 60-day notice in the **Federal Register** concerning each proposed collection of information, including each proposed extension of an existing collection of information, before submitting the collection to OMB for approval. To comply with this requirement, FDA is publishing notice of the proposed collection of information set forth in this document.

With respect to the following collection of information, FDA invites comments on: (1) Whether the proposed collection of information is necessary for the proper performance of FDA's functions, including whether the information will have practical utility; (2) the accuracy of FDA's estimate of the burden of the proposed collection of information, including the validity of the methodology and assumptions used; (3) ways to enhance the quality, utility, and clarity of the information to be collected; and (4) ways to minimize the burden of the collection of information on respondents, including through the use of automated collection techniques, when appropriate, and other forms of information technology.

Petition for Administrative Stay of Action—21 CFR 10.35 (OMB Control Number 0910–0194)—Reinstatement)—Extension

The regulations in 21 CFR 10.35, issued under the authority of section 701(a) of the Federal Food, Drug, and Cosmetic Act (21 U.S.C. 371(a)), set forth the format and procedures by which an interested person may file a petition for an administrative stay of action.

Respondents to this information collection are interested persons who choose to file a petition for an administrative stay of action. Such a petition must: (1) Identify the decision involved; (2) state the action requested, including the length of time for which a stay is requested; and (3) include a statement of the factual and legal grounds on which the interested person relies in seeking the stay. The information provided in the petition is used by the agency to determine whether the requested stay should be granted.

FDA estimates the burden of this collection of information as follows:

TABLE 1.—ESTIMATED ANNUAL REPORTING BURDEN [1]

21 CFR section	No. of respondents	Annual frequency per response	Total annual responses	Hours per response	Total hours
10.35	13	1	13	10	130

[1] There are no capital costs or operating and maintenance costs associated with this collection of information.

The burden estimate for this collection of information is based on FDA's experience with petitions for administrative stay of action over the past 3 years. Agency personnel responsible for processing the filing of petitions for administrative stays of action estimate that 13 such petitions are received by the agency annually, with each requiring approximately 10 hours of preparation time.

Dated: September 19, 2000.

William K. Hubbard,

Senior Associate Commissioner for Policy, Planning, and Legislation.

[FR Doc. 00–24537 Filed 9–22–00; 8:45 am]

BILLING CODE 4160–01–F

DEPARTMENT OF HEALTH AND HUMAN SERVICES

Food and Drug Administration

[Docket No. 00N–1511]

Agency Information Collection Activities; Proposed Collection; Comment Request; Petition for Administrative Reconsideration of Action

AGENCY: Food and Drug Administration, HHS.

ACTION: Notice.

SUMMARY: The Food and Drug Administration (FDA) is announcing an opportunity for public comment on the proposed collection of certain information by the agency. Under the Paperwork Reduction Act of 1995 (the PRA), Federal agencies are required to publish notice in the **Federal Register** concerning each proposed collection of information, including each proposed extension of an existing collection of information, and to allow 60 days for public comment in response to the notice. This notice solicits comments on requirements for parties filing a petition for administrative reconsideration of an action.

DATES: Submit written or electronic comments on the collection of information by November 24, 2000.

ADDRESSES: Submit electronic comments on the collection of information to http://www.accessdata.fda.gov/scripts/oc/dockets/edockethome.cfm. Submit written comments on the collection of information to the Dockets Management Branch (HFA–305), Food and Drug Administration, 5630 Fishers Lane, rm. 1061, Rockville, MD 20852. All comments should be identified with the docket number found in brackets in the heading of this document.

FOR FURTHER INFORMATION CONTACT: JonnaLynn P. Capezzuto, Office of Information Resources Management (HFA–250), Food and Drug Administration, 5600 Fishers Lane, Rockville, MD 20857, 301–827–4659.

SUPPLEMENTARY INFORMATION: Under the PRA (44 U.S.C. 3501–3520), Federal agencies must obtain approval from the Office of Management and Budget (OMB) for each collection of information they conduct or sponsor. ''Collection of information'' is defined in 44 U.S.C. 3502(3) and 5 CFR 1320.3(c) and includes agency requests or requirements that members of the public submit reports, keep records, or provide information to a third party. Section 3506(c)(2)(A) of the PRA (44 U.S.C. 3506(c)(2)(A)) requires Federal agencies to provide a 60-day notice in the **Federal Register** concerning each proposed collection of information, including each proposed extension of a collection of information, before submitting the collection to OMB for approval. To comply with this requirement, FDA is publishing notice of the proposed collection of information set forth in this document.

With respect to the following collection of information, FDA invites comments on: (1) Whether the proposed collection of information is necessary for the proper performance of FDA's functions, including whether the information will have practical utility; (2) the accuracy of FDA's estimate of the burden of the proposed collection of information, including the validity of the methodology and assumptions used; (3) ways to enhance the quality, utility, and clarity of the information to be collected; and (4) ways to minimize the burden of the collection of information on respondents, including through the use of automated collection techniques, when appropriate, and other forms of information technology.

Petition for Administrative Reconsideration of Action—21 CFR 10.33 (OMB Control Number 0910–0192)—Extension

The regulations in 21 CFR 10.33, issued under section 701(a) of the Federal Food, Drug, and Cosmetic Act (21 U.S.C. 371(a)), set forth the format and procedures by which an interested person may petition the Commissioner of Food and Drugs (the Commissioner) for reconsideration of an agency action. A petition for reconsideration must contain a full statement in a well-organized format of the factual and legal grounds upon which the petition relies. The grounds must demonstrate that relevant information and views contained in the administrative record were not previously or adequately considered by the Commissioner. Each petition must be submitted no later than 30 days after the decision involved. The Commissioner may, for good cause, permit a petition to be filed after 30 days. An interested person who wishes to rely on information or views not included in the administrative record shall submit them with a new petition to modify the decision. FDA uses the information provided to determine whether to grant the petition for reconsideration. Respondents to this collection of information are individuals of households, State or local governments, not-for-profit institutions, and businesses or other for-profit institutions.

FDA estimates the burden of this collection of information as follows:

TABLE 1.—ESTIMATED ANNUAL REPORTING BURDEN[1]

21 CFR section	Number of respondents	Annual frequency per response	Total annual responses	Hours per response	Total hours
10.33(b)	12	1	12	10	120

[1] There are no capital costs or operating and maintenance costs associated with this collection of information.

The burden estimate for this collection of information is based on agency records and experience over the past 3 years. Agency personnel handling the petitions for administrative reconsideration of an action estimate approximately 12 requests being received by the agency annually, each requiring an average of 10 hours preparation time.

Dated: September 19, 2000.

William K. Hubbard,

Senior Associate Commissioner for Policy, Planning, and Legislation.

[FR Doc. 00–24538 Filed 9–22–00; 8:45 am]

BILLING CODE 4160–01–F

DEPARTMENT OF HEALTH AND HUMAN SERVICES

Food and Drug Administration

[Docket No. 00N–0726]

Agency Information Collection Activities; Announcement of OMB Approval; General Licensing Provisions: Changes to an Approved Application, Labeling, and Revocation and Suspension

AGENCY: Food and Drug Administration, HHS.

ACTION: Notice.

SUMMARY: The Food and Drug Administration (FDA) is announcing that a collection of information entitled ''General Licensing Provisions: Changes to an Approved Application, Labeling, and Revocation and Suspension'' has been approved by the Office of Management and Budget (OMB) under the Paperwork Reduction Act of 1995.

FOR FURTHER INFORMATION CONTACT: JonnaLynn P. Capezzuto, Office of Information Resources Management (HFA–250), Food and Drug Administration, 5600 Fishers Lane, Rockville, MD 20857, 301–827–4659.

SUPPLEMENTARY INFORMATION: In the **Federal Register** of June 20, 2000 (65 FR 38290), the agency announced that the proposed information collection had been submitted to OMB for review and clearance under 44 U.S.C. 3507. An agency may not conduct or sponsor, and a person is not required to respond to, a collection of information unless it displays a currently valid OMB control number. OMB has now approved the information collection and has assigned OMB control number 0910–0315. The approval expires on August 31, 2003. A copy of the supporting statement for this information collection is available on the Internet at http://www.fda.gov/ohrms/dockets.

Dated: September 19, 2000.

William K. Hubbard,

Senior Associate Commissioner for Policy, Planning, and Legislation.

[FR Doc. 00–24478 Filed 9–22–00; 8:45 am]

BILLING CODE 4160–01–F

DEPARTMENT OF HEALTH AND HUMAN SERVICES

Food and Drug Administration

[Docket No. 00N–1359]

Agency Information Collection Activities; Submission for OMB Review; Comment Request; Affirmation of Generally Recognized as Safe (GRAS) Status

AGENCY: Food and Drug Administration, HHS.

ACTION: Notice.

SUMMARY: The Food and Drug Administration (FDA) is announcing that the proposed collection of information listed below has been submitted to the Office of Management and Budget (OMB) for review and clearance under the Paperwork Reduction Act of 1995.

DATES: Submit written comments on the collection of information by October 25, 2000.

ADDRESSES: Submit written comments on the collection of information to the Office of Information and Regulatory Affairs, OMB, New Executive Office Bldg., 725 17th St. NW., rm. 10235, Washington, DC 20503, Attn: Wendy Taylor, Desk Officer for FDA.

FOR FURTHER INFORMATION CONTACT: Peggy Schlosburg, Office of Information Resources Management (HFA–250), Food and Drug Administration, 5600 Fishers Lane, Rockville, MD 20857, 301–827–1223.

SUPPLEMENTARY INFORMATION: In compliance with 44 U.S.C. 3507, FDA has submitted the following proposed collection of information to OMB for review and clearance.

Affirmation of Generally Recognized As Safe (GRAS) Status (21 CFR 170.35(c)(1)) (OMB Control Number 0910–0132)—Extension

Under the authority of sections 201, 402, 409, and 701 of the Federal Food, Drug, and Cosmetic Act (the act) (21 U.S.C. 321, 342, 348, and 371), FDA reviews petitions for affirmation as GRAS that are submitted on a voluntary basis by the food industry and other interested parties. Under section 409 of the act, the agency has the authority to regulate food additives. Section 201(s) of the act defines ''food additive'' and expressly excludes from the definition substances GRAS for use in food.

Specifically under section 201(s) of the act, a substance is GRAS if it is generally recognized among experts qualified by scientific training and experience to evaluate its safety, to be safe through either scientific procedures or common use in food. The act has historically been interpreted to permit food manufacturers to make their own determination that use of a substance in food is GRAS. To implement the GRAS provisions of the act, FDA has issued procedural regulations under § 170.35(c)(1) (21 CFR 170.35(c)(1)). These regulations establish a process by which a person may obtain FDA concurrence with a GRAS determination; this concurrence is referred to as ''GRAS affirmation.'' These regulations set forth the information to be submitted to FDA to obtain agency concurrence that a substance is GRAS (§ 170.35(c)(1)).

GRAS petitions are reviewed by FDA to ascertain whether the available data establish that the intended use of the substance is GRAS based upon either a history of the safe use of the substance, or upon widely available safety data (scientific procedures). The GRAS affirmation process is a voluntary one, and there is some risk that FDA may not agree with the petitioner's GRAS determination. The GRAS petition process does provide a public procedure for coordinating GRAS determinations. The process reduces the potential for public health problems when substances are marketed based upon unwarranted safety determinations and allows a food manufacturer to rely on the lawful status of a substance that has been affirmed by FDA as GRAS.

In the **Federal Register** of July 5, 2000 (65 FR 41472), the agency requested comments on the proposed collection of information. No comments were received.

FDA estimates the burden of this collection of information as follows:

TABLE 1.—ESTIMATED ANNUAL REPORTING BURDEN[1]

21 CFR section	Number of respondents	Annual frequency per response	Total annual responses	Hours per response	Total hours
170.35(c)(1)	1	1	1	2,614 (average)	2,614

[1] There are no capital costs or operating and maintenance costs associated with this collection of information.

FDA estimates that it may receive one GRAS petition annually. Although the burden varies with the type, size, and complexity of the petition submitted, GRAS petitions may involve analytical work, analysis of appropriate toxicological studies, and the work of drafting the petition itself. Since 1980, FDA has not received any petitions for affirmation of GRAS status under 21 CFR part 186—Indirect Food Substances Affirmed As Generally Recognized As Safe. Section 184.1(a) (21 CFR 184.1(a)) affirms the use of those substances affirmed as GRAS in 21 CFR part 184—Direct Food Substances Affirmed As Generally Recognized As Safe, for use as indirect food ingredients.

Dated: September 19, 2000.

William K. Hubbard,

Senior Associate Commissioner for Policy, Planning, and Legislation.

[FR Doc. 00–24479 Filed 9–22–00; 8:45 am]

BILLING CODE 4160–01–F

DEPARTMENT OF HEALTH AND HUMAN SERVICES

Food and Drug Administration

[Docket No. 00N–1328]

Agency Information Collection Activities; Submission for OMB Review; Comment Request; Latex Condoms; User Labeling; Expiration Dating

AGENCY: Food and Drug Administration, HHS.

ACTION: Notice.

SUMMARY: The Food and Drug Administration (FDA) is announcing that the proposed collection of information listed below has been submitted to the Office of Management and Budget (OMB) for review and clearance under the Paperwork Reduction Act of 1995.

DATES: Submit written comments on the collection of information by October 25, 2000.

ADDRESSES: Submit written comments on the collection of information to the Office of Information and Regulatory Affairs, OMB, New Executive Office Bldg., 725 17th St. NW., rm. 10235, Washington, DC 20503, Attn: Wendy Taylor, Desk Officer for FDA.

FOR FURTHER INFORMATION CONTACT: Peggy Schlosburg, Office of Information Resources Management (HFA–250), Food and Drug Administration, 5600 Fishers Lane, Rockville, MD 20857, 301–827–1223.

SUPPLEMENTARY INFORMATION: In compliance with 44 U.S.C. 3507, FDA has submitted the following proposed collection of information to OMB for review and clearance.

Latex Condoms; User Labeling; Expiration Dating—21 CFR 801.435 (OMB Control No. 0910–0352)—Extension

Sections 502(a), 519, 701, and 704 of the Federal Food, Drug, and Cosmetic Act (the act) (21 U.S.C. 352(a), 360(i), 371, and 374) establish the statutory authority to collect information under this regulation. Section 519 of the act describes recordkeeping, section 502(a) describes misbranding, section 704 describes authority for inspections, and section 701 describes general administrative procedures and regulations and hearings.

To protect the public health and minimize the risk of device failure, latex condoms are required to be labeled with an expiration date, which must be supported by data from quality control tests demonstrating physical and mechanical integrity of three random lots of the same product that were stored under accelerated and real time conditions (§ 801.435 (21 CFR 801.435)).

The recording of shelf life testing by condom manufacturers is used to support the expiration dating on the labeling of latex condoms. Information concerning latex shelf life is necessary to allow lay users to use these products safely by avoiding use of products that may have degraded. Degradation of latex film products like latex condoms occurs when latex is exposed to various types of environmental conditions normally experienced in product use, shipment, or storage situations. The effectiveness of latex condoms as a barrier to the transmission of infectious agents is dependent upon the integrity of the latex material. The information and records generated by condom manufacturers under this regulation will be used to establish an expiration date that will inform consumers when the product should no longer be used.

Section 510(h) of the act (21 U.S.C. 360(h)) requires that condom manufacturers as device manufacturers be inspected at least once in a 2-year period. During that inspection, FDA inspectors will review the test records used to support the expiration date in order to ensure that the expiration date is accurate. The respondents to this collection of information are domestic and foreign condom manufacturers.

In the **Federal Register** of June 23, 2000 (65 FR 39150), the agency requested comments on the proposed collection of information. No comments were received.

FDA estimates the burden of this collection of information as follows:

TABLE 1.—ESTIMATED ANNUAL REPORTING BURDEN[1]

21 CFR section	Number of respondents	Annual frequency per response	Total annual responses	Hours per response	Total hours
801.435	45	1	45	96	4,320

[1] There are no capital costs or operating and maintenance costs associated with this collection of information.

The number of domestic establishments was estimated by reviewing the FDA data base of registered medical device manufacturers to arrive at 5 domestic and 40 foreign condom manufacturers. Based upon conversations with condom manufacturers, FDA field personnel, and comments received from the public

during this collections initial approval, FDA determined the number hours to complete labeling and testing of condoms to be 96 hours per respondent.

Dated: September 19, 2000.

William K. Hubbard,

Senior Associate Commissioner for Policy, Planning, and Legislation.

[FR Doc. 00–24480 Filed 9–22–00; 8:45 am]

BILLING CODE 4160–01–F

DEPARTMENT OF THE INTERIOR

Fish and Wildlife Service

Receipt of Application for Endangered Species Permit

AGENCY: Fish and Wildlife Service, Interior.

ACTION: Notice of Receipt of Application for Endangered Species Permit.

SUMMARY: The following applicants have applied for permits to conduct certain activities with endangered species. This notice is provided pursuant to Section 10(c) of the Endangered Species Act of 1973, as amended (16 U.S.C. 1531 *et seq.*).

If you wish to comment, you may submit comments by any one of several methods. You may mail comments to the Service's Regional Office (see **ADDRESSES**). You may also comment via the internet to ''victoria_davis@fws.gov''. Please submit comments over the internet as an ASCII file avoiding the use of special characters and any form of encryption. Please also include your name and return address in your internet message. If you do not receive a confirmation from the Service that we have received your internet message, contact us directly at either telephone number listed below (see **FURTHER INFORMATION**). Finally, you may hand deliver comments to either Service office listed below (see **ADDRESSES**). Our practice is to make comments, including names and home addresses of respondents, available for public review during regular business hours. Individual respondents may request that we withhold their home address from the administrative record. We will honor such requests to the extent allowable by law. There may also be other circumstances in which we would withhold from the administrative record a respondent's identity, as allowable by law. If you wish us to withhold your name and address, you must state this prominently at the beginning of your comments. We will not; however, consider anonymous comments. We will make all submissions from organizations or businesses, and from individuals identifying themselves as representatives or officials of organizations or businesses, available for public inspection in their entirety.

DATES: Written data or comments on these applications must be received, at the address given below, by October 25, 2000.

ADDRESSES: Documents and other information submitted with these applications are available for review, *subject to the requirements of the Privacy Act and Freedom of Information Act,* by any party who submits a written request for a copy of such documents to the following office within 30 days of the date of publication of this notice: U.S. Fish and Wildlife Service, 1875 Century Boulevard, Suite 200, Atlanta, Georgia 30345 (Attn: Victoria Davis, Permit Biologist). Telephone: 404/679–4176; Facsimile: 404/679–7081.

FOR FURTHER INFORMATION CONTACT: Victoria Davis, Telephone: 404/679–4176; Facsimile: 404/679–7081.

SUPPLEMENTARY INFORMATION:

Applicant: Brian R. Roh, Burns & McDonnell, Kansas City, Missouri, TE033460–0.

The applicant requests authorization to take (capture, identify, and release) the endangered American Burying Beetle, *Nicrophorus americanus,* around Lake Fort Smith and Lake Shepherd Springs in Crawford County, Arkansas for the purpose of enhancement of survival of the species.

Applicant: Felicia J. Sanders, Tucker, Georgia, TE033469–0.

The applicant requests authorization to take (capture, band, install inserts, and harass during nest monitoring and construction of artificial cavities) the endangered red-cockaded woodpecker, *Picoides borealis,* throughout the species range, for the purpose of enhancement of survival of the species.

Dated: September 18, 2000.

Sam D. Hamilton,

Regional Director.

[FR Doc. 00–24533 Filed 9–22–00; 8:45 am]

BILLING CODE 4310–55–P

DEPARTMENT OF THE INTERIOR

Bureau of Land Management

[MT–925–2810–XU–241E]

Notice of Rescindment of Special Fire Restrictions and Closures in the Billings, Miles City, Malta and Lewistown Field Offices; MT

AGENCY: Bureau of Land Management, Interior.

ACTION: Notice.

SUMMARY: Pursuant to 43 Code of Federal Regulations 9212.2, the prohibitions listed in Order No. MT–00–12, MT–00–09 (Stillwater, Carbon and Sweetgrass counties), MT–00–05 applicable to Bureau of Land Management lands administered by the Billings, Miles City, Malta, and Lewistown Field Offices, dated September 12, 2000, September 5, 2000 and August 11, 2000, will be terminated at 12:01 a.m. Friday, September 22, 2000.

DATES: Restrictions are terminated at 12:01 a.m. on Friday, September 22, 2000.

ADDRESSES: Comments should be sent to BLM Montana State Director, Attention: Pat Mullaney, P.O. Box 36800, Billings, Montana 59107–6800.

FOR FURTHER INFORMATION CONTACT: Pat Mullaney, Fire Management Specialist, 406–896–2915.

Dated: September 20, 2000.

Mat Millenbach,

State Director.

[FR Doc. 00–24623 Filed 9–21–00; 2:08 pm]

BILLING CODE 4310–$$–P

DEPARTMENT OF THE INTERIOR

Bureau of Land Management

[UT–930–07–1320–00]

Release of Coal Exploration License Data, UTU–48608

ACTION: Notice of determination to allow public access to data from coal exploration license UTU–48608.

SUMMARY: BLM regulations at 43 CFR 2.22 and 3410.4(b) provide that data obtained under an exploration license will be kept confidential until the lands have been leased or BLM determines that public access to the data would not damage the competitive position of the licensee, whichever comes first. Coal exploration License UTU–48068 was issued to Royal Land Company on August 4, 1981. Exploration on this license included drilling 15 holes in the vicinity of North Horn Mountain, Emery County, Utah. The lands covered by this license were offered for lease on May 29, 1982, and no bids were received. Since May 29, 1982, no application has been made for a lease on these lands in accordance with 43 CFR 3425. The coal interests in part of the lands contained within UTU–48068 were transferred to the State of Utah pursuant to the provisions of the Utah Schools and Lands Exchange Act of 1998.

On December 19, 1996, BLM published its preliminary determination that release of the data would not damage the competitive position of the licensee or any participants in the **Federal Register** (61 FR 67061). Only one company responded with an assertion that their competitive position would be harmed by the release of the data. Shortly after this response, the respondent divested themselves of their coal interests. On August 18, 1999, a letter was sent to their apparent successor-in-interest to enable them to provide any further information in support of an assertion that they might be harmed by BLM's release of the data. Their August 29, 1999, response expressed a desire to maintain confidentiality of the data but provided no information to support any assertion that their competitive position would be harmed by BLM allowing the data to become public. Therefore, in accordance with 43 CFR 3410.4(b), BLM has determined that the data acquired by Royal Land Company and any participants in coal exploration license UTU–48608 can be made public without damage to the competitive position of the licensee or any participants. The coal exploration data, including drill hole logs and coal quality analyses, will be made public effective 30 days from publication of this notice. This decision may be appealed to the Interior Board of Land Appeals, Office of the Secretary, in accordance with the regulations contained in 43 CFR, Part 4. If an appeal is taken, your notice of appeal must be filed with the Bureau of Land Management, Utah State Office, P.O. Box 45155, Salt Lake City, Utah 84145–0155 within 30 days from publication of this notice. The appellant has the burden of showing that the decision appealed from is in error. If you wish to file a petition (pursuant to regulation 43 CFR 4.21)(58 FR 4939, January 19, 1993)(request) for a stay (suspension) of the effectiveness of this decision during the time that your appeal is being reviewed by the Board, the petition for a stay must accompany your notice of appeal. A petition for a stay is required to show sufficient justification based on the standards listed below. Copies of the notice of appeal and petition for a stay must be submitted to the Interior Board of Land Appeals and to the appropriate Office of the Solicitor (see 43 CFR 4.413) at the same time the original documents are filed in this office. If you request a stay, you have the burden of proof to demonstrate that a stay should be granted.

Standards for Obtaining a Stay

Except as otherwise provided by law or other pertinent regulation, a petition for a stay of a decision pending appeal shall show sufficient justification based on the following standards:

(1) The relative harm to the parties if the stay is granted or denied,

(2) The likelihood of the appellant's success on the merits,

(3) The likelihood of immediate and irreparable harm if the stay is not granted, and

(4) Whether the public interest favors granting the stay.

FOR FURTHER INFORMATION CONTACT: Douglas M. Koza, Deputy State Director Natural Resources, U.S. Bureau of Land Management, Utah State Office, P.O. Box 45155, Salt Lake City, Utah 84145–0155.

Dated: September 19, 2000.

Robert Lopez,

(Acting) Deputy State Director Natural Resources.

[FR Doc. 00–24529 Filed 9–22–00; 8:45 am]

BILLING CODE 4310–DQ–$$–M

DEPARTMENT OF THE INTERIOR

Bureau of Land Management

[CA–610–09–0777–42]

Meeting of the California Desert District Advisory Council

SUMMARY: Notice is hereby given, in accordance with Public Laws 92–463 and 94–579, that the California Desert District Advisory Council to the Bureau of Land Management, U.S. Department of the Interior, will participate in a field tour of the BLM-administered public lands on Friday, October 20, 2000, from 8:00 a.m to 4 p.m., and meet in formal session on Saturday, October 21, from 8 a.m. to 5 p.m. The Saturday meeting will be held in the City Council Chambers at City Hall, located at 220 East Mountain View, Barstow, California.

The Council and interested members of the public will assemble for the field tour at the Holiday Inn parking lot at 7:45 a.m. and depart at 8 a.m. The hotel is located at 1511 East Main Street in Barstow. Tour stops will include sites along Route 66, Amboy Crater, Cadiz Land Company for a discussion on the proposed Cadiz-Metropolitan Water District (MWD) Groundwater and Dry-Year Supply Program, Camp Essex (Patton Camp), and Goffs. Members of the public are welcome to participate in the tour, but should plan on providing their own transportation, drinks, and lunch.

The Council will meet in formal session on Saturday. Agenda items will include updates/briefings on the BLM National Off-Highway Vehicle Management Strategy, Route 66, and the California Desert District Recreation Fee District Policy. At 1:00 p.m. discussions will focus on the proposed Cadiz-MWD Groundwater Storage Project. The Council meeting also will serve as a public meeting during which BLM will accept and record public comment regarding the proposed project. Members of the public must register with the Council Chairman to speak. The time allotted each speaker will be based upon the number of people who register to speak.

All Desert District Advisory Council meetings are open to the public. Time for public comment may be made available by the Council Chairman during the presentation of various agenda items, and is scheduled at the beginning of the meeting for topics not on the agenda.

Written comments may be filed in advance of the meeting for the California Desert District Advisory Council, c/o Bureau of Land Management, Public Affairs Office, 6221 Box Springs Boulevard, Riverside, California 92507–0714. Written comments also are accepted at the time of the meeting and, if copies are provided to the recorder, will be incorporated into the minutes.

FOR FURTHER INFORMATION CONTACT: Doran Sanchez at (909) 697–5220, BLM California Desert District External Affairs.

Tim Salt,

District Manager.

[FR Doc. 00–24532 Filed 9–22–00; 8:45 am]

BILLING CODE 4310–40–P

DEPARTMENT OF THE INTERIOR

National Park Service

Notice of Intention To Extend a Concession Contract at Crater Lake National Park

SUMMARY: Pursuant to the National Park Service Concessions Management Improvement Act of 1998, notice is hereby given that the National Park Service intends to extend the concession contract with Crater Lake Lodge, Inc., authorizing continuation of visitor services which include lodging, food service, campground, gasoline service, retail merchandise, and boat tour services within Crater Lake National Park. This short-term extension is necessary to avoid an interruption of public services while the National Park

Service finalizes and issues a Prospectus soliciting offers to provide these services under a new longer-term contract. This short-term extension will be for a one-year period beginning November 1, 2000. This notice is in pursuant to 36 CFR part 51, section 51.23.

SUPPLEMENTARY INFORMATION: The concession contract at Crater Lake National Park will expire on October 31, 2000. The National Park Service is in the process of completing the necessary documents to competitively award a new longer-term concession contract. This 1-year extension is necessary to allow for completion and issuance of the Prospectus, leading to the selection of a concessioner for a new longer-term concession contract.

Information about this notice can be sought from: National Park Service, Chief, Concession Program Management Office, Pacific West Region, Attn: Mr. Tony Sisto, 600 Harrison Street, Suite 600, San Francisco, California 94107–1372 or call (415) 427–1366.

Dated: September 14, 2000.

Cynthia Ip,

Acting Regional Director, Pacific West Region.

[FR Doc. 00–24501 Filed 9–22–00; 8:45 am]

BILLING CODE 4310–70–P

DEPARTMENT OF THE INTERIOR

National Park Service

Pipestone National Monument; Environmental Impact Statement

AGENCY: National Park Service, Interior.

ACTION: Notice of intent to prepare a general management plan and environmental impact statement for Pipestone National Monument, Minnesota.

SUMMARY: The National Park Service (NPS) will prepare a general management plan (GMP) and an associated environmental impact statement (EIS) for Pipestone National Monument, Minnesota, in accordance with section 102(2)(C) of the National Environmental Policy Act of 1969 (NEPA). This notice is being furnished as required by NEPA Regulations 40 CFR 1501.7.

To facilitate sound planning and environmental assessment, the NPS intends to gather information necessary for the preparation of the EIS, and to obtain suggestions and information from other agencies and the public on the scope of issues to be addressed in the EIS. Comments and participation in this scoping process are invited.

Participation in the planning process will be encouraged and facilitated by various means, including newsletters and open houses or meetings. The NPS will conduct public scoping meetings to explain the planning process and to solicit opinion about issues to address in the GMP/EIS. Notification of all such meetings will be announced in the local press and in NPS newsletters.

ADDRESSES: Written comments and information concerning the scope of the EIS, requests to be added to the project mailing list, and other matters should be directed to: Mr. Jim LaRock, Superintendent, Pipestone National Monument, 36 Reservation Avenue, Pipestone, Minnesota 56164. Telephone: 507–825–5464. E-mail: jim_larock@nps.gov

FOR FURTHER INFORMATION CONTACT: Jim LaRock, Superintendent, Pipestone National Monument, at the address and telephone number listed above.

SUPPLEMENTARY INFORMATION: Pipestone National Monument is located near the Minnesota-South Dakota border. Within the 283-acres monument are pipestone (catlinite) quarries, native tallgrass prairie, and quartzite bluffs. The monument was established for two purposes: (1) To manage the pipestone quarries to provide American Indians the opportunity to quarry the pipestone, and (2) to preserve and manage the ethnological, historical, archeological, and geological resources of the area for the betterment and enjoyment of all.

In accordance with NPS Park Planning policy, the GMP will ensure the monument has a clearly defined direction for resource preservation and visitor use. The GMP will help define what types of resource conditions, visitor uses, and management actions will best achieve the mission of the NPS and Pipestone National Monument. Additionally the GMP process will address facility needs, staffing, park interpretation and activities, and maintenance. It will be developed in consultation with servicewide program managers, interested parties, and the general public. It will be based on an adequate analysis of existing and potential resource conditions and visitor experiences, environmental impacts, and costs of alternative courses of action.

The environmental review of the GMP/EIS for the monument will be conducted in accordance with requirements of the NEPA (42 U.S.C. 4371 *et seq.*), NEPA regulations (40 CFR 1500–1508), other appropriate Federal regulations, and NPS procedures and policies for compliance with those regulations.

Dated: September 13, 2000.

Linda C. Witkowski,

Acting Regional Director.

[FR Doc. 00–24502 Filed 9–22–00; 8:45 am]

BILLING CODE 4310–70–P

DEPARTMENT OF THE INTERIOR

National Park Service

Death Valley National Park Advisory Commission; Notice of Meeting

Notice is hereby given in accordance with the Federal Advisory Commission Act that a meeting of the Death Valley National Park Advisory Commission will be held October 11 and 12, 2000 at the Furnace Creek Inn within Death Valley National Park.

The main agenda will include:

- Death Valley National Park's Revised Draft General Management Plan;
- Updates on Park Operational Plans;
- Appropriate field trips within Death Valley National Park, if time allows.

The Advisory Commission was established by PL #03–433 to provide for the advice on development and implementation of the General Management Plan.

Members of the Commission are Janice Allen, Kathy Davis, Michael Dorame, Mark Ellis, Pauline Esteves, Stanley Haye, Sue Hickman, Cal Jepson, Joan Lolmaugh, Gary O'Connor, Alan Peckham, Michael Prather, Wayne Schulz, and Gilbert Zimmerman.

This meeting is open to the public.

Richard H. Martin,

Superintendent, Death Valley National Park.

[FR Doc. 00–24500 Filed 9–22–00; 8:45 am]

BILLING CODE 4310–70–P

DEPARTMENT OF THE INTERIOR

National Park Service

AGENCY: National Park Service, Interior.

ACTION: Notice of Public Hearing; Mojave National Preserve.

SUMMARY: Pursuant to public comment to **Federal Register** Notice of Realty Action published April 18, 2000 (Volume 65, Number 75, pages 20831–20832) on the exchange of federal property for private property at Mojave National Preserve, this notice announces a public hearing to be held regarding the proposed exchange, at the date, time and place noted below. The hearing is open to the public.

Date: October 11, 2000.

Time: 11 am–2 pm.

Place: Hole in the Wall Visitors Center, Mojave National Preserve.

FOR FURTHER INFORMATION CONTACT: The Offices of the Mojave National Preserve, Barstow, California 92311. Tel. (760) 255–8801.

SUPPLEMENTARY INFORMATION: In order to resolve the encroachment of a private residence and ranch headquarters on federal land, it is necessary for the National Park Service to effect a land exchange at Mojave National Preserve, San Bernardino California. Comments received in response to the Federal Register Notice of Realty Action, included requests for a public hearing on the exchange. National Park Service staff will brief those in attendance at the hearing on the history, purpose, and procedures involved in the exchange. For more detailed information on the proposed exchange, see **Federal Register** Notice of Realty Action published April 18, 2000 (Volume 65, Number 75, pages 20831–20832).

Dated: September 12, 2000.

Cynthia L. Ip,

Acting Regional Director, Pacific West Region.

[FR Doc. 00–24503 Filed 9–22–00; 8:45 am]

BILLING CODE 4310–70–P

DEPARTMENT OF JUSTICE

Drug Enforcement Administration

Importation of Controlled Substances; Notice of Application

Pursuant to Section 1008 of the Controlled Substances Import and Export Act (21 U.S.C. 958(I)), the Attorney General shall, prior to issuing a registration under this Section to a bulk manufacturer of a controlled substance in Schedule I or II and prior to issuing a regulation under Section 1002(a) authorizing the importation of such a substance, provide manufacturers holding registrations for the bulk manufacture of the substance an opportunity for a hearing.

Therefore, in accordance with Section 1301.34 of Title 21, Code of Federal Regulations (CFR), notice is hereby given that on June 19, 2000, Abbott Laboratories, 1776 North Centennial Drive, McPherson, Kansas 67460–1247, made application to the Drug Enforcement Administration to be registered as an importer of remifentanil (9739), a basic class of controlled substance listed in Schedule II.

The firm plans to import the remifentanil to manufacture Ultiva for the U.S. market.

Any manufacturer holding, or applying for, registration as a bulk manufacturer of this basic class of controlled substance may file written comments on or objections to the application described above and may, at the same time, file a written request for a hearing on such application in accordance with 21 CFR 1301.43 in such form as prescribed by 21 CFR 1316.47.

Any such comments, objections or requests for a hearing may be addressed, in quintuplicate, to the Deputy Assistant Administrator, Office of Diversion Control, Drug Enforcement Administration, United States Department of Justice, Washington, D.C. 20537, Attention: DEA Federal Register Representative (CCR), and must be filed no later than October 25, 2000.

This procedure is to be conducted simultaneously with and independent of the procedures described in 21 CFR 1301.34(b), (c), (d), (e), and (f). As noted in a previous notice at 40 FR 43745–46 (September 23, 1975), all applicants for registration to import a basic class of any controlled substance in Schedule I or II are and will continue to be required to demonstrate to the Deputy Assistant Administrator, Office of Diversion Control, Drug Enforcement Administration that the requirements for such registration pursuant to 21 U.S.C. 958(a), 21 U.S.C. 823(a), and 21 CFR 1301.34(a), (b), (c), (d), (e), and (f) are satisifed.

Dated: September 8, 2000.

John H. King,

Office of Diversion Control, Drug Enforcement Administration.

[FR Doc. 00–24556 Filed 9–22–00; 8:45 am]

BILLING CODE 4410–09–M

DEPARTMENT OF JUSTICE

Drug Enforcement Administration Manufacturer of Controlled Substances; Notice of Application

Pursuant to Section 1301.33(a) of Title 21 of the Code of Federal Regulations (CFR), this is notice that on July 24, 2000, American Radiolabeled Chemical, Inc., 11624 Bowling Green Drive, St. Louis, Missouri 63146, made application by renewal to the Drug Enforcement Administration (DEA) for registratin as a bulk manufacturer of the basic classes of controlled substances listed below:

Drug	Schedule
Gamma hydroxybutyric acid (2010).	I
Lysergic acid diethylamide (7315)	I
Dimethyltryptamine (7435)	I
Dihydromorphine (9145)	I
Phencyclidine (7471)	II
Cocaine (9041)	II
Codeine (9050)	II
Hydromorphone (9150)	II
Benzoylecgonine (9180)	II
Meperidine (9230)	II
Metazocine (9240)	II
Morphine (9300)	II
Oxymorphone (9652)	II

The firm plans to bulk manufacture small quantities of the listed controlled substances as radiolabeled compound.

Any other such applicant and any person who is presently registered with DEA to manufacture such substance may file comments or objections to the issuance of the proposed registration.

Any such comments or objections may be addressed, in quintuplicate, to the Deputy Assistant Administrator, Office of Diversion Control, Drug Enforcement Administration, United States Department of Justice, Washington, DC 20537, Attention: DEA Federal Register Representative (CCR), and must be filed no later than November 24, 2000.

Dated: September 6, 2000.

John H. King,

Deputy Assistant Administrator, Office of Diversion Control Drug Enforcement Administration.

[FR Doc. 00–24560 Filed 9–22–00; 8:45 am]

BILLING CODE 4410–09–M

DEPARTMENT OF JUSTICE

Drug Enforcement Administration

Importation of Controlled Substances; Notice of Application

Pursuant to Section 1008 of the Controlled Substances Import and Export Act (21 U.S.C. 958(i)), the Attorney General shall, prior to issuing a registration under this Section to a bulk manufacturer of a controlled substance in Schedule I or II and prior to issuing a regulation under Section 1002(a) authorizing the importation of such a substance, provide manufacturers holding registrations for the bulk manufacture of the substance an opportunity for a hearing.

Therefore, in accordance with Section 1301.34 of Title 21, Code of Federal Regulations (CFR), notice is hereby given that on July 5, 2000, Glaxo Wellcome Inc., Attn: Jeffrey A. Weiss, 1011 North Arendell Avenue, P.O. Box 1217, Zebulon, North Carolina 27597–2309, made application by renewal to the Drug Enforcement Administration to be registered as an importer of remifentanil (9739), a basic class of controlled substance listed in Schedule II.

The remifentanil is being imported for the production of Ultiva dosage forms and for research and new product development.

Any manufacturer holding, or applying for, registration as a bulk manufacturer of this basic class of controlled substance may file written comments on or objections to the application described above and may, at the same time, file a written request for a hearing on such application in accordance with 21 CFR 1301.43 in such form as prescribed by 21 CFR 1316.47.

Any such comments, objections, or requests for a hearing may be addressed, in quintuplicate, to the Deputy Assistant Administrator, Office of Diversion Control, Drug Enforcement Administration, United States Department of Justice, Washington, DC 20537, Attention: DEA Federal Register Representative (CCR), and must be filed no later than October 25, 2000.

This procedure is to be conducted simultaneously with and independent of the procedures described in 21 CFR 1301.34(b), (c), (d), (e), and (f). As noted in a previous notice at 40 FR 43745–46 (September 23, 1975), all applicants for registration to import basic class of any controlled substance in Schedule I or II are and will continue to be required to demonstrate to the Deputy Assistant Administrator, Office of Diversion Control, Drug Enforcement Administration that the requirements for such registration pursuant to 21 U.S.C. 958(a), 21 U.S.C. 823(a), and 21 CFR 1301.34(a), (b), (c), (d), (e), and (f) are satisfied.

Dated: September 1, 2000.

John H. King,

Deputy Assistant Administrator, Office of Diversion Control, Drug Enforcement Administration.

[FR Doc. 00–24557 Filed 9–22–00; 8:45 am]

BILLING CODE 4410–09–M

DEPARTMENT OF JUSTICE

Drug Enforcement Administration

Manufacturer of Controlled Substances; Notice of Registration

By Notice dated April 21, 2000, and published in the **Federal Register** on April 28, 2000, (65 FR 24986), Lonza Riverside, 900 River Road, Conshohocken, Pennsylvania 19428, made application by letter to the Drug Enforcement Administration (DEA) to be registered ax a bulk manufacturer of gamma hydroxybutyric acid (2010), a basic class of controlled substance listed in Schedule I.

The firm plans to bulk manufacture gamma hydroxybutyric acid for distribution to its customers.

No comments or objections have been received. DEA has considered the factors in Title 21, United States Code, Section 823(a) and determined that the registration of Lonza Riverside to manufacture the listed controlled substances is consistent with the public interest at this time. DEA has investigated Lonza Riverside on a regular basis to ensure that the company's continued registration is consistent with the public interest. These investigations have included inspection and testing of the company's physical security systems, audits of the company's records, verification of the company's compliance with state and local laws, and a review of the company's background and history.

Therefore, pursuant to 21 U.S.C. 823 and 28 CFR 0.100 and 0.104, the Deputy Assistant Administrator, Office of Diversion Control, hereby orders that the application submitted by the above firm for registration as a bulk manufacturer of the basic class of controlled substance listed above is granted.

Dated: September 1, 2000.

John H. King,

Deputy, Assistant Administrator, Office of Diversion Control Drug Enforcement Administration.

[FR Doc. 00–24561 Filed 9–22–00; 8:45 am]

BILLING CODE 4410–09–M

DEPARTMENT OF JUSTICE

Drug Enforcement Administration

Importation of Controlled Substances; Notice of Application

Pursuant to Section 1008 of the Controlled Substances Import and Export Act (21 U.S.C. 958(i)), the Attorney General shall, prior to issuing a registration under this Section to a bulk manufacturer of a controlled substance in Schedule I or II and prior to issuing a regulation under Section 1002(a) authorizing the importation of such a substance, provide manufacturers holding registrations for the bulk manufacture of the substance an opportunity for a hearing.

Therefore, in accordance with Section 1301.34 of Title 21, Code of Federal Regulations (CFR), notice is hereby given that on March 17, 2000, Noramco Inc., 1440 Olympic Drive, Athens, Georgia 30601, made application to the Drug Enforcement Administration to be registered as an importer of the basic classes of controlled substances listed below:

Drug	Schedule
Phenylacetone (8501)	II
Fentanyl (9801)	II

The firm plans to import phenylacetone for the production of amphetamine and fentanyl for seed material for the manufacture of fentanyl base.

Any manufacturer holding, or applying for, registration as a bulk manufacturer of these basic classes of controlled substances may file written comments on or objections to the application described above and may, at the same time, file a written request for a hearing on such application in accordance with 21 CFR 1301.43 in such form as prescribed by 21 CFR 1316.47.

Any such comments, objections, or requests for a hearing may be addressed, in quintuplicate, to the Deputy Assistant Administrator, Office of Diversion Control, Drug Enforcement Administration, United States Department of Justice, Washington, DC 20537, Attention: DEA Federal Register Representative (CCR), and must be filed no later than October 25, 2000.

This procedure is to be conducted simultaneously with and independent of the procedures described in 21 CFR 1301.34 (b), (c), (d), (e), and (f). As noted in a previous notice at 40 FR 43745–46 (September 23, 1975), all applicants for registration to import basic class of any controlled substance in Schedule I or II are and will continue to be required to demonstrate to the Deputy Assistant Administrator, Office of Diversion Control, Drug Enforcement Administration that the requirements for such registration pursuant to 21 U.S.C. 958(a), 21 U.S.C. 823(a), and 21 CFR 1311.42 (a), (b), (c), (d), (e), and (f) are satisfied.

Dated: September 5, 2000.

John H. King,

Deputy Assistant Administrator, Office of Diversion Control, Drug Enforcement Administration.

[FR Doc. 00–24555 Filed 9–22–00; 8:45 am]

BILLING CODE 4410–09–M

DEPARTMENT OF JUSTICE

Drug Enforcement Administration

Manufacturer of Controlled Substances; Notice of Application

Pursuant to Section 1301.33(a) of Title 21 of the Code of Federal Regulations (CFR), this is notice that on July 28,

2000, Noramco, Inc., 1400 Olympic Drive, Athens, Georgia 30601, made application by renewal to the Drug Enforcement Administration (DEA) for registration as a bulk manufacturer of the basic classes of controlled substances listed below:

Drug	Schedule
Amphetamine (1100)	II
Codeine (9050)	II
Oxycodone (9143)	II
Hydrocodone (9193)	II
Morphine (9300)	II
Thebaine (9333)	II
Fentanyl (9801)	II

The firm plans to support its other manufacturing facility with manufacturing and analytical testing.

Any other such applicant and any person who is presently registered with DEA to manufacture such substances may file comments or objections to the issuance of the proposed registration.

Any such comments, or objections may be addressed, in quintuplicate, to the Deputy Assistant Administrator, Office of Diversion Control, Drug Enforcement Administration, United States Department of Justice, Washington, D.C. 20537, Attention: DEA Federal Register Representative (CCR), and must be filed no later than November 24, 2000.

Dated: September 6, 2000.

John H. King,

Deputy Assisatnt Administrator, Office of Diversion Control, Drug Enforcement Administration.

[FR Doc. 00–24559 Filed 9–22–00; 8:45 am]

BILLING CODE 4410–09–M

DEPARTMENT OF JUSTICE

Drug Enforcement Administration

Importation of Controlled Substances; Notice of Application

Pursuant to Section 1008 of the Controlled Substances Import and Export Act (21 U.S.C. 958(i)), the Attorney General shall, prior to issuing a registration under this Section to a bulk manufacturer of a controlled substance in Schedule I or II and prior to issuing a regulation under Section 1002(a) authorizing the importation of such a substance, provide manufacturers holding registrations for the bulk manufacture of the substance an opportunity for a hearing.

Therefore, in accordance with Section 1301.34 of Title 21, Code of Federal Regulations (CFR), notice is hereby given that on August 3, 2000, Roche Diagnostics Corporation, 9115 Hague Road, Indianapolis, Indiana 46250, made application by letter to the Drug Enforcement Administration to be registered as an importer of alphamethadol (9605) a basic class of controlled substance listed in Schedule I.

The firm plans to import alphamethadol to manufacture diagnostic products for distribution to its customers.

Any manufacturer holding, or applying for, registration as a bulk manufacturer of this basic class of controlled substance may file written comments on or objections to the application described above and may, at the same time, file a written request for a hearing on such application in accordance with 21 CFR 1301.43 in such form as prescribed by 21 CFR 1316.47.

Any such comments, objections or requests for a hearing may be addressed, in quintuplicate, to the Deputy Assistant Administrator, Office of Diversion Control, Drug Enforcement Administration, United States Department of Justice, Washington, DC 20537, Attention: DEA Federal Register Representative (CCR), and must be filed no later than October 25, 2000.

This procedure is to be conducted simultaneously with and independent of the procedures described in 21 CFR 1301.34(b), (c), (d), (e), and (f). As noted in a previous notice at 40 FR 43745–46 (September 23, 1975), all applicants for registration to import a basic class of any controlled substance in Schedule I or II are and will continue to be required to demonstrate to the Deputy Assistant Administrator, Office of Diversion Control, Drug Enforcement Administration that the requirements for such registration pursuant to 21 U.S.C. 958(a), 21 U.S.C. 823(a), and 21 CFR 1301.34(a), (b), (c), (d), (e), and (f) are satisfied.

Dated: September 6, 2000.

John H. King,

Deputy Assistant Administrator, Office of Diversion Control Drug Enforcement Administration.

[FR Doc. 00–24558 Filed 9–22–00; 8:45 am]

BILLING CODE 4410–09–M

DEPARTMENT OF JUSTICE

Drug Enforcement Administration

Manufacturer of Controlled Substances; Notice of Registration

By Notice dated May 12, 2000, and published in the **Federal Register** on June 2, 2000, (65 FR 35397), Sigma Aldrich Research Biochemicals, Inc., Attn: Richard Milius, 1–3 Strathmore Road, Natick, Massachusetts 01760, made application by renewal to the Drug Enforcement Administration (DEA) to be registered as a bulk manufacturer of the basic classes of controlled substances listed below:

Drug	Schedule
Cathinone (1235)	I
Methcathinone (1237)	I
Aminorex (1585)	I
Alpha-Ethyltryptamine (7249)	I
Lysergic acid diethylamide (7315)	I
Tetrahydrocannabinols (7370)	I
4-Bromo-2, 5-dimethoxyamphetamine (7391)	I
4-Bromo-2, 5-dimethoxyphenethylamine (7392)	I
2, 5-Dimethoxyamphetamine (7396).	I
3, 4-Methylendioxyamphetamine (7400).	I
N-Hydroxy-3, 4-methylenedioxyamphetamine (7402)	I
3, 4-Methylenedioxy-N-ethylamphetamine (7404)	I
3,4-Methylenedioxymethamphetamine (7405).	I
Psilocybin (7437)	I
1-[1- (2-Thienyl)cyclohexyl]piperidine (7470)	I
Heroin (9200)	I
Normorphine (9313)	I
Amphetamine (1100)	II
Methamphetamine (1105)	II
Pentobarbital (2270)	II
Phenylcyclohexylamine (7460)	II
Phencyclidine (7471)	II
Cocaine (9041)	II
Codenine (9050)	II
Diprenorphine (9058)	II
Benzoylecgonine (9180)	II
Levomethorphan (9210)	II
Levorphanol (9220)	II
Meperidine (9230)	II
Metazocine (924)	II
Methadone (9250)	II
Morphine (9300)	II
Thebaine (9333)	II
Levo-alphacetylmethadol (LAAM) (9648).	II
Fentanyl (9801)	II

The firm plans to manufacture the listed controlled substances for laboratory reference standards and neurochemicals.

DEA has considered the factors in Title 21, United States Code, Section 823(a) and determined that the registration of Sigma Aldrich Research Biochemicals, Inc. to manufacture the listed controlled substances is consistent with the public interest at this time. DEA has investigated Sigma Aldrich Research Biochemicals, Inc. on a regular basis to ensure that the company's continued registration is consistent with the public interest. These investigations have included

inspection and testing of the company's physical security systems, audits of the company's records, verification of the company's compliance with state and local laws, and a review of the company's background and history. Therefore, pursuant to 21 U.S.C. 823 and 28 CFR 0.100 and 0.104, the Deputy Assistant Administrator, Office of Diversion Control, hereby orders that the application submitted by the above firm for registration as a bulk manufacturer of the basic classes of controlled substances listed above is granted.

August 18, 2000.

John H. King,

Deputy Assistant Administrator Office of Diversion Control Drug Enforcement Administration.

[FR Doc. 00–24562 Filed 9–22–00; 8:45 am]

BILLING CODE 4410–09–M

DEPARTMENT OF JUSTICE

Drug Enforcement Administration

[DEA #186F]

Controlled Substances: 2000 Aggregate Production Quotas

AGENCY: Drug Enforcement Administration (DEA), Justice.

ACTION: Notice of final 2000 aggregate production quotas.

SUMMARY: This notice establishes final 2000 aggregate production quotas for controlled substances in Schedules I and II of the Controlled Substances Act (CSA). The DEA has taken into consideration comments received in response to a notice of the proposed revised aggregate production quotas for 2000 published July 19, 2000 (65 FR 44836).

EFFECTIVE DATE: September 25, 2000.

FOR FURTHER INFORMATION CONTACT: Frank L. Sapienza, Chief, Drug and Chemical Evaluation Section, Drug Enforcement Administration, Washington, DC 20537, Telephone: (202) 307–7183.

SUPPLEMENTARY INFORMATION: Section 306 of the CSA (21 U.S.C. 826) requires that the Attorney General establish aggregate production quotas for each basic class of controlled substance listed in Schedules I and II. This responsibility has been delegated to the Administrator of the DEA by Section 0.100 of Title 28 of the Code of Federal Regulations. The Administrator, in turn, has redelegated this function to the Deputy Administrator of the DEA pursuant to Section 0.104 of Title 28 of the Code of Federal Regulations.

On July 19, 2000, a notice of the proposed revised 2000 aggregate production quotas for certain controlled substances in Schedules I and II was published in the **Federal Register** (65 FR 44836). All interested parties were invited to comment on or object to these proposed aggregate production quotas on or before August 18, 2000.

Several companies and one individual commented that the revised aggregate production quotas for amphetamine, codeine (for sale), dextropropoxyphene, dihydrocodeine, hydrocodone (for sale), hydromorphone, meperidine, methadone intermediate, methylphenidate, opium, oxycodone (for sale), oxycodone (for conversion), oxymorphone, pentobarbital, phenylacetone, and tetrahydrocannabinols were insufficient to provide for the estimated medical, scientific, research and industrial needs of the United States, for export requirements and for the establishment and maintenance of reserve stocks.

DEA has taken into consideration the above comments along with the relevant 1999 year-end inventories, initial 2000 manufacturing quotas, 2000 export requirements, and actual and projected 2000 sales. Based on this information, the DEA has adjusted the final 2000 aggregate production quotas for 4-methoyxamphetamine, amphetamine, dihydrocodeine, hydromorphone, meperidine, methamphetamine, oxycodone (for sale), oxycodone (for conversion), oxymorphone and pentobarbital to meet the legitimate needs of the United States.

Regarding codeine (for sale), dextropropoxyphene, hydrocodone (for sale), methadone intermediate, opium, methylphenidate, phenylacetone and tetrahydrocannabinols, the DEA has determined that no adjustments of the aggregate production quotas are necessary to meet the 2000 estimated medical, scientific, research and industrial needs of the United States.

Therefore, under the authority vested in the Attorney General by Section 306 of the CSA of 1970 (21 U.S.C. 826), delegated to the Administrator of the DEA by Section 0.100 of Title 28 of the Code of Federal Regulations, and redelegated to the Deputy Administrator pursuant to Section 0.104 of Title 28 of the Code of Federal Regulations, the Deputy Administrator hereby orders that the final 2000 aggregate production quotas for the following controlled substances, expressed in grams of anhydrous acid or base, be established as follows:

Basic class	Established final 2000 quotas
Schedule I:	
2,5-Dimethoxyamphetamine	10,501,000
2,5-Dimethoxy-4-ethylamphetamine (DOET)	2
3-Methylfentanyl	14
3-Methylthiofentanyl	2
3,4-Methylenedioxyamphetamine (MDA)	20
3,4-Methylenedioxy-N-ethylamphetamine (MDEA)	30
3,4-Methylenedioxymethamphetamine (MDMA)	20
3,4,5-Trimethoxyamphetamine	2
4-Bromo-2,5-Dimethoxyamphetamine (DOB)	2
4-Bromo-2,5-Dimethoxyphenethylamine (2 CB)	2
4-Methoxyamphetamine	251,000
4-Methylaminorex	3
4-Methyl-2,5-Dimethoxyamphetamine (DOM)	2
5-Methoxy-3,4-Methylenedioxyamphetamine	2
Acetyl-alpha-methylfentanyl	2
Acetyldihydrocodeine	2
Acetylmethadol	7
Allylprodine	2
Alphacetylmethadol	7
Alpha-ethyltryptamine	2

Basic class	Established final 2000 quotas
Alphameprodine	2
Alphamethadol	2
Alpha-methylfentanyl	2
Alpha-methylthiofentanyl	2
Aminorex	7
Benzylmorphine	2
Betacetylmethadol	2
Beta-hydroxy-3-methylfentanyl	2
Beta-hydroxyfentanyl	2
Betameprodine	2
Betamethadol	2
Betaprodine	2
Bufotenine	2
Cathinone	9
Codeine-N-oxide	2
Diethyltryptamine	2
Difenoxin	10,000
Dihydromorphine	508,000
Dimethyltryptamine	3
Gamma-hydroxybutyric acid	15,000,000
Heroin	2
Hydroxypethidine	2
Lysergic acid diethylamide (LSD)	63
Mescaline	7
Methaqualone	17
Methcathinone	9
Morphine-N-oxide	2
N,N-Dimethylamphetamine	7
N-Ethyl-1-Phenylcyclohexylamine (PCE)	5
N-Ethylamphetamine	7
N-Hydroxy-3,4-Methylenedioxyamphetamine	2
Noracymethadol	2
Norlevorphanol	2
Normethadone	7
Normorphine	7
Para-fluorofentanyl	2
Pholcodine	2
Propiram	415,000
Psilocybin	2
Psilocyn	2
Tetrahydrocannabinols	115,000
Thiofentanyl	2
Trimeperidine	2
Schedule II:	
1-Phenylcyclohexylamine	12
1-Piperidinocyclohexanecarbonitrile (PCC)	10
Alfentanil	8,000
Alphaprodine	2
Amobarbital	12
Amphetamine	10,958,000
Cocaine	251,000
Codeine (for sale)	43,248,000
Codeine (for conversion)	52,384,000
Dextropropoxyphene	121,017,000
Dihydrocodeine	244,000
Diphenoxylate	931,000
Ecgonine	36,000
Ethylmorphine	12
Fentanyl	300,000
Glutethimide	2
Hydrocodone (for sale)	21,417,000
Hydrocodone (for conversion)	20,700,000
Hydromorphone	1,409,000
Isomethadone	12
Levo-alphacetylmethadol (LAAM)	12
Levomethorphan	2
Levorphanol	27,000
Meperidine	10,168,000
Metazocine	1
Methadone (for sale)	8,347,000
Methadone (for conversion)	0
Methadone Intermediate	9,503,000

Basic class	Established final 2000 quotas
Methamphetamine	2,104,000
850,000 grams of levo-desoxyephedrine for use in a non-controlled, non-prescription product; 1,225,000 grams for methamphetamine for conversion to a Schedule III product; and, 29,000 grams for methamphetamine (for sale)	
Methylphenidate	14,957,000
Morphine (for sale)	14,706,000
Morphine (for conversion)	97,410,000
Nabilone	2
Noroxymorphone (for sale)	25,000
Noroxymorphone (for conversion)	3,813,000
Opium	720,000
Oxycodone (for sale)	35,850,000
Oxycodone (for conversion)	602,000
Oxymorphone	353,000
Pentobarbital	24,037,000
Phencyclidine	41
Phenmetrazine	2
Phenylacetone	10
Secobarbital	22
Sufentanil	1,700
Thebaine	45,444,000

The Deputy Administrator further orders that aggregate production quotas for all other Schedules I and II controlled substances included in Sections 1308.11 and 1308.12 of Title 21 of the Code of Federal Regulations remain at zero.

The Office of Management and Budget has determined that notices of aggregate production quotas are not subject to centralized review under Executive Order 12866. This action has been analyzed in accordance with the principles and criteria contained in Executive Order 13132, and it has been determined that this matter does not have sufficient federalism implications to warrant the preparation of a Federalism Assessment.

The Deputy Administrator hereby certifies that this action will have no significant impact upon small entities whose interests must be considered under the Regulatory Flexibility Act, 5 U.S.C. 601 *et seq*. The establishment of aggregate production quotas for Schedules I and II controlled substances is mandated by law and by international treaty obligations. Aggregate production quotas apply to approximately 200 DEA registered bulk and dosage form manufacturers of Schedules I and II controlled substances. The quotas are necessary to provide for the estimated medical, scientific, research and industrial needs of the United States, for export requirements and the establishment and maintenance of reserve stocks. While aggregate production quotas are of primary importance to large manufacturers, their impact upon small entities is neither negative nor beneficial. Accordingly, the Deputy Administrator has determined that this action does not require a regulatory flexibility analysis.

Dated: September 15, 2000.

Julio F. Mercado,

Deputy Administrator.

[FR Doc. 00–24554 Filed 9–22–00; 8:45 am]

BILLING CODE 4410–09–M

DEPARTMENT OF LABOR

Office of the Secretary

Submission for OMB Emergency Review; Comment Request

September 21, 2000.

The Department of Labor has submitted the following (see below) information collection request (ICR), utilizing emergency review procedures, to the Office of Management and Budget (OMB) for review and clearance in accordance with the Paperwork Reduction Act of 1995 (P.L. 104–13, 44 U.S.C. Chapter 35). OMB approval has been requested by October 2, 2000. A copy of this ICR, with applicable supporting documentation, may be obtained by calling the Department of Labor Departmental Clearance Officer, Ira L. Mills ((202) 693–4122).

Comments and questions about the ICR listed below should be forwarded to the Office of Information and Regulatory Affairs, Attn: OMB Desk Officer for Departmental Management, Room 10235, Washington, DC 20503.

The Office of Management and Budget is particularly interested in comments which:

- Evaluate whether the proposed collection of information is necessary for the proper performance of the functions of the agency, including whether the information will have practical utility;
- Evaluate the accuracy of the agency's estimate of the burden of the proposed collection of information, including the validity of the methodology and assumptions used;
- Enhance the quality, utility, and clarify of the information to be collected; and
- Minimize the burden of the collection of information on those who are to respond, including through the use of appropriate automated, electronic, mechanical, or other technological collection techniques or other forms of information technology, *e.g.,* permitting electronic submissions of responses.

Agency: Department of Labor/ Presidential Task Force on the Employment of Adults with Disabilities.

Title: Youth Essay Contest.

OMB Number: 1200–ONew.

Frequency: One time only.

Affected Public: Individuals or households; Not-for-profit institutions.

Number of Respondents: 1,000.

Total Annual Responses: 1,000.

Total Burden Hours: 2,000 hours.

Total Burden Cost (capital/startup): $0.

Total Burden Cost (operating/ maintaining): $0.

Description: In celebration of National Disability Employment Awareness Month in October, the 10th Anniversary of the Americans with Disabilities Act (ADA), and the 25th Anniversary of the Individuals with Disabilities Education Act (IDEA), the Presidential Task Force on the Employment of Adults with Disabilities is sponsoring an essay

contest open to youth of all ages, with and without disabilities.

There will be five award categories: elementary (Grades 1–3 and Grades 4–6); middle (Grades 7–9); secondary (Grades 10–12); and post-secondary (Youth in Transition).

To enter, youth in the elementary and middle school categories will be require to write an essay of up to 250 words, and youth in the secondary and post-secondary categories will be required to write an essay of up to 500 words addressing one of the following questions:

1. Why my life is better because of the ADA?
2. How will the ADA Help to Prepare Me for What I Want to Do When I Grow Up?
3. What Should Be Done to Address Remaining Attitudinal Barriers Toward People with Disabilities?

Classes and teams of children with and without disabilities are encouraged to submit joint entries.

Essays will be judged by the following criteria:

1. Appropriateness of Content.
2. Originality.
3. Clarity.

The deadline for submission of essays is October 15, 2000. Entries are to be submitted electronically to Basha-Rhonda@dol.gov, or mailed or provided in other alternative formats by no later than October 15, 2000 to: Presidential Task Force on the Employment of Adults with Disabilities Essay Contest, 200 Constitution Ave, NW., Rm. S–2220, Washington, DC 20210, Attention: Rhonda Basha.

The top three winners in the elementary and middle school categories will receive $300, $200, and $100 respectively. The top three winners in the secondary and post-secondary categories, will be awarded savings bonds or cash prizes of $500, $400, and $300 respectively. In addition, a gift made in the winner's name will be awarded to the educational institution of the winner's choice in the same denomination. All prize monies will be paid by the Department of Labor's Bequest and Gift Fund.

Winners will be announced on National Disability Mentoring Day, Wednesday, October 25, 2000. Winning entries will be displayed on the disability.gov web page from October 25 until November 25, 2000.

Ira L. Mills,

Departmental Clearance Officer.

[FR Doc. 00–24669 Filed 9–22–00; 8:45 am]

BILLING CODE 4510–23–M

NATIONAL CAPITAL PLANNING COMMISSION

Environmental and Historic Preservation Policies and Procedures

AGENCY: National Capital Planning Commission.

ACTION: Proposed Commission procedure revision.

SUMMARY: The National Capital Planning Commission has prepared a draft of proposed revisions to its current Environmental Policies and Procedures developed in compliance with the National Environmental Policy Act of 1969, as amended, 42 U.S.C. 4321 *et seq.*, and the Council on Environmental Quality's Regulations for Implementing the Procedural Provisions of the National Environmental Policy Act (43 FR 55978–56007). The Commission requests public review and comment on the draft proposed procedures during a 60-day comment period that begins on the date of this notice.

DATES: Submit comments on or before November 24, 2000.

ADDRESSES: All comments should be addressed to: National Capital Planning Commission, Attention: Eugene Keller, 801 Pennsylvania Avenue, NW., Suite 301, Washington, DC 20576. Comments may also be sent by e-mail to eugene@ncpc.gov. Faxes may be sent to (202) 482–7272. All comments will be fully considered.

FOR FURTHER INFORMATION CONTACT: Eugene Keller, Environmental Officer, National Capital Planning Commission, (202) 482–7251 or Mr. Ash Jain, General Counsel, National Capital Planning Commission, (202) 482–7270. A copy of the revised procedures may be requested and is also available at the Commission's Internet website: www.ncpc.gov/what.html.

SUPPLEMENTARY INFORMATION: The Commission has drafted revisions to the agency's environmental and historic policies and procedures. This revised document addresses necessary changes to the Commission's existing requirements, which describe how the National Capital Planning Commission, beginning at the earliest possible point, considers the environmental and historic aspects of proposed actions that it reviews and acts upon, including commemorative works. The revised procedures, when adopted in their final form, would supersede current provisions regarding environmental documentation required by the Commission. The revisions also address National Historic Preservation Act (NHPA), section 106 compliance, pertaining to Commission review and action. Currently, the Commission anticipates final adoption of the proposed revised Environmental and Historic Preservation Policies and Procedures in December 2000.

Dated: September 15, 2000.

Ash Jain,

General Counsel and Congressional Liaison, National Capital Planning Commission.

[FR Doc. 00–24550 Filed 9–22–00; 8:45 am]

BILLING CODE 7520–01–M

NUCLEAR REGULATORY COMMISSION

[Docket Nos. 50–336 and 50–423–LA; ASLBP No. 00–783–09–LA]

Northeast Nuclear Energy Company, Millstone Nuclear Power Station, Unit Nos. 2 and 3; Establishment of Atomic Safety and Licensing Board

Pursuant to delegation by the Commission dated December 29, 1972, published in the **Federal Register**, 37 FR 28,710 (1972), and Sections 2.105, 2.700, 2.702, 2.714, 2.714a, 2.717, 2.721 of the Commission's Regulations, all as amended, an Atomic Safety and Licensing Board is being established to preside over the following proceeding:

Northeast Nuclear Energy Company, Millstone Nuclear Power Station, Unit Nos. 2 and 3

This Board is being established pursuant to the request for hearing submitted by the Connecticut Coalition Against Millstone and the Star Foundation. The request was filed in response to a license amendment request of Northeast Nuclear Energy Company for the Millstone Nuclear Power Station, Unit Nos. 2 and 3. A notice of consideration of the amendment request, proposed no significant hazards consideration determination, and opportunity for hearing was published in the **Federal Register** at 65 FR 48,744, 48,754 (Aug. 9, 2000).

The Board is comprised of the following administrative judges:

Administrative Judge Ann M. Young, Chairman, Atomic Safety and Licensing Board Panel, U.S. Nuclear Regulatory Commission, Washington, D.C. 20555–0001

Administrative Judge Thomas S. Moore, Atomic Safety and Licensing Board Panel, U.S. Nuclear Regulatory Commission, Washington, D.C. 20555–0001

Administrative Judge Charles N. Kelber, Atomic Safety and Licensing Board Panel, U.S. Nuclear Regulatory Commission, Washington, D.C. 20555–0001

All correspondence, documents, and other materials shall be filed with the Judges in accordance with 10 CFR 2.701.

Issued at Rockville, Maryland, this 19th day of September 2000.

G. Paul Bollwerk, III,

Chief Administrative Judge, Atomic Safety and Licensing Board Panel.

[FR Doc. 00–24578 Filed 9–22–00; 8:45 am]

BILLING CODE 7590–01–P

NUCLEAR REGULATORY COMMISSION

Discrimination Task Group; Notice of Meetings

The NRC has formed a Discrimination Task Group, which is evaluating the NRC processes used in the handling of discrimination allegations and violations of employee protection standards (Applicable regulations include 10 CFR 30.7, 10 CFR 40.7, 10 CFR 50.7, 10 CFR 60.9, 10 CFR 61.9, 10 CFR 70.7, 10 CFR 76.7, 10 CFR 72.10, 10 CFR 150.20). The group is a management-level review group which is evaluating the Commission's handling of discrimination cases. The overall objective of the NRC employee protection regulations is to promote an atmosphere where employees feel comfortable raising safety concerns or engaging in other protected activity without fear of reprisal.

The group's overall objective is to develop recommendations for revisions to the regulatory requirements, the enforcement policy or other agency guidelines as appropriate. A Commission Paper will be developed outlining the recommendations for NRC offices to consider in making changes to their processes.

The Task Group is holding several public stakeholder meetings in various areas of the country to solicit input on areas of improvement in the Agency's handling of discrimination issues. In addition to the public meetings held or previously announced the following public meetings have been scheduled:

—A public meeting will be held, on October 5, 2000, at the USNRC Region III offices located 801 Warrenville Road, Lisle, IL 60532. This will be an evening meeting from 7 p.m. to 9 p.m.

—A public meeting will be held, on October 19, 2000, in Paducah, KY, at the Paducah Community College Engineering Building, Crounse Hall Main Lecture Hall, 4810 Alben Barkely Drive, Paducah, KY. This will be an evening meeting from 7 p.m. to 9 p.m.

—A public meeting will be held, on November 1, 2000, in Waterford, CT, at the Waterford Town Hall, 15 Rope Ferry Road. This will be an evening meeting from 7 p.m. to 9 p.m.

These public meetings are open to the members of the public. Oral or written views regarding the NRC's processes for handling employee protection issues may be presented by the members of the public, including members of the nuclear industry. Persons desiring to make prepared oral presentations or statements should notify Mr. Barry Westreich (Telephone 301/415–3456, e-mail BCW@nrc.gov) five days prior to the meeting date, if possible, so that appropriate arrangements can be made to allow necessary time during the meeting for such a presentation or statements. Use of still, motion picture, and television cameras as well as audio recording devices will be permitted during this meeting.

Further information regarding topics of discussion; whether the meeting has been canceled, rescheduled, or relocated; may be obtained by contacting Mr. Barry Westreich between 8 a.m. and 4:30 p.m. EDT.

For those unable to attend one of the public meetings on this issue, comments on the discrimination process can be submitted via the Office of Enforcement web site at *http://www.nrc.gov/OE*. and may also be submitted in writing addressed to Barry Westreich, Office of Enforcement, 11555 Rockville Pike, Rockville, MD 20852.

This meeting will not be transcribed but, if needed, a meeting report will be available electronically for public inspection on the Office of Enforcement Web site at *http://www.nrc.gov/OE* and in the NRC Public Document Room or from the Publicly Available Records (PARS) component of NRC's document system (ADAMS). ADAMS is accessible from the NRC Web site at *http://www.nrc.gov/NRC/ADAMS/index.html* (the Public Electronic Reading Room). The Task Group Charter and other pertinent documents related to Task Group Activities will also be periodically posted and updated on the Office of Enforcement Web site.

Dated at Rockville, Maryland this 19th day of September 2000.

For the Nuclear Regulatory Commission.

Richard W. Borchardt,

Director, Office of Enforcement.

[FR Doc. 00–24579 Filed 9–22–00; 8:45 am]

BILLING CODE 7590–01–P

NUCLEAR REGULATORY COMMISSION

Advisory Committee on the Medical Uses of Isotopes: Meeting Notice

AGENCY: U.S. Nuclear Regulatory Commission.

ACTION: Notice of meeting.

SUMMARY: The U.S. Nuclear Advisory Commission (NRC) will convene a meeting of the Advisory Committee on the Medical Uses of Isotopes (ACMUI) on November 8–9, 2000. The meeting will take place at the address provided below. Topics of discussion will include: (1) The status of the rulemaking of 10 CFR part 35, ''Medical Use of Byproduct Material''; (2) the implementation plan for Part 35; and (3) issues concerning intravascular brachytherapy. An update of other rulemaking activities will be provided. The ACMUI will also discuss: (1) The criteria for ACMUI self-evaluation; (2) NRC's Strategic Plan; and (3) the planning, budget, and performance measures process. All sessions of the meeting will be open to the public, with the exception of the first session, which will be closed to provide required Annual Ethics Training for ACMUI committee members and to discuss information that, if released for public view, would constitute a clearly unwarranted invasion of personal privacy.

DATES: The November 8, 2000, meeting will be held from 9 a.m. to 5 p.m., to accommodate Annual Ethics Training for members from 8 to 9 a.m. The November 9, 2000, meeting will be held from 8 a.m. to 12 p.m.

ADDRESSES: U.S. Nuclear Regulatory Commission, Two White Flint North Auditorium, 11545 Rockville Pike, Rockville, MD 20852–2738.

FOR FURTHER INFORMATION, CONTACT: Betty Ann Torres, telephone (301) 415–0191, e-mail *bat@nrc.gov*, of the Office of Nuclear Material Safety and Safeguards, U.S. Nuclear Regulatory Commission, Washington, DC 20555–0001.

Conduct of the Meeting

Manuel D. Cerqueira, M.D., will chair the meeting. Dr. Cerqueira will conduct the meeting in a manner that will facilitate the orderly conduct of business. The following procedures apply to public participation in the meeting:

1. Persons who wish to provide a written statement should submit reproducible copy to Betty Ann Torres (address previously listed), by November 1, 2000. Statements must

pertain to the topics on the agenda for the meeting.

2. Questions from members of the public will be permitted, during the meeting, at the discretion of the Chairman.

3. The transcript and written comments will be available for inspection, and copying, for a fee, at the NRC Public Document Room, 11555 Rockville Pike, Rockville, MD 20852–27382, telephone (800) 397–4209, on or about December 6, 2000. Minutes of the meeting will be available on or about January 8, 2000.

4. Seating for the public will be on a first-come, first-served basis.

This meeting will be held in accordance with the Atomic Energy Act of 1954, as amended (primarily Section 161a); the Federal Advisory Committee Act (5 U.S.C. App); and the Commission's regulations in Title 10, *U.S. Code of Federal Regulations*, Part 7.

Dated: September 19, 2000.

Andrew L. Bates,

Advisory Committee Management Officer.

[FR Doc. 00–24577 Filed 9–22–00; 8:45 am]

BILLING CODE 7590–01–P

PENSION BENEFIT GUARANTY CORPORATION

Privacy Act of 1974; System of Records

AGENCY: Pension Benefit Guaranty Corporation.

ACTION: Notice of new routine uses of records and technical and clarifying changes for PBGC–6, Plan Participant and Beneficiary Data—PBGC

SUMMARY: The Pension Benefit Guaranty Corporation is proposing two new routine uses of records for a system of records maintained pursuant to the Privacy Act of 1974, as amended, entitled PBGC–6, Plan Participant and Beneficiary Data—PBGC. The first new routine use permits disclosure of certain benefit information to a participant's spouse, former spouse, child, or other dependent of the participant solely to obtain a qualified domestic relations order pursuant to 29 U.S.C. 1056(d) and 26 U.S.C. 414(p). The second new routine use permits disclosure of information from a participant's initial determination under 29 CFR 4003.1(b) to the participant's spouse, former spouse, child, or other dependent who is an alternate payee under a qualified domestic relations order issued pursuant to 29 U.S.C. 1056(d) and 26 U.S.C. 414(p) to explain how the PBGC determined the benefit due the alternate payee so that the alternate payee can pursue an administrative appeal under 29 CFR 4003.51. The PBGC is also making technical and clarifying changes to PBGC–6.

DATES: Comments on the new routine uses must be received by October 25, 2000. The new routine uses will become effective November 9, 2000, without further notice, unless comments result in a contrary determination and a notice is published to that effect.

ADDRESSES: Comments may be mailed to the Office of the General Counsel, Suite 340, Pension Benefit Guaranty Corporation, 1200 K Street, NW., Washington, DC 20005–4026, or delivered to that address between 9 a.m. and 4 p.m. on business days. Comments also may be sent by Internet e-mail to *reg.comments@pbgc.gov*. Comments will be available for public inspection at the PBGC's Communications and Public Affairs Department, Suite 240 at the same address, between 9 a.m. and 4 p.m. on business days.

FOR FURTHER INFORMATION CONTACT: D. Bruce Campbell, Attorney, Office of the General Counsel, Suite 340, Pension Benefit Guaranty Corporation, 1200 K Street, NW., Washington, DC 20005–4026; 202–326–4020 (extension 3672). (For TTY/TDD users, call the federal relay service toll-free at 1–800–877–8339 and ask to be connected to 202–326–4020 (extension 3672).)

SUPPLEMENTARY INFORMATION: Generally, a participant's benefit from a pension plan may not be assigned or alienated. An exception permits certain payments made pursuant to a state domestic relations order that creates or recognizes the right of a spouse, former spouse, child, or other dependent of a participant to receive all or a portion of the benefit payable with respect to the participant to satisfy child support, alimony, or other marital property obligations. This exception only applies if the domestic relations order is qualified, *i.e.,* the plan or the PBGC determines that the order meets certain legal requirements. To be qualified, the domestic relations order must, among other things, specify the name of the plan to which it applies, the amount or percentage of the participant's benefit to be paid to the alternate payee, the form of the payment to the alternate payee, and the date the payment to the alternate payee begins and ends. *See* 29 U.S.C. 1056(d) and 26 U.S.C. 414(p). The PBGC is establishing two new routine uses that permit disclosure of information about a participant to an individual who is or may become entitled to benefits from the PBGC as an alternate payee.

New routine use 12 permits the PBGC to disclose the information needed to obtain a qualified domestic relation order under 29 U.S.C. 1056(d) and 26 U.S.C. 414(p) to a spouse, former spouse, child, or other dependent of a participant. The PBGC will disclose the information only upon the receipt of a notarized, written request by a prospective alternate payee that describes the requester's relationship to the participant and states that the information will be used solely to obtain a qualified domestic relations order under state domestic relations law.

New routine use 13 permits the PBGC to disclose information from a participant's initial determination under 29 CFR 4003.1(b) to the participant's spouse, former spouse, child, or other dependent who is an alternate payee under a qualified domestic relations order issued pursuant to 29 U.S.C. 1056(d) and 26 U.S.C. 414(p). The information explains how the PBGC determined the benefit due the alternate payee so that the alternate payee can pursue an administrative appeal of the benefit determination under 29 CFR 4003.51. The PBGC will not disclose the participant's address, telephone number, social security number, and any sensitive medical information under the new routine use.

The PBGC will notify the participant of the information that is disclosed under the new routine uses.

The PBGC is making certain other technical and clarifying changes to PBGC–6 by updating the citations to its regulations and revising the descriptions of the categories of records in the system and of how records are stored and safeguarded to make them more specific. The PBGC is also revising the description of the purposes for which information is used and how information is retrieved to reflect that the PBGC uses names, addresses and telephone numbers to survey customer satisfaction with the PBGC's benefit payment services and to track (for follow up) those who did not respond to surveys. The PBGC mails surveys to a sample of individuals whose records are maintained in PBGC–6 seeking information about the quality of services provided by the PBGC. Survey responses are aggregated for statistical purposes after they are received by the PBGC and are not retrievable by a participant or beneficiary's name or other assigned identifier.

For the convenience of the public, PBGC–6, as amended, is published in full below with new routine uses 12 and 13 and the technical and clarifying changes italicized.

Issued in Washington, DC, this 19th day of September, 2000.

David M. Strauss,

Executive Director, Pension Benefit Guaranty Corporation.

PBGC–6

SYSTEM NAME:

Plan Participant and Beneficiary Data—PBGC.

SECURITY CLASSIFICATION:

Not applicable.

SYSTEM LOCATION:

Pension Benefit Guaranty Corporation, 1200 K Street, NW., Washington, DC 20005–4026 and/or field benefit administrator, plan administrator, and paying agent worksites.

CATEGORIES OF INDIVIDUALS COVERED BY THE SYSTEM:

Participants and beneficiaries in terminating and terminated pension plans covered by Title IV of the Employee Retirement Income Security Act of 1974, as amended (''ERISA'').

CATEGORIES OF RECORDS IN THE SYSTEM:

Names, addresses, telephone numbers, sex, social security numbers and other Social Security Administration information, dates of birth, dates of hire, salary, marital status, domestic relations orders, time of plan participation, eligibility status, pay status, benefit data, health-related information, insurance information where plan benefits are *provided* by private insurers, initial and final PBGC determinations (29 CFR *4003.21* and *4003.59*). The records listed herein are included only as pertinent or applicable to the individual plan participant or beneficiary.

AUTHORITY FOR MAINTENANCE OF THE SYSTEM:

29 U.S.C. 1055, 1056(d)(3), 1302, 1321, 1322, 1322a, 1341, 1342 and 1350.

PURPOSE(S):

This system of records is maintained for use in determining whether participants and beneficiaries are eligible for benefits under plans covered by Title IV of ERISA, the amounts of benefits to be paid, making benefit payments, and collecting benefit overpayments. *Names, addresses, and telephone numbers are used to survey customers to measure their satisfaction with the PBGC 's benefit payment services and to track (for follow up) those who do not respond to surveys.*

ROUTINE USES OF RECORDS MAINTAINED IN THE SYSTEM, INCLUDING CATEGORIES OF USERS AND THE PURPOSES OF SUCH USES:

1. A record from this system of records may be disclosed to third parties, such as banks, insurance companies, or trustees, to make benefit payments to plan participants and beneficiaries.

2. A record from this system of records may be disclosed, in furtherance of proceedings under Title IV of ERISA, to a contributing sponsor (or other employer who maintained the plan), including any predecessor or successor, and any member of the same controlled group.

3. A record from this system of records may be disclosed, upon request for a purpose authorized under Title IV of ERISA, to an official of a labor organization recognized as the collective bargaining representative of the individual about whom a request is made.

4. Names, addresses, and telephone numbers of participants and beneficiaries and information pertaining to debts owed by such participants and beneficiaries to the PBGC may be disclosed to a debt collection agency or firm to collect a claim. Disclosure shall be made only under a contract that binds any such contractor or employee of such contractor to the criminal penalties of the Privacy Act. The information so disclosed shall be used exclusively pursuant to the terms and conditions of such contract and shall be used solely for the purposes prescribed therein. The contract shall provide that the information so disclosed shall be returned at the conclusion of the debt collection effort.

5. The name and social security number of a participant employed or formerly employed as a pilot by a commercial airline may be disclosed to the Federal Aviation Administration (''FAA'') to obtain information relevant to the participant's eligibility or continued eligibility for disability benefits.

6. Names and social security numbers of plan participants and beneficiaries may be disclosed to the Internal Revenue Service (''IRS'') to obtain current addresses from tax return information and to the Social Security Administration (''SSA'') to obtain current addresses. Such information will be disclosed only if the PBGC has no address for an individual or if mail sent to the individual at the last known address is returned as undeliverable.

7. Names and last known addresses may be disclosed to an official of a labor organization recognized as the collective bargaining representative of participants for posting in union halls or for other means of publication to obtain current addresses of participants and beneficiaries. Such information will be disclosed only if the PBGC has no address for an individual or if mail sent to the individual at the last known address is returned as undeliverable.

8. Names, social security numbers, last known addresses, and dates of birth and death may be disclosed to private firms and agencies that provide locator services, including credit reporting agencies and debt collection firms or agencies, to locate participants and beneficiaries. Such information will be disclosed only if the PBGC has no address for an individual or if mail sent to the individual at the last known address is returned as undeliverable. Disclosure shall be made only under a contract that binds the firm or agency providing the service and its employees to the criminal penalties of the Privacy Act. The information so disclosed shall be used exclusively pursuant to the terms and conditions of such contract and shall be used solely for the purposes prescribed therein. The contract shall provide that the information so disclosed shall be returned at the conclusion of the locating effort.

9. Names and last known addresses may be disclosed to licensees of the United States Postal Service (''USPS'') to obtain current addresses under the USPS's National Change of Address Program. Such information will be disclosed only if the PBGC has no address for an individual or if mail sent to the individual at the last known address is returned as undeliverable. Disclosure shall be made only under a contract that binds the licensee of the Postal Service and its employees to the criminal penalties of the Privacy Act. The information so disclosed shall be used exclusively pursuant to the terms and conditions of such contract and shall be used solely for the purposes prescribed therein. The contract shall provide that the information so disclosed shall be returned at the conclusion of the locating effort.

10. Names and last known addresses may be disclosed to other participants in, and beneficiaries under, a pension plan to obtain the current addresses of individuals. Such information will be disclosed only if the PBGC has no address for an individual or if mail sent to the individual at the last known address is returned as undeliverable.

11. Names and last known addresses of participants and beneficiaries, and the names and addresses of participants' former employers, may be disclosed to the public to obtain current addresses of

the individuals. Such information will be disclosed to the public only if the PBGC is unable to make benefit payments to the participants and beneficiaries because the address it has does not appear to be current or correct.

12. The name of a participant's pension plan, the actual or estimated amount of a participant's benefit under Title IV of ERISA, the form(s) in which the benefit is payable, and whether the participant is currently receiving benefit payments under the plan or (if not) the earliest date(s) such payments could commence may be disclosed to the participant's spouse, former spouse, child, or other dependent solely to obtain a qualified domestic relations order under 29 U.S.C. 1056(d) and 26 U.S.C. 414(p). The PBGC will disclose the information only upon the receipt of a notarized, written request by a prospective alternate payee that describes the requester's relationship to the participant and states that the information will be used solely to obtain a qualified domestic relations order under state domestic relations law. The PBGC will notify the participant of any information disclosed to a prospective alternate payee under this routine use. Any person who knowingly and willfully requests or obtains any record concerning an individual under false pretenses is subject to a criminal penalty under 5 U.S.C. 552a(i)(3).

13. Information from a participant's initial determination under 29 CFR 4003.1(b) (excluding the participant's address, telephone number, social security number, and any sensitive medical information) may be disclosed to a participant's spouse, former spouse, child, or other dependent who is an alternate payee under a qualified domestic relations order issued pursuant to 29 U.S.C. 1056(d) and 26 U.S.C. 414(p) to explain how the PBGC determined the benefit due the alternate payee so that the alternate payee can pursue an administrative appeal of the benefit determination under 29 CFR 4003.51. The PBGC will notify the participant of the information disclosed to an alternate payee under this routine use.

General Routine Uses G1 and G4 through G7 (see Prefatory Statement of General Routine Uses) apply to this system of records.

DISCLOSURE TO CONSUMER REPORTING AGENCIES:

Information may be disclosed to a consumer reporting agency in accordance with 31 U.S.C. 3711(f) (5 U.S.C. 552a(b)(12)).

POLICIES AND PRACTICES FOR STORING, RETRIEVING, ACCESSING, RETAINING, AND DISPOSING OF RECORDS IN THE SYSTEM:

STORAGE:

Records are maintained in paper and electronic form.

RETRIEVABILITY:

Records are indexed by plan and participant and/or beneficiary name. *Customer satisfaction survey responses are aggregated for statistical purposes after they have been received by the PBGC and are not retrievable by a participant or beneficiary's name or other assigned identifier.*

SAFEGUARDS:

Paper records are kept *in file folders* in areas of restricted access that are locked after office hours. *Electronic records are stored on computer networks and protected by assigning user identification numbers to individuals needing access to the records and by passwords set by authorized users that must be changed periodically.*

RETENTION AND DISPOSAL:

Records for plan participants are transferred to the Washington National Federal Records Center 6 months after either the final payment to a participant and/or beneficiary or the PBGC's final determination that a participant or beneficiary is not entitled to any benefits and are destroyed 7 years after such payment or determination.

SYSTEM MANAGER(S) AND ADDRESS:

Director, Insurance Operations Department, Pension Benefit Guaranty Corporation, 1200 K Street, NW., Washington, DC 20005–4026.

NOTIFICATION PROCEDURE:

Procedures are detailed in the PBGC's regulations: 29 CFR part *4902.*

RECORD ACCESS PROCEDURES:

Same as notification procedure.

CONTESTING RECORDS PROCEDURE:

Same as notification procedure.

RECORD SOURCE CATEGORIES:

Plan administrators, participants and beneficiaries, the FAA, the SSA, labor organization officials, firms or agencies providing locator services, and USPS licensees.

EXEMPTIONS CLAIMED FOR THE SYSTEM:

None.

[FR Doc. 00–24527 Filed 9–22–00; 8:45 am]

BILLING CODE 7708–01–P

SECURITIES AND EXCHANGE COMMISSION

[Investment Company Act Release No. 24645]

First American Investment Funds, Inc. and U.S. Bank National Association; Notice of Application

September 19, 2000.

AGENCY: Securities and Exchange Commission (''Commission'').

ACTION: Notice of an application under section 17(b) of the Investment Company Act of 1940 (the ''Act'') for an exemption from section 17(a) of the Act.

SUMMARY OF APPLICATION: Applicants request an order to permit a series of a registered open-end management investment company to acquire all of the assets, subject to the liabilities, of another series of the investment company. Because of certain affiliations, applicants may not rely on rule 17a–8 under the Act.

APPLICANTS: First American Investment Funds, Inc. (''FAIF'') and U.S. Bank National Association (''U.S. Bank'').

FILING DATES: The application was filed on September 11, 2000. Applicants have agreed to file an amendment during the notice period, the substance of which is reflected in this notice.

HEARING OR NOTIFICATION OF HEARING: An order granting the application will be issued unless the Commission orders a hearing. Interested persons may request a hearing by writing to the Commission's Secretary and serving applicants with a copy of the request, personally or by mail. Hearing requests should be received by the Commission by 5:30 p.m. on October 10, 2000 and should be accompanied by proof of service on applicants, in the form of an affidavit, or, for lawyers, a certificate of service. Hearing request should state the nature of the writer's interest, the reason for the request, and the issues contested. Persons who wish to be notified of a hearing may request notification by writing to the Commission's Secretary.

ADDRESSES: Secretary, Commission, 450 Fifth Street, N.W., Washington, D.C. 20549–0609; Applicants: c/o Thomas A. Berreman, Esq., U.S. Bank National Association, U.S. Bank Place, MPFP 2016, 601 Second Avenue South, Minneapolis, MN 55402.

FOR FURTHER INFORMATION CONTACT: Deeptak T. Pai, Senior Counsel, at (202) 942–0574 or Janet M. Grossnickle, Branch Chief, at (202) 942–0564, (Division of Investment Management, Office of Investment Company Regulation).

SUPPLEMENTARY INFORMATION: The following is a summary of the application. The complete application may be obtained for a fee at the Commission's Public Reference Branch, 450 Fifth Street, N.W., Washington, D.C. 20549–0102 (telephone (202) 942–8090).

Applicants' Representation

1. FAIF, a Maryland corporation, is registered under the Act as an open-end management investment company and is currently comprised of thirty series, including the International Index Fund (the ''Acquired Fund'') and the International Fund (the ''Acquiring Fund'' and together with the Acquired Fund, the ''Funds'').

2. U.S. Bank is the investment adviser for the Funds. U.S. Bank is a national banking association and currently is exempt from registration as an investment adviser under the Investment Advisers Act of 1940 (the ''Advisers Act''). The Acquiring Fund is subadvised by Marvin & Palmer Associates, Inc. (the ''Subadviser'') which is a registered investment adviser under the Advisers Act. The Subadviser is not an affiliated person of U.S. Bank.

3. U.S. Bank is a wholly-owned subsidiary of U.S. Bankcorp, a publicly-owned multistate bank holding company. U.S. Bank Trust National Association (''U.S. Bank Trust'' and together with U.S. Bank and any entity controlling, controlled by, or under common control (within the meaning of section 2(a)(9) of the Act) with U.S. Bank, ''U.S. Bancorp Affiliates'') is also a wholly-owned subsidiary of U.S. Bancorp. U.S. Bancorp Affiliates, directly or through a nominee, are record holders of more than 5% (and in the case of the Acquiring Fund, more than 25%) of the outstanding shares of each of the Funds, and they hold or share voting power and/or investment discretion with respect to a portion of these shares, or have a funding obligation to defined benefit plans which own 25% or more of the outstanding shares of the Acquired Fund. The Fund shares held of record by U.S. Bancorp Affiliates are held for the benefit of others in a trust, agency, custodial or other fiduciary or representative capacity.

4. On May 18, 2000, the board of directors of FAIf (the ''Board''), including all of the directors who are not ''interested persons'' as defined in section 2(a)(19) of the Act (''Independent Directors''), unanimously approved the proposed reorganization of the Acquired Fund with and into the Acquiring Fund (the ''Reorganization Agreement'' and the transaction, the ''Reorganization''). The Reorganization is expected to occur on or about October 13, 2000. The Reorganizaion Agreement provides for: (a) the transfer of all of the assets and liabilities of the Acquired fund to the Acquiring Fund in exchange for shares of designated classes of the Acquiring Fund; and (b) the distribution of these Acquiring Fund shares to the shareholders of the Acquired Fund in liquidation of the Acquired Fund. In the Reorganization, Acquired fund shareholders will receive Acquiring Fund shares of the class which corresponds to that of their class of Acquired Fund shares, and which have an aggregate net asset value equal, at the effective time of the Reorganization (the ''Effective Time''), to the aggregate net asset value of their Acquired Fund shares. As soon as practicable after the Effective Time, the Acquired Fund will distribute these shares pro rata to its share holders of record, determined as of the Effective Time, and will liquidate. The value of the assets of the Funds will be determined in the manner set forth in the Funds' then current prospectuses and statements of additional information.

5. Applicants state that the investment objectives, policies, and restrictions of the Acquired Fund are similar to those of the Acquiring Fund. Each of the Funds ha four classes of shares. The classes of shares of the Acquiring Fund to be issued in the Reorganization are subject to the identical distribution fees and charges as the Acquired Fund. For purposes of calculating any contingent deferred sales charges, the Acquired Fund shareholders will be deemed to have held shares of the Acquiring Fund since the date the shareholders initially purchased the shares of the Acquired Fund. No sales charge will be imposed upon the Acquired Fund shareholders in connection with the Reorganization.

6. The Board found that the Reorganization is in the best interests of each of the Funds and their shareholders and that the interests of existing shareholders of the Funds will not be diluted as a result of the Reorganization. The Board considered among other things: (a) The advantages which may be realized by the Acquired Fund, consisting of the potential for enhanced investment performance; (b) the Reorganization is a way to avoid significant adverse tax consequences to the Acquired Fund shareholders in the event that the defined benefit plans exchanged acquired Fund shares for Acquiring Fund shares; (c) the tax-free nature of the Reorganization; (d) the terms and conditions of the Reorganization Agreement; and (e) the agreement of U.S. Bank to bear the costs associated with the Reorganization.

7. The Reorganization is subject to a number of conditions precedent, including: (a) approval of the Reorganization Agreement by the shareholders of the Acquired Fund; (b) the receipt of an opinion of counsel with respect to the tax-free nature of the Reorganization; (c) the receipt of certain certificates from the parties concerning the continuing accuracy of the representations and warranties in the Reorganization Agreement; (d) the receipt of exemptive relief from the Commission; and (e) the parties' performance in all material respects of their respective agreements and undertaking in the Reorganization Agreement. The Reorganization Agreement provides that the Reorganization may be abandoned at any time prior to the Effective Time upon the mutual consent of the Funds, or if determined by the Board that proceeding with the Reorganization is inadvisable. Applicants agree not to make any material changes to the Reorganization Agreement without prior approval of the Commission.

8. A registration statement on Form N–14, containing a combined prospectus/proxy statement, was filed with the Commission on July 3, 2000 and was mailed to shareholders of the Acquired Fund on August 10, 2000. The Reorganization was approved by the shareholders on September 15, 2000.

Applicants' Legal Analysis

1. Section 17(a) of the Act generally prohibits an affiliated person of a registered investment company, or an affiliated person of such a person, acting as principal, form selling any security to, or purchasing any security from, the company. Section 2(a)(3) for the Act defines an ''affiliated person'' of another person to include (a) any person directly or indirectly owning, controlling, or holding with power to vote 5% or more of the outstanding voting securities of the other person; (b) any person 5% or more of whose securities are directly or indirectly owned, controlled, or held with power to vote by the other person; (c) any person directly or indirectly controlling, controlled by, or under common control with the other person; and (d) if the other person is an investment company, any investment adviser of that company. Applicants state that the Funds may be deemed affiliated persons and thus the Reorganization may be prohibited by section 17(a).

2. Rule 17a–8 under the Act exempts from the prohibitions of section 17(a) mergers, consolidations, or purchases or

sales of substantially all of the assets of registered investment companies that are affiliated persons, or affiliated persons of an affiliated person, solely by reason of having a common investment adviser, common directors, and/or common officers, provided that certain conditions are satisfied.

3. Applicants state that they may not rely on rule 17a–8 because the Funds may be deemed to be affiliated for reasons other than those set forth in the rule. U.S. Bancorp Affiliates hold a record 5% or more of the outstanding shares of each of the Funds, and hold or share voting power and/or investment discretion with respect to a portion of these shares, or have a funding obligation to defined benefit plans which own 5% or more of the outstanding shares of the Acquired Fund.

4. Section 17(b) of the Act provides that the Commission may exempt a transaction from the provisions of section 17(a) if the evidence establishes that the terms of the proposed transaction, including the consideration to be paid, are reasonable and fair and do not involve overreaching on the part of any person concerned, and that the proposed transaction is consistent with the policy of each registered investment company concerned and with the general purposes of the Act.

5. Applicants request an order under section 17(b) of the Act exempting them from section 17(a) of the Act to the extent necessary to permit applicants to complete the Reorganization. Applicants submit that the Reorganization satisfies the standards of section 17(b) of the Act. Applicants state that the Board has found that participation in the Reorganization Agreement is in the best interests of each Fund and its shareholders, and that the interests of the existing shareholders will not be diluted as a result of the Reorganization. In addition, applicants state that the exchange of Acquired Fund shares for Acquiring Fund shares will be based on net asset value.

For the Commission, by the Division of Investment Management, under delegated authority.

Margaret H. McFarland,

Deputy Secretary.

[FR Doc. 00–24546 Filed 9–22–00; 8:45 am]

BILLING CODE 8010–01–M

SECURITIES AND EXCHANGE COMMISSION

[Investment Company Act Release No. 24646; 812–10518]

Seasons Series Trust, et al.; Notice of Application

AGENCY: Securities and Exchange Commission (''SEC'' or ''Commission'').

ACTION: Notice of application for an order under section 12(d)(1)(J) of the Investment Company Act of 1940 (''Act'') for an exemption from sections 12(d)(1)(A) and (B) of the Act and under sections 6(c) and 17(b) of the Act for an exemption from section 17(a) of the Act.

SUMMARY OF THE APPLICATION: The order would permit certain registered unit investment trusts or open-end management investment companies to acquire shares of registered open-end management investment companies both within and outside the same group of investment companies.

APPLICANTS: Seasons Series Trust (''Seasons''), Variable Annuity Account Five (''Account''), Anchor National Life Insurance Company (''Anchor''), First SunAmerica Life Insurance Company (''SunAmerica,'' together with Anchor, the ''Insurance Companies''), and SunAmerica Asset Management Corp. (''Adviser'').

FILING DATES: The application was filed on February 4, 1997, and amended on September 12, 2000.

HEARING OR NOTIFICATION OF HEARING: An order granting the application will be issued unless the Commission orders a hearing. Interested persons may request a hearing by writing to the commission's Secretary and serving applicants with a copy of the request, personally or by mail. Hearing requests should be received by the Commission by 5:30 p.m. on October 16, 2000, and should be accompanied by proof of service on applicants in the form of an affidavit or, for lawyers, a certificate of service. Hearing requests should state the nature of the writer's interest, the reason for the request, and the issues contested. Persons who wish to be notified of a hearing may request notification by writing to the Commission's Secretary.

ADDRESSES: Secretary, Commission, 450 Fifth Street, NW., Washington, DC 20549–0609.

APPLICANTS: Seasons, Account, and Anchor, One SunAmerica Center, Los Angeles, CA 90067–6022; SunAmerica and Adviser, the SunAmerica Center, 733 Third Avenue, New York, NY 10017–3204.

FOR FURTHER INFORMATION CONTACT: Michael W. Mundt, Branch Chief, and Nadya B. Roytblat, Assistant Director, at (202) 942–0564 (Office of Investment Company Regulation, Division of Investment Management).

SUPPLEMENTARY INFORMATION: The following is a summary of the application. The complete application may be obtained for a fee at the Commission's Public Reference Branch, 450 Fifth Street, NW, Washington, DC 20549–0102, (202) 942–8090.

Applicants' Representations

1. The Account, a unit investment trust registered under the Act, is a separate account of Anchor consisting of sixteen subaccounts. Seasons, an open-end management investment company registered under the Act, serves as a funding medium for variable annuity contracts offered through the Account and currently consists of sixteen series. Applicants state that the Account and Seasons are part of the ''same group of investment companies,'' as that term is defined in section 12(d)(1)(G) of the Act (the ''SunAmerica Group''). The Adviser, an investment adviser registered under the Investment Advisers Act of 1940, serves as investment adviser to Seasons and is an indirect, wholly-owned subsidiary of Anchor. The Insurance Companies are indirect, wholly-owned subsidiaries of American International Group, Inc.

2. Applicants request relief to permit the Account to invest (a) in series of Seasons and other registered open-end management investment companies that are part of the SunAmerica Group (''Affiliated Funds''), and (b) in other registered open-end management investment companies that are not part of the SunAmerican Group (''Unaffiliated Funds,'' and together with the Affiliated Funds, the ''Underlying Funds''). Applicants request that the relief also apply to (a) any future separate account that is registered under the Act as a unit investment trust (together with the Account, each a ''Trust of Funds'') and is established by the Insurance Companies or another insurance Company that is in control of, controlled by, or under common control with the Insurance Companies (each, a ''Sponsor'') and (b) any future separate account that is registered under the Act as an open-end management investment company and is established by the Insurance Companies or another insurance company that is in control of, controlled by, or under common control with the Insurance Companies, or any open-end management investment company registered under the Act that is not a separate account but is within

the SunAmerica Group (each a ''Fund of Funds'').[1] The Trusts of Funds and Funds of Funds are each an ''Acquiring Company,'' and collectively, the ''Acquiring Companies.''

3. Applicants state that the requested relief will enable the Account to offer investors the potential for additional diversification among an expended universe of mutual funds available as investment options under variable annuity contracts.

Applicants' Legal Analysis

A. Section 12(d)(1)

1. Section 12(d)(1)(A) of the Act prohibits a registered investment company from acquiring shares of an investment company if the securities represent more than 3% of the total outstanding voting stock of the acquired company, more than 5% of the total assets of the acquiring company, or, together with the securities of any other investment companies, more than 10% of the total assets of the acquiring company. Section 12(d)(1)(B) of the Act prohibits a registered open-end investment company from selling its shares to another investment company if the sale will cause the acquiring company to own more than 3% of the acquired company's voting stock, or if the sale will cause more than 10% of the acquired company's voting stock to be owned by investment companies generally.

2. Section 12(d)(1)(G) provides, in relevant part, that section 12(d)(1) will not apply to securities of a registered open-end investment company acquired by a registered open-end investment company or registered unit investment trust if the acquired company and the acquiring company are part of the same group of investment companies, provided that certain other requirements contained in section 12(d)(1)(G) are met. Applicants state that they may not rely on section 12(d)(1)(G) because an Acquiring Company will invest in Unaffiliated Funds in addition to Affiliated Funds.

3. Section 12(d)(1)(J) of the Act provides that the Commission may exempt any person, security, or transaction, or any class or classes of persons, securities or transactions, from any provision of section 12(d)(1) if the exemption is consistent with the public interest and the Acquiring Company to acquire shares of an Underlying Fund and to permit an Underlying Fund to sell shares to an Acquiring Company beyond the limits in sections 12(d)(1)(A) and (B).

4. Applicants state that the proposed arrangement will not give rise to the policy concerns underlying sections 12(d)(1) (A) and (B), which include concerns about undue influence by a fund or funds over underlying funds, excessive layering of fees, and overly complex fund structures. Accordingly, applicants believe that the requested exemption is consistent with the public interest and the protection of investors.

5. Applicants state that the proposed arrangement will not result in undue influence by an Acquiring Company or its affiliates under Underlying Funds. To limit the control that an Acquiring Company may have over an Unaffiliated Fund, applicants propose a condition prohibiting the Sponsor or Adviser, the Acquiring Company, and certain affiliates (individually or in the aggregate) from controlling an Unaffiliated Fund within the meaning of section 2(a)(9) of the Act. To limit further the potential for undue influence over Unaffiliated Funds, applicants propose conditions 2 through 7, stated below to preclude an Acquiring Company and its affiliated entities from taking advantage of an Unaffiliated Fund with respect to transactions between the entities and to ensure that transactions will be on an arm's length basis.

6. As an additional assurance that an Unaffiliated Fund understands the implications of an investment by an Acquiring Company under the requested order, an Acquiring Company and Unaffiliated Fund will execute an agreement prior to the investment stating that the Unaffiliated Fund understands the terms and conditions of the order and agrees to fulfill its responsibilities under the order. Applicants note that an Unaffiliated Fund may choose to reject an investment from the Acquiring Company.

7. Applicants do not believe that the proposed arrangement will involve excessive layering of fees. With respect to any investment in an Underlying Fund by an Acquiring Company that is not a separate account, the aggregate sales charges, distribution-related fees and/or service fees of an Acquiring Company and the Underlying Fund will not exceed the limits set forth in rule 2830 of the Conduct Rules of the National Association of Securities Dealers (''NASD Conduct Rules''). Applicants represent that the fees and charges of an Acquiring Company that is a separate account and its Underlying Funds, in the aggregate, will be reasonable in relation to the services rendered, expenses to be incurred, and risks assumed by the Sponsor.

8. In addition, applicants note that a Trust of Funds, as a unit investment trust, would not pay an advisory fee, and that a Fund of Funds would be subject to a condition under which the board of directors of the Fund of Funds, including a majority of the disinterested directors, would be required to determine that the advisory fees charged to the Fund of Funds are based on services that are in addition to the services provided under the advisory contract of any Underlying Fund. Pursuant to another condition to the order, the Adviser to a Fund of Funds or trustee or depositor of a Trust of Funds will waive or offset fees otherwise payable by the Acquiring Company to the Adviser or trustee or depositor in an amount at least equal to any compensation (including fees paid pursuant to a plan adopted by an Unaffiliated Fund under rule 12b–1 under the Act (''12b–1 Fees'')) received by the Adviser or trustee or depositor, or an affiliated person of the Adviser or trustee or depositor, from an Unaffiliated Fund in connection with the investment by an Acquiring Company in the Unaffiliated Fund.

9. Applicants state that the proposed arrangement will not create an overly complex fund structure. Applicants note that an Underlying Fund will be prohibited from acquiring securities of any investment company in excess of he limits contained in section 12(d)(1)(A). Applicants also represent that an Acquiring Company's prospectus and sales literature will contain concise, ''plain English'' disclosure designed to inform investors of the unique characteristics of the Acquiring Company's structure, including, but not limited to, its expense structure and the additional expenses of investing in Underlying Funds.

B. Section 17(a)

1. Section 17(a) of the Act generally prohibits sales or purchases of securities between a registered investment company and any affiliated person of the company. Section 2(a)(3) of the Act defines an ''affiliated person'' of another person to include (a) any person directly or indirectly owning, controlling, or holding with power to vote, 5% or more of the outstanding voting securities of the other person; (b) any person 5% or more of whose outstanding voting securities are directly or indirectly owned, controlled, or held with power to vote by the other person; and (c) any person directly or indirectly controlling,

[1] All investment companies that currently intend to rely on the requested order are named as applicants Any other investment company that relies on the order in the future will comply with the terms and conditions of the application.

controlled by, or under common control with the other person.

2. Applicants state that a Fund of Funds and Affiliated Funds might be deemed to be under the common control of the Adviser. Applicants also state that an Acquiring Company and an Underlying Fund might become affiliated persons if the Acquiring Company acquires more than 5% of the Underlying Fund's outstanding voting securities. In light of these possible affiliation, section 17(a) could prevent an Underlying Fund from selling shares to and redeeming shares from an Acquiring Company.

3. Section 17(b) of the Act authorizes the Commission to grant an order permitting a transaction otherwise prohibited by section 17(a) if it finds that (a) the terms of the proposed transaction are fair and reasonable and do not involve overreaching on the part of any person concerned; (b) the proposed transaction is consistent with the policies of each registered investment company involved; and (c) the proposed transaction is consistent with the general purposes of the Act. Section 6(c) of the Act permits the Commission to exempt any person or transactions from any provision of the Act if such exemption is necessary or appropriate in the public interest and consistent with the protection of investors and the purposes fairly intended by the policy and provisions of the Act.

4. Applicants submit that the proposed arrangement satisfies the standards for relief under sections 17(b) and 6(c) of the Act. Applicants state that the terms of the arrangement are fair and reasonable and do not involve overreaching. Applicants note that the consideration paid for the sale and redemption of shares of the Underlying Funds will be based on the net asset values of the Underlying Funds. Applicants state that the proposed arrangement will be consistent with the policies of each Acquiring Company and Underlying Fund and with the general purposes of the Act.

Applicants' Conditions

Applicants agree that the requested order will be subject to the following conditions:

1. (a) The Sponsor or Adviser, (b) any person controlling, controlled by, or under common control with the Sponsor or Adviser, and (c) any investment company and any issuer that would be an investment company but for section 3(c)(1) or section 3(c)(7) of the Act sponsored by the Sponsor or advised by the Adviser or by any person controlling, controlled by, or under common control with the Sponsor or Adviser (collectively, the ''Group'') will not control (individually or in the aggregate) an Unaffiliated Fund within the meaning of section 2(a)(9) of the Act. If, as a result of a decrease in the outstanding voting securities of an Unaffiliated Fund, the Group, in the aggregate, becomes a holder of more than 25% of the outstanding voting securities of the Unaffiliated Fund, the Group (except for any member of the Group that is a separate account of the Insurance Companies registered under the Act (''Separate Account'')) will vote its shares of the Unaffiliated Fund in the same proportion as the vote of all other holders of the Unaffiliated Fund's shares. A Separate Account will seek voting instructions from its contractholders and vote its shares in accordance with the instructions received and will vote those shares for which no instructions were received in the same proportion as the shares for which instructions were received.

2. An Acquiring Company and its Sponsor or Adviser, promoter, and principal underwriter, and any person controlling, controlled by, or under common control with any of those entities (each an ''Acquiring Company Affiliate'') will not cause any existing or potential investment by the Acquiring Company in shares of an Unaffiliated Fund to influence the terms of any services or transactions between the Acquiring Company or an Acquiring Company Affiliate and the Unaffiliated Fund or its investment adviser, promoter, and principal underwriter, and any person controlling, controlled by, or under common control with any of those entities (each an ''Unaffiliated Fund Affiliate'').

3. The board of directors of a Fund of Funds, including a majority of the disinterested directors, will adopt procedures reasonably designed to assure that the Adviser is conducting the investment program of the Fund of Funds without taking into account any consideration received by the Fund of Funds or an Acquiring Company Affiliate from an Unaffiliated Fund or an Unaffiliated Fund Affiliate in connection with any services or transactions.

4. Once an investment by an Acquiring Company in the securities of an Unaffiliated Fund exceeds the limits of section 12(d)(1)(A)(i) of the Act, the board of directors of the Unaffiliated Fund, including a majority of the disinterested directors, will determine that any consideration paid by the Unaffiliated Fund to an Acquiring Company or an Acquiring Company Affiliate in connection with any services or transactions: (a) Is fair and reasonable in relation to the nature and quality of the services and benefits received by the Unaffiliated Fund; (b) is within the range of consideration that the Unaffiliated Fund would be required to pay to another unaffiliated entity in connection with the same services or transactions; and (c) does not involve overreaching on the part of any person concerned.

5. No Acquiring Company or Acquiring Company Affiliate will cause an Unaffiliated Fund to purchase a security from any underwriting or selling syndicate in which a principal underwriter is an officer, director, member of an advisory board, investment adviser, employee, or sponsor of the Acquiring Company, or a person of which any such officer, director, member of an advisory board, investment adviser, employee, or sponsor is an affiliated person (each an ''Underwriting Affiliate''). An offering during the existence of an underwriting or selling syndicate of which a principal underwriter is an Underwriting Affiliate is considered an ''Affiliated Underwriting.''

6. The board of directors of an Unaffiliated Fund, including a majority of the disinterested directors, will adopt procedures reasonably designed to monitor any purchases by the Unaffiliated Fund of securities in Affiliated Underwritings once an investment by an Acquiring Company in the securities of the Unaffiliated Fund exceeds the limits of section 12(d)(1)(A)(i) of the Act, including any purchases made directly from an Underwriting Affiliate. The board of directors will review these purchases periodically, but no less frequently than annually, to determine whether the purchases were influenced by the investment by the Acquiring Company in shares of the Unaffiliated Fund. The board of directors should consider, among other things, (a) whether the purchases were consistent with the investment objectives and policies of the Unaffiliated Fund; (b) how the performance of securities purchased in an Affiliated Underwriting compares to the performance of comparable securities purchased during a comparable period of time in underwritings other than Affiliated Underwritings or to a benchmark such as a comparable market index; and (c) whether the amount of securities purchased by the Unaffiliated Fund in Affiliated Underwritings and the amount purchased directly from Underwriting Affiliates have changed significantly from prior years. The board of directors shall take any appropriate

actions based on its review, including, if appropriate, the institution of procedures designed to assure that purchases of securities from Affiliated Underwritings are in the best interests of shareholders.

7. The Unaffiliated Fund shall maintain and preserve permanently in an easily accessible place a written copy of the procedures described in the preceding condition, and any modifications, and shall maintain and preserve for a period not less than six years from the end of the fiscal year in which any purchase from an Affiliated Underwriting occurred, the first two years in an easily accessible place, a written record of each purchase made once an investment by an Acquiring Company in the securities of an Unaffiliated Fund exceeds the limits of section 12(d)(1)(A)(i) of the Act, setting forth from whom the securities were acquired, the identity of the underwriting syndicate's members, the terms of the purchase, and the information or materials upon which the board's determinations were made.

8. Prior to an investment in an Unaffiliated Fund in excess of the limit in section 12(d)(1)(A)(i), the Acquiring Company and the Unaffiliated Fund will execute an agreement stating, without limitation, that the Unaffiliated Fund understands the terms and conditions of the order and agrees to fulfill its responsibilities under the order. At the time of its investment in shares of an Unaffiliated Fund in excess of the limit in section 12(d)(1)(A)(i), an Acquiring Company will notify the Unaffiliated Fund of the investment. At such time, the Acquiring Company also will transmit to the Unaffiliated Fund a list of the names of each Acquiring Company Affiliate and Underwriting Affiliate. The Acquiring Company will notify the Unaffiliated Fund of any changes to the list as soon as reasonably practicable after a change occurs. The Unaffiliated Fund and the Acquiring Company will maintain and reserve a copy of the order, the agreement, and the list with any updated information for a period not less than 6 years from the end of the fiscal year in which any investment occurred, the first 2 years in an easily accessible place.

9. Prior to approving any advisory contract under section 15 of the Act, the board of directors of each Fund of Funds, including a majority of the disinterested directors, must find that the advisory fees charged under the contract are based on services that are in addition to, rather than duplicative of, services provided to Underlying Funds in which the Fund of Funds will invest. This finding and the basis upon which the finding was made, will be recorded fully in the minute books of the Fund of Funds.

10. The Adviser to a Fund of Funds or trustee or depositor of a Trust of Funds will waive or offset fees otherwise payable by the Acquiring Company to the Adviser or trustee or depositor in an amount at least equal to any compensation (included 12b–1 Fees) received by the Adviser or trustee or depositor, or an affiliated person of the Adviser or trustee or depositor, from an Unaffiliated Fund in connection with the investment by an Acquiring Company in the Unaffiliated Fund.

11. With respect to any investment in an Underlying Fund by an Acquiring Company that is not a separate account, any sales charges, distribution-related fees, and/or services fees charged with respect to shares of an Acquiring Company, when aggregated with any sales charges, distribution-related fees, and/or service fees paid by the Acquiring Company with respect to its acquisition, holding, or disposition of shares of an Underlying Fund, will not exceed the limits set forth in rule 2830 of the NASD Conduct rules.

12. No Underlying Fund will acquire securities of any other investment company in excess of the limits contained in section 12(d)(1)(A) of the Act.

For the SEC, by the Division of Investment Management, pursuant to delegated authority.

Margaret H. McFarland,

Deputy Secretary.

[FR Doc. 00–24547 Filed 9–22–00; 8:45 am]

BILLING CODE 8010–01–M

SECURITIES AND EXCHANGE COMMISSION

[Release No. 34–43250; File No. SR–CBOE–00–37]

Self-Regulatory Organizations; Notice of Filing and Order Granting Partial Accelerated Approval of Proposed Rule Change by the Chicago Board Options Exchange, Inc. Relating to the Reporting of Options Transactions

September 6, 2000.

Pursuant to Section 19(b)(1) of the Securities Exchange Act of 1934 (''Act''),[1] and Rule 19b–4 thereunder,[2] notice is hereby given that on August 11, 2000, the Chicago Board Options Exchange, Inc. (''CBOE'' or the ''Exchange'') filed with the Securities and Exchange Commission (''SEC'' or ''Commission'') the proposed rule change relating to the reporting of options transactions. The CBOE filed Amendment No. 1 to the proposed rule change on August 23, 2000.[3] On September 6, 2000, the CBOE filed Amendment No. 2 to the proposed rule change.[4] The proposed rule change, as amended, is described in Items I, II, and III below, which Items have been prepared by the Exchange. The Commission is publishing this notice to solicit comments on the proposed rule change from interested persons and to grant partial accelerated approval to that portion of the proposal that amends CBOE Rule 6.51.

Self-Regulatory Organization's Statement of the Terms of Substance of the Proposed Rule Change

The Exchange proposes to amend CBOE Rule 6.51, ''Reporting Duties,'' to require the reporting of options transactions within 90 seconds. In addition, the proposed rule change would amend CBOE Rule 17.50, which set forth the CBOE's minor rule violation find plan. The text of the proposed rule change, as amended, follows. New text is italicized and deleted text is bracketed.

Chicago Board Options Exchange, Incorporated Rules

* * * * *

Chapter VI—Doing Business on the Exchange Floor

* * * * *

Section C: Trading Practices and Procedures

Rule 6.51. Reporting Duties

(a) Designated member must report transaction. *(i)* A participant in each transaction to be designated by the Exchange [shall immediately] *must* report *or ensure* the transaction *is reported* to the Exchange within 90 seconds of the execution in a form and manner prescribed by the Exchange so that the trade information may be reported to

[1] 15 U.S.C. 78s(b)(1).

[2] 17 CFR 240.19b–4.

[3] *See* letter from Jaime Galvan, Attorney, Legal Division, CBOE to Deborah Flynn, Senior Special Counsel, Division of Market Regulation (''Division''), Commission, dated August 22, 2000 (''Amendment No. 1''). Amendment No. 1 moves certain proposed language from Interpretation and Policy .01 of CBOE Rule 6.51 to the body of CBOE Rule 6.51. The CBOE also requested accelerated approval of the portion of the proposal that amended CBOE Rule 6.51.

[4] *See* letter from Jaime Galvan, Attorney, Legal Division, CBOE to Deborah Flynn, Senior Special Counsel, Division, Commission, dated September 5, 2000 (''Amendment No. 2''). In Amendment No. 2, the CBOE confirmed that the failure to report an options transaction within 90 seconds of execution would be considered a violation of CBOE Rule 6.51. Amendment No. 2 also deletes footnote 5 to Exhibit 1, which defined the term ''offense'' for purposes of CBOE Rule 17.50(g)(4) as the first instance that a pattern or practice of late reporting or failure to report has been determined. In Amendment No. 2, the Exchange proposes to add a similar footnote to the text of CBOE Rule 17.50(g)(4).

time and sales reports. *(ii) Transactions not reported within 90 seconds after execution in accordance with Rule 6.51(a)(i) shall be designated as late. A pattern or practice of late reporting without exceptional circumstances may be considered conduct inconsistent with just and equitable principles of trade and subject to summary fine under Rule 17.50 or to discipline by the Business Conduct Committee.*

(b)–(d) Unchanged.

Chapter XVII—Discipline

* * * * *

Rule 17.50. Imposition of Fines for Minor Rule Violations

(a) Unchanged.

(b) In any action taken by the Exchange pursuant to this Rule, any person against whom a fine is imposed shall be served, as provided in Exchange Rule 17.12, with a written statement, prepared by the Exchange, setting forth: (i) the rule(s) allegedly violated; (ii) the act or omission constituting each such violation; (iii) the fine imposed for each violation; and (iv) the date by which such determination becomes final and such fine must be paid or contested as provided below, which date shall be not less than thirty (30) days after the date of service of such written statement. [A copy of such written statement shall be sent contemporaneously to the Clearing Member previously designated by the person fined pursuant to Exchange Rule 3.23.]

(c)(1) Any person against whom a fine is imposed pursuant to subsection (g)(1), (g)(2), (g)(3), (g)(4), [(g)(5),] *or* (g)(8) [or (g)(9)] of this Rule and any person against whom a fine exceeding $2,500 is imposed pursuant to subsection (g)[(6)] (*5*) of this Rule may contest the Exchange's determination by filing with the Office of the Secretary of the Exchange, on or before the date specified pursuant to subsection (b)(iv) of this Rule, a written answer as provided in Exchange Rule 17.5, at which point the matter shall become subject to review by the Business Conduct Committee. The filing must include a request for a hearing, if a hearing is desired. Hearings will be conducted in accordance with the provisions of Exchange Rule 17.6. If a hearing is not requested, the review will be based on written submissions and will be conducted in a manner to be determined by the Business Conduct Committee.

(2)–(4) Unchanged.

(d)(1) Any person against whom a fine not exceeding $2,500 is imposed pursuant to subsection (g)[(6)](*5*) of this Rule and any person against whom a fine is imposed pursuant to subsection (g)[(7)](*6*) of this Rule may contest the Exchange's determination by filing with the Secretary of the Exchange, on or before the date specified pursuant to subsection (b)(iv) of this Rule, a written application in accordance with the provisions of Exchange Rule 19.2(a), at which point the matter shall become subject to review by the Appeals Committee. The application must include a request for a hearing, if a hearing is desired. Except as otherwise provided herein, the procedures applicable to such an appeal shall be governed by Chapter 19. Any petitions for an extension of time in which to file an application must comply with and shall be governed by the provisions of Exchange Rule 19.2, and any such petition must be filed with the Secretary of the Exchange on or before the date specified pursuant to subsection (b)(iv) of this Rule in order to be eligible for consideration. Procedures applicable to all other time limit extensions shall be governed by Exchange Rule 19.6(b). Hearings will be conducted in accordance with the provisions of Exchange Rules 19.3 and 19.4. If a hearing is not requested, the review will be based on written submissions and will be conducted in a manner to be determined by the Appeals Committee.

(2)–(4) Unchanged.

(e)–(f) Unchanged. (g)

(1)–(3) Unchanged.

(4) Failure to submit accurate trade information *and failure to submit trade information to the price reporters.* (Rule 6.51)

(a) A fine shall be imposed upon a Market-Maker or Floor Broker *who fails to submit trade information in accordance with Rule 6.51.* [executes at least five (5) transactions on each of at least ten (10) different trading days during any month and who submits inaccurate or no transaction times to the Exchange for a significant percentage of transactions executed during month.] Such fines shall be imposed on the basis of the following schedule:

[Percentage of] Number of Offenses[5]

[Inaccurate Times] in any Rolling Twelve-Month Period	*Fine amount*
[20% or more, but less than 30%] *1st Offense*	$[100] *500*
[30% or more, but less than 40%] *2nd Offense*	[250] *1,000*
[40% or more] *Subsequent Offenses*	[500] *2,500*

[5] For purposes of CBOE Rule 17.50(g)(4), an ''offense'' would be defined as an instance in which a pattern or practice of late reporting or failure to report without exceptional circumstances has been determined. *See* Amendment No. 2, *supra*.

[(b) If, in any eighteen (18) calendar month period, a Market-Maker or Floor Broker incurs two (2) fines under subsection (a) hereof, any subsequent fine imposed hereunder for any month during such eighteen (18) month period shall be equal to the sum of (i) the appropriate fine amount under subsection (a) and (ii) an amount equal to the total fine most recently incurred under this subsection (b) during such eighteen (18) month period.]

[(5) Failure to Submit Trade Information to the Price Reporter. (Rule 6.51)]

[(a) A Market-Maker or Floor Broker who executes at least twenty-five (25) sale transactions during any month and who fails to submit required information to the price reporter for a significant percentage of transactions executed during such month shall be subject to the following fines:]

Percentage of sale transaction for applicable month that were not submitted to price reporting Per Market Data Retrieval Reports	Fine
30% or more, but less than 40%	$300
40% or more, but less than 50%	500
50% or more	1,000

(b) If, in any eighteen (18) calendar month period, a Market-Maker or Floor Broker incurs two (2) fines under subsection (a) hereof, any subsequent fine imposed hereunder for any month during such eighteen (18) month period shall be equal to the sum of (i) the appropriate fine amount under subsection (a) and (ii) an amount equal to the total fine incurred under this subsection (b) during such eighteen (18) month period.]

[(6)]*(5)* Violations of Trading Conduct and Decorum Policies (Rule 6.20) Unchanged.

[(7)]*(6)* Failure to Submit Trade Data on Trade Date (''As of Adds'') (Rule 6.51) Unchanged.

[(8)]*(7)* Violations of Exercise and Exercise Advice Rules for Noncash-Settled Equity Options (Rule 11.1, Interpretation and Policy .06) Unchanged.

[(9)]*(8)* Violations of Exercise and Exercise Advice Rules for American-Style, Cash-Settled Index Options (Rule 11.1, Interpretation and Policy .03) Unchanged.

* * * Interpretations and Policies:

.01 Unchanged.

[.02 A time submitted for a transaction pursuant to subsection (g)(4) of this Rule shall generally be considered accurate if such time is within five minutes of either (a) the time submitted by the other party to the transaction or (b) the time the transaction was disseminated by the Exchange's price reporter, provided that trading in the relevant contract was eligible to take place during such times.]

[.03].*02* (a) The Exchange shall attempt to serve members fined pursuant to subsection (g)(4) [or (g)(5)] of this Rule with a written statement in accordance with section (b) of this Rule [on or before the tenth (10th) day of] *within* the month immediately following the month in which the violations were alleged to have occurred. Such members may, [on or before the twenty-fifth (25th) day of the month in which] *within fifteen (15) days after* such service was effected, request verification of the fine by the Exchange.

(b) Notwithstanding the provisions of Interpretation and Policy .03 (a) above, there shall be a cap on the number of transactions during a particular month with respect to which a member fined pursuant to subsection (g)(4) [or (g)(5)] of this Rule may request verification. Such cap shall be imposed pursuant to the following schedule:

Number of [violations] *offenses*	Maximum number of transactions during a particular month with respect to which verification may be requested within [an eighteen] *a rolling twelve month period*
1–2	No Limit.
3+	The greater of (i) 50 transactions or (ii) 10% of the number of transactions deemed not to be in compliance with Rule 17.50(g)(4) [or Rule 17.50(g)(5), as applicable.

The foregoing cap shall apply separately to fines imposed pursuant to subsection (g)(4) of this Rule and to fines imposed pursuant to subsection (g)(5) of this Rule.]

(c) The Exchange shall attempt to serve members fined pursuant to subsection (g)[(7)] *(6)* of this Rule with a written statement in accordance with section (b) of this Rule on or before the tenth (10th) day of the month immediately following the month in which the violations were alleged to have occurred. Such members may, on or before the twenty-fifth (25th) day of the month in which such service was effected, request verification of the fine by the Exchange.

(d) Unchanged.

[.04].*03* Any fine imposed pursuant to subsection (g)[(6)]*(5)* that (i) does not exceed $1,000 and (ii) is not contested, shall not be reported by the Exchange to the SEC, except as may otherwise be required by Exchange Act Rule 19d–1 and by any other regulatory authority.

[.05].*04* The BCC may consolidate into one hearing (i) the review of any fine imposed pursuant to Rule 17.50(g)[(6)]*(5)* that exceeds $2500 (which would be subject to a hearing under Rule 17.50(c)) and (ii) the review of any fine imposed pursuant to Rule 17.50(g)[(6)]*(5)* that does not exceed $2500 (which would otherwise be subject to a hearing under Rule 17.50(d)), if the alleged violations that are the subject of the fines involve the same or a related transaction or occurrence. In case of a consolidation, the procedures governing the disposition of the matter shall be those set forth in Rule 17.50(c). If the review of a fine is to be based upon written submissions then that review may not be consolidated. The BCC may consolidate the review of such matters on its own motion or upon request from the Exchange or the subject of one of the fines. In the event that the BCC determines to consolidate the review of such matters or receives a request to consolidate such matters, the BCC will give all parties to the matters that are subject to possible consolidation a reasonable opportunity to support the consolidation or object to the consolidation in writing. In determining whether to consolidate the review of such matters, the BCC shall take into account such factors as it deems relevant including, but not limited to, the staff resources and time that may be saved by the consolidation and whether the consolidation could potentially be prejudicial to the parties involved.

II. Self-Regulatory Organization's Statement of the Purpose of, and Statutory Basis for, the Proposed Rule Change

In its filing with the Commission, the CBOE included statements concerning the purpose of, and basis for, the proposed rule change, as amended, and discussed any comments it received on the proposed rule change. The text of these statements may be examined at the places specified in Item IV below. The CBOE has prepared summaries, set forth in Sections A, B, and C below, of the most significant aspects of such statements.

A. Self-Regulatory Organization's Statement of the Purpose of, and Statutory Basis for, the Proposed Rule Change

1. Purpose

The Exchange proposes to amend CBOE Rule 6.51 to require the reporting of options transactions within 90 seconds. The Exchange also proposes to amend CBOE Rule 17.50 to (i) consolidate and modify the fine schedules for both inaccurate times and unreported sales, (ii) eliminate Interpretation and Policy .02 of CBOE Rule 17.50 in accordance with the amendments to CBOE Rule 6.51, (iii) revise the time period within which members served with a written statement in accordance with CBOE Rule 17.50(b) may request verification of the fine imposed, and (iv) eliminate the requirement that the Exchange contemporaneously send a copy of the written statement to the designated clearing member. The Exchange also proposes to issue a Regulatory Circular to modify Exchange policy regarding the application of CBOE Rule 17.50(g)(4).

The proposed rule change, as amended, would revise CBOE Rule 6.51 to require options transactions to be reported within 90 seconds of execution. Currently, CBOE Rule 6.51(a) requires the participant designated by the Exchange in each transaction to *immediately* report the transaction to the Exchange. Under the proposal, as amended, the designated member would be required to report or ensure that the transaction is reported to the Exchange within 90 seconds of execution. About 85% of options orders currently are electronically routed and executed and therefore, are immediately reported and ''printed on the tape.'' The Exchange believes that the adoption of a specific standard for options trade reporting is appropriate, particularly for those options orders routed and executed manually. The Exchange notes that the proposed rule change, as amended, is substantially similar to a proposed rule change by the American Stock Exchange (''Amex'') that was recently approved by the Commission.[6]

The proposed rule change, as amended, would also revise Interpretation and Policy .01 of CBOE Rule 6.51 to provide that transactions not reported within 90 seconds after execution in accordance with CBOE Rule 6.51(a) and Interpretation and Policy .01 would be designated as late. A pattern or practice of late reporting without exceptional circumstances may be considered conduct inconsistent with just and equitable principles of trade and subject to summary fine under CBOE Rule 17.50 or to discipline by the CBOE's Business Conduct Committee.

Additionally, the proposal would revise CBOE Rule 17.50 to consolidate and modify the fine schedules for both failure to submit accurate trade information under CBOE Rule 17.50(g)(4) and failure to submit trade information to the price reporter under CBOE Rule 17.50(g)(5). The Exchange proposes to revise Paragraph (g)(4) of CBOE Rule 17.50 to provide that a fine will be imposed on a Market-Maker or Floor Broker who fails to submit trade information in accordance with CBOE Rule 6.51. The fine schedule under CBOE Rule 17.50(g)(4) would be replaced with a new fine schedule that would impose fines according to the number of offenses committed during any rolling twelve month period. Specifically, a first offense would incur a fine amount of $500, a second offense would incur a $1,000 fine, and subsequent offenses would incur a $2,500 fine.

The Exchange also proposes to eliminate Interpretation and Policy .02 of CBOE Rule 17.50, because under the proposal rule change, as amended, the surveillance for late trade reports would be conducted pursuant to the provisions of amended Interpretation and Policy .01 of CBOE Rule 6.51.

Moreover, the proposal would revise the time-period within which a member served with a written statement pursuant to CBOE Rule 17.50(b) can request verification of the fine.

[6] *See* Securities Exchange Act Release No. 43233 (Aug. 30, 2000) (approving File No. SR–Amex–00–03).

Currently, CBOE Rule 17.50 Interpretation and Policy .03(a) requires the Exchange to attempt to serve members fined pursuant to CBOE Rule 17.50 with a written statement on or before the tenth day of the month immediately following the month in which the violations were alleged to have occurred. Fined members may request verification of the fine on or before the twenty-fifth day of the month in which service was affected. The proposal would amend the time period within which a fined member, served with a written statement pursuant to Interpretation and Policy .03(a) of CBOE Rule 17.50(b), could request verification of the fine to fifteen days after the date of service of the written statement. The Exchange believes that this change is necessary to allow staff additional time to process account exceptions.

The Exchange also proposes to amend CBOE Rule 17.50(b) by deleting the statement that the Exchange shall contemporaneously send a copy of the written statement served on members fined pursuant to CBOE Rule 17.50 to the clearing member previously designated by the member pursuant to Exchange Rule 3.23. The Exchange believes this procedure can be eliminated because clearing members are advised of the fine imposed on a member through the Exchange's automated billing system.[7]

Finally, the Exchange proposes to issue a Regulatory Circular to its membership that, among other things modifies Exchange policy regarding the application of CBOE Rule 17.50(g)(4). Specifically, the Exchange proposes to modify Exchange policy pertaining to the verification process under CBOE Rule 17.50, Interpretation and Policy .03. Section (d) of Interpretation and Policy .03 states that verification requests will be made in the manner and form required by the Exchange. The proposed Regulatory Circular would inform the membership that, in accordance with Interpretation and Policy .03(d), CBOE market makers who do not utilize a market maker hand-held terminal may not request verification of any fine imposed under CBOE Rule 17.50(g)(4). The Exchange believes that this policy will encourage market makers to use hand-held terminals, which, in turn, will help prevent instances of late reporting because of illegible handwriting.

The proposed Regulatory Circular would also modify Exchange policy regarding the defenses a member fined pursuant to CBOE Rule 17.50(g)(4) could raise. Specifically, the Exchange would notify members that they could not defend against a fine imposed pursuant to CBOE Rule 17.50(g)(4) the claim that a transaction time was inaccurately keypunched by a keypunch operator because an order ticket was illegible. Finally, the proposed Regulatory Circular would inform the membership of the proposed amendments to CBOE Rule 6.51 and CBOE Rule 17.50 and set forth guidelines to reflect Exchange policy with respect to the application of CBOE Rule 17.50(g)(4).

The Exchange proposes to implement the proposed rule change, as amended, six months after its approval by the Commission. The purpose of this time interval is to give the Exchange the opportunity to inform members of the partial approval of the proposed rule change, as amended, in the Exchange's Regulatory Bulletin, through the proposed Regulatory Circular, before the rule change is implemented. Additionally, the Exchange believes that the six-month interval will allow the Exchange to further inform the membership of the imminent changes, and to encourage compliance with the rule, by running the current exception process side by side with the proposed new exception process. During this six month time period, the Exchange's Department of Market Regulation will issue a written notice to a member in every instance during a subject review period when a time submitted by that member would have been determined to be inaccurate based on the new 90 second reporting criteria and subject to a summary fine notification under Rule 17.50(g)(4) for violation of Rule 6.51. The Exchange will publish the effective date of the rule change in the proposed Regulatory Circular.

2. Statutory Basis

The Exchange believes that the proposed rule change is consistent with Section 6(b) of the Act,[8] in general, and furthers the objectives of Section 6(b)(5),[9] in particular, in that it is designed to prevent fraudulent and manipulative acts and practices, to promote just and equitable principles of change, to foster cooperation and coordination with persons engaged in facilitating transactions in securities, and to remove impediments to and perfect the mechanism of a free and open market and a national market system.

B. Self-Regulatory Organization's Statement on Burden on Competition

The Exchange does not believe that the proposed rule change will impose any burden on competition not necessary or appropriate in furtherance of the purposes of the Act.

C. Self-Regulatory Organization's Statement on Comments on the Proposed Rule Change Received From Members, Participants, or Others

The Exchange neither solicited nor received written comments with respect to the proposed rule change.

III. Date of Effectiveness of the Proposed Rule Change and Timing for Commission Action

With respect to the portion of the proposed rule change amending CBOE Rule 17.50, within 35 days of the date of publication of this notice in the **Federal Register** or within such longer period (i) as the Commission may designate up to 90 days of such date if it finds such longer period to be appropriate and publishes its reasons for so finding, or (ii) as to which the CBOE consents, the Commission will:

A. by order approve the proposed rule change, or

B. institute proceedings to determine whether the proposed rule change should be disapproved.

IV. Solicitation of Comments

Interested persons are invited to submit written data, views and arguments concerning the foregoing, including whether the proposed rule change, as amended, is consistent with the Act. Persons making written submissions should file six copies thereof with the Secretary, Securities and Exchange Commission, 450 Fifth Street, NW., Washington, DC 20549–0609. Copies of the submission, all subsequent amendments, all written statements with respect to the proposed rule change that are filed with the Commission, and all written communications relating to the proposed rule change between the Commission and any persons, other than those that may be withheld from the public in accordance with the provisions of 5 U.S.C. 552, will be available for inspection and copying at the Commission's Public Reference Room. Copies of such filing will also be available for inspection and copying at the principal office of the CBOE. All submissions should refer to File No. SR–CBOE–00–37 and should be submitted by October 16, 2000.

[7] *See* CBOE Rule 17.50(e).

[8] 15 U.S.C. 78f(b).

[9] 15 U.S.C. 78f(b)(5).

V. Commission's Findings and Order Granting Partial Accelerated Approval of Proposed Rule Change

The Commission finds that the portion of the proposed rule change, as amended, relating to the reporting of options transactions within 90 seconds after execution is consistent with the requirements of the Act and the rules and regulations thereunder applicable to a national securities exchange.[10] Specifically, the Commission believes that the portion of the proposal, as amended, relating to the reporting of options transactions within 90 seconds after execution is consistent with the Section 6(b)(5)[11] requirements that the rules of an exchange be designed to promote just and equitable principles of trade, to remove impediments to and perfect the mechanisms of a free and open market and a national market system, and, in general, to protect investors and the public.

The Commission believes that the portion of the amended proposal, which requires the reporting of all options transactions within 90 seconds of execution, should help to prevent fraudulent and manipulative acts and practices, as well as to promote just and equitable principles of trade. The Commission believes that the portion of the proposed rule change, as amended, relating to CBOE Rule 6.51 should enable the Exchange to provide accurate trade information to investors more efficiently. The enhanced transparency associated with timely trade reporting should facilitate price discovery for investors and assist the CBOE's surveillance of its members' trading in listed options.

The CBOE has requested that the Commission find good cause for approving the portion of the proposed rule change, as amended, relating to CBOE Rule 6.51 prior to the thirtieth day after the date of publication of notice in the **Federal Register.** The Commission believes that the portion of the proposal relating to the reporting of options transactions within 90 seconds after execution is substantially similar to the Amex proposal to amend Amex rules to require the reporting of options transactions within 90 seconds of execution that was recently approved by the Commission.[12] The Amex proposal was noticed for the full 21-day comment period and no comments were received. Accordingly, the Commission finds good cause pursuant to Section 19(b)(2) of the Act[13] to accelerate approval of the proposed rule change, as amended.

It is therefore ordered, pursuant to Section 19(b)(2) of the Act,[14] that the portion of the proposed rule change amending CBOE Rule 6.51, to require the reporting of the options transactions within 90 seconds (File No. SR–CBOE–00–37), is approved on an accelerated basis.

For the Commission, by the Division of Market Regulation, pursuant to delegated authority.[15]

Margaret H. McFarland,

Deputy Secretary.

[FR Doc. 00–24506 Filed 9–22–00; 8:45 am]

BILLING CODE 8010–01–M

[10] In approving this part of the proposal, the Commission has considered the proposed rule's impact on efficiency, competition, and capital formation. 15 U.S.C. 78c(f).

[11] 15 U.S.C. 78f(b)(5).

[12] *See* Securities Exchange Act Release No. 43233 (Aug. 30, 2000) (approving File No. SR–Amex–00–03).

[13] 15 U.S.C. 78s(b)(2).

[14] *Id.*

[15] 17 CFR 200.30–3(a)(12).

SMALL BUSINESS ADMINISTRATION

Reporting and Recordkeeping Requirements Under OMB Review

AGENCY: Small Business Administration.

ACTION: Notice of reporting requirements submitted for OMB review.

SUMMARY: Under the provisions of the Paperwork Reduction Act (44 U.S.C. Chapter 35), agencies are required to submit proposed reporting and recordkeeping requirements to OMB for review and approval, and to publish a notice in the **Federal Register** notifying the public that the agency has made such a submission.

DATES: Submit comments on or before October 25, 2000. If you intend to comment but cannot prepare comments promptly, please advise the OMB Reviewer and the Agency Clearance Officer before the deadline.

Copies: Request for clearance (OMB 83–1), supporting statement, and other documents submitted to OMB for review may be obtained from the Agency Clearance Officer.

ADDRESSES: Address all comments concerning this notice to: Agency Clearance Officer, Jacqueline White, Small Business Administration, 409 3rd Street, SW., 5th Floor, Washington, DC 20416; and OMB Reviewer, Office of Information and Regulatory Affairs, Office of Management and Budget, New Executive Office Building, Washington, DC 20503.

FOR FURTHER INFORMATION CONTACT: Jacqueline White, Agency Clearance Officer, (202) 205–7044.

SUPPLEMENTARY INFORMATION:

Title: Prime ''Program for Investment in Microenterpreneurs''.

No: N/A.

Frequency: On Occasion.

Description of Respondents: Disadvantage Entrepreneurs.

Annual Responses: 500.

Annual Burden: 40,000.

Jacqueline White,

Chief, Administrative Information Branch.

[FR Doc. 00–24542 Filed 9–22–00; 8:45 am]

BILLING CODE 8025–01–P

SMALL BUSINESS ADMINISTRATION

[Declaration of Disaster #3295]

State of California

As a result of the President's major disaster declaration on September 14, 2000, I find that Napa County, California constitutes a disaster area due to damages caused by an earthquake that occurred on September 3, 2000. Applications for loans for physical damage as a result of this disaster may be filed until the close of business on November 13, 2000, and for loans for economic injury until the close of business on June 14, 2001 at the address listed below or other locally announced locations: U.S. Small Business Administration, Disaster Area 4 Office, P. O. Box 13795, Sacramento, CA 95853–4795.

In addition, applications for economic injury loans from small businesses located in the contiguous counties of Lake, Solano, Sonoma, and Yolo may be filed until the specified date at the above location.

The interest rates are:

	Percent
For Physical Damage:	
Homeowners with credit available elsewhere	7.375
Homeowners without credit available elsewhere	3.687
Businesses with credit available elsewhere	8.000
Businesses and non-profit organizations without credit available elsewhere	4.000
Others (including non-profit organizations) with credit available elsewhere	6.750
For Economic Injury:	
Businesses and small agricultural cooperatives without credit available elsewhere	4.000

The numbers assigned to this disaster are 329502 for physical damage and 9I8400 for economic injury.

(Catalog of Federal Domestic Assistance Program Nos. 59002 and 59008)

Dated: September 18, 2000.

Herbert L. Mitchell,

Acting Associate Administrator for Disaster Assistance.

[FR Doc. 00–24473 Filed 9–22–00; 8:45 am]

BILLING CODE 8025–01–P

SMALL BUSINESS ADMINISTRATION

[Declaration of Disaster #3294]

State of Florida

Duval County and the contiguous counties of Baker, Clay, Nassau, and St. Johns in the State of Florida constitute a disaster area due to damages caused by heavy rains and flooding that occurred on September 6 and 7, 2000. Applications for loans for physical damage as a result of this disaster may be filed until the close of business on November 13, 2000 and for economic injury until the close of business on June 13, 2001 at the address listed below or other locally announced locations: U.S. Small Business Administration, Disaster Area 2 Office, One Baltimore Place, Suite 300, Atlanta, GA 30308.

The interest rates are:

	Percent
For Physical Damage:	
Homeowners with credit available elsewhere	7.375
Homeowners without credit available elsewhere	3.687
Businesses with credit available elsewhere	8.000
Businesses and non-profit organizations without credit available elsewhere	4.000
Others (including non-profit organizations) with credit available elsewhere	6.750
For Economic Injury:	
Businesses and small agricultural cooperatives without credit available elsewhere	4.000

The numbers assigned to this disaster are 329406 for physical damage and 9I7800 for economic injury.

(Catalog of Federal Domestic Assistance Program Nos. 59002 and 59008)

Dated: September 13, 2000.

Fred Hochberg,

Deputy Administrator.

[FR Doc. 00–24476 Filed 9–22–00; 8:45 am]

BILLING CODE 8025–01–P

SMALL BUSINESS ADMINISTRATION

[Declaration of Economic Injury Disaster #9I79]

State of Colorado; (And Contiguous Counties in Arizona, New Mexico, and Utah)

Montezuma County and the contiguous counties of Dolores, La Plata, and San Juan in the State of Colorado; Apache County, Arizona; San Juan County, New Mexico; and San Juan County, Utah constitute an economic injury disaster loan area due to wildfires that occurred from July 20 through August 14, 2000. Eligible small businesses and small agricultural cooperatives without credit available elsewhere may file applications for economic injury assistance as a result of this disaster until the close of business on June 14, 2001 at the address listed below or other locally announced locations: U.S. Small Business Administration, Disaster Area 3 Office, 4400 Amon Carter Blvd., Suite 102, Fort Worth, TX 76155.

The interest rate for eligible small businesses and small agricultural cooperatives is 4 percent. The numbers assigned to this disaster are 9I7900 for Colorado, 9I8000 for Arizona, 9I8100 for New Mexico, and 9I8200 for Utah.

(Catalog of Federal Domestic Assistance Program No. 59002)

Dated: September 14, 2000.

Aida Alvarez,

Administrator.

[FR Doc. 00–24474 Filed 9–22–00; 8:45 am]

BILLING CODE 8025–01–P

SMALL BUSINESS ADMINISTRATION

National Advisory Council; Public Meeting

The U.S. Small Business Administration National Advisory Council, will hold a public meeting October 1–3, 2000 located at the Wyndham Miami Biscayne Bay Hotel, 1601 Biscayne Boulevard Miami, Florida to discuss such matters as may be presented by members, staff of the U.S. Small Business Administration, or others present. For further information call Bettie Baca, Counselor to the Administrator/Public Liaison, (202) 205–2469.

Bettie Baca,

Counselor to the Administrator/Public Liaison.

[FR Doc. 00–24475 Filed 9–22–00; 8:45 am]

BILLING CODE 8025–01–P

DEPARTMENT OF STATE

[Public Notice 3424]

Office of the Coordinator for Counterterrorism; Designation of a Foreign Terrorist Organization

AGENCY: Department of State.

ACTION: Designation of a Foreign Terrorist Organization.

Pursuant to Section 219 of the Immigration and Nationality Act (''INA''), as added by the Antiterrorism and Effective Death Penalty Act of 1996, Public Law 104–132, section 302, 110 Stat. 1214, 1248 (1996), and amended by the Illegal Immigration Reform and Immigrant Responsibility Act of 1996, Public Law 104–208, 110 Stat. 3009 (1996), the Secretary of State hereby designates, effective September 25, 2000, the following organization as a foreign terrorist organization:

The Islamic Movement of Uzbekistan

Dated: September 21, 2000.

Ambassador Michael A. Sheehan,

Coordinator for Counterterrorism, Department of State.

[FR Doc. 00–24744 Filed 9–22–00; 9:10 am]

BILLING CODE 4710–25–P

TENNESSEE VALLEY AUTHORITY

Paperwork Reduction Act of 1995, as amended by P.L. 104–13, Submission for OMB Review; Comment Request

AGENCY: Tennessee Valley Authority.

ACTION: Submission for OMB review; comment request.

SUMMARY: The proposed information collection described below will be submitted to the Office of Management and Budget (OMB) for review, as required by the Paperwork Reduction Act of 1995 (44 U.S.C. Chapter 35, as amended). The Tennessee Valley Authority is soliciting public comments on this proposed collection as provided by 5 CFR Section 1320.8(d)(1). Requests for information, including copies of the information collection proposed and supporting documentation, should be directed to the Agency Clearance Officer: Wilma H. McCauley, Tennessee Valley Authority, 1101 Market Street (EB 5B), Chattanooga, TN 37402–2801; (423) 751–2523.

Comments should be sent to OMB Office of Information and Regulatory Affairs, Attention: Desk Officer for Tennessee Valley Authority no later than October 25, 2000.

SUPPLEMENTARY INFORMATION:

Type of Request: Regular submission, proposal to reinstate, with minor revisions, a previously approved collection for which approval has expired (OMB control number 3316–0009).

Title of Information Collection: Salary Surveys for Salary Policy Bargaining Unit Employees.

Frequency of Use: Annually.

Type of Affected Public: State or local governments, Federal agencies, non-profit institutions, businesses, or other for-profit.

Small Businesses or Organizations Affected: No.

Federal Budget Functional Category Code: 999.

Estimated Number of Annual Responses: 175.

Estimated Total Annual Burden Hours: 2,450.

Estimated Average Burden Hours Per Response: 4.5.

Need For and Use of Information:

TVA conducts annual salary surveys for employee compensation and benefits as a basis for labor negotiations in determining prevailing rates of pay and benefits for represented salary policy employees. TVA surveys firms, and Federal, State, and local governments employees perform work similar to that of TVA's salary policy employees.

Jacklyn J. Stephenson,

Senior Manager, Enterprise Operations, Information Services.

[FR Doc. 00–24509 Filed 9–22–00; 8:45 am]

BILLING CODE 8120–08–P

TENNESSEE VALLEY AUTHORITY

Sunshine Act Meeting

AGENCY HOLDING THE MEETING: Tennessee Valley Authority (Meeting No. 1523).

TIME AND DATE: 9 a.m. (EDT), September 27, 2000.

PLACE: TVA Knoxville West Tower Auditorium, 400 West Summit Hill Drive, Knoxville, Tennessee.

STATUS: Open.

Agenda

Approval of minutes of meeting held on August 29, 2000.

New Business

A—Budget and Financing

A1. Approval of power system operating and capital budgets for Fiscal Year 2001.

A2. Approval of short-term borrowing from the Treasury.

B—Purchase Awards

B1. Contract with Bicentennial Volunteers Incorporated to continue to provide personnel assistance for TVA/BVI emergency support of the Federal Emergency Management Agency and other Federal agencies.

B2. Contract with PS Energy Group for a TVA system-wide comprehensive fuel management, lubricant products, and services program under Section 8(a) of the Small Business Act.

B3. Contract with Waste Management for a TVA system-wide solid waste disposal services management program.

C1. Contracts with General Electric Company and TurboCare for replacement steam turbine blades and associated services.

C2. Supplement to contract with Siemans Power T&D, Inc., for power circuit breakers.

C3. Supplement to contract with Southern States, Inc., for disconnect switches and related equipment.

C4. Supplement to contract with Framatome Cogema Fuels for nuclear fuel fabrication for Sequoyah Nuclear Plant.

C5. Increase in prices under Dispersed Power Price Schedule.

E—Real Property Transactions

E1. Sale of nomcommercial, nonexclusive permanent easements to Danny Grimshaw and Robert D. Mestach affecting 0.10 acre of land on Tellico Reservoir in Loudon and Monroe Counties, Tennessee, for the construction, operation, and maintenance of private water-use facilities (Tract Nos. XTELR–216RE and –217RE).

E2. Deed modification to remove a recreation restriction and change to residential development affecting approximately 6.1 acres of former TVA land on Fort Loudoun Reservoir in Blount County, Tennessee, to allow the State of Tennessee to exchange the 6.1 acres of residential development for 158 acres of land more suitable for public recreation (Tract No. XTFL–13).

F—Unclassified

1. Approval to file condemnation cases to acquire permanent easements and rights-of-way for an access road and transmission lines at the Bessemer-Tuscaloosa Tap to Airport Lane, Jefferson County, Alabama; Melton Hill-Loudon County, Tennessee; and the Weaver-Young Cane transmission line in Union County, Georgia.

For more information: Please call TVA Public Relations at (423) 632–6000, Knoxville, Tennessee. Information is also available at TVA's Washington Office (202) 898–2999. People who plan to attend the meeting and have special needs should call (865) 632–6000.

Dated: September 20, 2000.

William L. Osteen,

Associate General Counsel and Assistant Secretary.

[FR Doc. 00–24620 Filed 9–21–00; 10:22 am]

BILLING CODE 8120–08–M

DEPARTMENT OF TRANSPORTATION

Federal Aviation Administration

Notice of Intent to Rule on Application 00–03–C–00–AVP to Impose and Use the Revenue From a Passenger Facility Charge (PEC) at, Wilkes-Barre/Scranton, Pennsylvania

AGENCY: Federal Aviation Administration (FAA), DOT.

ACTION: Notice of intent to rule on application.

SUMMARY: The FAA proposes to rule and invites public comment on the application to impose and use the revenue from a PFC at Wilkes-Barre/Scranton International Airport under the provisions of the Aviation Safety and Capacity Expansion Act of 1990 (Title IX of the Omnibus Budget Reconciliation Act of 1990) (Public Law 101–508) and Part 158 of the Federal Aviation Regulations (14 CFR Part 158).

DATES: Comments must be received on or before October 25, 2000.

ADDRESSES: Comments on this application may be mailed or delivered in triplicate to the FAA at the following address: Mr. Oscar Sanchez, Project Manager, Harrisburg Airports District Office, 3911 Hartzdale Dr., suite 1100, Camp Hill, PA 17011.

In addition, one copy of any comments submitted to the FAA must be mailed or delivered to Mr. Barry Centini, Airport Director of the Luzerne and Lackawanna Counties By-County Board of Commissioners at the following address: Wilkes-Barre/Scranton International Airport, Avoca, Pennsylvania 18641.

Air carriers and foreign air carriers may submit copies of written comments previously provided to the Luzerne and Lackawanna Counties By-County Board of Commissioners under section 158.23 of Part 158.

FOR FURTHER INFORMATION CONTACT: Mr. Oscar Sanchez, Program Manager, Harrisburg Airports District Office, 3911 Hartzdale Dr., suite 1100 Camp Hill, PA 17011, (717) 730–2834. The application may be reviewed in person at this same location.

SUPPLEMENTARY INFORMATION: The FAA proposes to rule and invites public comment on the application to impose and use the revenue from a PFC at Wilkes-Barre/Scranton International Airport under the provisions of the Aviation Safety and Capacity Expansion Act of 1990 (Title IX of the Omnibus Budget Reconciliation Act of 1990) (Public Law 101–508) and Part 158 of the Federal Aviation Regulations (14 CFR Part 158).

On August 28, 2000, the FAA determined that the application to impose and use the revenue from a PFC submitted by the Luzerne and Lackawanna Counties By-County Board of Commissioners was substantially complete within the requirements of section 158.25 of Part 158. The FAA will approve or disapprove the application, in while or in part, no later than Nov. 23, 2000. The following is a brief overview of the application.

PFC Application No.: 00–03–C–00–AVP.

Level of the proposed PFC: $4.50.

Proposed charge effective date: January 1, 2001.

Proposed charge expiration date: July 31, 2010.

Total estimated PFC revenue: $10,794,855.

Brief description of proposed project(s):

- Construct New Passenger Terminal Facility
- Construction Access Roadways and Non-Revenue Surface Parking
- Construction Terminal Aircraft Parking Apron
- Architect/Engineering Inspection and Contingency Fees
- Construct Snow Removal Equipment Storage/Maintenance Building
- Airport Master Plan Update
- Design/Construct Perimeter Fence
- Design Runway Safety Areas
- Design/Reconstruct General Aviation ramp
- Purchase Snow Removal Equipment (Three plows/spreaders)

Class or classes of air carriers which the public agency has requested not be required to collect PFCs: Non-Scheduled/On-Demand Air Carriers, with seating capacity of less than 20 seats, filing DOT Form 1800–31.

Any person may inspect the application in person at the FAA office listed above under **FOR FURTHER INFORMATION CONTACT** and at the FAA regional airports office located at: 1 Aviation Plaza, Jamaica, New York 11434–4809.

In addition, any person may, upon request, inspect the application, notice and other documents germane to the application in person at the Luzerne and Lackawanna Counties By-County Board of Commissioners.

Issued in New York City, New York on August 28, 2000.

Thomas Felix,

Manager, Planning and Programming Branch, Eastern Region

[FR Doc. 00–24492 Filed 9–22–00; 8:45 am]

BILLING CODE 4910–13–M

DEPARTMENT OF TRANSPORTATION

National Highway Traffic Safety Administration

Denial of Motor Vehicle Defect Petition, DP00–001

AGENCY: National Highway Traffic Safety Administration (NHTSA), Department of Transportation.

ACTION: Denial of petition for a defect investigation.

SUMMARY: This notice sets forth the reasons for the denial of a petition submitted to NHTSA under 49 U.S.C. § 30162, requesting that the agency commence a proceeding to determine the existence of a defect related to motor vehicle safety. The petition is hereinafter identified as DP00–001.

FOR FURTHER INFORMATION CONTACT: Dr. George Chiang, Office of Defects Investigation, NHTSA, 400 Seventh Street, SW, Washington, D.C. 20590. Telephone: (202) 366–5206.

SUPPLEMENTARY INFORMATION: Mr. Dave Blum (petitioner), 5329 Eagles Nest Road, Fruitland Park, Florida 34731, submitted a petition to NHTSA by letter dated February 1, 2000, requesting that an investigation be initiated on trailer towing hitch platforms (receivers) and related hitch equipment for ''compatibility with National Highway Safety Standards for materials and construction specifications.''

Mr. Blum is a safety committee member of the Region 3 Wally Byam Caravan Club International Airstream travel club. He provided pictures and descriptions of four club members' tow vehicles with cracked Original Equipment Manufacturer hitch receivers. The tow vehicles were model years (MY) 1993, 1994, and 1997 General Motor Corporation Suburban Sport Utility Vehicles and a MY 1995 Dodge 2500 pickup truck.

NHTSA has reviewed and analyzed all available information. The result of this review and analysis is set forth in a Petition Analysis Report for DP00–001 and is published in its entirety as an appendix to this notice.

For the reasons presented in the petition analysis report, it is unlikely that NHTSA would issue an order concerning the notification and remedy of a safety-related defect at the conclusion of an investigation. Therefore, in view of the need to allocate and prioritize NHTSA's limited resources to best accomplish the agency's safety mission, the petition is denied.

Authority: 49 U.S.C. 30162(d); delegations of authority at CFR 1.50 and 501.8.

Kenneth N. Weinstein,

Associate Administrator for Safety Assurance.

Appendix—Petition Analysis—DP00–001

1.0 Introduction

Mr. Dave Blum (petitioner), Fruitland Park, Florida, submitted a petition to NHTSA by letter requesting that an investigation be initiated on trailer towing hitch receivers (platforms) and related hitching equipment ''to assess their compatibility with National Highway Safety Standards for materials and construction specifications.'' The petitioner, who is a member of the Wally Byam Caravan Club International (WBCCI) Airstream travel club safety committee stated that NHTSA's Office of Defects Investigation (ODI) should open an investigation concerning hitch receiver failure because the WBCCI Airstream travel club members allegedly inspected and found cracks in their hitch receivers.

2.0 Vehicle Information

2.1 Subject Vehicle

In his petition, Mr. Blum did not specify the make, model, or year of vehicles he wanted ODI to investigate. However, between December 1999 and January 2000, he supplied information concerning cracked hitch receivers on a 1993, 1994, and 1997 model year (MY) General Motor Corporation (GM) Suburban vehicle and on a 1995 MY Dodge 2500 pickup (PU) truck. ODI selected MY 1992—1997 GM Suburban vehicles as the subject vehicles for the following reasons: (1) the petitioner identified three Suburban vehicles with cracked Original Equipment Manufacturer (OEM) hitch receivers; (2) the ODI consumer complaint database contained a relatively high number of complaints on the subject vehicles; (3) the Suburban has one of the largest towing capacities among the peer vehicles and is commonly used to tow large travel trailers; and (4) ODI had conducted a previous investigation (PE95–036) on certain GM Sport Utility Vehicles (SUVs), including MY 1992–1995 Suburbans to investigate a similar OEM hitch receiver crack problem.

2.2 Vehicles Involved

GM produces the Suburban for both the Chevrolet and GMC Divisions. The combined number of subject vehicles produced in the United States was 738K vehicles.[1] The Chevrolet Division accounted for 512K

[1] Ward's Automotive Yearbook, 1992—1998 Editions for MY 1992—1997 Suburbans.

vehicles and the GMC Division accounted for 226K vehicles. According to GM, among the 738K vehicles, 494K vehicles were equipped with factory installed OEM hitch receivers.

3.0 Previous Recalls and Investigations of Hitch Receivers

ODI is aware of one recall and one previous investigation concerning hitch receiver cracking. DaimlerChrysler recalled certain MY 1998–2000 Dodge 2500 Ram pickup trucks (Recall 00V–107) because the steel had insufficient strength due to poor quality control. ODI opened a Preliminary Evaluation, PE95–036, in June of 1995 into an alleged defect in MY 1992–1993 Suburban vehicles after receiving four (4) complaints, one MY 1992 and three (3) MY 1993, concerning cracked hitch receivers. During this investigation, ODI expanded the scope to include other MY 1992–1995 GM SUVs. By the conclusion of the investigation in late 1995, ODI had received another complaint (MY 1992) and GM reported three (3) additional complaints (one MY 1992 and two MY 1993) bringing the complaints to a combined total of eight (8). The investigation revealed no injuries or crashes related to the alleged defect on the subject vehicles. ODI closed the investigation without any further actions and concluded the following:

* * * it appears that the cracks are readily obvious and slow to propagate. The problem may not be a catastrophic failure of the hitch platform. The high number of warranty claims coupled with the corresponding low number of failures is not indicative of a safety trend at this time.[2]

4.0 Hitch Receiver/Equipment and Towing Limits

Currently, there are no Federal Motor Vehicle Safety Standards (FMVSS) applicable to trailer towing hitch equipment. However, many hitch equipment manufacturers use the Society of Automotive Engineers Standard, SAE J684,[3] for hitch classification and test limits. According to SAE J684 (Table 1), there are four classes of towing capacities or tow ratings for applications less than 10,000 lb. When used with a weight distributing hitch system, the Suburban has a 10,000 lb. maximum towing capacity with the driver and one passenger onboard and no cargo in the tow vehicle. The additional weight of other occupants and cargo in the tow vehicle will reduce the towing capacity accordingly.

TABLE 1.—VARIOUS TYPES OF HITCH RECEIVERS

Class rating per SAE J684	Towing duty	Max. towing weight (in pounds)	Hitch system attachment type	Common payloads
Class I	Light	2,000	Weight Carrying (WC)	Monocycle & Jet Ski trailers.
Class II	Medium	3,500	WC	Small Boat & utility trailers.
Class III	Heavy	5,000	WC	Med. travel & utility trailers, Large boat trailers.
Class IV	Heavy	10,000	Weight Distributing	Large travel & utility trailers Automotive trailers.

4.1 Hitch Receiver

Figure 1 shows a diagram of a typical frame mounted Class III/IV type hitch receiver. There are three basic sections that make up a hitch receiver: (1) the hitch bar and ball assembly that connects the trailer to the tow vehicle, (2) the horizontal box transfer beam and (3) the vertical mounting flanges for attachment to the vehicle frame. Note that the diagram also shows the typical crack patterns found as reported by the petitioner.

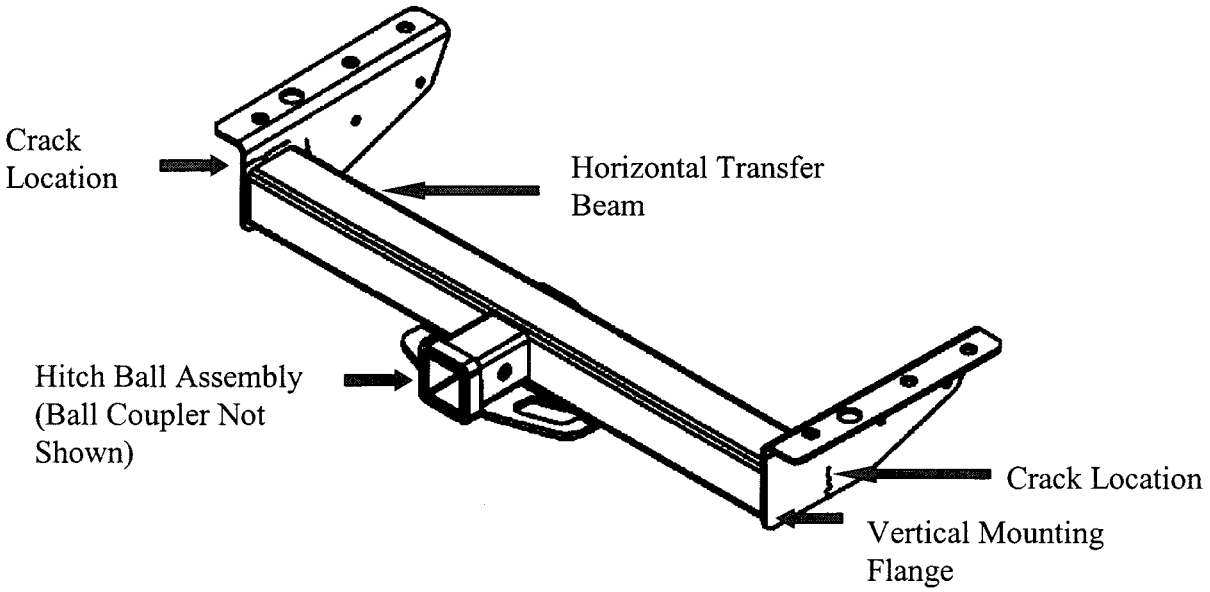

Figure 1. Typical Class III/IV towing Hitch Receiver

[2] NHTSA ODI PE95–036 (J. Abbott) of 31 October, 1995 (closing resume).

[3] "Trailering Couplings, Hitches, and Safety Chains—Automotive Type"—SAE J684 (6/98).

4.2 Weight Distribution (WD) Hitch System

Normally, on the lighter duty Class I/II/III applications, the trailer's tongue weight directly pushes down on the hitch receiver's coupling ball causing the rear of the tow vehicle to drop and the front of the vehicle to rise slightly. With larger and heavier trailers, this can severely affect vehicle handling and stopping distances and further add stresses to the tow vehicle and hitch receiver structures. To reduce these undesirable effects, an 'aftermarket' or 'third party' Weight Distribution (WD) hitch system must be used when towing large trailers. For Class IV applications with the WD system as shown in the set up of Figure 2, the two spring bars are bent upward to apply a counter moment torque to the WD hitch ball mount assembly and redirect or redistribute the point load tongue weight further forward in the tow vehicle. The subject vehicles' hitch receiver has a decal specifying 10,000 lb. towing and 1,000 lb. maximum tongue weight limits when used with the WD hitch system.

4.3 Proper Installation of the WD Hitch System

Based on the information obtained from various trailering sources,[4] a properly installed WD hitch system evenly distributes the loads to the entire tow vehicle. The WD hitch system's spring bars force both the front and rear wheel fenders equally downward. This aligns the tow vehicle so that it is approximately the same 'attitude' or 'level' as it was before the trailer was hooked up. A poorly installed WD hitch system can cause the tow vehicle's front end to 'lift up' resulting in more weight to the hitch receiver and rear axle. In addition, the ball mount height, spring bar angles, spring bar engagement level, and ball mount receiver bar length can also affect the proper installation and effectiveness of the WD hitch system.

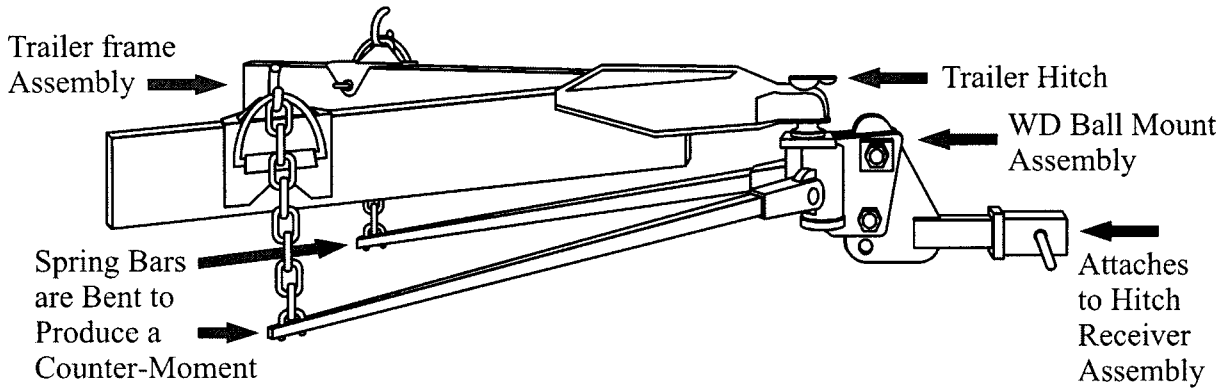

Figure 2. Typical Weight Distributing Hitch System Setup

4.4 Hitch Receiver Performance

For Class IV hitch receivers, SAE recommends a series of static test loads applied to the hitch ball mount and receiver to verify their towing limits. The static test loads include longitudinal, transverse, vertical and moment loads. According to SAE,[5] these static test loads are higher than the loads encountered during actual on-road towing. For example, the 2,100 lb. SAE specified vertical load is more than twice that of the typical trailer tongue weight limit of 1,000 lb. Tests conducted by SAE in the mid-1990s verified that the actual measured dynamic loads under normal towing conditions, such as turns, hills, dips and stops, are well within the higher SAE specified static loads. However, SAE also cautioned that abuse or mishaps such as backing into an object or one side of the trailer falling off the pavement can create loads that exceed the SAE specified loads. Remote and unimproved roadways and certain stretches of highways, with short concrete slabs causing the trailer to ''porpoise'' or oscillate up and down severely, can also create higher than normal loads at the hitch receiver.

5.0 Complaints

5.1 Complaints Submitted to ODI on the Subject Vehicles

ODI searched and analyzed all complaints involving the subject vehicles in its consumer database pertaining to an alleged cracked hitch receiver. As of August 1, 2000, the ODI database had recorded 15 cracked hitch receiver complaints on the subject vehicles. As shown in Table 2, the complaint dates, by calender year, were as follow: five in 1995, one in 1996, two in 1998, one in 1999 and six in 2000. There are high concentrations of complaints submitted in years 1995 and 2000. The first complaint concentration in 1995 was due to an effort of a Northeast region WBCCI Airstream travel club who surveyed its members and submitted all five of the complaints to ODI. The second complaint concentration in year 2000 was due to the efforts of the petitioner's Southeast region Airstream travel club safety committee in conjunction with ODI personnel during the February 2000 RV Rally in Sarasota, Florida. The inspections and field survey during the rally resulted in the submission of five of the six CY 2000 complaints in the ODI database. Otherwise, ODI has received only one or two complaints per year on the subject vehicles.

[4] Various Trailering Guides: Ford 2000 RV & Trailer Towing Guide (8/99); Reese 'Hitching-Up Procedure' distributed during Airstream RV rally in Sarasota, Florida (2/00); 1997 Airstream 34′ Excella Travel Trailer Owners Guide, Sections B and I on Hitching Up and Trailer Specifications; GM Suburban Owners Manuals, Section 4—'Towing a Trailer', MY 1993–1997; GM Suburban Sales Brochures, Section on Trailering, MY 1993–1997; and GMC Trailering Guides, MY 1993–1997.

[5] Discussions with SAE J684 Group Chairman, Mr. Jim Fait, during April and May of 2000.

TABLE 2.—ODI COMPLAINTS BY CALENDAR YEAR

Calendar year	CY95	CY96	CY97	CY98	CY99	CY00	Total
Suburban Total	5	1	0	2	1	6	15

Table 3 shows the complaint counts by model year for the subject vehicles equipped with the OEM installed hitch receivers. Among the fifteen Suburban complaints, eleven complainants were contacted during this petition analysis and they all reported towing 29′ and longer Airstream trailers having a listed Gross Vehicle Weight Rating (GVWR) ranging from 7,000 to 9,800 lb. Most of the complainants never weighed their trailer and do not know the actual gross trailer towing weight (trailer plus cargo in both the tow vehicle and trailer). One recent (CY 2000) complainant reported that prior to towing his current 31′ trailer, he was towing a 30′ long trailer when the trailer's wheels hit a large pothole on the road. The impact was severe enough to damage the trailer's frame and totally destroyed the trailer structure. After receiving the Airstream RV club's newsletter which asked members to inspect their hitch receivers, he found cracks in the hitch receiver. It is unclear whether the cracks were caused by the impact with the pothole or inappropriate loading, or initiated from incorrect installation and usage of the WD hitch system. ODI was unable to contact the other four complainants despite attempting to reach them at the addresses and telephone numbers they provided.

TABLE 3.—ODI COMPLAINTS AND COMPLAINT RATES ON THE SUBJECT VEHICLES AND PEER VEHICLES

Model year	MY92	MY93	MY94	MY95	MY96	MY97	Total	Pop. with hitch	Rate
Suburban Total	2	6	4	0	2	1	15	494K	3.0
Dodge PUs	1	0	0	3	0	0	4	495K	0.8

5.2 Complaints Submitted to ODI on Peer Vehicles

ODI has also searched for cracked hitch receiver complaints in its database on other MY 1992–1997 trucks and vans having similar towing capacities. Except for the Dodge D–150/250/350 and B–1500/2500/3500 series pickup trucks (see Table 3), ODI has received no more than one hitch receiver complaint on any other vehicle. The complaint rate for cracked hitch receivers on the Dodge truck with OEM hitch receivers is 0.8 per 100,000 vehicles [6] as compared with the subject vehicles' rate of 3.0 per 100,000 vehicles.

6.0 Inspection and Survey at the Recreational Vehicle (RV) Rally

6.1 Airstream RV Rally in Sarasota, Florida

ODI personnel, at the invitation of the petitioner and the Airstream Region 3 RV Safety Committee, attended a RV rally held in Sarasota, Florida during the period of February 15–21, 2000. Of the 600 RV participants towing a travel trailer at the RV rally, approximately 150 use the subject vehicle to tow a large 31′–34′ length Airstream travel trailer. Therefore, the percentage of large travel trailers among the 600 travel trailers at the Airstream RV rally was approximately 25%.

6.2 Physical Inspection of the Tow Vehicle Hitch Receivers

During the course of the RV rally, ODI and Airstream RV Safety Committee personnel made several announcements requesting each RV rally participant to inspect his/her hitch receiver for cracks. For those that responded, ODI and safety committee personnel visited them to further inspect their tow vehicles and trailers and to interview the owners. The Suburban was used as the tow vehicle in 21 of the 27 units inspected. Among these 21 units, 10 had cracked OEM hitch receivers, four had previously experienced cracked OEM hitch receivers and since had them replaced, and the remaining seven did not have any problems while using either the OEM or the non-OEM hitch receiver. The older MY 1993–1994 Suburbans accounted for six of the ten cracked receivers. Eight of the these 10 Suburban vehicles towed or previously towed the large 31′–34′ length Airstream travel trailer with GVWR near the 10,000 lb. limit.

Among the remaining six owners who didn't have the Suburban as their tow vehicle, there were two reports of cracked hitch receivers. Specifically, a MY 1995 and a MY 1996 Dodge pickup truck towing Airstream 30′ and 34′ travel trailers respectively.

6.3 Overloading in the RV Community

Present at this rally was the A'Weigh We Go (AWWG) weighing service. AWWG travels across North America to large rallies to provide an on-site weighing service and to give seminars on safe towing practices. RV manufacturers and tire companies partially sponsor AWWG to provide the weighing service at a nominal cost to the participants. AWWG [7] has weighed more than 10,000 vehicles and trailers in the past 10 years including motorhomes, tow vehicles, 5th wheel trailers, and travel trailers (TTs). The majority of the data collected were from motorhomes (5,462 units) and the least amount of data collected were from travel trailers (462 units). They found that overloading or improper matching of equipment and loading is a common problem in the RV communities. Among the 462 travel trailers they have weighed over this period, 54 percent of the tow vehicles and 51 percent of the TTs exceeded load limits in one or more of the loading limits such as the Gross Combination Weight Rating (GCWR), the Gross Vehicle Weight Rating (GVWR), Gross Axle Weight Rating (GAWR), Tire Load Rating (TLR) or net vertical hitch loading. AWWG noted the following concern in their handbook:

Of particular concern is that 57% (percent) were over GCWR, indicating that too many folks are trying to pull too much trailer with too little truck.

6.4 Weighing of Units at the Florida RV Rally

ODI contracted with AWWG to use their weighing services during the Florida RV rally. ODI then requested all of the Suburban owners with cracked hitch receivers and randomly selected a few of the owners without cracked hitch receivers to have their units weighed by the AWWG (at ODI's expense) at the conclusion of the RV rally. ODI instructed each owner to prepare the tow vehicle and trailer as they normally would for road travel. Prior to the day of departure, AWWG weighed each tow vehicle without the trailer attached. Then, on departure day, AWWG weighed the entire tow vehicle and trailer assembly at each wheel and axle. By measuring the loads at each wheel, AWWG can determine if the loads exceed any of the GCWR, GVWR, GAWR limits for both the tow vehicle and the trailer. AWWG also measured and calculated the total trailer towing weight and the net vertical loading on the tow vehicle. According to AWWG, the net vertical loading on the tow vehicle rear axis is roughly equal to the trailer tongue weight within an error of 50 lb.[8] By comparing the measured vehicle loads with the manufacturer's load limits, AWWG can

[6] Dodge light duty pickup truck population equipped with OEM hitch receivers suppled by DCX on 6/20/00.

[7] A'Weigh We Go Recreation Vehicle Weight & Tire Safety Handbook, Textbook Edition, Section I, Rev. 1/00.

[8] Discussons with AWWG president, Mr. J. Anderson, during March–April 2000. Data taken from AWWG's weighing of both tongue and vertical weighing of both tongue and vertical weights on travel trailers in early 1990's.

calculate the amount of 'weight margins' or 'weight overloading' in each of these areas.

During the RV rally, AWWG used calibrated commercial/industrial grade weighing scales that measure up to 20,000 lb. each with an accuracy to +/−50 lb.[9] Many law enforcement agencies use the same type of scale during their highway truck inspections. Throughout the weighing process, ODI personnel observed that AWWG was careful to keep the vehicle and/or trailer level during weighing in order to obtain the most accurate and consistent readings.

6.5 AWWG Data Review

AWWG weighed nine of the 10 Suburban vehicles with cracked OEM hitch receivers. One owner did not make his vehicle and trailer available for weighing. Eight of the nine weighed units showed overloading in at least one category. Note that these recorded load conditions represent only the load conditions while attending the week-long RV rally. Table 4 shows the various load conditions for each of the nine weighed units. The percentage of the rated load limit, shown as a ''+'' value, represents the margin within which the vehicle/trailer is below the maximum weight rating, and the percentage over the rated load limit, shown as a ''−'' value, represents overloading. Many owners exceeded weight limits in more than one rating. One owner (ID #1) exceeded six of the nine weight limits. Based on the weight data, overloading appeared to be a major contributing factor in cracked hitch receivers. The two vehicles listed at the bottom of the table (ID #8 & #9) that recorded the least amount of overloading and no overloading, respectively, had previously towed a larger and heavier 34′ travel trailer, and that may have been the cause of the cracked hitch receivers.

The remaining seven Suburban vehicles with cracked hitch receivers that were weighed had from one to six failed rating areas out of the possible nine areas. Additionally, six of these seven units exceeded either the 10,000 lb. trailer towing or 1,000 lb. tongue weight limits as specified on the OEM hitch receiver.

6.6 Weights of Large Travel Trailers

Many modern RV trailers have comforts and amenities that help make mobile traveling more like a home on wheels. Full size bedroom, kitchen, bath, recliner and sofa are standard on many 28′ or larger trailers. Many RV manufacturers can equip these trailers with additional options such as ceramic tile floors, stone counter tops, microwave oven, entertainment center, satellite/computer systems and room slide-outs. All these items add additional weight to the basic trailer. The more the trailer weight is above the empty Dry Weight condition, the less 'cargo' capacity is available to the consumer before reaching the trailer GVWR and the hitch receiver's towing limit. For example, Airstream rates their MY 2000 34′ length Limited travel trailers at 8,290 lb. Dry Weight and a GVWR of 9,800 lb. maximum[10] resulting in a Net Carrying Capacity (NCC) of only 1,510 lb. This NCC would include any additional dealer or owner-installed options, fluids, LP gas, personal items such as food, clothing, television, furniture, kitchen wares, books, and repair tools. In addition, relocating some loads from the trailer to the tow vehicle may help keep from exceeding the trailer's GVWR, but still diminishes the towing capacity of the hitch receiver from the 10,000 lb. maximum rating. Note that in a ''remote'' camping environment where there are no utilities, the camper may have the 54-gallon fresh water tank and the twin 20-gallon LP tanks filled to full capacities. These two items alone account for a combined weight of more than 600 lb. of the available NCC. In the Airstream web site,[11] the following disclaimer appears at the bottom of every page:

Vehicle Loading: Every effort has been made to provide the greatest number of options for the recreation vehicle owner. Along with these choices comes the responsibility to manage the loads that are imposed by the choices so that they remain within the manufacturer's specified chassis weight limits. Do not overload the recreation vehicle.

Dry weights based on standard features; optional equipment not included. Net carrying capacity (NCC) determined by subtracting unloaded vehicle weight (UVW) from gross vehicle weight (GVWR) and includes fluids, options and cargo. Liquid capacities and weights are approximations only.

Besides a safety seminar given by the RV club's safety committee at the Florida rally, AWWG also presented a safety seminar there. During the seminar, AWWG reported that ''the average couple carries about 2,000 lb. of stuff and the average full-timer, about 3,000 lb.'' which was documented in its handbook.[12] Many of the participants at the RV rally were retired ''full-timers,'' including all of the Suburban owners with cracked hitch receivers.

Although not included in Table 4, because the owners did not report any hitch receiver problems, seven other Suburban vehicles towing large trailers with OEM and non-OEM hitch receivers, including the one belonging to the petitioner, were also weighed by AWWG. The results showed that overloading is also common among these owners, but to a lesser extent.

While the WBCCI RV safety committee provides guidance to RV owners in the proper usage of towing a trailer and the need to regularly inspect the towing equipment, there are no Federal or state laws that require weighing of RV trailers while traveling the nation's interstates as there are for commercial trucks.

7.0 GM Data Review

At the request of ODI, GM supplied the following information[13] concerning the alleged defect. GM stated that the same hitch receiver design has been used during the entire production period of the subject vehicles (MY 1992–1997).

7.1 GM Owner Reports

Among the 494K MY 1992–1997 Suburban vehicles sold with OEM hitch receivers, GM has received 15 owner complaints, one accident claim, and has been named in two lawsuits related to the alleged defect in the subject vehicles. Excluding non-crack-related problems, duplicates of RV rally field survey reports and ODI complaints, Table 5 lists the nine cracked hitch receiver complaints from GM. The first reported litigation case involved a MY 1993 Suburban towing a 34 Airstream RV travel trailer. Prior to the case going to trial, the owner filed a 'notice of nonsuit' and the court dismissed the case in 1/99. ODI reviewed this same report in 1995 during its investigation (PE95–036). The other litigation report involved a MY 1995 Suburban that lost its trailer while hauling a load of pumpkins. The owner replaced the hitch receiver before a GM representative was able to verify the failure or determine the cause. The report claimed approximately $1800 in damages. The one accident claim was from the same owner as the first litigation report. GM also reported 154 warranty claims on the subject vehicles' hitch receiver. Based on the GM failure codes, ODI estimates that approximately 15 to 20 percent of the claims may involve cracks in the vertical mounting flange, but further detail is not available. None of the complaints or warranty reports indicate bodily injuries or vehicle crashes as a result of the cracked hitch receivers.

TABLE 4.—WEIGHT DATA/ANALYSIS ON THE NINE SUBURBAN HITCH RECEIVER CRACK FAILURES

ID	Tow vehicle	Trailer	Tow vehicle overload? (percent)				Trailer overload? (percent)			Hitch receiver overload? (percent)		
			Tow veh. GCWR	Tow veh. GVWR	Tow veh. GAWR	Tire load limit	Trailer GVWR	Trailer GAWR	Tire load limit	Trailer two Wt. 10,000 lb.	Vert. Wt. 1,000 lb.	Remarks
1	1994 Sub	34′ A/S	−4	99	92	−1	−16	−12	68	−23	−12	6 failed areas
2	1996 Sub	34′ A/S	99	−3	−12	94	−5	98	82	−15	−18	5 failed areas
3	1999 Sub	34′ A/S	−1	92	77	78	−3	−13	84	−17	1	4 failed areas

[9] AWWG Weighing Devices—Model WL 101, Range 0–20,000 lb., Class III Accuracy, Load-O-Meter Corporation, Baltimore, MD.

[10] Thor Industries, Inc. Airstream, An American Legend 2000 Sales Brochure.

[11] Thor Industries, Inc. Airstream Travel Internet web site at *http://www.airstream-rv.com* 5/00.

[12] A Weigh We Go Recreation Vehicle Weight & Tire Safety Handbook, Textbook Edition, Section VI, Rev. 1/00.

[13] General Motor response to ODI Information Request (IR), GM 583 of 3/00 and FAX of 5/00.

TABLE 4.—WEIGHT DATA/ANALYSIS ON THE NINE SUBURBAN HITCH RECEIVER CRACK FAILURES—Continued

ID	Tow vehicle	Trailer	Tow vehicle overload? (percent)				Trailer overload? (percent)			Hitch receiver overload? (percent)		
			Tow veh. GCWR	Tow veh. GVWR	Tow veh. GAWR	Tire load limit	Trailer GVWR	Trailer GAWR	Tire load limit	Trailer two Wt. 10,000 lb.	Vert. Wt. 1,000 lb.	Remarks
4	1993 Sub	31′ A/S	80	96	93	90	−7	0	88	82	−8	3 failed areas
5	1993 Sub	34′ A/S	92	−5	−10	90	99	98	63	−3	84	3 failed areas
6	1993 Sub	34′ A/S	91	86	−4	90	91	97	79	−1	88	2 failed areas
7	1995 Sub	30′ A/S	85	96	−1	85	95	93	99	91	65	1 failed area
8	1994 Sub	31′ A/S	86	80	80	67	−1	100	95	92	63	1 failed area
9	1996 Sub	30′ A/S	86	87	79	97	96	91	84	91	100	0 failed area

Notes:
GCWR—The Gross Combination Weight Rating (GCWR) is the maximum allowable combined weights from the tow vehicle and the trailer as specified by the vehicle manufacturer.
GVWR—The Gross Vehicle Weight Rating (GVWR) is the maximum allowable gross vehicle weight of the tow vehicle or trailer as specified by the manufacturer.
GAWR—The Gross Axle Weight Rating (GAWR) is the maximum allowable weight on each axle as specified by the manufacturer.
Tire Load Limit—The tire load limit is the maximum allowable load on each tire as specified by the manufacturer.
Trailer Tow Wt.—The trailer towing weight is the maximum allowable towing weight by the hitch receiver. It includes the trailer weight, as well as any additional occupant and cargo weights in the tow vehicle.
Vert. Wt.—The hitch vertical weight is the maximum net vertical loads on the rear axis after trailer hookup. According to AWWG, the vertical weight is approximately the same as the hitch tongue weight.

TABLE 5.—GM COMPLAINTS AND REPORTS ON HITCH RECEIVER CRACKING

ID	DOI	Tow vehicle	Trailer mileage	Trailer weight	Nature of failure	Est. damage cost	GM/dealer action
99–6701	6/99	’96 Sub	6K vehicle miles	32’ Jayco Est. 9K ι	1’’ crack both sides	Not Available (n/a).	100% Goodwill (G/W).
99–7801	8/99	’94 Sub	100K vehicle miles	Car Trailer Est. 6,5K ι.	Side plate broke off	$0.9K on trailer.	Denied.
99–6101	9/99	’94 Sub	Est. 120K tow miles	27 Jayco RV Est. 8K ι.	Broken & cracked	N/A	Denied.
99–7001	11/99	’95 Sub	45K vehicle miles	A/S trailer N/A	Broken & cracked	N/A	Under warranty.
99–0994	8/99	’96 Sub	43K vehicle miles	RV trailer N/A	Broken-trailer separation.	N/A	75% G/W.
99–4148	12/99	’94 Sub	57K vehicle miles	A/S trailer N/A	Cracked on both sides.	N/A	Denied.
99–1001	3/00	’93 Sub	Est. 60K tow miles	A/S 32’ trailer 6.5K+	Broken & cracked on both sides.	N/A	Denied.
99–6101	10/94	’93 Sub	160K vehicle miles	A/S trailer N/A	Broken & crack	N/A	Denied.

7.2 GM Hitch Receiver Design, Test and Performance Limits

During the development phase, GM conducted both nondestructive analysis and destructive testing on their hitch receiver design. This included Finite Element Analysis (FEA), static load testing and on-road durability tests. GM’s FEA, as well as the static load testing, support GM’s opinion that the hitch receiver will perform as designed. Both GM and other hitch receiver manufacturers use the same static load limits found in the SAE standard. In addition, GM successfully conducted a 6,500 mile on-road durability test with a Suburban towing a 10,000 lb. trailer having 1,000 lb. tongue weight over various road conditions without cracks or hitch receiver failure. According to GM, due to the course’s hilly terrain, this test is equivalent to 20,000 normal towing miles. It should be noted that GM does not identify the ‘‘towing rating with no cargo’’ limitation anywhere on the hitch receiver, on the vehicle, or in any of the pre-1996 owners’ manuals. However, this limitation is specified in their trailering guides.

7.3 GM’s Assessment of the Crack Hitch Receiver Problems

GM concluded that based on its data:

All test and analysis documents within GM’s possession indicate that the subject component will perform without failure in the field if load limitations are met. GM believes that loaded trailer weights in the field may exceed 10,000 lb. and that loaded trailer tongue weights in the field may exceed 1000 lb. It is GM’s belief that if the hitch platform is used within the confines as described by GM in various, readily available trailering usage documents, the subject component will perform without failure.

8.0 Conclusions

1. There are no Federal Motor Vehicle Safety Standards (FMVSS) or ‘‘National Highway Safety Standards for materials and construction specifications,’’ as indicated in the petition, relating to trailer hitch design. The SAE J684 trailering standard covers classification and testing of towing equipment. For Class IV hitch receivers, according to SAE J684, the static test loads take into account the dynamic loads experienced during normal towing operations.

2. An analysis of hitch receiver crack/failure complaints in the ODI consumer complaint database and those submitted by GM reveals a low number and rate of complaints and a lack of a complaint trend for the subject vehicles, as well as their peer vehicles.

3. A recent field survey and weighing of the tow vehicles and trailers conducted by ODI indicate that a combination of overloading, improper hitch setup, and adverse road conditions appears to be a major factor in hitch receiver failures. Eight of nine surveyed Suburban owners at the Florida RV rally had overloaded their vehicle/trailer in one or more areas that can affect the structural integrity of the hitch receiver platform.

4. GM information indicates that the hitch receiver design passes the same static loading levels as specified in SAE J684 and also passes their on-road durability test while towing of a 10,000 lb. trailer with 1,000 lb. tongue load. GM believes that overloading is the cause of the reported failures in the field.

5. ODI initiated an investigation on the same hitch receiver cracking problem in 1995, but closed it in October the same year because the total complaint rates were low and ODI could not identify a defect trend. Since then, ODI has found no new significant information on MY 1992–1997 Suburban vehicles to support reopening this investigation.

6. RV owners should be educated as to the seriousness of overloading their RVs and tow vehicles. This could be accomplished by initiating an extensive campaign by vehicle, RV manufacturers, RV club safety committees, and national RV associations to further define loading limits and industry-wide terminologies, to advise owners to avoid conditions leading to overloading of both the towing vehicle and trailer, to inspect their towing equipment periodically, and to install weight distributing hitch systems correctly.

7. Based on the information presented above, it is unlikely that NHTSA would issue an order for the notification and remedy of a safety-related defect in the subject vehicles at the conclusion of the investigation

requested in the petition. Therefore, in view of the need to allocate and prioritize NHTSA's limited resources to best accomplish the agency's safety mission, the petition is denied.

[FR Doc. 00–24584 Filed 9–22–00; 8:45 am]

BILLING CODE 4910–59–P

DEPARTMENT OF TRANSPORTATION

National Highway Traffic Safety Administration

[Docket No. NHTSA–2000–7164; Notice 2]

Suzuki Motor Corporation; Denial of Application for Decision of Inconsequential Noncompliance

Suzuki Motor Corporation of Hamamatsu, Japan, has determined that it manufactured 1,595 vehicles that fail to comply with Federal Motor Vehicle Safety Standard (FMVSS) No. 225, ''Child Restraint Anchorage Systems,'' and has filed an appropriate report pursuant to 49 CFR part 573, ''Defect and Noncompliance Reports.'' Suzuki has also applied to be exempted from the notification and remedy requirements of 49 U.S.C. Chapter 301—''Motor Vehicle Safety'' on the basis that the noncompliance is inconsequential to motor vehicle safety.

Notice of receipt of the application was published on April 25, 2000 in the **Federal Register** (65 FR 24253), with a 30-day comment period. We received no comments.

FMVSS No. 225, S4.1, requires that:

Each tether anchorage and each child restraint anchorage system installed, either voluntarily or pursuant to this standard, in any new vehicle manufactured on or after September 1, 1999, shall comply with the configuration, location, marking and strength requirements of this standard. The vehicle shall be delivered with written information, in English, on how to appropriately use those anchorages and systems.

FMVSS No. 225, S12, requires that:

The vehicle must provide written instructions, in English, for using the tether anchorages and the child restraint anchorage system in the vehicle. If the vehicle has an owner's manual, the instructions must be in that manual. The instructions shall:

(a) Indicate which seating positions in the vehicle are equipped with tether anchorages and child restraint anchorage systems;

(b) In the case of vehicles required to be marked as specified in paragraphs S4.1, S9.5(a), or S15.4, explain the meaning of markings provided to locate the lower anchorages of child restraint anchorage systems; and

(c) Include instructions that provide a step-by-step procedure, including diagrams, for properly attaching a child restraint system's tether strap to the tether anchorages.

At the start of production for the 2000 model year, Suzuki began installing user-ready tether anchorages as standard equipment in Suzuki Swift vehicles. Due to an oversight, however, Suzuki neglected to update the Suzuki Swift owner's manual in conjunction with this production change. As a result, the owner's manuals for 1,595 Suzuki Swift vehicles manufactured between August 1999 and February 2000, and shipped prior to March 2000, do not comply with the information requirements in FMVSS No. 225.

Suzuki supports its application for inconsequential noncompliance with the following:

''The vehicle owner's manual for the subject Suzuki Swift vehicles contains the following text relating to the use of child restraint systems that require use of a top tether:

Some child restraint systems require the use of a top strap. If you use such a restraint system and your vehicle is not equipped with the top tether strap anchor bracket, have your dealer install the top strap anchor bracket, or contact your dealer for instructions on how to install the anchor bracket.

In addition to the text message, the owner's manual contains two illustrations (one for the hatchback model and one for the sedan model) showing a child restraint system positioned at one of the rear seating positions, with its tether strap attached to the tether anchorage.

Although the Swift owner's manual does not mention that user-ready tether anchorages are provided as standard equipment and does not show all of the seating positions that are equipped with a tether anchorage, the illustrations in the manual do show the tether anchorage location for one of the rear seating positions. Suzuki believes that vehicle owners will assume, based on the illustrations, that anchorages are provided for both rear seating positions. In addition, when you look at the actual vehicle, it is obvious that user-ready anchorages are provided as standard equipment for both rear seating positions. Since the tether anchorages are easily recognizable in the vehicle, Suzuki believes that failure to fully illustrate the location of each tether anchorage in the vehicle owner's manual is inconsequential.

The Swift owner's manual also does not fully comply with the requirement to ''* * * provide a step-by-step procedure, including diagrams, for properly attaching a child restraint system to the tether anchorages* * *.'' Typically, because there are differences in child restraint system design, the vehicle owner's manual can only provide general instructions to hook the tether strap hook into the anchor bracket and tighten the tether strap. These steps are somewhat obvious, and should be intuitively understood by vehicle owners.

Also, each child restraint system is required to be accompanied with its own installation instructions. S5.6.1 of FMVSS No. 213, Child Restraint Systems, requires that each child restraint system ''* * * must be accompanied by printed installation instructions in the English language that provide a step-by-step procedure, including diagrams, for installing the system in motor vehicles * * *.''. Suzuki believes that vehicle owners rely on the installation instructions provided with the child restraint system, rather than those provided in the vehicle owner's manual, for information about how to install the child restraint system in their vehicle. As a result, Suzuki believes that failure to provide a step-by-step procedure, in the vehicle owner's manual, for attaching a child restraint system to the vehicle's tether anchorages is inconsequential to safety.''

We are denying Suzuki's application for the following reasons:

Suzuki failed to adhere to S4.1 of FMVSS No. 225, which requires that manufacturers shall specify tether anchorage configurations and locations in their vehicles along with written information on how to use those anchorages and systems appropriately. Suzuki also failed to meet the requirements of S12(a) and (c) of FMVSS No. 225, which specify that the information provided in the vehicle owner's manual must (a) indicate which seating positions in the vehicle are equipped with tether anchorages and (b) include instructions that provide step-by-step procedures, and diagrams for properly attaching a child restraint system's tether strap to the tether anchorages. Suzuki provides no excuse for its oversight in neglecting to update the 2000 model year Suzuki Swift owner's manual with the required information.

The agency does not agree with Suzuki that illustrating one child restraint system positioned at only one of the two rear seating positions, with its tether strap attached to the tether anchorage sufficiently demonstrates to the owner that in fact two rear seating positions are available for child restraints with tether installations. The agency further disagrees with Suzuki's assumption that the steps necessary for hooking the tether strap to the anchor bracket in the vehicle will be ''intuitively'' understood by vehicle owners. Child restraint systems with a top tether strap have only recently been introduced for use in this country, and requirements for tether anchorages have only applied to vehicles manufactured after September 1, 1999. Therefore, it is not likely that vehicle owners will be familiar with this new child restraint system feature on the child seat itself or its proper connection to the vehicle. The use of a top tether decreases the motion of a child restraint in a forward crash and therefore reduces the likelihood that the occupant child's head will impact hard interior surfaces of the

vehicle; hence, proper use of this feature improves the child occupant's protection.

As stated above, vehicle owners are not likely to be familiar with the purpose, use, or installation of top tethers in their vehicles, which may in some instances contribute to their misuse or nonuse of the top tether entirely when proper use and installation information is not provided. This may be especially true when specific information regarding the vehicle's tether anchor brackets is not made obvious to them when referring to their vehicle owner's manual for instruction.

Studies show that there is significant misuse of child restraint systems in this country. In part, this can be attributed to parents and care givers who improperly install child restraints in their vehicles. It is imperative that proper child restraint use and installation instructions be provided in a ''step-by-step'' fashion, particularly when new features and/or installation requirements are introduced, in as many resources as possible. Therefore, the agency cannot emphasize enough the importance of providing parents and care givers with specific information regarding proper child restraint use and installation.

The agency also does not agree with Suzuki's claim that because of differences in child restraint system designs, a vehicle owner's manual can only provide ''general instructions.'' We note that we denied a petition filed by the Alliance of Automobile Manufacturers (Alliance) on April 17, 1999, which asked the agency to delete the requirement in FMVSS No. 225 that vehicle manufacturers provide ''step-by-step'' instructions, including diagrams, for properly attaching a child restraint tether hook to the vehicle anchor. The agency denied this request on August 31, 1999, stating that ''* * * Standard No. 213 specifies the configuration and geometry of the tether hook * * *'' which would enable vehicle manufacturers to develop their written instructions with the tether hook design in mind (64 FR 47566). The Alliance submitted a subsequent petition for reconsideration request on October 15, 1999, which requested that the agency defer the effective date on the detailed instruction requirement one year from September 1, 1999. The agency denied this request in a notice published July 31, 2000 (65 FR 46628).

Therefore, in consideration of the foregoing, NHTSA has decided that the applicant has not met its burden of persuasion that the noncompliance it describes is inconsequential to motor vehicle safety, and it should not be exempted from the notification and remedy requirements of the statute. Accordingly, its application is hereby denied.

Authority: 49 U.S.C. 30118, 30120; delegations of authority at 49 CFR 1.50 and 501.8.

Issued on: September 19, 2000.

Stephen R. Kratzke,

Associate Administrator for Safety Performance Standards.

[FR Doc. 00–24551 Filed 9–22–00; 8:45 am]

BILLING CODE 4910–59–P

DEPARTMENT OF TRANSPORTATION

[STB Ex Parte No. 634]

Consolidated Railroad Reporting

AGENCY: Surface Transportation Board, DOT.

ACTION: Proposal to Require Consolidated Financial Reporting by Commonly Controlled Railroads.

SUMMARY: The Board intends, consistent with Financial Accounting Standards Board (FASB) Statement No. 94, to require consolidated reporting by commonly controlled U.S. railroads and their U.S. railroad-related affiliates.

DATES: Carriers and other interested parties may submit comments by October 25, 2000.

ADDRESSES: An original plus 10 copies of all comments, referring to STB Ex Parte No. 634, must be sent to: Surface Transportation Board, Office of the Secretary, Case Control Unit, Attn: STB Ex Parte No. 634, 1925 K Street, NW., Washington, DC 20423–0001. In addition, parties must submit to the Board, on 3.5-inch IBM-compatible floppy diskettes (in, or convertible by and into, WordPerfect 9.0 format), an electronic copy of each such paper document. The diskettes shall be clearly labeled with the filer's name and the docket number of this proceeding, STB Ex Parte No. 634. Any party may seek a waiver from the electronic submission requirement.[1]

Copies of the written comments will be available from the Board's contractor, Da-To-Da Office Solutions, 1925 K Street, NW, Room 405, Washington, DC. 20423–0001, phone (202) 466–5530. The comments will also be available for viewing and self copying in the Board's Microfilm Unit, Room 755. All pleadings submitted will be posted on the Board's website (*www.stb.dot.gov*).

[1] Documents transmitted by facsimile (FAX) or electronic mail (e-mail) will not be accepted.

FOR FURTHER INFORMATION CONTACT: Paul A. Aguiar, (202) 565–1527. [Assistance for the hearing impaired is available through TDD services: 1–800–877–8339.]

SUPPLEMENTARY INFORMATION: FASB is the organization responsible for the development of financial accounting standards. FASB issues statements of financial accounting standards that provide guidance on proper accounting procedures.[2] Those pronouncements typically become ''Generally Accepted Accounting Principles'' or ''GAAP.'' The Board, like most regulatory agencies, generally follows GAAP.

FASB No. 94, *Consolidation of All Majority-owned Subsidiaries*, which was issued in 1987, requires the preparer of financial statements to use consolidated reporting for all majority-owned subsidiaries unless control is temporary or does not rest with the majority owner. In *Supplemental Reporting of Information for Revenue Adequacy*, 5 I.C.C.2d 65 (1988) (*Supplemental Reporting*), our predecessor, the Interstate Commerce Commission (ICC), required railroads to use consolidated reporting for all railroad and railroad-related activities in conformance with GAAP for ''revenue adequacy'' purposes.[3] While *Supplemental Reporting* was primarily concerned with gathering data for the annual railroad revenue adequacy determination, the ICC did not specifically limit adoption of consolidated reporting to only that issue. However, as a practical matter, over the past decade that decision has been interpreted to require mandatory consolidated reporting only for Annual Report Form R–1, Schedule 250 (related to revenue adequacy filings), and to permit—but not require—consolidated reporting for other R–1 schedules and reports filed with the agency.[4]

We believe that we should adopt FASB No. 94 (with some modifications) and require reporting of all railroad and railroad-related activities on a consolidated basis for all regulatory purposes. We believe that consolidated data would provide more meaningful and accurate information on major rail systems operating in the United States. Indeed, consolidated financial statements are generally recognized as being more meaningful than the

[2] FASB statements can be obtained by contacting the FASB of the Financial Accounting Foundation at 401 Merritt 7, P.O. Box 5116, Norwalk, Connecticut 06856–5116. Information about FASB statements can be found on the internet at: http://www.rutgers.edu/accounting/raw/fasb.

[3] The STB is required by statute to ''annually determine which rail carriers are earning adequate revenues.'' 49 U.S.C. 10704(a)(3).

[4] *See* 49 CFR Part 1201 Instruction 1–9(f).

separate statements of affiliated companies. Furthermore, adherence to FASB No. 94 for all regulatory reporting purposes would be in keeping with our general policy of following GAAP unless such procedures are inconsistent with our regulatory requirements.

Certain modifications to FASB No. 94 would seem to be appropriate for our use, however. FASB No. 94 generally requires consolidated reporting for all majority-owned subsidiaries,[5] whether or not operating in the United States. For our regulatory reporting purposes, however, we would require consolidated reports for only the activities of commonly controlled U.S. railroads and their U.S. railroad-related affiliates.[6] We would not expect data on non-U.S. railroads and on non-railroad related operations to be included in consolidated reports filed with the Board.[7] Parties may comment on this issue, and on whether there are situations in which railroads under common control ought not to be required to report on a consolidated basis (for example, where the railroads under common control have no connection with one another except for a common parent).

We propose to require all railroads to follow FASB No. 94 standards in their reporting and to file reports on a consolidated basis, beginning with calendar year 2001 operations. This approach could change the ''classification'' status of some railroads,[8] whose revenues would be combined with the revenues of their corporate siblings to determine whether the railroads that are part of the commonly controlled families should be classified as Class I, Class II, or Class III.[9]

Carriers and other interested parties have 30 days following the issuance of this notice to submit comments regarding this proposal. After considering the comments, we will decide whether use of the FASB No. 94 standards will be mandated for all railroad reporting.[10]

This action will not significantly affect either the quality of the human environment or the conservation of energy resources.

Decided: September 18, 2000.

By the Board, Chairman Morgan, Vice Chairman Burkes, and Commissioner Clyburn.

Vernon A. Williams,

Secretary.

[FR Doc. 00–24583 Filed 9–22–00; 8:45 am]

BILLING CODE 4915–00–P

[5] Under GAAP, consolidated reporting is required when an entity has greater than 50 percent (direct or indirect) ownership of an affiliate.

[6] An affiliate is considered rail-related if it could not exist but for the revenues derived from, or support provided for, railroad operations. *See Supplemental Reporting*, 5 I.C.C.2d at 67–68.

[7] Indeed, when non-railroad-related activities are included in carrier reports to facilitate complete disclosure, the non-railroad-related activities should be segregated and the information reported separately.

[8] Railroads are classified according to their revenues. A Class I railroad is one that has annual revenues of at least $250 million, as indexed for inflation. A Class II railroad has inflation-adjusted annual revenues between $20 million and $250 million. And a Class III railroad has inflation-adjusted revenues below $20 million. *See* 49 CFR 1201, General Instruction 1–1.

[9] The parent of the commonly controlled railroads, whether that parent is a railroad or non-railroad, would be required to file consolidated financial reports. *See* 49 U.S.C. 721(b) (authorization for the collection of data from persons controlling a carrier). And if a family of carriers were to attain Class I status, it would be required to follow the Uniform System of Accounts (49 CFR Part 1201) and to file a variety of reports (49 CFR Part 1241–1248).

[10] Some Class I railroads currently file consolidated reports with the STB.

DEPARTMENT OF TRANSPORTATION

Surface Transportation Board

[STB Docket No. AB–55 (Sub–No. 580X)]

CSX Transportation, Inc.—Abandonment Exemption—in Muhlenberg and McLean Counties, KY

On September 5, 2000, CSX Transportation, Inc. (CSXT) filed with the Surface Transportation Board (Board) a petition under 49 U.S.C. 10502 for exemption from the provisions of 49 U.S.C. 10903 to abandon a portion of its line of railroad in the Midwest Region, known as its Nashville Division, O&N Nashville Subdivision, extending from railroad Milepost 00D–186.35 near Moorman in Muhlenberg County, KY, to railroad Milepost 00D–193.83 near Livermore in McLean County, KY, a distance of 7.48 miles. The line traverses United States Postal Service ZIP Codes 42327 and 42352 and includes no stations.

The line does not contain federally granted rights-of-way. Any documentation in the railroad's possession will be made available promptly to those requesting it.

The interest of railroad employees will be protected by the labor protective conditions imposed in *Oregon Short Line R. Co.—Abandonment—Goshen*, 360 I.C.C. 91 (1979).

By issuing this notice, the Board is instituting an exemption proceeding pursuant to 49 U.S.C. 10502(b). A final decision will be issued by December 22, 2000.

Any offer of financial assistance (OFA) under 49 CFR 1152.27(b)(2) will be due no later than 10 days after service of a decision granting the petition for exemption. Each offer must be accompanied by a $1,000 filing fee. *See* 49 CFR 1002.2(f)(25).

All interested persons should be aware that, following abandonment of rail service and salvage of the line, the line may be suitable for other public use, including interim trail use. Any request for a public use condition under 49 CFR 1152.28 or for trail use/rail banking under 49 CFR 1152.29 will be due no later than October 16, 2000. Each trail use request must be accompanied by a $150 filing fee. *See* 49 CFR 1002.2(f)(27).

All filings in response to this notice must refer to STB Docket No. AB–55 (Sub-No. 580X) and must be sent to: (1) Surface Transportation Board, Office of the Secretary, Case Control Unit, 1925 K Street, NW., Washington, DC 20423–0001; and (2) Natalie S. Rosenberg, 500 Water Street-J150, Jacksonville, FL 32202. Replies to the CSXT petition are due on or before October 16, 2000.

Persons seeking further information concerning abandonment procedures may contact the Board's Office of Public Services at (202) 565–1592 or refer to the full abandonment or discontinuance regulations at 49 CFR part 1152. Questions concerning environmental issues may be directed to the Board's Section of Environmental Analysis (SEA) at (202) 565–1545. [TDD for the hearing impaired is available at 1–800–877–8339.]

An environmental assessment (EA) (or environmental impact statement (EIS), if necessary) prepared by SEA will be served upon all parties of record and upon any agencies or other persons who commented during its preparation. Other interested persons may contact SEA to obtain a copy of the EA (or EIS). EAs in these abandonment proceedings normally will be made available within 60 days of the filing of the petition.

The deadline for submission of comments on the EA will generally be within 30 days of its service.

Board decisions and notices are available on our website at ''WWW.STB.DOT.GOV.''

Decided: September 15, 2000.

By the Board, David M. Konschink, Director, Office of Proceedings.

Vernon A. Williams,

Secretary.

[FR Doc. 00–24321 Filed 9–22–00; 8:45 am]

BILLING CODE 4915–00–P

DEPARTMENT OF THE TREASURY

Submission for OMB Review; Comment Request

September 18, 2000.

The Department of the Treasury has submitted the following public information collection requirement(s) to OMB for review and clearance under the Paperwork Reduction Act of 1995, Public Law 104–13. Copies of the submission(s) may be obtained by calling the Treasury Bureau Clearance Officer listed. Comments regarding this information collection should be addressed to the OMB reviewer listed and to the Treasury Department Clearance Officer, Department of the Treasury, Room 2110, 1425 New York Avenue, NW., Washington, DC 20220.

DATES: Written comments should be received on or before October 25, 2000 to be assured of consideration.

Bureau of the Public Debt (PD)

OMB Number: 1535–0048.
Form Number: PD F 0385 and PD F 385–1.
Type of Review: Extension.
Title: Certificate of Identity of Owner of Registered Securities (PD F 0385); and Certificate of Identity of Owner of Savings and Retirement (PD F 0385–1).
Description: The form is used to establish the identity of the owner of U.S. Savings Bonds or Registered Securities.
Respondents: Individuals or households.
Estimated Number of Respondents: 177.
Estimated Burden Hours Per Respondent: 30 minutes.
Frequency of Response: On occasion.
Estimated Total Reporting Burden Hours: 89 hours.

OMB Number: 1535–0058.
Form Number: PD F 1646.
Type of Review: Extension.
Title: Application for Disposition United States Registered Securities and Related Checks Without Administration of Deceased Owner's Estate.
Description: The form is used by person(s) entitled to a decedent's estate not being administered to request disposition of U.S. Registered Securities and related checks.
Respondents: Individuals or households.
Estimated Number of Respondents: 625.
Estimated Burden Hours Per Respondent: 1 hour, 30 minutes.
Frequency of Response: On occasion.
Estimated Total Reporting Burden Hours: 938 hours.

OMB Number: 1535–0063.
Form Number: PD F 4239.
Type of Review: Extension.
Title: Request by Owner or Person Entitled to Payment or Reissue of United States Savings Bonds/Notes Deposited in Safekeeping When Original Custody Receipts Are Not Available.
Description: The form is used by owner or persons entitled to request reissue or payment of U.S. Savings Bonds/Notes deposited in safekeeping when original custody receipts are not available.
Respondents: Individuals or households.
Estimated Number of Respondents: 500.
Estimated Burden Hours Per Respondent: 10 minutes.
Frequency of Response: On occasion.
Estimated Total Reporting Burden Hours: 84 hours.

OMB Number: 1535–0100.
Form Number: PD F 4094.
Type of Review: Extension.
Title: Affidavit by Individual Surety.
Description: The form serves as an affidavit from individuals who agree to act as surety for an indemnification agreement on a Bonds of Indemnity submitted in support of a claim for lost, stolen or destroyed U.S. Registered Securities.
Respondents: Individuals or households.
Estimated Number of Respondents: 500.
Estimated Burden Hours Per Respondent: 55 minutes.
Frequency of Response: On occasion.
Estimated Total Reporting Burden Hours: 460 hours.

OMB Number: 1535–0120.
Form Number: PD F 5366, PD F 5354 and PD F 5367.
Type of Review: Extension.
Title: FHA New Account Request (PD F 5366); FHA Transaction Request (PD F 5354); and FHA Debenture Transfer Request (PD F 5367).
Description: The forms are used to (1) establish a book-entry account; (2) change information on a book-entry account; and (3) transfer ownership of a book-entry account.
Respondents: Individuals or households, Business or other for-profit.
Estimated Number of Respondents: 600.
Estimated Burden Hours Per Respondent: 10 minutes (for each form).
Frequency of Response: On occasion.
Estimated Total Reporting Burden Hours: 102 hours.

Clearance Officer: Vicki S. Thorpe, (304) 480–6553, Bureau of the Public Debt, 200 Third Street, Parkersburg, West VA 26106–1328.

OMB Reviewer: Alexander T. Hunt, (202) 395–7860, Office of Management and Budget, Room 10226, New Executive Office Building, Washington, DC 20503.

Lois K. Holland,
Departmental Reports Management Officer

[FR Doc. 00–24496 Filed 9–22–00; 8:45 am]

BILLING CODE 4810–40–P

DEPARTMENT OF THE TREASURY

Submission for OMB Review; Comment Request

September 18, 2000.

The Department of Treasury has submitted the following public information collection requirement(s) to OMB for review and clearance under the Paperwork Reduction Act of 1995, Public Law 104–13. Copies of the submission(s) may be obtained by calling the Treasury Bureau Clearance Officer listed. Comments regarding this information collection should be addressed to the OMB reviewer listed and to the Treasury Department Clearance Officer, Department of the Treasury, Room 2110, 1425 New York Avenue, NW., Washington, DC 20220.

Dates: Written comments should be received on or before October 25, 2000 to be assured of consideration.

Internal Revenue Service (IRS)

OMB Number: 1545–0231.
Form Number: IRS Form 6478.
Type of Review: Revision.
Title: Credit for Alcohol Used as Fuel.
Description: Internal Revenue Code (IRC) section 38(b)(3) allows a nonrefundable income tax credit for businesses that sell or use alcohol. Small ethanol producers also receive a nonrefundable credit for production of qualified ethanol. Form 6478 is used to figure the credits.
Respondents: Business or other for-profit.
Estimated Number of Respondents/Recordkeepers: 1,594.
Estimated Burden Hours Per Respondent/Recordkeeper:

Recordkeeping—11 hr., 58 min.
Learning about the law or the form—17 min.
Preparing, copying, assembling and sending the form to the IRS—1 hr., 30 min.

Frequency of Response: Annually.
Estimated Total Reporting/Recordkeeping Burden: 20,339 hours.
OMB Number: 1545–0393.
Form Number: Letter 109C.
Type of Review: Extension.
Title: Return Requesting Refund Unlocatable or Not Filed; Send Copy.

Description: The code requires tax returns to be filed. It also authorizes IRS to refund any overpayment of tax. If a taxpayer inquires about their non-receipt or refund and no return is found, this letter is sent requesting the taxpayer to file another return.

Respondents: Business or other for-profit, Individuals or households, Not-for-profit institutions.

Estimated Number of Respondents: 18,223.

Estimated Burden Hours Per Respondent: 5 minutes.

Frequency of Response: On occasion.

Estimated Total Reporting Burden: 1,513 hours.

OMB Number: 1545–0984.

Form Number: IRS Form 8586.

Type of Review: Revision.

Title: Low-Income Housing Credit.

Description: The Tax Reform Act of 1986 (Code section 42) permits owners of residential rental projects providing low-income housing to claim a credit against income tax for part of the cost of constructing or rehabilitating such low-income housing. Form 8586 is used by taxpayers to compute the credit and by IRS to verify that the correct credit has been claimed.

Respondents: Individuals or households, Business or other for-profit.

Estimated Number of Respondents/Recordkeepers: 168,137.

Estimated Burden Hours Per Respondent/Recordkeeper:

Recordkeeping—7 hr., 39 min.
Learning about the law or the form—1 hr., 38 min.
Preparing the form—3 hr., 41 min.
Copying, assembling, and sending the form to the IRS—32 min.

Frequency of Response: Annually.

Estimated Total Reporting/Recordkeeping Burden: 2,271,531 hours.

OMB Number: 1545–1444.

Form Number: IRS Form 8844.

Type of Review: Revision.

Title: Empowerment Zone Employment Credit.

Description: Employers who hire employees who live and work in one of the 11 designated empowerment zones can receive a tax credit for the first $15,000 of wages paid to each employee. The credit is applicable from the date of designation through the year 2004.

Respondents: Business or other for-profit, Individuals or households, Not-for-profit institutions, Farms.

Estimated Number of Respondents/Recordkeepers: 40,000.

Estimated Burden Hours Per Respondent/Recordkeeper:

Recordkeeping—9 hr., 5 min.
Learning about the law or the form—2 hr., 29 min.
Preparing and sending the form to the IRS—2 hr., 44 min.

Frequency of Response: Annually.

Estimated Total Reporting/Recordkeeping Burden: 572,400 hours.

OMB Number: 1545–1560.

Regulation Project Number: REG–246250–96 Final.

Type of Review: Extension.

Title: Public Disclosure of Material Relating to Tax-Exempt Organizations.

Description: The collections of information is section 301.6104(d)–3, 301–6104–4 and 301.6104(d)–5 are necessary so that tax-exempt organizations can make copies of their applications for tax exemption and annual information returns available to the public.

Respondents: Not-for-profit institutions.

Estimated Number of Respondents/Recordkeepers: 1,100,000.

Estimated Burden Hours Per Respondent/Recordkeepers: 30 minutes.

Frequency of Response: On occasion.

Estimated Total Reporting/Recordkeeping Burden: 551,500 hours.

OMB Number: 1545–1693.

Form Number: IRS Form 8871.

Type of Review: Extension.

Title: Political Organization Notice of Section 527 Status.

Description: Internal Revenue Code section 527, as amended by Public Law 106–230, requires certain political organizations to provide information to the IRS regarding their name and address, their purpose, and the names and addresses of their officers, highly compensated employees, Board of Directors, and any related entities (within the meaning of section 168(h)(4)). Form 8871 is used for this purpose.

Respondents: Not-for-profit institutions.

Estimated Number of Respondents/Recordkeepers: 10,000.

Estimated Burden Hours Per Respondent/Recordkeeper:

Recordkeeping—3 hr., 7 min.
Learning about the law or the form—35 min.
Preparing, copying, assembling, and sending the form to the IRS—41 min.

Frequency of Response: On occasion.

Estimated Total Reporting/Recordkeeping Burden: 43,800 hours.

Clearance Officer: Garrick Shear, Internal Revenue Service Room 5244, 1111 Constitution Avenue, NW. Washington, DC 20224.

OMB Reviewer: Alexander T. Hunt, (202) 395–7860, Office of Management and Budget, Room 10202, New Executive Office Building, Washington, DC 20503.

Lois K. Holland,

Departmental Reports Management Officer.

[FR Doc. 00–24497 Filed 9–22–00; 8:45 am]

BILLING CODE 4830–01–U

DEPARTMENT OF THE TREASURY

Submission for OMB Review; Comment Request

September 18, 2000.

The Department of Treasury has submitted the following public information collection requirement(s) to OMB for review and clearance under the Paperwork Reduction Act of 1995, Public Law 104–13. Copies of the submission(s) may be obtained by calling the Treasury Bureau Clearance Officer listed. Comments regarding this information collection should be addressed to the OMB reviewer listed and to the Treasury Department Clearance Officer, Department of the Treasury, Room 2110, 1425 New York Avenue, NW., Washington, DC 20220.

DATES: Written comments should be received on or before October 25, 2000 to be assured of consideration.

Internal Revenue Service (IRS)

OMB Number: 1545–0054.

Form Number: IRS Form 1000.

Type of Review: Extension.

Title: Ownership Certificate.

Description: Form 1000 is used by citizens, resident individuals, fiduciaries, partnerships and nonresident partnerships in connection with interest on bonds of a domestic, resident foreign, or nonresident foreign corporation containing a tax-free covenant and issued before January 1, 1934. IRS uses the information to verify that the correct amount was withheld.

Respondents: Business or other for-profit, Individuals or households.

Estimated Number of Respondents/Recordkeepers: 1,500.

Estimated Burden Hours Per Respondent/Recordkeeper: 3 hr., 22 min.

Frequency of Response: On occasion.

Estimated Total Reporting/Recordkeeping Burden: 5,040 hours.

OMB Number: 1545–0142.

Form Number: IRS Form 2220.

Type of Review: Extension.

Title: Underpayment of Estimated Tax by Corporations.

Description: Form 2220 is used by corporations to determine whether they are subject to the penalty for underpayment of estimated tax and, if so, the amount of the penalty. The IRS

uses Form 2220 to determine if they penalty was correctly computed.

Respondents: Business or other for-profit, Farms.

Estimated Number of Respondents/ Recordkeepers: 702,000.

Estimated Burden Hours Per Respondent/Recordkeeper:

Form	Recordkeeping	Learning about the law and the form (in minutes)	Preparing and sending the form to the IRS (in minutes)
2220	26 hr., 33 min	5	34
2220, Schedule A, Part I	11 hr., 14 min	12	23
2220, Schedule A, Part II	23 hr., 26 min	0	22
2220, Schedule A, Part III	5 hr., 15 min	0	5

Frequency of Response: Annually.

Estimated Total Reporting/ Recordkeeping Burden: 20,557,607 hours.

OMB Number: 1545–0717.

Form Number: IRS Form W–4S.

Type of Review: Extension.

Title: Request for Federal Income Tax Withholding From Sick Pay.

Description: Section 3402(o) of the Internal Revenue Code extends income tax withholding to sick pay payments made by third parties upon request of the payee. The information is used to determine the amount to be withheld from the third-party sick pay payment.

Respondents: Individuals or households.

Estimated Number of Respondents/ Recordkeepers: 500,000.

Estimated Burden Hours Per Respondent/Recordkeeper:

Recordkeeping: 39 min.

Learning about the law or the form: 10 min.

Preparing the form: 25 min.

Copying, assembling, and sending the form to the IRS: 16 min.

Frequency of Response: On occasion.

Estimated Total Reporting/ Recordkeeping Burden: 765,000 hours.

Clearance Officer: Garrick Shear, Internal Revenue Service, Room 5244, 1111 Constitution Avenue, NW, Washington, DC 20224.

OMB Reviewer: Alexander T. Hunt, (202) 395–7860, Office of Management and Budget, Room 10202, New Executive Office Building, Washington, DC 20503.

Lois K. Holland,

Departmental Reports, Management Officer.

[FR Doc. 00–24498 Filed 9–22–00; 8:45 am]

BILLING CODE 4830–01–U

DEPARTMENT OF THE TREASURY

Submission for OMB Review; Comment Request

September 14, 2000.

The Department of Treasury has submitted the following public information collection requirement(s) to OMB for review and clearance under the Paperwork Reduction Act of 1995, Public Law 104–13. Copies of the submission(s) may be obtained by calling the Treasury Bureau Clearance Officer listed. Comments regarding this information collection should be addressed to the OMB reviewer listed and to the Treasury Department Clearance Officer, Department of the Treasury, Room 2110, 1425 New York Avenue, NW., Washington, DC 20220.

DATES: Written comments should be received on or before October 25, 2000 to be assured of consideration.

Internal Revenue Service (IRS)

OMB Number: 1545–1680.

Form Number: IRS Form 706–D.

Type of Review: Extension.

Title: United States Additional Estate Tax Return Under Code Section 2057.

Description: Form 706–D is used by individuals to compute and pay the additional taxes due under Code section 2057. IRS uses the information to determine that the taxes have been properly computed.

Respondents: Individuals or households.

Estimated Number of Respondents: 180.

Estimated Burden Hours Per Respondent/Recordkeeper:

Recordkeeping: 40 min.

Learning about the law or the form: 40 min.

Preparing the form: 56 min.

Copying, assembling, and sending the form to the IRS: 35 min.

Frequency of Response: Other (Section 2057 taxable event.)

Estimated Total Reporting/ Recordkeeping Burden: 511 hours.

Clearance Officer: Garrick Shear, Internal Revenue Service, Room 5244, 1111 Constitution Avenue, NW., Washington, DC 20224.

OMB Reviewer: Alexander T. Hunt (202) 395–7860, Office of Management and Budget, Room 10202, New Executive Office Building, Washington, DC 20503.

Mary A. Able,

Departmental Reports, Management Officer.

[FR Doc. 00–24499 Filed 9–22–00; 8:45 am]

BILLING CODE 4830–01–U

DEPARTMENT OF VETERANS AFFAIRS

[OMB Control No. 2900–0572]

Proposed Information Collection Activity: Proposed Collection; Comment Request

AGENCY: Veterans Benefits Administration, Department of Veterans Affairs.

ACTION: Notice.

SUMMARY: The Veterans Benefits Administration (VBA), Department of Veterans Affairs (VA) is announcing an opportunity for public comment on the proposed collection of information by the agency. Under the Paperwork Reduction Act (PRA) of 1995, Federal agencies are required to publish notice in the **Federal Register** concerning each proposed collection of information, including each proposed reinstatement, without change, of a previously approved collection for which approval has expired, and allow 60 days for public comment in response to the notice. This notice solicits comments on information needed to determine the monetary allowance for a child born with spina bifida who is the natural child of a Vietnam veteran.

DATES: Written comments and recommendations on the proposed collection of information should be received on or before November 24, 2000.

ADDRESSES: Submit written comments on the collection of information to Nancy J. Kessinger, Veterans Benefits Administration (20S52), Department of Veterans Affairs, 810 Vermont Avenue, NW., Washington, DC 20420. Please refer to ''OMB Control No. 2900–0572'' in any correspondence.

FOR FURTHER INFORMATION CONTACT: Nancy J. Kessinger at (202) 273–7079 or FAX (202) 275–5947.

SUPPLEMENTARY INFORMATION: Under the PRA of 1995 (Public Law 104–13; 44 U.S.C., 3501–3520), Federal agencies must obtain approval from the Office of Management and Budget (OMB) for each collection of information they conduct or sponsor. This request for comment is being made pursuant to Section 3506(c)(2)(A) of the PRA.

With respect to the following collection of information, VBA invites comments on: (1) Whether the proposed collection of information is necessary for the proper performance of VBA's functions, including whether the information will have practical utility; (2) the accuracy of VBA's estimate of the burden of the proposed collection of information; (3) ways to enhance the quality, utility, and clarity of the information to be collected; and (4) ways to minimize the burden of the collection of information on respondents, including through the use of automated collection techniques or the use of other forms of information technology.

Title: Application for Spina Bifida Benefits, VA Form 21–0304.

OMB Control Number: 2900–0572.

Type of Review: Reinstatement, without change, of a previously approved collection for which approval has expired.

Abstract: The law allows VA to pay a monetary allowance to a child born with spina bifida who is a natural child of a veteran who served in the Republic of Vietnam during the Vietnam era. The form is used to gather information to determine eligibility for the monetary allowance and appropriate level of payment.

Affected Public: Individuals or households.

Estimated Annual Burden: 335 hours.

Estimated Average Burden Per Respondent: 10 minutes.

Frequency of Response: On occasion.

Estimated Number of Respondents: 2,000.

Dated: August 25, 2000.

By direction of the Acting Secretary.

Donald L. Neilson,

Director, Information Management Service.

[FR Doc. 00–24526 Filed 9–22–00; 8:45 am]

BILLING CODE 8320–01–P

DEPARTMENT OF VETERANS AFFAIRS

Performance Review Board Members

AGENCY: Department of Veterans Affairs.

ACTION: Notice.

SUMMARY: Under the provisions of 5 U.S.C. 4314(c)(4) agencies are required to publish a notice in the **Federal Register** of the appointment of Performance Review Board (PRB) members. This notice revises the list of members of the Department of Veterans Affairs (VA) Performance Review Boards which was published in the **Federal Register** on November 6, 1998 (62 FR 60047).

EFFECTIVE DATE: September 25, 2000.

FOR FURTHER INFORMATION CONTACT: Angel I. Wolfrey, Office of Human Resources Management (052B), Department of Veterans Affairs, 810 Vermont Avenue, NW., Washington, DC 20420, (202) 273–4940.

VA Performance Review Board (PRB)

Eugene A. Brickhouse, Assistant Secretary for Human Resources and Administration (Chairperson)
Joan A. Furey, Director, Center for Women Veterans
Nora E. Egan, Deputy Under Secretary for Management, Veterans Benefits Administration
John H. Thompson, Deputy General Counsel
Frances M. Murphy, M.D., M.P.H., Acting Deputy Under Secretary for Health, Veterans Health Administration
Ventris C. Gibson, Deputy Assistant Secretary for Resolution Management
John T. Hanson, Assistant Secretary for Public and Intergovernmental Affairs
W. Todd Grams, Deputy for Management
Michael G. Sullivan, Deputy Inspector General
Roger R. Rapp, Director, Field Operations, National Cemetery System
Patrick Nappi, Deputy Under Secretary for Operations, Veterans Benefits Administration (Alternate)
Thomas L. Garthwaite, M.D., Under Secretary for Health (Alternate)
Helen H. Bolton, Deputy Assistant Secretary for Human Resources Management (Alternate)
Eileen T. Powell, Associate Deputy Assistant Secretary for Financial Operations (Alternate)
Vincent L. Barile, Director, Operations Support, National Cemetery System (Alternate)

Veterans Benefits Administration PRB

Nora E. Egan, Deputy Under Secretary for Management (Chairperson)
Celia P. Dollarhide, Director, Education Service
Keith R. Pedigo, Director, Loan Guaranty Service
Michael Walcoff, Deputy Under Secretary for Operations (West)
James A. Whitson, Deputy Under Secretary for Operations (East)
Julius M. Williams, Director, Vocational Rehabilitation and Employment Service
Willie L. Hensley, Jr., Director, Center for Minority Veterans

Veterans Health Administration PRB

Frances M. Murphy, M.D., M.P.H. Acting Deputy Under Secretary for Health (Chairperson)
Kenneth J. Clark, Network Director, VISN 22, (Vice-Chairperson)
Terrence S. Batliner, D.D.S., Chief Network Director, VISN 19
Alfonso R. Batres, Ph.D., Chief Readjustment Counseling Officer
Linda W. Belton, Network Director, VISN 11
Lawrence A. Biro, Network Director, VISN 4
Jeanette A. Chirico-Post, M.D., Network Director, VISN 1
Vernon Chong, M.D., Network Director, VISN 17
Gary A. Christopherson, Chief Information Officer
Patricia A. Crosetti, Network Director, VISN 15
Joan E. Cummings, M.D., Network Director, VISN 12
John Dandridge, Jr., Network Director, VISN 9
Larry R. Deal, Network Director, VISN 7
Jim W. Delgado, Acting Chief Communications Officer
James B. Donahoe, Director, Veterans Canteen Service
James J. Farsetta, Network Director, VISN 3
John R. Feussner, M.D., Chief Research and Development Officer
Timothy C. Flynn, M.D., Acting Chief Academic Affiliations Officer
William T. Galey, M.D., Network Director, VISN 20
Daniel F. Hoffmann, Network Director, VISN 6
Thomas J. Hogan, Director, Management Support Office (Ex Officio)
Thomas V. Holohan, M.D., Chief Patient Care Services Officer
Smith Jenkins, Jr., Network Director, VISN 18
Robert E. Lynch, M.D., Network Director, VISN 16
Susan H. Mather, M.D., M.P.H., Chief Public Health and Environmental Hazards Officer

Frederick L. Malphurs, Network Director, VISN 2
Laura J. Miller, Network Director, VISN 10
Melinda L. Murphy, Director, VAMC Muskogee, OK
James J. Nocks, M.D., Network Director, VISN 5
Jimmy A. Norris, Chief Financial Officer
Gregg A. Pane, M.D., M.P.A., Chief Policy and Planning Officer
Robert A. Petzel, M.D., Network Director, VISN 13
Jonathan B. Perlin, M.D., Ph.D., M.S.H.A., Chief Quality and Performance Officer
Robert H. Roswell, M.D., Network Director, VISN 8
Stanley R. Sinclair, Dean, VA Learning University
Robert L. Wiebe, M.D., Network Director, VISN 21
Gary L. Wilkinson, Acting Network Director, VISN 14
Charles V. Yarbrough, Chief Facilities Management Officer
Willie L. Hensley, Jr., Director, Center for Minority Veterans

Office of Inspector General PRB

David A. Brinkman, Director, Audit Followup Directorate, Department of Defense (Chairperson)
Nancy Hendricks, Assistant Inspector General for Audit, Federal Emergency Management Agency
George Grob, Deputy Inspector General for Evaluation and Inspections, Department of Health and Human Services

Dated: September 15, 2000.

Hershel W. Gober,

Acting Secretary of Veterans Affairs.

[FR Doc. 00–24585 Filed 9–22–00; 8:45 am]

BILLING CODE 8320–01–M

Federal Register

Monday,
September 25, 2000

Part II

Department of Housing and Urban Development

24 CFR Part 888

Fair Market Rents for Fiscal Year 2001; Final Rule

DEPARTMENT OF HOUSING AND URBAN DEVELOPMENT

24 CFR Part 888

[Docket No. FR–4589–N–02]

Fair Market Rents for Fiscal Year 2001

AGENCY: Office of the Secretary, HUD.

ACTION: Notice of Final Fiscal Year (FY) 2001 Fair Market Rents (FMRs).

SUMMARY: Section 8(c)(1) of the United States Housing Act of 1937 requires the Secretary to publish FMRs annually to be effective on October 1 of each year. FMRs are used to establish payment standards for the Housing Choice Voucher program; to determine initial contract rents in new commitments for Section 8 project-based assistance (e.g., the project-based voucher program); to determine whether comparability applies to adjustment of contract rents during the term of an existing HAP contract in the Section 8 new construction, substantial rehabilitation and moderate rehabilitation programs; and as a limit on renewal rents for certain Section 8 projects. The FMRs also apply to any other programs requiring their use. Today's notice establishes final FY 2001 FMRs for all areas. These FMRs reflect the estimated 40th percentile rent levels trended to April 1, 2001.

EFFECTIVE DATE: The FMRs published in this notice are effective on October 1, 2000.

FOR FURTHER INFORMATION CONTACT: Gerald Benoit, Operations Division, Office of Rental Assistance, telephone (202) 708–0477. For technical information on the development of schedules for specific areas or the method used for the rent calculations, contact Lynn A. Rodgers, Economic and Market Analysis Division, Office of Economic Affairs, telephone (202) 708–0590, Extension 5735 (e-mail: Lynn_A._Rodgers @hud.gov). Hearing-or speech-impaired persons may use the Telecommunications Devices for the Deaf (TTY) by contacting the Federal Information Relay Service at 1–800–877–8339. (Other than the ''800'' TTY number, telephone numbers are not toll free.)

SUPPLEMENTARY INFORMATION: Section 8 of the United States Housing Act of 1937 (the Act) (42 U.S.C. 1437f) authorizes housing assistance to aid lower income families in renting safe and habitable housing. Housing assistance payments are limited by FMRs established by HUD for different areas. In the voucher program, the FMR is used to determine the ''payment standard'' (the maximum monthly subsidy) for assisted families (see 24 CFR Section 982.503.) In general, the FMR for an area is the amount that would be needed to pay the gross rent (shelter rent plus utilities) of privately owned, decent, safe, and sanitary rental housing of a modest (non-luxury) nature with suitable amenities.

Method Used To Develop FMRs

FMR Standard

FMRs are gross rent estimates; they include shelter rent and the cost of utilities, except telephone. HUD sets FMRs to assure that a sufficient supply of rental housing is available to program participants. To accomplish this objective, FMRs must be both high enough to permit a selection of units and neighborhoods and low enough to serve as many families as possible. The level at which FMRs are set is expressed as a percentile point within the rent distribution of standard quality rental housing units. The current definition used is the 40th percentile rent, the dollar amount below which 40 percent of standard quality rental housing units rent. The 40th percentile rent is drawn from the distribution of rents of units which are occupied by recent movers (renter households who moved into their unit within the past 15 months). Newly built units less than two years old are excluded, and adjustments have been made to correct for the below market rents of public housing units included in the data base.

Data Sources

HUD used the most accurate and current data available to develop the FMR estimates. The sources of survey data used for the base-year estimates are:

(1) The 1990 Census, which provides statistically reliable rent data for all FMR areas;

(2) The Bureau of the Census' American Housing Surveys (AHSs), which are used to develop between-Census revisions for the largest metropolitan areas and which have accuracy comparable to the decennial Census; and

(3) Random Digit Dialing (RDD) telephone surveys of individual FMR areas, which are based on a sampling procedure that uses computers to select statistically random samples of rental housing.

The base-year FMRs are updated using trending factors based on Consumer Price Index (CPI) data for rents and utilities or HUD regional rent change factors developed from RDD surveys. Annual average CPI data are available individually for 99 metropolitan FMR areas. RDD regional rent change factors are developed annually for the metropolitan and nonmetropolitan parts of each of the 10 HUD regions. The RDD factors are used to update the base year estimates for all FMR areas that do not have their own local CPI survey.

State Minimum FMRs

FMRs are established at the higher of the local 40th percentile rent level or the Statewide average of nonmetropolitan counties, subject to a ceiling rent cap. The State minimum also affects a small number of metropolitan areas whose rents would otherwise fall below the State minimum.

Bedroom Size Adjustments

FMRs have been calculated separately for each bedroom size category. For areas whose FMRs are based on the State minimums, the rents for each bedroom size are the higher of the rent for the area or the Statewide average of nonmetropolitan counties for that bedroom size.

For all other FMR areas, the FMRs, including determination of the intervals between the FMRs for bedroom size category, are generally based on data for the specific area. Although intervals are generally based on data for the specific area, exceptions have been made for some areas with local bedroom size rent intervals below an acceptable range. For those areas the intervals used were the minimum bedroom intervals (determined after excluding outliers) from the distribution of bedroom intervals for all metropolitan areas.

Higher intervals continue to be used for three-bedroom and larger size units than would result from using the actual market relationships. This is done to assist the largest, most difficult to house families in finding program-eligible units. The FMRs for unit sizes larger than 4 bedroom are calculated by adding 15 percent to the 4 bedroom FMR for each extra bedroom. For example, the FMR for a 5 bedroom unit is 1.15 times the 4 bedroom FMR, and the FMR for a 6 bedroom unit is 1.30 times the 4 bedroom FMR. FMRs for single-room-occupancy (SRO) units are 0.75 times the 0 bedroom FMR.

Public Comments

In response to the April 28, 2000 proposed FMRs, HUD received public comments covering 33 FMR areas. Rental housing survey information was provided for 22 of those FMR areas. All of the survey information submitted was evaluated. Based on that review, HUD

has revised the proposed FMRs for 16 areas. The information submitted for the other FMR areas was not considered sufficient to provide a basis for revising the FMRs. HUD has increased the proposed FMRs for the following areas.

Bennington County, VT
Brown County, SD
Caledonia County, VT
Clay County, SD
Codington County, SD
Davidson County, SD
Essex County, VT
Franklin County, VT
Grand Isle County, VT
Hughes County, SD
Reno, NV, MSA (Manufactured Home Space FMRs only)
Rutland County, VT
San Jose, CA PMSA
Vallejo-Fairfield-Napa, CA PMSA (Manufactured Home Space FMRs only)
Windham County, VT
Windsor County, VT

RDD Surveys

This notice makes effective the FMRs for 5 areas proposed with reductions based on RDD surveys conducted from January through April, 2000.

Of these five areas, comments were received from:

Lake Charles, LA MSA
Providence-Fall River-Warwick, RI—MA MSA
Springfield, MA MSA

None of the comments received pertaining to these three FMR areas contained sufficient rental housing survey information to provide a basis for revising the FMRs.

No comments were received from the other two areas with proposed decreases:

Brownsville-Harlingen-San Benito, TX MSA
Utica-Rome, NY MSA

Based on RDDs conducted by HUD in summer, 2000, FMRs for the following areas are being increased more than the normal inflation based increase:

Athens County, OH
Burlington, VT MSA
Burnet County, TX
Goldsboro, NC MSA
Jonesboro, AR MSA
Montcalm County, MI
Oakland, CA PMSA
Oklahoma City, OK MSA
Portland, ME MSA
Stamford-Norwalk, CT PMSA
Ventura, CA PMSA

Summer, 2000 RDDs were conducted for the following areas with no change in the FMRs indicated:

Boulder-Longmont, CO PMSA
Harrison County, OH
Los Angeles-Long Beach, CA PMSA
Rocky Mount, NC MSA
Santa Barbara-Santa Maria-Lompoc, CA MSA

A summer, 2000 RDD indicates a decrease of approximately 16 percent in the FMR for the Dutchess County, NY PMSA. This reduction will be proposed for the FY 2002 FMRs.

American Housing Survey

There were no applicable AHS surveys to include in the FY 2001 FMRs.

Calculation Errors

San Diego, CA and Orange County, CA FMRs have been increased by 2 percent and 1.1 percent, respectively, due to corrections of calculation errors in the proposed FMRs.

FMR Area Definition Changes

There were no changes in OMB metropolitan area definitions affecting the FY 2001 FMRs.

Three areas requested changes to their FMR areas: the Public Housing Agency (PHA) for Santa Barbara, CA requested a north/south split in the county, and the Fairfax County, VA and Rockland County, NY PHAs requested that they be removed from their respective FMR areas and made separate FMR areas. HUD does not support splitting FMR areas for these areas. FMR areas are intended to correspond to housing market areas, which HUD defines based on the Office of Management and Budget's metropolitan area definitions. While many FMR areas have large differentials of market rent between the highest and lowest cost parts of an FMR area, current rules for the Section 8 Voucher Program provide that a PHA may establish a separate payment standard for a designated part of an FMR area up to 110 percent of the published standard amounts that exceed this limit. In specified circumstances, with sufficient justification, HUD headquarters may even approve a voucher payment standard amount that exceeds 120 percent of the published FMR—the maximum subsidy limit in the old Section 8 certificate program. These exceptions are sufficient to account for market rent differentials.

Manufactured Home Space Surveys

FMRs for the rental of manufactured home spaces in the Housing Choice Voucher program are 40 percent of the applicable Section 8 existing housing program FMR for a two-bedroom unit. HUD accepts public comments requesting modifications of these FMRs where the 40 percent FMRs are thought to be inadequate. In order to be accepted as a basis for revising the FMRs, comments must contain statistically valid survey data that show the 40th percentile space rent (including the cost of utilities) for the entire FMR area. Manufactured home space FMR revisions are published as final FMRs in Schedule D. Once approved, the revised manufactured home space FMRs establish new base year estimates that are updated annually using the same data used to update the other FMRs.

HUD Rental Housing Survey Guides

HUD recommends the use of professionally-conducted RDD telephone surveys to test the accuracy of FMRs for areas where there is a sufficient number of Section 8 units to justify the survey cost of $10,000–$12,000. Areas with 500 or more program units usually meet this criterion, and areas with fewer units may meet it if local rents are thought to be significantly different than the FMR proposed by HUD. In addition, HUD has developed a simplified version of the RDD survey methodology for smaller, nonmetropolitan PHAs. This methodology is designed to be simple enough to be done by the PHA itself, rather than by professional survey organizations, at a cost of about $5,000.

PHAs in nonmetropolitan areas may, in certain circumstances, do surveys of groups of counties. All grouped county surveys must be approved in advance by HUD. PHAs are cautioned that the resulting FMRs will not be identical for the counties surveyed; each individual FMR area will have a separate FMR based on its relationship to the combined rent of the group of FMR areas.

PHAs that plan to use the RDD survey technique may obtain a copy of the appropriate survey guide by calling HUD USER on 1–800–245–2691. Larger PHAs should request ''Random Digit Dialing Surveys; A Guide to Assist Larger Housing Agencies in Preparing Fair Market Rent Comments.'' Smaller PHAs should obtain ''Rental Housing Surveys; A Guide to Assist Smaller Housing Agencies in Preparing Fair Market Rent Comments.'' These guides are also available on the Internet at http://www.huduser.org/datasets/fmr.html.

HUD prefers, but does not mandate, the use of RDD telephone surveys, or the more traditional method described in the small PHA survey guide. Other survey methodologies are acceptable as long as they provide statistically reliable, unbiased estimates of the 40th percentile gross rent. Survey samples should preferably be randomly drawn

from a complete list of rental units for the FMR area. If this is not feasible, the selected sample must be drawn so as to be statistically representative of the entire rental housing stock of the FMR area. In particular, surveys must include units of all rent levels and be representative by structure type (including single-family, duplex and other small rental properties), age of housing unit, and geographic location. The decennial Census should be used as a starting point and means of verification for determining whether the sample is representative of the FMR area's rental housing stock. All survey results must be fully documented.

The cost of an RDD survey may vary, depending on the characteristics of the telephone system used in the FMR area. RDDs (and simplified telephone surveys) of some non-metropolitan areas have been unusually expensive because of telephone system characteristics. A PHA or contractor that cannot obtain the recommended number of sample responses after reasonable efforts should consult with HUD before abandoning its survey; in such situations HUD is prepared to relax normal sample size requirements.

Other Matters

Environmental Impact

A Finding of No Significant Impact with respect to the environment as required by the National Environmental Policy Act (42 U.S.C. 4321–4374) is unnecessary, since the Section 8 Rental Certificate Program is categorically excluded from the Department's National Environmental Policy Act procedures under 24 CFR 50.20(d).

Regulatory Flexibility Act

The undersigned, in accordance with the Regulatory Flexibility Act (5 U.S.C. 605(b)), hereby certifies that this notice does not have a significant economic impact on a substantial number of small entities, because FMRs do not change the rent from that which would be charged if the unit were not in the Section 8 Program.

Federalism Impact

The General Counsel, as the Designated Official under section 6(a) of Executive Order 13132, Federalism, has determined that this notice will not involve the preemption of State law by Federal statute or regulation and does not have Federalism implications. The Fair Market Rent schedules do not have any substantial direct impact on States, on the relationship between the Federal government and the States, or on the distribution of power and responsibility among the various levels of government.

Catalog of Federal Domestic Assistance

The Catalog of Federal Domestic Assistance program number is 14.156, Lower-Income Housing Assistance Program (Section 8).

Dated: September 15, 2000.

Andrew Cuomo,

Secretary.

Accordingly, the Fair Market Rent Schedules,which will not be codified in 24 CFR Part 888, are amended as follows:

Fair Market Rents for the Housing Choice Voucher Program Schedules B and D—General Explanatory Notes

1. Geographic Coverage

a. *Metropolitan Areas*—FMRs are housing market-wide rent estimates that are intended to provide housing opportunities throughout the geographic area in which rental housing units are in direct competition. The FMRs shown in Schedule B incorporate OMB's most current definitions of metropolitan areas, with the exceptions discussed in paragraph (b). HUD uses the OMB Metropolitan Statistical Area (MSA) and Primary Metropolitan Statistical Area (PMSA) definitions for FMR areas because they closely correspond to housing market area definitions.

b. *Exceptions to OMB Definitions*—The exceptions are counties deleted from several large metropolitan areas whose revised OMB metropolitan area definitions were determined by HUD to be larger than the housing market areas. The FMRs for the following counties (shown by the metropolitan area) are calculated separately and are shown in Schedule B within their respective States under the ''Metropolitan FMR Areas'' listing:

Metropolitan Area and Counties Deleted

Chicago, IL
DeKalb, Grundy and Kendall Counties
Cincinnati-Hamilton, OH–KY–IN
Brown County, Ohio; Gallatin, Grant and Pendleton Counties in Kentucky; and Ohio County, Indiana
Dallas, TX
Henderson County
Flagstaff, AZ–UT
Kane County, UT
New Orleans, LA
St. James Parish
Washington, DC–MD–VA–WV
Berkeley and Jefferson Counties in West Virginia; and Clarke, Culpeper, King George and Warren Counties in Virginia

c. *Nonmetropolitan Area FMRs*—FMRs also are established for nonmetropolitan counties and for county equivalents in the United States, for nonmetropolitan parts of counties in the New England states and for FMR areas in Puerto Rico, the Virgin Islands and the Pacific Islands.

d. *Virginia Independent Cities*—FMRs for the areas in Virginia shown in the table below were established by combining the Census data for the nonmetropolitan counties with the data for the independent cities that are located within the county borders. Because of space limitations, the FMR listing in Schedule B includes only the name of the nonmetropolitan County. The full definitions of these areas, including the independent cities, are as follows:

VIRGINIA NONMETROPOLITAN COUNTY FMR AREA AND INDEPENDENT CITIES INCLUDED WITH COUNTY

County	Cities
Allegheny	Clifton Forge and Covington.
Augusta	Staunton and Waynesboro.
Carroll	Galax.
Frederick	Winchester.
Greensville	Emporia.
Henry	Martinsville.
Montgomery	Radford.
Rockbridge	Buena Vista and Lexington.
Rockingham	Harrisonburg.
Southhampton	Franklin.
Wise	Norton.

2. Bedroom Size Adjustments

Schedule B shows the FMRs for 0-bedroom through 4-bedroom units. The FMRs for unit sizes larger than 4 bedrooms are calculated by adding 15 percent to the 4-bedroom FMR for each extra bedroom. For example, the FMR for a 5-bedroom unit is 1.15 times the 4-bedroom FMR, and the FMR for a 6-bedroom unit is 1.30 times the 4 bedroom FMR. FMRs for single-room-occupancy (SRO) units are 0.75 times the 0 bedroom FMR.

3. FMRs for Manufactured Home Spaces

FMRs for manufactured home spaces in the Housing Choice Voucher program are 40 percent of the two-bedroom Housing Choice Voucher program FMRs, with the exception of the areas listed in Schedule D whose manufactured home space FMRs have been modified on the basis of public comments. Once approved, the revised manufactured home space FMRs establish new base-year estimates that are updated annually using the same data used to estimate the Housing Choice Voucher program FMRs. The FMR area definitions used for the rental of manufactured home spaces are the same as the area definitions used for the other FMRs.

4. Arrangement of FMR Areas and Identification of Constituent Parts

a. The FMR areas in Schedule B are listed alphabetically by metropolitan FMR area and by nonmetropolitan county within each State. The exception FMRs for manufactured home spaces in

Schedule D are listed alphabetically by State.

b. The constituent counties (and New England towns and cities) included in each metropolitan FMR area are listed immediately following the listings of the FMR dollar amounts. All constituent parts of a metropolitan FMR area that are in more than one State can be identified by consulting the listings for each applicable State.

c. Two nonmetropolitan counties are listed alphabetically on each line of the nonmetropolitan county listings.

d. The New England towns and cities included in a nonmetropolitan part of a county are listed immediately following the county name.

BILLING CODE 4210–62–P

SCHEDULE B - 40TH PERCENTILE FAIR MARKET RENTS FOR EXISTING HOUSING

A L A B A M A

METROPOLITAN FMR AREAS	O BR	1 BR	2 BR	3 BR	4 BR	Counties of FMR AREA within STATE
Anniston, AL MSA	263	312	390	544	616	Calhoun
Aurburn-Opelika, Al MSA	262	367	471	612	774	Lee
Birmingham, AL MSA	402	454	528	717	794	Blount, Jefferson, St. Clair, Shelby
Columbus, GA-AL MSA	356	396	475	620	673	Russell
Decatur, AL MSA	350	354	445	577	690	Lawrence, Morgan
Dothan, AL MSA	317	324	403	554	562	Dale, Houston
Florence, AL MSA	297	341	438	547	613	Colbert, Lauderdale
Gadsden, AL MSA	263	322	372	483	594	Etowah
Huntsville, AL MSA	367	430	530	706	841	Limestone, Madison
Mobile, AL MSA	385	430	493	664	779	Baldwin, Mobile
Montgomery, AL MSA	402	429	507	691	832	Autauga, Elmore, Montgomery
Tuscaloosa, AL MSA	347	371	493	678	717	Tuscaloosa

NONMETROPOLITAN COUNTIES	O BR	1 BR	2 BR	3 BR	4 BR
Barbour	247	294	350	454	521
Bullock	247	294	350	454	521
Chambers	247	294	350	454	522
Chilton	256	294	350	454	521
Clarke	247	294	350	454	521
Cleburne	247	294	350	454	521
Conecuh	247	294	350	454	521
Covington	247	294	350	454	521
Cullman	247	294	350	466	566
Dekalb	247	294	350	454	521
Fayette	247	294	350	454	521
Geneva	247	294	350	454	521
Hale	247	294	350	454	521
Jackson	267	294	350	454	557
Lowndes	247	294	350	454	521
Marengo	247	294	350	454	521
Marshall	284	294	358	495	586
Perry	247	294	350	454	521
Pike	296	344	411	533	621
Sumter	247	294	350	454	521
Tallapoosa	248	294	350	454	521
Washington	247	294	350	454	521
Winston	247	294	350	454	521

NONMETROPOLITAN COUNTIES	O BR	1 BR	2 BR	3 BR	4 BR
Bibb	247	294	350	473	567
Butler	247	294	350	454	521
Cherokee	247	294	350	454	521
Choctaw	247	294	350	454	521
Clay	247	294	350	454	521
Coffee	247	347	451	628	705
Coosa	247	294	350	454	521
Crenshaw	247	294	350	454	521
Dallas	247	294	350	454	521
Escambia	247	294	350	454	521
Franklin	247	294	350	454	521
Greene	247	294	350	454	521
Henry	247	294	350	454	521
Lamar	247	294	350	454	521
Macon	270	303	404	506	567
Marion	247	294	350	454	521
Monroe	247	294	350	454	521
Pickens	247	294	350	454	521
Randolph	247	294	350	454	521
Talladega	247	294	350	454	521
Walker	247	305	360	465	591
Wilcox	247	294	350	454	521

Note: The FMRS for unit sizes larger than 4 BRs are calculated by adding 15% to the 4 BR FMR for each extra bedroom. For example, the FMR for a 5 BR unit is 1.15 times the 4BR FMR, and the FMR for a 6 BR unit is 1.30 times the 4 BR FMR. 082900

SCHEDULE B - 40TH PERCENTILE FAIR MARKET RENTS FOR EXISTING HOUSING

A L A S K A

METROPOLITAN FMR AREAS	O BR	1 BR	2 BR	3 BR	4 BR	Counties of FMR AREA within STATE
Anchorage, AK MSA	507	599	794	1105	1304	Anchorage

NONMETROPOLITAN COUNTIES	O BR	1 BR	2 BR	3 BR	4 BR
Aleutian East	525	591	668	833	1091
Bethel	678	848	1074	1345	1505
Dillingham	655	666	886	1108	1241
Haines	489	605	689	937	965
Kenai Peninsula	444	566	682	947	1119
Kodiak Island	698	767	997	1246	1616
Matanuska-Susitna	469	635	714	970	1146
North Slope	784	803	993	1380	1608
Pr.Wales-Outer Ketchikan	366	582	670	929	982
Skagway-Yakutat-Angoon	448	456	590	740	830
Valdez-Cordova	548	672	746	952	1135
Wrangell-Petersburg	399	588	715	911	1001

NONMETROPOLITAN COUNTIES	O BR	1 BR	2 BR	3 BR	4 BR
Aleutian West	450	509	570	715	801
Bristol Bay	544	628	705	981	1067
Fairbanks North Star	413	562	738	1015	1196
Juneau	730	843	1073	1428	1484
Ketchikan Gateway	536	656	878	1222	1286
Lake & Peninsula	419	679	763	952	1069
Nome	690	854	959	1335	1506
Northwest Arctic	830	934	1048	1459	1721
Sitka	577	686	769	1071	1264
Southeast Fairbanks	460	483	582	729	818
Wade Hampton	392	590	666	832	932
Yukon-Koyukuk	523	589	665	831	962

A R I Z O N A

METROPOLITAN FMR AREAS	O BR	1 BR	2 BR	3 BR	4 BR	Counties of FMR AREA within STATE
Flagstaff, AZ	438	474	615	825	991	Coconino
Las Vegas, NV-AZ MSA	508	603	718	999	1180	Mohave
Phoenix-Mesa, AZ MSA	431	523	656	913	1075	Maricopa, Pinal
Tucson, AZ MSA	392	470	625	869	1025	Pima
Yuma, AZ MSA	378	438	583	810	816	Yuma

NONMETROPOLITAN COUNTIES	O BR	1 BR	2 BR	3 BR	4 BR
Apache	365	384	488	637	757
Gila	365	384	488	637	757
Greenlee	365	384	488	637	757
Navajo	365	384	488	637	757
Yavapai	388	404	540	753	829

NONMETROPOLITAN COUNTIES	O BR	1 BR	2 BR	3 BR	4 BR
Cochise	365	384	488	637	757
Graham	365	384	488	637	757
La Paz	365	384	488	637	757
Santa Cruz	365	404	502	637	757

A R K A N S A S

METROPOLITAN FMR AREAS	O BR	1 BR	2 BR	3 BR	4 BR	Counties of FMR AREA within STATE
Fayetteville-Springdale-Rogers, AR MSA	310	390	513	693	717	Benton, Washington
Fort Smith, AR-OK MSA	337	341	449	600	630	Crawford, Sebastian
Jonesboro, AR MSA	365	397	467	644	680	Craighead
Little Rock-North Little Rock, AR MSA	382	424	504	697	814	Faulkner, Lonoke, Pulaski, Saline
Memphis, TN-AR-MS MSA	396	462	542	753	791	Crittenden

Note: The FMRS for unit sizes larger than 4 BRs are calculated by adding 15% to the 4 BR FMR for each extra bedroom. For example, the FMR for a 5 BR unit is 1.15 times the 4BR FMR, and the FMR for a 6 BR unit is 1.30 times the 4 BR FMR.

082900

SCHEDULE B - 40TH PERCENTILE FAIR MARKET RENTS FOR EXISTING HOUSING

A R K A N S A S continued

METROPOLITAN FMR AREAS	O BR	1 BR	2 BR	3 BR	4 BR	Counties of FMR AREA within STATE
Pine Bluff, AR MSA	292	347	456	575	746	Jefferson
Texarkana, TX-Texarkana, AR MSA	311	380	464	612	649	Miller

NONMETROPOLITAN COUNTIES	O BR	1 BR	2 BR	3 BR	4 BR
Arkansas	262	284	364	497	539
Baxter	239	304	404	520	633
Bradley	239	284	364	482	539
Carroll	281	307	364	482	576
Clark	262	284	369	482	582
Cleburne	271	284	364	482	546
Columbia	239	284	364	482	539
Cross	248	314	364	489	577
Desha	239	284	364	482	539
Franklin	250	284	364	482	539
Garland	239	304	407	568	671
Greene	256	284	364	482	539
Hot Spring	239	284	364	482	539
Independence	251	291	364	482	539
Jackson	247	284	364	482	539
Lafayette	250	284	364	482	539
Lee	263	284	364	482	539
Little River	239	284	370	513	605
Madison	273	284	370	482	539
Mississippi	272	295	395	521	584
Montgomery	239	284	364	482	539
Newton	239	284	364	482	539
Perry	239	284	364	482	539
Pike	239	284	364	482	539
Polk	239	284	364	482	539
Prairie	239	284	364	482	539
St. Francis	239	290	364	492	579
Searcy	239	284	364	482	539
Sharp	239	284	364	482	539
Union	299	316	380	510	624
White	239	284	364	498	539
Yell	248	284	364	482	539

NONMETROPOLITAN COUNTIES	O BR	1 BR	2 BR	3 BR	4 BR
Ashley	239	284	364	482	570
Boone	283	288	382	532	628
Calhoun	239	284	364	482	539
Chicot	239	284	364	482	539
Clay	239	284	364	482	539
Cleveland	239	284	364	482	539
Conway	239	295	395	493	553
Dallas	239	284	364	482	539
Drew	239	309	413	571	581
Fulton	247	284	364	482	539
Grant	248	295	364	482	544
Hempstead	239	284	364	482	539
Howard	239	284	364	482	539
Izard	239	284	364	482	539
Johnson	239	284	364	482	539
Lawrence	239	284	364	482	539
Lincoln	258	284	370	494	539
Logan	250	284	364	482	539
Marion	239	284	364	482	539
Monroe	243	284	364	482	539
Nevada	239	284	364	498	539
Ouachita	279	284	364	502	592
Phillips	239	284	364	482	539
Poinsett	239	284	364	482	539
Pope	239	312	395	548	632
Randolph	239	284	364	482	539
Scott	239	284	364	482	539
Sevier	261	284	364	482	539
Stone	239	284	364	482	539
Van Buren	239	284	364	482	595
Woodruff	239	284	364	482	539

Note: The FMRS for unit sizes larger than 4 BRs are calculated by adding 15% to the 4 BR FMR for each extra bedroom. For example, the FMR for a 5 BR unit is 1.15 times the 4BR FMR, and the FMR for a 6 BR unit is 1.30 times the 4 BR FMR. 082900

SCHEDULE B - 40TH PERCENTILE FAIR MARKET RENTS FOR EXISTING HOUSING PAGE 4

C A L I F O R N I A

METROPOLITAN FMR AREAS	O BR	1 BR	2 BR	3 BR	4 BR	Counties of FMR AREA within STATE
Bakersfield, CA MSA	373	419	526	731	809	Kern
Chico-Paradise, CA MSA	341	439	584	800	957	Butte
Fresno, CA MSA	387	433	517	720	830	Fresno, Madera
Los Angeles-Long Beach, CA PMSA	516	618	782	1055	1260	Los Angeles
Merced, CA MSA	407	459	557	770	909	Merced
Modesto, CA MSA	451	485	592	825	972	Stanislaus
Oakland, CA PMSA	718	869	1090	1494	1785	Alameda, Contra Costa
Orange County, CA PMSA	733	800	990	1378	1533	Orange
Redding, CA MSA	387	429	538	747	880	Shasta
Riverside-San Bernardino, CA PMSA	456	508	621	861	1018	Riverside, San Bernardino
Sacramento, CA PMSA	457	515	645	894	1054	El Dorado, Placer, Sacramento
Salinas, CA MSA	548	641	773	1074	1127	Monterey
San Diego, CA MSA	599	684	856	1191	1404	San Diego
San Francisco, CA PMSA	891	1154	1459	2001	2118	Marin, San Francisco, San Mateo
San Jose, CA PMSA	993	1132	1399	1917	2153	Santa Clara
San Luis Obispo-Atascadero-Paso Robles, CA MSA	525	593	752	1045	1234	San Luis Obispo
Santa Barbara-Santa Maria-Lompoc, CA MSA	638	708	897	1250	1411	Santa Barbara
Santa Cruz-Watsonville, CA PMSA	686	817	1091	1517	1777	Santa Cruz
Santa Rosa, CA PMSA	644	730	946	1315	1552	Sonoma
Stockton-Lodi, CA MSA	422	477	613	853	1006	San Joaquin
Vallejo-Fairfield-Napa, CA PMSA	619	703	857	1190	1405	Napa, Solano
Ventura, CA PMSA	634	729	923	1228	1430	Ventura
Visalia-Tulare-Porterville, CA MSA	378	402	524	731	834	Tulare
Yolo, CA PMSA	487	556	688	953	1126	Yolo
Yuba City, CA MSA	336	393	505	704	814	Sutter, Yuba

NONMETROPOLITAN COUNTIES	O BR	1 BR	2 BR	3 BR	4 BR
Alpine	310	465	526	731	787
Calaveras	374	434	577	804	947
Del Norte	317	435	577	805	949
Humboldt	320	443	580	810	958
Inyo	321	434	556	730	787
Lake	349	444	593	747	972
Mariposa	335	426	547	717	845
Modoc	339	379	488	680	787
Nevada	388	531	707	983	1138
San Benito	534	628	786	1095	1281
Siskiyou	325	379	488	680	787
Trinity	348	379	488	680	787

NONMETROPOLITAN COUNTIES	O BR	1 BR	2 BR	3 BR	4 BR
Amador	428	471	629	876	976
Colusa	339	379	488	680	787
Glenn	310	379	488	680	787
Imperial	350	438	539	751	787
Kings	359	418	522	726	854
Lassen	379	384	499	680	787
Mendocino	429	517	634	883	889
Mono	473	567	754	1049	1240
Plumas	342	379	488	680	787
Sierra	310	416	512	711	839
Tehama	324	379	488	680	787
Tuolumne	343	468	624	869	1024

Note: The FMRS for unit sizes larger than 4 BRs are calculated by adding 15% to the 4 BR FMR for each extra bedroom. For example, the FMR for a 5 BR unit is 1.15 times the 4BR FMR, and the FMR for a 6 BR unit is 1.30 times the 4 BR FMR. 082900

SCHEDULE B - 40TH PERCENTILE FAIR MARKET RENTS FOR EXISTING HOUSING PAGE 5

C O L O R A D O

METROPOLITAN FMR AREAS	O BR	1 BR	2 BR	3 BR	4 BR	Counties of FMR AREA within STATE
Boulder-Longmont, CO PMSA	552	661	848	1181	1392	Boulder
Colorado Springs, CO MSA	452	486	647	902	1065	El Paso
Denver, CO PMSA	481	575	765	1062	1254	Adams, Arapahoe, Denver, Douglas, Jefferson
Fort Collins-Loveland, CO MSA	447	552	681	947	1118	Larimer
Grand Junction, CO MSA	411	427	534	720	857	Mesa
Greeley, CO PMSA	462	511	643	892	1055	Weld
Pueblo, CO MSA	433	449	561	755	901	Pueblo

NONMETROPOLITAN COUNTIES	O BR	1 BR	2 BR	3 BR	4 BR
Alamosa	388	403	503	679	809
Baca	388	403	503	679	809
Chaffee	388	403	503	679	809
Clear Creek	388	453	512	713	840
Costilla	388	403	503	679	809
Custer	388	403	503	679	809
Dolores	388	403	503	679	809
Elbert	429	475	544	679	891
Garfield	451	483	610	763	999
Grand	461	465	589	737	893
Hinsdale	388	411	503	679	809
Jackson	388	403	503	679	809
Kit Carson	388	403	503	679	809
La Plata	507	561	739	1030	1215
Lincoln	388	403	503	679	809
Mineral	388	403	503	679	809
Montezuma	388	403	503	679	809
Morgan	388	403	503	679	809
Ouray	388	403	509	679	824
Phillips	388	403	503	679	809
Prowers	388	403	503	679	809
Rio Grande	388	403	503	679	809
Saguache	388	403	503	679	809
San Miguel	714	1032	1134	1416	1828
Summit	500	599	768	1068	1314
Washington	388	403	503	679	809

NONMETROPOLITAN COUNTIES	O BR	1 BR	2 BR	3 BR	4 BR
Archuleta	464	508	601	811	964
Bent	388	403	503	679	809
Cheyenne	388	403	503	679	809
Conejos	388	403	503	679	809
Crowley	388	403	503	679	809
Delta	388	403	503	679	809
Eagle	522	569	759	1056	1245
Fremont	388	403	503	679	809
Gilpin	388	516	656	866	957
Gunnison	388	403	503	679	809
Huerfano	388	403	503	679	809
Kiowa	388	403	503	679	809
Lake	388	403	503	679	809
Las Animas	388	415	503	679	809
Logan	388	403	503	679	809
Moffat	388	403	503	679	809
Montrose	388	403	509	706	832
Otero	388	403	503	679	809
Park	388	430	560	777	884
Pitkin	582	797	1062	1400	1592
Rio Blanco	388	403	503	679	809
Routt	388	469	620	862	1016
San Juan	388	403	503	679	809
Sedgwick	388	403	503	679	809
Teller	388	460	613	852	860
Yuma	388	403	503	679	809

Note: The FMRS for unit sizes larger than 4 BRs are calculated by adding 15% to the 4 BR FMR for each extra bedroom. For example, the FMR for a 5 BR unit is 1.15 times the 4BR FMR, and the FMR for a 6 BR unit is 1.30 times the 4 BR FMR. 082900

SCHEDULE B - 40TH PERCENTILE FAIR MARKET RENTS FOR EXISTING HOUSING PAGE 6

C O N N E C T I C U T

METROPOLITAN FMR AREAS	O BR	1 BR	2 BR	3 BR	4 BR	Components of FMR AREA within STATE
Bridgeport, CT PMSA	476	619	745	932	1162	Fairfield county towns of Bridgeport town, Easton town Fairfield town, Monroe town, Shelton town Stratford town, Trumbull town New Haven county towns of Ansonia town, Beacon Falls town Derby town, Milford town, Oxford town, Seymour town
Danbury, CT PMSA	643	769	961	1268	1462	Fairfield county towns of Bethel town, Brookfield town Danbury town, New Fairfield town, Newtown town Redding town, Ridgefield town, Sherman town Litchfield county towns of Bridgewater town New Milford town, Roxbury town, Washington town
Hartford, CT MSA	443	552	706	886	1075	Hartford county towns of Avon town, Berlin town Bloomfield town, Bristol town, Burlington town Canton town, East Granby town, East Hartford town East Windsor town, Enfield town, Farmington town Glastonbury town, Granby town, Hartford town Manchester town, Marlborough town, New Britain town Newington town, Plainville town, Rocky Hill town Simsbury town, Southington town, South Windsor town Suffield town, West Hartford town, Wethersfield town Windsor town, Windsor Locks town Litchfield county towns of Barkhamsted town Harwinton town, New Hartford town, Plymouth town Winchester town Middlesex county towns of Cromwell town, Durham town East Haddam town, East Hampton town, Haddam town Middlefield town, Middletown town, Portland town New London county towns of Colchester town, Lebanon town Tolland county towns of Andover town, Bolton town Columbia town, Coventry town, Ellington town Hebron town, Mansfield town, Somers town, Stafford town Tolland town, Vernon town, Willington town Windham county towns of Ashford town, Chaplin town Windham town
New Haven-Meriden, CT PMSA	549	674	833	1067	1236	Middlesex county towns of Clinton town, Killingworth town New Haven county towns of Bethany town, Branford town Cheshire town, East Haven town, Guilford town Hamden town, Madison town, Meriden town, New Haven town North Branford tow, North Haven town, Orange town Wallingford town, West Haven town, Woodbridge town
New London-Norwich, CT-RI MSA	501	606	738	923	1055	Middlesex county towns of Old Saybrook town New London county towns of Bozrah town, East Lyme town Franklin town, Griswold town, Groton town, Ledyard town Lisbon town, Montville town, New London town North Stonington t, Norwich town, Old Lyme town Preston town, Salem town, Sprague town, Stonington town Waterford town Windham county towns of Canterbury town, Plainfield town

Note: The FMRS for unit sizes larger than 4 BRs are calculated by adding 15% to the 4 BR FMR for each extra bedroom. For example, the FMR for a 5 BR unit is 1.15 times the 4BR FMR, and the FMR for a 6 BR unit is 1.30 times the 4 BR FMR. 082900

SCHEDULE B - 40TH PERCENTILE FAIR MARKET RENTS FOR EXISTING HOUSING

C O N N E C T I C U T continued

METROPOLITAN FMR AREAS	O BR	1 BR	2 BR	3 BR	4 BR	Components of FMR AREA within STATE
Stamford-Norwalk, CT PMSA	926	1084	1322	1772	1957	Fairfield county towns of Darien town, Greenwich town New Canaan town, Norwalk town, Stamford town Weston town, Westport town, Wilton town
Waterbury, CT PMSA	467	630	781	973	1091	Litchfield county towns of Bethlehem town, Thomaston town Watertown town, Woodbury town New Haven county towns of Middlebury town, Naugatuck town Prospect town, Southbury town, Waterbury town Wolcott town
Worcester, MA-CT PMSA	451	546	681	850	953	Windham county towns of Thompson town

NONMETROPOLITAN COUNTIES	O BR	1 BR	2 BR	3 BR	4 BR	Towns within non metropolitan counties
Hartford	366	593	669	930	1096	Hartland town
Litchfield	426	581	774	966	1100	Canaan town, Colebrook town, Cornwall town, Goshen town Kent town, Litchfield town, Morris town, Norfolk town North Canaan town, Salisbury town, Sharon town Torrington town, Warren town
Middlesex	631	715	955	1329	1567	Chester town, Deep River town, Essex town Westbrook town
New London	535	655	744	960	1218	Lyme town, Voluntown town
Tolland	366	593	669	930	936	Union town
Windham	422	516	669	838	1051	Brooklyn town, Eastford town, Hampton town Killingly town, Pomfret town, Putnam town, Scotland town Sterling town, Woodstock town

D E L A W A R E

METROPOLITAN FMR AREAS	O BR	1 BR	2 BR	3 BR	4 BR	Counties of FMR AREA within STATE
Dover, DE MSA	495	547	624	809	920	Kent
Wilmington-Newark, DE-MD PMSA	457	603	703	954	1153	New Castle

NONMETROPOLITAN COUNTIES	O BR	1 BR	2 BR	3 BR	4 BR
Sussex	432	459	586	770	822

D I S T . O F C O L U M B I A

METROPOLITAN FMR AREAS	O BR	1 BR	2 BR	3 BR	4 BR	Counties of FMR AREA within STATE
Washington, DC-MD-VA	647	735	863	1176	1418	District of Columbia

Note: The FMRS for unit sizes larger than 4 BRs are calculated by adding 15% to the 4 BR FMR for each extra bedroom. For example, the FMR for a 5 BR unit is 1.15 times the 4BR FMR, and the FMR for a 6 BR unit is 1.30 times the 4 BR FMR. 082900

SCHEDULE B - 40TH PERCENTILE FAIR MARKET RENTS FOR EXISTING HOUSING

F L O R I D A

METROPOLITAN FMR AREAS	O BR	1 BR	2 BR	3 BR	4 BR	Counties of FMR AREA within STATE
Daytona Beach, FL MSA	396	464	593	787	836	Flagler, Volusia
Fort Lauderdale, FL PMSA	493	580	718	999	1175	Broward
Fort Myers-Cape Coral, FL MSA	425	490	591	826	861	Lee
Fort Pierce-Port Lucie, FL MSA	473	519	672	874	942	Martin, St. Lucie
Fort Walton Beach, FL MSA	413	451	512	694	818	Okaloosa
Gainesville, FL MSA	413	451	548	751	887	Alachua
Jacksonville, FL MSA	473	530	638	843	938	Clay, Duval, Nassau, St. Johns
Lakeland-Winter Haven, FL MSA	396	433	490	607	663	Polk
Melbourne-Titusville-Palm Bay, FL MSA	396	463	579	775	903	Brevard
Miami, FL PMSA	461	579	722	991	1149	Dade
Naples, FL MSA	441	622	749	1041	1160	Collier
Ocala, FL MSA	413	451	512	672	788	Marion
Orlando, FL MSA	513	582	694	911	1112	Lake, Orange, Osceola, Seminole
Panama City, FL MSA	413	451	512	653	700	Bay
Pensacola, FL MSA	413	451	512	684	806	Escambia, Santa Rosa
Punta Gorda, FL MSA	413	474	631	875	1032	Charlotte
Sarasota-Bradenton, FL MSA	414	526	669	860	936	Manatee, Sarasota
Tallahassee, FL MSA	422	468	616	805	970	Gadsden, Leon
Tampa-St. Petersburg-Clearwater, FL MSA	440	524	649	862	1045	Hernando, Hillsborough, Pasco, Pinellas
West Palm Beach-Boca Raton, FL MSA	506	591	731	971	1202	Palm Beach

NONMETROPOLITAN COUNTIES	O BR	1 BR	2 BR	3 BR	4 BR
Baker	389	425	481	597	648
Calhoun	389	425	481	597	648
Columbia	389	425	481	597	648
Dixie	389	425	481	597	648
Gilchrist	389	425	481	597	648
Gulf	389	425	481	597	648
Hardee	389	425	481	597	648
Highlands	389	425	481	599	669
Indian River	389	486	625	782	875
Jefferson	389	425	481	597	648
Levy	389	425	481	597	648
Madison	389	425	481	597	648
Okeechobee	389	425	481	597	654
Sumter	389	425	481	597	648
Taylor	389	425	481	597	649
Wakulla	389	425	481	597	648
Washington	389	425	481	597	648

NONMETROPOLITAN COUNTIES	O BR	1 BR	2 BR	3 BR	4 BR
Bradford	389	425	481	597	648
Citrus	389	425	481	597	648
Desoto	389	425	481	597	648
Franklin	389	425	481	597	648
Glades	389	425	481	597	648
Hamilton	389	425	481	597	648
Hendry	389	425	495	621	696
Holmes	389	425	481	597	648
Jackson	389	425	481	597	648
Lafayette	389	425	481	597	648
Liberty	389	425	481	597	648
Monroe	556	628	807	1112	1323
Putnam	389	425	481	597	648
Suwannee	389	425	481	597	648
Union	389	425	481	597	648
Walton	389	425	481	619	774

Note: The FMRS for unit sizes larger than 4 BRs are calculated by adding 15% to the 4 BR FMR for each extra bedroom. For example, the FMR for a 5 BR unit is 1.15 times the 4BR FMR, and the FMR for a 6 BR unit is 1.30 times the 4 BR FMR.

082900

SCHEDULE B - 40TH PERCENTILE FAIR MARKET RENTS FOR EXISTING HOUSING

G E O R G I A

METROPOLITAN FMR AREAS	O BR	1 BR	2 BR	3 BR	4 BR	Counties of FMR AREA within STATE
Albany, GA MSA	308	361	440	601	651	Dougherty, Lee
Athens, GA MSA	379	409	529	722	870	Clarke, Madison, Oconee
Atlanta, GA MSA	613	682	795	1060	1282	Barrow, Bartow, Carroll, Cherokee, Clayton, Cobb, Coweta Dekalb, Douglas, Fayette, Forsyth, Fulton, Gwinnett Henry, Newton, Paulding, Pickens, Rockdale, Spalding Walton
Augusta-Aiken, GA-SC MSA	389	465	548	744	880	Columbia, Mcduffie, Richmond
Chattanooga, TN-GA MSA	372	434	522	674	768	Catoosa, Dade, Walker
Columbus, GA-AL MSA	356	396	475	620	673	Chattahoochee, Harris, Muscogee
Macon, GA MSA	398	443	516	711	731	Bibb, Houston, Jones, Peach, Twiggs
Savannah, GA MSA	371	461	536	723	752	Bryan, Chatham, Effingham

NONMETROPOLITAN COUNTIES	O BR	1 BR	2 BR	3 BR	4 BR	NONMETROPOLITAN COUNTIES	O BR	1 BR	2 BR	3 BR	4 BR
Appling	283	340	416	539	613	Atkinson	283	340	416	539	613
Bacon	283	340	416	539	613	Baker	283	340	416	539	613
Baldwin	283	362	441	565	617	Banks	283	340	416	539	613
Ben Hill	283	340	416	539	621	Berrien	283	340	416	539	613
Bleckley	283	340	416	539	613	Brantley	283	340	416	539	613
Brooks	283	340	416	539	613	Bulloch	340	345	444	572	726
Burke	283	340	416	539	613	Butts	283	374	496	664	696
Calhoun	283	340	416	539	613	Camden	395	447	500	696	822
Candler	283	340	416	539	613	Charlton	283	340	416	539	613
Chattooga	283	340	416	539	613	Clay	283	340	416	539	613
Clinch	283	340	416	539	613	Coffee	283	340	416	539	621
Colquitt	283	340	416	539	613	Cook	283	340	416	539	613
Crawford	283	340	416	539	613	Crisp	286	340	416	539	613
Dawson	283	368	489	612	754	Decatur	283	340	416	539	613
Dodge	283	340	416	539	613	Dooly	283	340	416	539	613
Early	283	340	416	539	613	Echols	283	340	416	539	613
Elbert	283	340	416	539	613	Emanuel	283	340	416	539	613
Evans	283	340	416	539	613	Fannin	283	340	416	539	613
Floyd	283	340	417	550	613	Franklin	283	340	416	539	613
Gilmer	283	340	416	539	613	Glascock	283	340	416	539	613
Glynn	394	441	499	670	821	Gordon	335	340	424	547	699
Grady	288	340	416	539	613	Greene	283	340	416	539	613
Habersham	303	340	416	539	618	Hall	299	454	534	669	746
Hancock	283	340	416	539	613	Haralson	283	340	416	539	613
Hart	283	340	416	539	613	Heard	283	340	416	539	613
Irwin	283	340	416	539	613	Jackson	314	340	427	539	703
Jasper	283	340	421	572	613	Jeff Davis	283	340	416	539	613
Jefferson	283	340	416	539	621	Jenkins	283	340	416	539	613

Note: The FMRS for unit sizes larger than 4 BRs are calculated by adding 15% to the 4 BR FMR for each extra bedroom. For example, the FMR for a 5 BR unit is 1.15 times the 4BR FMR, and the FMR for a 6 BR unit is 1.30 times the 4 BR FMR. 082900

SCHEDULE B - 40TH PERCENTILE FAIR MARKET RENTS FOR EXISTING HOUSING PAGE 10

G E O R G I A continued

NONMETROPOLITAN COUNTIES	O BR	1 BR	2 BR	3 BR	4 BR
Johnson	283	340	416	539	613
Lanier	283	340	416	539	613
Liberty	351	392	446	620	625
Long	283	368	416	539	613
Lumpkin	283	381	428	573	703
Macon	283	340	416	539	613
Meriwether	283	340	416	539	613
Mitchell	283	340	416	539	613
Montgomery	283	340	416	539	613
Murray	283	340	416	539	613
Pierce	283	340	416	539	613
Polk	283	340	416	563	613
Putnam	283	340	416	539	621
Rabun	283	340	416	539	613
Schley	283	340	416	539	613
Seminole	283	340	416	539	613
Stewart	283	340	416	539	613
Talbot	283	340	416	539	613
Tattnall	283	340	416	539	613
Telfair	283	340	416	539	613
Thomas	283	350	416	539	613
Toombs	283	340	416	539	613
Treutlen	283	340	416	539	613
Turner	283	340	416	539	613
Upson	292	340	416	539	613
Warren	283	340	416	539	613
Wayne	292	340	416	539	613
Wheeler	283	340	416	539	613
Whitfield	283	371	446	570	672
Wilkes	283	340	416	539	613
Worth	283	340	416	539	613

NONMETROPOLITAN COUNTIES	O BR	1 BR	2 BR	3 BR	4 BR
Lamar	283	349	416	539	659
Laurens	289	340	416	539	613
Lincoln	283	340	416	539	613
Lowndes	316	383	463	649	718
Mcintosh	283	340	416	539	613
Marion	283	340	416	539	613
Miller	283	340	416	539	613
Monroe	283	340	416	548	613
Morgan	283	340	431	539	613
Oglethorpe	283	340	416	539	613
Pike	328	355	450	627	631
Pulaski	283	340	416	539	613
Quitman	283	340	416	539	613
Randolph	283	340	416	539	613
Screven	283	340	416	539	613
Stephens	283	340	416	539	613
Sumter	283	345	416	539	613
Taliaferro	283	340	416	539	613
Taylor	283	340	416	539	613
Terrell	283	340	416	539	613
Tift	283	340	416	539	613
Towns	283	340	416	539	613
Troup	283	385	433	541	613
Union	283	340	434	544	613
Ware	312	350	416	539	647
Washington	283	340	416	539	613
Webster	283	340	416	539	613
White	283	340	416	539	627
Wilcox	283	340	416	539	613
Wilkinson	283	340	416	539	613

H A W A I I

METROPOLITAN FMR AREAS	O BR	1 BR	2 BR	3 BR	4 BR	Counties of FMR AREA within STATE
Honolulu, HI MSA	595	713	839	1134	1226	Honolulu

Note: The FMRS for unit sizes larger than 4 BRs are calculated by adding 15% to the 4 BR FMR for each extra bedroom. For example, the FMR for a 5 BR unit is 1.15 times the 4BR FMR, and the FMR for a 6 BR unit is 1.30 times the 4 BR FMR. 082900

SCHEDULE B - 40TH PERCENTILE FAIR MARKET RENTS FOR EXISTING HOUSING

H A W A I I continued

NONMETROPOLITAN COUNTIES	O BR	1 BR	2 BR	3 BR	4 BR
Hawaii	463	604	695	923	1137
Maui	748	928	1132	1462	1656
Kauai	591	884	1076	1424	1540

I D A H O

METROPOLITAN FMR AREAS	O BR	1 BR	2 BR	3 BR	4 BR	Counties of FMR AREA within STATE
Boise City, ID MSA	396	451	548	761	900	Ada, Canyon
Pocatello, ID MSA	284	329	423	576	681	Bannock

NONMETROPOLITAN COUNTIES	O BR	1 BR	2 BR	3 BR	4 BR
Adams	282	327	421	558	661
Benewah	282	327	421	558	661
Blaine	436	480	639	891	1049
Bonner	324	401	497	688	792
Boundary	282	327	421	558	661
Camas	282	327	421	558	661
Cassia	282	327	421	558	661
Clearwater	282	327	421	558	661
Elmore	282	327	421	558	661
Fremont	282	327	421	558	661
Gooding	282	327	421	558	661
Jefferson	290	327	421	558	661
Kootenai	358	421	551	767	907
Lemhi	282	327	421	558	661
Lincoln	282	327	421	558	661
Minidoka	282	327	421	558	661
Oneida	283	327	421	558	661
Payette	282	327	421	558	661
Shoshone	282	327	421	558	661
Twin Falls	282	327	426	562	661
Washington	282	327	421	558	661
Bear Lake	282	327	421	558	661
Bingham	300	327	421	558	661
Boise	282	363	421	558	661
Bonneville	287	361	497	668	815
Butte	282	327	421	558	661
Caribou	282	327	421	558	661
Clark	282	327	421	558	661
Custer	282	327	421	558	661
Franklin	282	327	421	558	661
Gem	282	327	421	558	661
Idaho	282	327	421	558	661
Jerome	282	327	421	558	661
Latah	282	327	421	558	670
Lewis	282	327	421	558	661
Madison	282	327	421	558	661
Nez Perce	287	327	421	558	661
Owyhee	282	327	421	558	661
Power	282	327	421	558	661
Teton	307	327	421	570	675
Valley	293	327	421	558	661

I L L I N O I S

METROPOLITAN FMR AREAS	O BR	1 BR	2 BR	3 BR	4 BR	Counties of FMR AREA within STATE
Bloomington-Normal, IL MSA	346	422	565	785	829	Mclean
Champaign-Urbana, IL MSA	381	467	605	830	994	Champaign
Chicago, IL	551	661	788	985	1102	Cook, Dupage, Kane, Lake, Mchenry, Will
Davenport-Moline-Rock Island, IA-IL MSA	286	395	489	632	685	Henry, Rock Island

Note: The FMRS for unit sizes larger than 4 BRs are calculated by adding 15% to the 4 BR FMR for each extra bedroom. For example, the FMR for a 5 BR unit is 1.15 times the 4BR FMR, and the FMR for a 6 BR unit is 1.30 times the 4 BR FMR.

082900

SCHEDULE B - 40TH PERCENTILE FAIR MARKET RENTS FOR EXISTING HOUSING

I L L I N O I S continued

METROPOLITAN FMR AREAS	O BR	1 BR	2 BR	3 BR	4 BR	Counties of FMR AREA within STATE
Decatur, IL MSA	276	357	459	620	642	Macon
De Kalb County, IL	454	528	669	930	1077	Dekalb
Grundy County, IL	394	456	605	799	850	Grundy
Kankakee, IL PMSA	358	433	576	737	809	Kankakee
Kendall County, Il	548	624	752	1047	1053	Kendall
Peoria-Pekin, IL MSA	384	423	567	755	927	Peoria, Tazewell, Woodford
Rockford, IL MSA	368	471	574	721	841	Boone, Ogle, Winnebago
St. Louis, MO-IL MSA	329	400	519	676	747	Clinton, Jersey, Madison, Monroe, St. Clair
Springfield, IL MSA	317	393	524	697	793	Menard, Sangamon

NONMETROPOLITAN COUNTIES	O BR	1 BR	2 BR	3 BR	4 BR
Adams	263	295	380	499	606
Bond	263	295	380	499	560
Bureau	263	332	389	499	560
Carroll	263	295	380	499	560
Christian	283	295	382	501	560
Clay	263	295	380	499	560
Crawford	263	295	380	499	560
De Witt	267	295	380	503	560
Edgar	263	295	380	499	560
Effingham	263	304	380	499	560
Ford	250	352	457	587	641
Fulton	271	303	391	513	577
Greene	263	295	380	499	560
Hancock	263	295	380	499	560
Henderson	263	295	380	499	560
Jackson	319	320	405	574	642
Jefferson	264	310	387	528	560
Johnson	263	295	380	499	560
La Salle	319	374	499	674	756
Lee	293	301	404	504	566
Logan	294	313	417	522	654
Macoupin	263	295	380	499	560
Marshall	263	295	380	499	560
Massac	264	295	380	499	560
Montgomery	263	295	380	499	560
Moultrie	263	295	380	512	560
Piatt	263	320	416	567	583
Pope	263	295	380	499	560
Putnam	263	295	380	499	560

NONMETROPOLITAN COUNTIES	O BR	1 BR	2 BR	3 BR	4 BR
Alexander	263	295	380	499	560
Brown	263	295	380	499	560
Calhoun	263	295	380	499	560
Cass	264	295	380	499	560
Clark	263	295	380	499	560
Coles	278	331	440	585	691
Cumberland	263	295	380	499	560
Douglas	281	295	380	499	560
Edwards	263	295	380	499	560
Fayette	263	295	380	499	560
Franklin	263	295	380	499	560
Gallatin	263	295	380	499	560
Hamilton	263	296	380	499	560
Hardin	263	295	380	499	560
Iroquois	263	295	380	499	560
Jasper	263	297	380	499	560
Jo Daviess	291	315	380	499	560
Knox	263	295	380	499	579
Lawrence	263	295	380	499	560
Livingston	263	324	433	558	609
Mcdonough	263	300	380	499	600
Marion	268	295	380	499	560
Mason	263	295	380	499	567
Mercer	263	295	380	499	560
Morgan	263	334	443	591	622
Perry	264	295	380	499	560
Pike	263	295	380	499	560
Pulaski	263	295	380	499	560
Randolph	263	295	380	499	560

Note: The FMRS for unit sizes larger than 4 BRs are calculated by adding 15% to the 4 BR FMR for each extra bedroom. For example, the FMR for a 5 BR unit is 1.15 times the 4BR FMR, and the FMR for a 6 BR unit is 1.30 times the 4 BR FMR.

082900

SCHEDULE B - 40TH PERCENTILE FAIR MARKET RENTS FOR EXISTING HOUSING

I L L I N O I S continued

NONMETROPOLITAN COUNTIES	0 BR	1 BR	2 BR	3 BR	4 BR
Richland	263	295	380	499	560
Schuyler	263	295	380	499	560
Shelby	263	295	380	499	560
Stephenson	278	318	403	503	564
Vermilion	263	336	419	524	587
Warren	278	295	380	499	560
Wayne	263	295	380	499	560
Whiteside	278	316	421	527	594

NONMETROPOLITAN COUNTIES	0 BR	1 BR	2 BR	3 BR	4 BR
Saline	263	295	380	499	560
Scott	263	295	380	499	560
Stark	263	295	380	499	560
Union	263	295	380	499	560
Wabash	263	295	380	499	592
Washington	263	315	420	526	683
White	263	295	380	499	560
Williamson	263	295	382	531	560

I N D I A N A

METROPOLITAN FMR AREAS	0 BR	1 BR	2 BR	3 BR	4 BR	Counties of FMR AREA within STATE
Bloomington, IN MSA	376	486	647	900	1063	Monroe
Cincinnati, OH-KY-IN	324	416	557	746	806	Dearborn
Elkhart-Goshen, IN MSA	380	433	547	700	804	Elkhart
Evansville-Henderson, IN-KY MSA	325	387	503	628	703	Posey, Vanderburgh, Warrick
Fort Wayne, IN MSA	325	414	515	664	720	Adams, Allen, De Kalb, Huntington, Wells, Whitley
Gary, IN PMSA	400	526	656	824	920	Lake, Porter
Indianapolis, IN MSA	371	465	559	700	785	Boone, Hamilton, Hancock, Hendricks, Johnson, Madison Marion, Morgan, Shelby
Kokomo, IN MSA	350	413	539	693	755	Howard, Tipton
Lafayette, IN MSA	354	450	599	833	984	Clinton, Tippecanoe
Louisville, KY-IN MSA	323	415	510	703	741	Clark, Floyd, Harrison, Scott
Muncie, IN MSA	302	376	446	604	713	Delaware
Ohio County, IN	301	338	433	558	614	Ohio
South Bend, IN MSA	326	434	570	712	799	St. Joseph
Terre Haute, IN MSA	294	344	439	547	611	Clay, Vermillion, Vigo

NONMETROPOLITAN COUNTIES	0 BR	1 BR	2 BR	3 BR	4 BR
Bartholomew	404	434	524	654	861
Blackford	284	320	422	528	592
Carroll	284	320	410	527	580
Crawford	284	320	410	527	580
Decatur	284	347	443	574	624
Fayette	300	339	433	557	655
Franklin	284	320	410	527	648
Gibson	284	320	410	527	580
Greene	284	320	410	527	580
Jackson	349	365	451	597	641
Jay	284	320	410	527	580

NONMETROPOLITAN COUNTIES	0 BR	1 BR	2 BR	3 BR	4 BR
Benton	284	320	410	527	580
Brown	284	377	497	690	714
Cass	284	320	410	527	580
Daviess	284	320	410	527	580
Dubois	284	320	410	527	598
Fountain	284	320	410	527	580
Fulton	313	328	410	551	580
Grant	299	320	410	529	580
Henry	312	351	449	579	635
Jasper	284	345	410	527	580
Jefferson	284	320	410	527	580

Note: The FMRS for unit sizes larger than 4 BRs are calculated by adding 15% to the 4 BR FMR for each extra bedroom. For example, the FMR for a 5 BR unit is 1.15 times the 4BR FMR, and the FMR for a 6 BR unit is 1.30 times the 4 BR FMR.

082900

SCHEDULE B - 40TH PERCENTILE FAIR MARKET RENTS FOR EXISTING HOUSING

I N D I A N A continued

NONMETROPOLITAN COUNTIES	O BR	1 BR	2 BR	3 BR	4 BR
Jennings	296	320	410	527	580
Kosciusko	284	376	454	589	636
La Porte	289	350	468	600	655
Marshall	337	342	454	571	636
Miami	284	320	410	527	580
Newton	296	320	410	527	580
Orange	284	320	410	527	580
Parke	284	320	410	527	606
Pike	284	320	410	527	580
Putnam	309	360	442	594	599
Ripley	284	320	410	535	607
Spencer	284	320	410	527	580
Steuben	348	392	469	587	655
Switzerland	284	320	410	527	580
Wabash	284	320	410	527	580
Washington	284	320	410	527	580
White	284	320	410	527	640

NONMETROPOLITAN COUNTIES	O BR	1 BR	2 BR	3 BR	4 BR
Knox	289	320	415	527	581
Lagrange	289	334	425	553	643
Lawrence	284	320	410	531	580
Martin	284	320	410	527	580
Montgomery	409	430	536	681	753
Noble	328	335	416	536	594
Owen	284	320	410	527	607
Perry	284	320	410	527	580
Pulaski	284	320	410	527	580
Randolph	284	320	410	527	580
Rush	292	320	410	527	607
Starke	284	320	410	527	580
Sullivan	284	320	410	527	580
Union	284	320	410	527	580
Warren	284	320	410	527	580
Wayne	343	385	494	635	698

I O W A

METROPOLITAN FMR AREAS	O BR	1 BR	2 BR	3 BR	4 BR	Counties of FMR AREA within STATE
Cedar Rapids, IA MSA	279	394	507	705	757	Linn
Davenport-Moline-Rock Island, IA-IL MSA	286	395	489	632	685	Scott
Des Moines, IA MSA	363	458	565	733	770	Dallas, Polk, Warren
Dubuque, IA MSA	297	363	466	596	727	Dubuque
Iowa City, IA MSA	351	452	582	807	954	Johnson
Omaha, NE-IA MSA	343	469	593	777	872	Pottawattamie
Sioux City, IA-NE MSA	349	419	522	651	744	Woodbury
Waterloo-Cedar Falls, IA MSA	326	418	522	695	817	Black Hawk

NONMETROPOLITAN COUNTIES	O BR	1 BR	2 BR	3 BR	4 BR
Adair	267	330	414	526	580
Allamakee	267	330	414	532	609
Audubon	267	330	414	526	580
Boone	267	351	414	532	630
Buchanan	281	330	414	526	580
Butler	284	330	414	526	580
Carroll	267	330	414	526	580
Cedar	267	335	414	526	580
Cherokee	267	330	414	526	580

NONMETROPOLITAN COUNTIES	O BR	1 BR	2 BR	3 BR	4 BR
Adams	267	330	414	526	580
Appanoose	267	330	414	526	584
Benton	274	330	414	526	580
Bremer	267	330	414	526	617
Buena Vista	282	330	414	526	580
Calhoun	267	330	414	526	580
Cass	267	330	414	526	580
Cerro Gordo	267	350	433	577	606
Chickasaw	267	330	414	526	580

Note: The FMRS for unit sizes larger than 4 BRs are calculated by adding 15% to the 4 BR FMR for each extra bedroom. For example, the FMR for a 5 BR unit is 1.15 times the 4BR FMR, and the FMR for a 6 BR unit is 1.30 times the 4 BR FMR.

082900

SCHEDULE B - 40TH PERCENTILE FAIR MARKET RENTS FOR EXISTING HOUSING

I O W A continued

NONMETROPOLITAN COUNTIES	O BR	1 BR	2 BR	3 BR	4 BR
Clarke	274	330	414	526	580
Clayton	267	330	414	526	580
Crawford	267	330	414	526	580
Decatur	267	330	414	526	580
Des Moines	267	341	438	549	613
Emmet	267	330	414	526	613
Floyd	290	330	414	526	580
Fremont	293	330	414	526	611
Grundy	267	330	414	526	596
Hamilton	305	346	419	526	587
Hardin	267	330	414	526	580
Henry	267	339	430	538	609
Humboldt	267	330	414	526	580
Iowa	267	330	414	526	580
Jasper	267	339	429	536	601
Jones	276	330	414	526	580
Kossuth	267	330	414	526	580
Louisa	267	330	414	526	580
Lyon	267	330	414	526	580
Mahaska	267	330	414	526	580
Marshall	294	364	456	579	640
Mitchell	267	330	414	526	580
Monroe	267	348	414	526	611
Muscatine	305	378	501	667	700
Osceola	267	330	414	526	580
Palo Alto	267	330	414	526	580
Pocahontas	267	330	414	526	580
Ringgold	267	330	414	526	580
Shelby	267	330	414	526	580
Story	348	422	499	689	790
Taylor	267	330	414	526	581
Van Buren	267	330	414	526	580
Washington	267	330	414	526	611
Webster	267	330	420	529	589
Winneshiek	267	330	414	526	580
Wright	267	330	414	526	580

NONMETROPOLITAN COUNTIES	O BR	1 BR	2 BR	3 BR	4 BR
Clay	267	330	414	526	580
Clinton	267	330	420	526	588
Davis	267	330	414	526	580
Delaware	267	330	414	526	580
Dickinson	267	330	414	526	580
Fayette	267	330	414	526	580
Franklin	274	330	414	526	580
Greene	267	330	414	526	580
Guthrie	267	330	414	526	610
Hancock	267	330	414	526	580
Harrison	267	330	414	526	580
Howard	267	330	414	526	606
Ida	274	330	414	526	580
Jackson	267	330	417	526	584
Jefferson	267	338	449	585	739
Keokuk	267	330	414	526	580
Lee	267	330	427	535	600
Lucas	267	330	414	526	580
Madison	267	330	431	552	605
Marion	267	367	449	562	630
Mills	267	357	421	529	590
Monona	267	330	414	526	580
Montgomery	293	332	414	526	580
O'Brien	267	330	414	526	580
Page	267	330	414	526	580
Plymouth	267	330	433	541	606
Poweshiek	282	351	449	562	630
Sac	267	330	414	526	580
Sioux	267	330	414	526	580
Tama	267	330	414	526	580
Union	267	330	414	526	611
Wapello	267	330	418	526	585
Wayne	267	330	414	526	580
Winnebago	267	336	414	526	580
Worth	267	330	414	526	589

Note: The FMRS for unit sizes larger than 4 BRs are calculated by adding 15% to the 4 BR FMR for each extra bedroom. For example, the FMR for a 5 BR unit is 1.15 times the 4BR FMR, and the FMR for a 6 BR unit is 1.30 times the 4 BR FMR. 082900

SCHEDULE B - 40TH PERCENTILE FAIR MARKET RENTS FOR EXISTING HOUSING

K A N S A S

METROPOLITAN FMR AREAS	O BR	1 BR	2 BR	3 BR	4 BR	Counties of FMR AREA within STATE
Kansas City, MO-KS MSA	394	496	597	826	915	Johnson, Leavenworth, Miami, Wyandotte
Lawrence, KS MSA	361	432	554	771	888	Douglas
Topeka, KS MSA	338	389	507	685	772	Shawnee
Wichita, KS MSA	332	399	534	722	780	Butler, Harvey, Sedgwick

NONMETROPOLITAN COUNTIES	O BR	1 BR	2 BR	3 BR	4 BR
Allen	272	309	396	511	568
Atchison	272	309	396	511	609
Barton	272	309	396	511	568
Brown	272	309	396	511	568
Chautauqua	272	309	396	511	568
Cheyenne	272	309	396	511	568
Clay	272	309	396	511	568
Coffey	281	309	396	511	593
Cowley	290	309	396	523	568
Decatur	272	309	396	511	568
Doniphan	272	309	396	511	568
Elk	272	309	396	511	568
Ellsworth	272	309	396	511	568
Ford	313	370	460	580	653
Geary	335	352	440	568	616
Graham	272	309	396	511	568
Gray	272	309	396	511	568
Greenwood	272	309	396	511	568
Harper	272	309	396	511	568
Hodgeman	272	309	396	511	568
Jefferson	272	309	403	535	568
Kearny	303	309	407	548	602
Kiowa	272	309	396	511	568
Lane	272	309	396	511	568
Linn	272	309	396	511	568
Lyon	272	309	396	511	606
Marion	272	309	396	511	568
Meade	272	309	396	511	568
Montgomery	272	309	396	511	568
Morton	272	332	396	511	568
Neosho	272	309	396	511	568
Norton	272	309	396	511	568
Osborne	272	309	396	511	569
Pawnee	272	309	396	511	568

NONMETROPOLITAN COUNTIES	O BR	1 BR	2 BR	3 BR	4 BR
Anderson	272	309	396	511	568
Barber	272	309	396	511	568
Bourbon	272	309	396	511	568
Chase	272	309	396	511	568
Cherokee	272	309	396	511	568
Clark	272	309	396	511	568
Cloud	272	309	396	511	568
Comanche	272	309	396	511	568
Crawford	272	309	403	511	568
Dickinson	272	309	396	511	568
Edwards	272	309	396	511	568
Ellis	272	309	396	511	568
Finney	357	381	488	636	804
Franklin	306	321	414	530	646
Gove	272	309	396	511	568
Grant	282	358	410	561	612
Greeley	272	309	396	511	568
Hamilton	272	309	396	511	568
Haskell	272	316	396	511	568
Jackson	272	309	396	511	568
Jewell	272	309	396	511	568
Kingman	272	309	396	511	568
Labette	272	309	396	511	568
Lincoln	272	309	396	511	568
Logan	272	309	396	511	568
Mcpherson	274	309	396	511	568
Marshall	272	309	396	511	568
Mitchell	272	309	396	511	568
Morris	272	309	396	511	568
Nemaha	272	309	396	511	568
Ness	272	309	396	511	568
Osage	272	309	396	511	568
Ottawa	272	309	396	511	568
Phillips	272	309	396	511	568

Note: The FMRS for unit sizes larger than 4 BRs are calculated by adding 15% to the 4 BR FMR for each extra bedroom. For example, the FMR for a 5 BR unit is 1.15 times the 4BR FMR, and the FMR for a 6 BR unit is 1.30 times the 4 BR FMR. 082900

SCHEDULE B - 40TH PERCENTILE FAIR MARKET RENTS FOR EXISTING HOUSING

K A N S A S continued

NONMETROPOLITAN COUNTIES	O BR	1 BR	2 BR	3 BR	4 BR
Pottawatomie	272	309	396	511	581
Rawlins	272	309	396	511	568
Republic	272	309	396	511	568
Riley	338	372	495	618	751
Rush	272	309	396	511	568
Saline	356	368	485	670	678
Seward	328	358	476	596	665
Sherman	272	309	396	511	568
Stafford	272	309	396	511	568
Stevens	272	310	396	511	584
Thomas	272	309	396	511	568
Wabaunsee	272	309	396	511	568
Washington	272	309	396	511	568
Wilson	272	309	396	511	568

NONMETROPOLITAN COUNTIES	O BR	1 BR	2 BR	3 BR	4 BR
Pratt	272	309	396	521	568
Reno	272	309	396	511	617
Rice	272	309	396	511	568
Rooks	272	309	396	511	568
Russell	272	309	396	511	568
Scott	272	309	396	521	599
Sheridan	272	309	396	511	568
Smith	272	309	396	511	568
Stanton	272	309	396	511	568
Sumner	272	309	396	535	568
Trego	272	309	396	511	568
Wallace	272	309	396	511	568
Wichita	272	309	407	511	634
Woodson	272	309	396	511	568

K E N T U C K Y

METROPOLITAN FMR AREAS	O BR	1 BR	2 BR	3 BR	4 BR	Counties of FMR AREA within STATE
Cincinnati, OH-KY-IN	324	416	557	746	806	Boone, Campbell, Kenton
Clarksville-Hopkinsville, TN-KY MSA	345	386	454	618	636	Christian
Evansville-Henderson, IN-KY MSA	325	387	503	628	703	Henderson
Gallatin County, KY	271	369	452	567	740	Gallatin
Grant County, KY	270	321	425	593	702	Grant
Huntington-Ashland, WV-KY-OH MSA	307	360	444	566	624	Boyd, Carter, Greenup
Lexington, KY MSA	350	435	533	727	821	Bourbon, Clark, Fayette, Jessamine, Madison, Scott Woodford
Louisville, KY-IN MSA	323	415	510	703	741	Bullitt, Jefferson, Oldham
Owensboro, KY MSA	305	316	415	557	583	Daviess
Pendleton County, KY	272	315	419	527	589	Pendleton

NONMETROPOLITAN COUNTIES	O BR	1 BR	2 BR	3 BR	4 BR
Adair	251	307	363	480	527
Anderson	277	293	380	474	532
Barren	251	304	363	469	527
Bell	251	293	366	469	527
Bracken	251	293	363	469	527
Breckinridge	251	293	363	469	527
Caldwell	251	293	363	469	527
Carlisle	251	293	363	469	527
Casey	251	293	363	469	527
Clinton	251	293	363	469	527

NONMETROPOLITAN COUNTIES	O BR	1 BR	2 BR	3 BR	4 BR
Allen	251	293	363	469	527
Ballard	251	293	363	469	527
Bath	251	293	363	469	527
Boyle	299	303	404	506	567
Breathitt	251	293	363	469	527
Butler	251	293	363	469	527
Calloway	251	293	363	469	527
Carroll	251	293	363	469	527
Clay	251	293	363	469	527
Crittenden	251	293	363	469	527

Note: The FMRS for unit sizes larger than 4 BRs are calculated by adding 15% to the 4 BR FMR for each extra bedroom. For example, the FMR for a 5 BR unit is 1.15 times the 4BR FMR, and the FMR for a 6 BR unit is 1.30 times the 4 BR FMR. 082900

SCHEDULE B - 40TH PERCENTILE FAIR MARKET RENTS FOR EXISTING HOUSING PAGE 18

K E N T U C K Y continued

NONMETROPOLITAN COUNTIES	O BR	1 BR	2 BR	3 BR	4 BR
Cumberland	251	293	363	469	527
Elliott	251	293	363	469	527
Fleming	251	293	363	469	527
Franklin	251	370	453	585	739
Garrard	251	293	363	469	527
Grayson	251	293	363	469	527
Hancock	251	293	363	473	560
Harlan	251	382	435	568	670
Hart	251	293	363	469	527
Hickman	251	293	363	469	527
Jackson	251	293	363	469	527
Knott	251	293	363	469	527
Larue	251	293	363	469	527
Lawrence	251	293	363	469	527
Leslie	251	293	363	469	527
Lewis	251	293	363	469	527
Livingston	290	293	391	543	547
Lyon	251	293	363	469	527
Mccreary	251	293	363	469	527
Magoffin	251	293	363	469	527
Marshall	251	299	363	469	564
Mason	251	293	363	469	527
Menifee	251	293	363	469	527
Metcalfe	251	293	363	469	527
Montgomery	251	293	363	469	527
Muhlenberg	251	293	363	469	527
Nicholas	251	293	363	469	527
Owen	251	293	363	469	540
Perry	282	293	378	472	529
Powell	251	293	363	469	527
Robertson	251	293	363	469	527
Rowan	251	293	363	469	547
Shelby	252	332	372	519	527
Spencer	251	299	363	469	527
Todd	251	293	363	469	527
Trimble	251	293	363	469	527
Warren	251	325	434	542	627
Wayne	251	293	363	469	527
Whitley	251	293	363	469	527

NONMETROPOLITAN COUNTIES	O BR	1 BR	2 BR	3 BR	4 BR
Edmonson	251	293	363	469	527
Estill	251	293	363	469	527
Floyd	265	322	363	503	578
Fulton	251	293	363	469	527
Graves	251	293	363	469	527
Green	251	293	363	469	527
Hardin	312	321	401	540	640
Harrison	251	294	372	469	574
Henry	251	293	363	469	527
Hopkins	251	293	363	469	532
Johnson	251	293	363	469	527
Knox	251	347	445	557	685
Laurel	328	371	440	593	615
Lee	251	293	363	469	527
Letcher	251	293	363	469	527
Lincoln	251	293	363	469	527
Logan	251	293	363	478	527
Mccracken	285	306	383	490	629
Mclean	251	293	363	469	527
Marion	251	293	363	469	527
Martin	251	293	363	469	527
Meade	260	323	372	491	612
Mercer	251	293	363	478	527
Monroe	251	293	363	469	527
Morgan	251	293	363	469	527
Nelson	276	293	374	469	527
Ohio	251	293	363	469	527
Owsley	251	293	363	469	527
Pike	270	308	374	469	553
Pulaski	276	293	372	470	527
Rockcastle	251	293	363	469	527
Russell	251	293	363	469	527
Simpson	251	314	368	470	527
Taylor	303	359	401	537	607
Trigg	251	293	363	469	527
Union	251	293	363	469	527
Washington	251	297	363	469	527
Webster	251	293	363	469	527
Wolfe	251	293	363	469	527

Note: The FMRS for unit sizes larger than 4 BRs are calculated by adding 15% to the 4 BR FMR for each extra bedroom. For example, the FMR for a 5 BR unit is 1.15 times the 4BR FMR, and the FMR for a 6 BR unit is 1.30 times the 4 BR FMR. 082900

SCHEDULE B - 40TH PERCENTILE FAIR MARKET RENTS FOR EXISTING HOUSING

L O U I S I A N A

METROPOLITAN FMR AREAS	0 BR	1 BR	2 BR	3 BR	4 BR	Counties of FMR AREA within STATE
Alexandria, LA MSA	283	354	444	615	625	Rapides
Baton Rouge, LA MSA	307	381	473	656	775	Ascension, East Baton Rouge, Livingston, West Baton Rouge
Houma, LA MSA	279	327	419	581	688	Lafourche, Terrebonne
Lafayette, LA MSA	296	341	405	558	660	Lafayette, Acadia, St. Landry, St. Martin
Lake Charles, LA MSA	326	379	480	629	788	Calcasieu
Monroe, LA MSA	306	343	457	616	640	Ouachita
New Orleans, LA	369	423	527	717	868	Jefferson, Orleans, Plaquemines, St. Bernard, St. Charles St. John the Baptist, St. Tammany
St. James Parish, LA	278	315	420	523	586	St. James
Shreveport-Bossier City, LA MSA	345	392	492	658	808	Bossier, Caddo, Webster

NONMETROPOLITAN COUNTIES	0 BR	1 BR	2 BR	3 BR	4 BR
Allen	270	293	361	473	527
Avoyelles	270	293	361	473	529
Bienville	270	293	361	479	566
Cameron	270	293	361	473	527
Claiborne	270	293	361	473	527
De Soto	270	293	361	473	531
East Feliciana	270	293	361	473	527
Franklin	270	293	361	473	531
Iberia	285	297	369	473	527
Jackson	270	293	361	473	527
La Salle	270	293	361	473	531
Madison	270	293	361	473	527
Natchitoches	288	295	381	528	531
Red River	270	293	361	473	531
Sabine	270	300	361	473	556
St. Mary	295	316	397	541	564
Tensas	270	293	361	473	527
Vermilion	270	293	361	473	527
Washington	270	293	361	473	527
West Feliciana	270	351	470	587	659

NONMETROPOLITAN COUNTIES	0 BR	1 BR	2 BR	3 BR	4 BR
Assumption	295	317	376	473	527
Beauregard	328	358	424	554	610
Caldwell	270	293	361	473	527
Catahoula	270	293	361	473	527
Concordia	270	293	361	473	527
East Carroll	270	293	361	473	527
Evangeline	270	293	361	473	527
Grant	270	293	361	473	527
Iberville	270	293	361	473	543
Jefferson Davis	270	293	361	473	535
Lincoln	317	319	398	546	655
Morehouse	270	293	361	473	527
Pointe Coupee	270	293	361	473	572
Richland	270	293	361	473	531
St. Helena	270	293	361	473	527
Tangipahoa	289	300	386	506	539
Union	270	293	361	473	531
Vernon	309	345	393	509	601
West Carroll	270	293	361	473	527
Winn	270	293	361	473	527

M A I N E

METROPOLITAN FMR AREAS	0 BR	1 BR	2 BR	3 BR	4 BR	Components of FMR AREA within STATE
Bangor, ME MSA	354	432	554	724	777	Penobscot county towns of Bangor city, Brewer city Eddington town, Glenburn town, Hampden town, Hermon town Holden town, Kenduskeag town, Milford town Old Town city, Orono town, Orrington town Penobscot Indian I, Veazie town

Note: The FMRS for unit sizes larger than 4 BRs are calculated by adding 15% to the 4 BR FMR for each extra bedroom. For example, the FMR for a 5 BR unit is 1.15 times the 4BR FMR, and the FMR for a 6 BR unit is 1.30 times the 4 BR FMR. 082900

SCHEDULE B - 40TH PERCENTILE FAIR MARKET RENTS FOR EXISTING HOUSING PAGE 20

M A I N E continued

METROPOLITAN FMR AREAS	O BR	1 BR	2 BR	3 BR	4 BR	Components of FMR AREA within STATE
						Waldo county towns of Winterport town
Lewiston-Auburn, ME MSA	326	393	505	633	718	Androscoggin county towns of Auburn city, Greene town Lewiston city, Lisbon town, Mechanic Falls tow Poland town, Sabattus town, Turner town, Wales town
Portland, ME MSA	442	569	749	937	1050	Cumberland county towns of Cape Elizabeth tow, Casco town Cumberland town, Falmouth town, Freeport town Gorham town, Gray town, North Yarmouth tow Portland city, Raymond town, Scarborough town South Portland cit, Standish town, Westbrook city Windham town, Yarmouth town York county towns of Buxton town, Hollis town Limington town, Old Orchard Beach
Portsmouth-Rochester, NH-ME PMSA	497	595	765	981	1203	York county towns of Berwick town, Eliot town Kittery town, South Berwick town, York town

NONMETROPOLITAN COUNTIES	O BR	1 BR	2 BR	3 BR	4 BR	Towns within non metropolitan counties
Androscoggin	325	402	533	666	746	Durham town, Leeds town, Livermore town Livermore Falls to, Minot town
Aroostook	325	382	489	622	716	
Cumberland	476	485	646	878	1008	Baldwin town, Bridgton town, Brunswick town Harpswell town, Harrison town, Naples town New Gloucester tow, Pownal town, Sebago town
Franklin	332	382	489	622	716	
Hancock	350	429	531	669	743	
Kennebec	338	422	507	637	716	
Knox	325	419	543	725	763	
Lincoln	423	471	535	744	878	
Oxford	325	382	489	622	716	
Penobscot	325	382	489	622	716	Alton town, Argyle unorg., Bradford town, Bradley town Burlington town, Carmel town, Carroll plantation Charleston town, Chester town, Clifton town Corinna town, Corinth town, Dexter town, Dixmont town Drew plantation, East Central Penob, East Millinocket t Edinburg town, Enfield town, Etna town, Exeter town Garland town, Greenbush town, Greenfield town Howland town, Hudson town, Kingman unorg., Lagrange town Lakeville town, Lee town, Levant town, Lincoln town Lowell town, Mattawamkeag town, Maxfield town Medway town, Millinocket town, Mount Chase town Newburgh town, Newport town, North Penobscot un Passadumkeag town, Patten town, Plymouth town Prentiss plantatio, Seboeis plantation, Springfield town Stacyville town, Stetson town, Twombly unorg. Webster plantation, Whitney unorg., Winn town Woodville town

Note: The FMRS for unit sizes larger than 4 BRs are calculated by adding 15% to the 4 BR FMR for each extra bedroom. For example, the FMR for a 5 BR unit is 1.15 times the 4BR FMR, and the FMR for a 6 BR unit is 1.30 times the 4 BR FMR. 082900

SCHEDULE B - 40TH PERCENTILE FAIR MARKET RENTS FOR EXISTING HOUSING PAGE 21

M A I N E continued

NONMETROPOLITAN COUNTIES	O BR	1 BR	2 BR	3 BR	4 BR	Towns within non metropolitan counties
Piscataquis	325	382	489	622	716	
Sagadahoc	457	523	646	859	1061	
Somerset	340	389	489	622	735	
Waldo	325	382	489	622	716	Belfast city, Belmont town, Brooks town, Burnham town Frankfort town, Freedom town, Islesboro town Jackson town, Knox town, Liberty town, Lincolnville town Monroe town, Montville town, Morrill town Northport town, Palermo town, Prospect town Searsmont town, Searsport town, Stockton Springs t Swanville town, Thorndike town, Troy town, Unity town Waldo town
Washington	325	382	489	622	716	
York	402	459	615	770	861	Acton town, Alfred town, Arundel town, Biddeford city Cornish town, Dayton town, Kennebunk town Kennebunkport town, Lebanon town, Limerick town Lyman town, Newfield town, North Berwick town Ogunquit town, Parsonsfield town, Saco city Sanford town, Shapleigh town, Waterboro town, Wells town

M A R Y L A N D

METROPOLITAN FMR AREAS	O BR	1 BR	2 BR	3 BR	4 BR	Counties of FMR AREA within STATE
Baltimore, MD	443	542	661	875	1001	Anne Arundel, Baltimore, Carroll, Harford, Howard Queen Anne's, Baltimore city
Columbia, MD	575	773	901	1190	1487	Columbia
Cumberland, MD-WV MSA	340	409	506	668	763	Allegany
Hagerstown, MD PMSA	348	418	522	683	780	Washington
Washington, DC-MD-VA	647	735	863	1176	1418	Calvert, Charles, Frederick, Montgomery, Prince George's
Wilmington-Newark, DE-MD PMSA	457	603	703	954	1153	Cecil

NONMETROPOLITAN COUNTIES	O BR	1 BR	2 BR	3 BR	4 BR
Caroline	372	401	501	657	746
Garrett	332	445	501	653	823
St. Mary's	507	602	694	968	1106
Talbot	439	465	620	777	1018
Worcester	332	401	502	697	746
Dorchester	332	429	501	653	746
Kent	336	414	553	690	832
Somerset	396	444	501	695	822
Wicomico	374	432	558	708	781

M A S S A C H U S E T T S

METROPOLITAN FMR AREAS	O BR	1 BR	2 BR	3 BR	4 BR	Components of FMR AREA within STATE
Barnstable-Yarmouth, MA MSA	501	671	896	1122	1256	Barnstable county towns of Barnstable town, Brewster town Chatham town, Dennis town, Eastham town, Harwich town Mashpee town, Orleans town, Sandwich town, Yarmouth town

Note: The FMRS for unit sizes larger than 4 BRs are calculated by adding 15% to the 4 BR FMR for each extra bedroom. For example, the FMR for a 5 BR unit is 1.15 times the 4BR FMR, and the FMR for a 6 BR unit is 1.30 times the 4 BR FMR. 082900

SCHEDULE B - 40TH PERCENTILE FAIR MARKET RENTS FOR EXISTING HOUSING PAGE 22

M A S S A C H U S E T T S continued

METROPOLITAN FMR AREAS	O BR	1 BR	2 BR	3 BR	4 BR	Components of FMR AREA within STATE
Boston, MA-NH PMSA	695	782	979	1223	1437	Bristol county towns of Berkley town, Dighton town Mansfield town, Norton town, Taunton city Essex county towns of Amesbury town, Beverly city Danvers town, Essex town, Gloucester city, Hamilton town Ipswich town, Lynn city, Lynnfield town, Manchester town Marblehead town, Middleton town, Nahant town Newbury town, Newburyport city, Peabody city Rockport town, Rowley town, Salem city, Salisbury town Saugus town, Swampscott town, Topsfield town Wenham town Middlesex county towns of Acton town, Arlington town Ashland town, Ayer town, Bedford town, Belmont town Boxborough town, Burlington town, Cambridge city Carlisle town, Concord town, Everett city Framingham town, Holliston town, Hopkinton town Hudson town, Lexington town, Lincoln town Littleton town, Malden city, Marlborough city Maynard town, Medford city, Melrose city, Natick town Newton city, North Reading town, Reading town Sherborn town, Shirley town, Somerville city Stoneham town, Stow town, Sudbury town, Townsend town Wakefield town, Waltham city, Watertown town Wayland town, Weston town, Wilmington town Winchester town, Woburn city Norfolk county towns of Bellingham town, Braintree town Brookline town, Canton town, Cohasset town, Dedham town Dover town, Foxborough town, Franklin town Holbrook town, Medfield town, Medway town, Millis town Milton town, Needham town, Norfolk town, Norwood town Plainville town, Quincy city, Randolph town, Sharon town Stoughton town, Walpole town, Wellesley town Westwood town, Weymouth town, Wrentham town Plymouth county towns of Carver town, Duxbury town Hanover town, Hingham town, Hull town, Kingston town Marshfield town, Norwell town, Pembroke town Plymouth town, Rockland town, Scituate town Wareham town Suffolk county towns of Boston city, Chelsea city Revere city, Winthrop town Worcester county towns of Berlin town, Blackstone town Bolton town, Harvard town, Hopedale town, Lancaster town Mendon town, Milford town, Millville town Southborough town, Upton town
Brockton, MA PMSA	464	611	750	932	1063	Bristol county towns of Easton town, Raynham town Norfolk county towns of Avon town Plymouth county towns of Abington town, Bridgewater town Brockton city, East Bridgewater t, Halifax town

Note: The FMRS for unit sizes larger than 4 BRs are calculated by adding 15% to the 4 BR FMR for each extra bedroom. For example, the FMR for a 5 BR unit is 1.15 times the 4BR FMR, and the FMR for a 6 BR unit is 1.30 times the 4 BR FMR. 082900

SCHEDULE B - 40TH PERCENTILE FAIR MARKET RENTS FOR EXISTING HOUSING PAGE 23

M A S S A C H U S E T T S continued

METROPOLITAN FMR AREAS	O BR	1 BR	2 BR	3 BR	4 BR	Components of FMR AREA within STATE
						Hanson town, Lakeville town, Middleborough town Plympton town, West Bridgewater t, Whitman town
Fitchburg-Leominster, MA MSA.....	363	510	662	851	925	Middlesex county towns of Ashby town Worcester county towns of Ashburnham town, Fitchburg city Gardner city, Leominster city, Lunenburg town Templeton town, Westminster town, Winchendon town
Lawrence, MA-NH PMSA.....	502	606	763	953	1172	Essex county towns of Andover town, Boxford town Georgetown town, Groveland town, Haverhill city Lawrence city, Merrimac town, Methuen town North Andover town, West Newbury town
Lowell, MA-NH PMSA.....	510	659	796	997	1115	Middlesex county towns of Billerica town, Chelmsford town Dracut town, Dunstable town, Groton town, Lowell city Pepperell town, Tewksbury town, Tyngsborough town Westford town
New Bedford, MA PMSA.....	487	595	677	846	950	Bristol county towns of Acushnet town, Dartmouth town Fairhaven town, Freetown town, New Bedford city Plymouth county towns of Marion town, Mattapoisett town Rochester town
Pittsfield, MA MSA.....	327	464	571	717	888	Berkshire county towns of Adams town, Cheshire town Dalton town, Hinsdale town, Lanesborough town, Lee town Lenox town, Pittsfield city, Richmond town Stockbridge town
Providence-Fall River-Warwick, RI-MA MSA.....	384	523	628	789	972	Bristol county towns of Attleboro city, Fall River city North Attleborough, Rehoboth town, Seekonk town Somerset town, Swansea town, Westport town
Springfield, MA MSA.....	407	503	635	793	976	Franklin county towns of Sunderland town Hampden county towns of Agawam town, Chicopee city East Longmeadow to, Hampden town, Holyoke city Longmeadow town, Ludlow town, Monson town Montgomery town, Palmer town, Russell town Southwick town, Springfield city, Westfield city West Springfield t, Wilbraham town Hampshire county towns of Amherst town, Belchertown town Easthampton town, Granby town, Hadley town Hatfield town, Huntington town, Northampton city Southampton town, South Hadley town, Ware town Williamsburg town
Worcester, MA-CT PMSA.....	451	546	681	850	953	Hampden county towns of Holland town Worcester county towns of Auburn town, Barre town Boylston town, Brookfield town, Charlton town Clinton town, Douglas town, Dudley town East Brookfield to, Grafton town, Holden town Leicester town, Millbury town, Northborough town Northbridge town, North Brookfield t, Oakham town Oxford town, Paxton town, Princeton town, Rutland town Shrewsbury town, Southbridge town, Spencer town Sterling town, Sturbridge town, Sutton town

Note: The FMRS for unit sizes larger than 4 BRs are calculated by adding 15% to the 4 BR FMR for each extra bedroom. For example, the FMR for a 5 BR unit is 1.15 times the 4BR FMR, and the FMR for a 6 BR unit is 1.30 times the 4 BR FMR. 082900

SCHEDULE B - 40TH PERCENTILE FAIR MARKET RENTS FOR EXISTING HOUSING PAGE 24

M A S S A C H U S E T T S continued

METROPOLITAN FMR AREAS	O BR	1 BR	2 BR	3 BR	4 BR	Components of FMR AREA within STATE
						Uxbridge town, Webster town, Westborough town West Boylston town, West Brookfield to, Worcester city

NONMETROPOLITAN COUNTIES	O BR	1 BR	2 BR	3 BR	4 BR	Towns within non metropolitan counties
Barnstable	484	664	884	1106	1239	Bourne town, Falmouth town, Provincetown town Truro town, Wellfleet town
Berkshire	386	469	553	758	908	Alford town, Becket town, Clarksburg town, Egremont town Florida town, Great Barrington t, Hancock town Monterey town, Mount Washington t, New Ashford town New Marlborough to, North Adams city, Otis town Peru town, Sandisfield town, Savoy town, Sheffield town Tyringham town, Washington town, West Stockbridge t Williamstown town, Windsor town
Dukes	654	665	885	1107	1242	
Franklin	416	515	659	826	997	Ashfield town, Bernardston town, Buckland town Charlemont town, Colrain town, Conway town Deerfield town, Erving town, Gill town, Greenfield town Hawley town, Heath town, Leverett town, Leyden town Monroe town, Montague town, New Salem town Northfield town, Orange town, Rowe town, Shelburne town Shutesbury town, Warwick town, Wendell town Whately town
Hampden	420	572	763	1015	1252	Blandford town, Brimfield town, Chester town Granville town, Tolland town, Wales town
Hampshire	588	595	794	996	1114	Chesterfield town, Cummington town, Goshen town Middlefield town, Pelham town, Plainfield town Westhampton town, Worthington town
Nantucket	743	996	1328	1660	1858	
Worcester	468	488	650	814	910	Athol town, Hardwick town, Hubbardston town New Braintree town, Petersham town, Phillipston town Royalston town, Warren town

M I C H I G A N

METROPOLITAN FMR AREAS	O BR	1 BR	2 BR	3 BR	4 BR	Counties of FMR AREA within STATE
Ann Arbor, MI PMSA	493	596	736	965	1082	Lenawee, Livingston, Washtenaw
Benton Harbor, MI MSA	385	389	511	638	716	Berrien
Detroit, MI PMSA	406	551	666	833	933	Lapeer, Macomb, Monroe, Oakland, St. Clair, Wayne
Flint, MI PMSA	384	436	547	698	765	Genesee
Grand Rapids-Muskegon-Holland, MI MSA	402	470	574	719	805	Allegan, Kent, Muskegon, Ottawa
Jackson, MI MSA	303	407	516	644	722	Jackson
Kalamazoo-Battle Creek, MI MSA	358	432	544	682	761	Calhoun, Kalamazoo, Van Buren
Lansing-East Lansing, MI MSA	403	474	613	801	925	Clinton, Eaton, Ingham

Note: The FMRS for unit sizes larger than 4 BRs are calculated by adding 15% to the 4 BR FMR for each extra bedroom. For example, the FMR for a 5 BR unit is 1.15 times the 4BR FMR, and the FMR for a 6 BR unit is 1.30 times the 4 BR FMR. 082900

SCHEDULE B - 40TH PERCENTILE FAIR MARKET RENTS FOR EXISTING HOUSING

M I C H I G A N continued

METROPOLITAN FMR AREAS	O BR	1 BR	2 BR	3 BR	4 BR	Counties of FMR AREA within STATE
Saginaw-Bay City-Midland, MI MSA	352	388	516	644	722	Bay, Midland, Saginaw

NONMETROPOLITAN COUNTIES	O BR	1 BR	2 BR	3 BR	4 BR
Alcona	293	335	424	551	628
Alpena	293	335	424	551	632
Arenac	293	335	424	551	628
Barry	293	362	481	604	676
Branch	340	348	427	584	628
Charlevoix	357	361	457	621	643
Chippewa	293	335	424	551	628
Crawford	321	335	433	592	628
Dickinson	293	361	445	556	628
Gladwin	293	335	424	551	628
Grand Traverse	388	416	555	694	779
Hillsdale	293	335	424	551	628
Huron	293	335	424	551	628
Iosco	293	335	424	551	665
Isabella	328	350	468	632	768
Keweenaw	293	335	424	551	628
Leelanau	398	430	503	657	825
Mackinac	293	335	424	551	628
Marquette	293	335	424	551	628
Mecosta	293	335	424	574	681
Missaukee	309	335	424	551	628
Montmorency	293	335	424	551	628
Oceana	313	335	424	551	628
Ontonagon	293	335	424	551	628
Oscoda	293	335	424	551	628
Presque Isle	293	335	424	551	628
St. Joseph	293	342	424	553	628
Schoolcraft	293	335	424	551	628
Tuscola	319	348	464	580	648

NONMETROPOLITAN COUNTIES	O BR	1 BR	2 BR	3 BR	4 BR
Alger	293	335	424	551	628
Antrim	293	352	424	551	628
Baraga	293	335	424	551	628
Benzie	306	335	424	569	628
Cass	293	335	426	582	628
Cheboygan	309	335	424	551	644
Clare	304	335	424	551	628
Delta	293	335	424	551	628
Emmet	328	392	464	609	648
Gogebic	293	335	424	551	628
Gratiot	306	335	424	551	628
Houghton	293	335	424	551	628
Ionia	360	364	456	568	639
Iron	293	335	424	551	628
Kalkaska	293	335	425	553	699
Lake	296	335	424	551	628
Luce	293	335	424	551	628
Manistee	293	335	424	551	628
Mason	293	335	424	551	628
Menominee	293	335	424	551	628
Montcalm	351	396	501	651	742
Newaygo	338	362	425	551	628
Ogemaw	305	336	424	551	628
Osceola	293	335	424	551	628
Otsego	300	364	459	638	739
Roscommon	324	335	424	551	628
Sanilac	293	345	424	553	628
Shiawassee	293	368	443	617	661
Wexford	293	339	439	576	681

M I N N E S O T A

METROPOLITAN FMR AREAS	O BR	1 BR	2 BR	3 BR	4 BR	Counties of FMR AREA within STATE
Duluth-Superior, MN-WI MSA	285	367	471	629	733	St. Louis
Fargo-Moorhead, ND-MN MSA	344	473	571	793	849	Clay
Grand Forks, ND-MN MSA	355	423	557	768	857	Polk

Note: The FMRS for unit sizes larger than 4 BRs are calculated by adding 15% to the 4 BR FMR for each extra bedroom. For example, the FMR for a 5 BR unit is 1.15 times the 4BR FMR, and the FMR for a 6 BR unit is 1.30 times the 4 BR FMR.

082900

SCHEDULE B - 40TH PERCENTILE FAIR MARKET RENTS FOR EXISTING HOUSING PAGE 26

M I N N E S O T A continued

METROPOLITAN FMR AREAS	O BR	1 BR	2 BR	3 BR	4 BR	Counties of FMR AREA within STATE
La Crosse, WI-MN MSA	289	372	473	633	767	Houston
Minneapolis-St. Paul, MN-WI MSA	427	549	702	950	1076	Anoka, Carver, Chisago, Dakota, Hennepin, Isanti, Ramsey Scott, Sherburne, Washington, Wright
Rochester, MN MSA	332	466	610	843	947	Olmsted
St. Cloud, MN MSA	330	427	505	637	813	Benton, Stearns

NONMETROPOLITAN COUNTIES	O BR	1 BR	2 BR	3 BR	4 BR
Aitkin	273	354	471	591	659
Beltrami	269	345	461	604	645
Blue Earth	367	443	552	707	897
Carlton	269	328	416	521	596
Chippewa	269	328	416	521	596
Cook	319	328	428	585	609
Crow Wing	269	328	437	547	687
Douglas	269	328	416	521	596
Fillmore	269	328	416	521	596
Goodhue	311	400	533	680	746
Hubbard	275	328	416	521	596
Jackson	269	328	416	521	596
Kandiyohi	332	419	510	639	770
Koochiching	326	332	441	551	722
Lake	269	328	416	521	596
Le Sueur	269	328	416	521	642
Lyon	269	328	416	521	617
Mahnomen	269	328	416	521	596
Martin	269	328	416	521	596
Mille Lacs	286	328	417	581	684
Mower	269	328	416	521	596
Nicollet	338	361	480	637	674
Norman	269	328	416	521	596
Pennington	269	328	416	556	596
Pipestone	269	328	416	521	596
Red Lake	269	340	416	521	596
Renville	269	328	416	521	596
Rock	269	328	416	521	596
Sibley	269	328	416	521	596
Stevens	306	387	437	547	613
Todd	269	328	416	521	596
Wabasha	291	355	449	563	643
Waseca	351	385	489	613	701

NONMETROPOLITAN COUNTIES	O BR	1 BR	2 BR	3 BR	4 BR
Becker	269	386	434	543	609
Big Stone	269	328	416	521	596
Brown	269	348	416	521	596
Cass	269	328	416	521	596
Clearwater	269	328	416	521	596
Cottonwood	269	328	416	521	596
Dodge	269	328	416	521	596
Faribault	269	328	416	521	596
Freeborn	269	328	424	558	598
Grant	269	328	416	521	596
Itasca	345	349	455	568	637
Kanabec	269	339	439	549	615
Kittson	269	328	416	521	596
Lac qui Parle	269	328	416	521	596
Lake of the Woods	269	328	416	521	596
Lincoln	269	328	416	521	596
Mcleod	320	412	549	682	766
Marshall	269	328	416	521	596
Meeker	321	377	478	601	686
Morrison	298	328	416	521	596
Murray	269	328	416	521	596
Nobles	269	328	416	521	596
Otter Tail	269	328	416	521	596
Pine	297	328	416	524	596
Pope	269	328	416	521	596
Redwood	269	328	416	521	596
Rice	319	436	582	725	812
Roseau	326	332	435	561	611
Steele	319	370	493	616	690
Swift	269	328	416	521	596
Traverse	269	328	416	521	596
Wadena	269	328	416	521	596
Watonwan	269	328	416	521	596

Note: The FMRS for unit sizes larger than 4 BRs are calculated by adding 15% to the 4 BR FMR for each extra bedroom. For example, the FMR for a 5 BR unit is 1.15 times the 4BR FMR, and the FMR for a 6 BR unit is 1.30 times the 4 BR FMR. 082900

SCHEDULE B - 40TH PERCENTILE FAIR MARKET RENTS FOR EXISTING HOUSING

M I N N E S O T A continued

NONMETROPOLITAN COUNTIES	O BR	1 BR	2 BR	3 BR	4 BR
Wilkin	269	328	416	521	596
Yellow Medicine	269	328	416	521	596
Winona	314	409	518	647	725

M I S S I S S I P P I

METROPOLITAN FMR AREAS	O BR	1 BR	2 BR	3 BR	4 BR	Counties of FMR AREA within STATE
Biloxi-Gulfport-Pascagpula, MS MSA	401	470	541	754	889	Hancock, Harrison, Jackson
Hattiesburg, MS MSA	285	349	428	574	684	Forrest, Lamar
Jackson, MS MSA	399	455	557	740	781	Hinds, Madison, Rankin
Memphis, TN-AR-MS MSA	396	462	542	753	791	Desoto

NONMETROPOLITAN COUNTIES	O BR	1 BR	2 BR	3 BR	4 BR
Adams	250	297	370	473	603
Amite	250	297	368	473	532
Benton	250	297	368	473	532
Calhoun	250	297	368	473	532
Chickasaw	250	297	368	473	532
Claiborne	250	297	368	473	532
Clay	250	297	368	473	537
Copiah	250	297	368	473	532
Franklin	253	297	368	473	532
Greene	250	297	368	473	532
Holmes	250	297	368	473	532
Issaquena	263	362	480	601	673
Jasper	250	297	368	473	532
Jefferson Davis	250	297	368	473	532
Kemper	252	297	368	473	532
Lauderdale	250	323	406	527	570
Leake	250	297	368	473	532
Leflore	250	297	368	474	569
Lowndes	309	333	395	495	558
Marshall	250	297	368	473	540
Montgomery	250	297	368	473	532
Newton	250	297	368	473	532
Oktibbeha	307	320	391	543	641
Pearl River	263	297	368	475	532
Pike	254	297	368	473	532
Prentiss	253	297	368	473	532
Scott	250	297	368	473	532
Simpson	253	297	368	473	532
Alcorn	250	297	368	473	532
Attala	250	297	368	473	532
Bolivar	285	297	383	478	546
Carroll	250	297	368	473	532
Choctaw	250	297	368	473	532
Clarke	250	297	368	473	532
Coahoma	291	297	392	492	550
Covington	250	297	368	473	532
George	250	297	368	473	532
Grenada	250	298	368	502	532
Humphreys	250	297	368	473	532
Itawamba	250	297	368	473	532
Jefferson	250	297	368	473	532
Jones	250	297	368	473	532
Lafayette	253	347	463	580	648
Lawrence	250	297	368	473	532
Lee	313	337	406	508	570
Lincoln	250	297	368	473	532
Marion	250	297	368	473	532
Monroe	250	297	368	473	532
Neshoba	250	297	368	473	532
Noxubee	254	297	368	473	532
Panola	259	297	368	473	532
Perry	250	297	368	473	532
Pontotoc	250	297	368	473	532
Quitman	250	297	368	473	532
Sharkey	254	297	368	473	532
Smith	250	297	368	473	532

Note: The FMRS for unit sizes larger than 4 BRs are calculated by adding 15% to the 4 BR FMR for each extra bedroom. For example, the FMR for a 5 BR unit is 1.15 times the 4BR FMR, and the FMR for a 6 BR unit is 1.30 times the 4 BR FMR. 082900

SCHEDULE B - 40TH PERCENTILE FAIR MARKET RENTS FOR EXISTING HOUSING PAGE 28

M I S S I S S I P P I continued

NONMETROPOLITAN COUNTIES	O BR	1 BR	2 BR	3 BR	4 BR
Stone	250	297	368	473	532
Tallahatchie	250	297	368	473	532
Tippah	250	297	368	473	532
Tunica	250	297	368	473	532
Walthall	250	297	368	473	532
Washington	271	322	430	555	612
Webster	252	297	368	473	532
Winston	250	297	368	473	532
Yazoo	254	297	368	473	532

NONMETROPOLITAN COUNTIES	O BR	1 BR	2 BR	3 BR	4 BR
Sunflower	277	301	368	473	565
Tate	250	338	391	490	643
Tishomingo	250	297	368	473	532
Union	250	297	368	473	532
Warren	250	327	408	564	676
Wayne	250	297	368	473	532
Wilkinson	250	297	368	473	532
Yalobusha	252	297	368	473	532

M I S S O U R I

METROPOLITAN FMR AREAS	O BR	1 BR	2 BR	3 BR	4 BR	Counties of FMR AREA within STATE
Columbia, MO MSA	266	374	487	677	798	Boone
Joplin, MO MSA	259	300	398	524	563	Jasper, Newton
Kansas City, MO-KS MSA	394	496	597	826	915	Cass, Clay, Clinton, Jackson, Lafayette, Platte, Ray
St. Joseph, MO MSA	249	302	403	509	565	Andrew, Buchanan
St. Louis, MO-IL MSA	329	400	519	676	747	Crawford-Sullivan (part), Franklin, Jefferson, Lincoln St. Charles, St. Louis, Warren, St. Louis city
Springfield, MO MSA	272	345	446	616	641	Christian, Greene, Webster

NONMETROPOLITAN COUNTIES	O BR	1 BR	2 BR	3 BR	4 BR
Adair	241	301	399	503	603
Audrain	257	277	357	482	557
Barton	241	277	357	463	532
Benton	271	277	369	463	532
Butler	241	277	357	463	532
Callaway	284	288	384	487	631
Cape Girardeau	248	305	405	540	662
Carter	241	277	357	463	532
Chariton	241	277	357	463	532
Cole	241	318	423	565	592
Crawford	264	318	358	472	532
Dallas	241	277	357	463	532
Dekalb	249	277	357	469	532
Douglas	241	277	357	463	532
Gasconade	241	277	357	463	532
Grundy	241	277	357	463	532
Henry	274	279	373	467	613
Holt	241	277	357	463	532
Howell	241	277	357	463	532

NONMETROPOLITAN COUNTIES	O BR	1 BR	2 BR	3 BR	4 BR
Atchison	241	277	357	463	532
Barry	241	286	357	463	532
Bates	241	277	357	463	542
Bollinger	241	277	357	463	532
Caldwell	241	279	376	470	532
Camden	317	320	427	593	698
Carroll	241	277	357	463	532
Cedar	241	277	357	463	532
Clark	241	277	357	463	532
Cooper	241	277	357	463	532
Dade	241	277	357	463	532
Daviess	241	277	357	463	532
Dent	241	277	357	463	532
Dunklin	241	277	357	463	532
Gentry	241	277	357	463	532
Harrison	241	277	357	463	532
Hickory	241	277	357	463	532
Howard	241	277	357	463	534
Iron	241	277	357	463	532

Note: The FMRS for unit sizes larger than 4 BRs are calculated by adding 15% to the 4 BR FMR for each extra bedroom. For example, the FMR for a 5 BR unit is 1.15 times the 4BR FMR, and the FMR for a 6 BR unit is 1.30 times the 4 BR FMR. 082900

SCHEDULE B - 40TH PERCENTILE FAIR MARKET RENTS FOR EXISTING HOUSING

M I S S O U R I continued

NONMETROPOLITAN COUNTIES	O BR	1 BR	2 BR	3 BR	4 BR
Johnson	289	323	421	558	660
Laclede	241	277	357	467	532
Lewis	241	277	357	463	532
Livingston	241	277	358	463	532
Macon	259	298	383	498	571
Maries	241	277	357	463	532
Mercer	241	277	357	463	532
Mississippi	241	277	357	463	532
Monroe	241	277	357	463	532
Morgan	241	277	357	463	532
Nodaway	254	308	379	481	580
Osage	241	277	357	463	532
Pemiscot	241	277	357	463	532
Pettis	258	303	405	510	610
Pike	241	277	357	463	559
Pulaski	241	338	379	502	559
Ralls	241	277	357	463	532
Reynolds	241	277	357	463	532
St. Clair	241	277	357	463	532
St. Francois	264	332	420	527	691
Schuyler	241	277	357	463	532
Scott	289	291	390	526	606
Shelby	241	277	357	463	532
Stone	279	297	370	472	532
Taney	272	301	394	532	625
Vernon	241	277	357	475	532
Wayne	241	277	357	463	532
Wright	241	277	357	463	532

NONMETROPOLITAN COUNTIES	O BR	1 BR	2 BR	3 BR	4 BR
Knox	241	277	357	463	532
Lawrence	255	284	357	463	532
Linn	241	277	357	463	532
Mcdonald	241	277	357	463	532
Madison	241	277	357	463	532
Marion	241	277	357	463	532
Miller	264	318	357	467	552
Moniteau	241	277	357	463	532
Montgomery	255	293	377	490	562
New Madrid	241	277	357	463	532
Oregon	241	277	357	463	532
Ozark	241	277	357	463	532
Perry	291	296	396	527	554
Phelps	249	299	383	520	564
Polk	241	278	357	463	557
Putnam	241	277	357	463	532
Randolph	241	277	357	463	532
Ripley	241	277	357	463	532
Ste. Genevieve	241	286	369	472	598
Saline	241	277	367	463	532
Scotland	241	277	357	463	532
Shannon	241	277	357	463	532
Stoddard	241	277	357	463	532
Sullivan	241	277	357	463	532
Texas	241	277	357	463	532
Washington	281	341	382	477	535
Worth	241	277	357	463	532

M O N T A N A

METROPOLITAN FMR AREAS	O BR	1 BR	2 BR	3 BR	4 BR	Counties of FMR AREA within STATE
Billings, MT MSA	335	389	520	699	848	Yellowstone
Great Falls, MT MSA	335	387	510	664	790	Cascade
Missoula, MT MSA	335	393	523	674	857	Missoula

Note: The FMRS for unit sizes larger than 4 BRs are calculated by adding 15% to the 4 BR FMR for each extra bedroom. For example, the FMR for a 5 BR unit is 1.15 times the 4BR FMR, and the FMR for a 6 BR unit is 1.30 times the 4 BR FMR.

082900

SCHEDULE B - 40TH PERCENTILE FAIR MARKET RENTS FOR EXISTING HOUSING PAGE 30

M O N T A N A continued

NONMETROPOLITAN COUNTIES	O BR	1 BR	2 BR	3 BR	4 BR
Beaverhead	301	347	458	595	695
Blaine	301	347	458	595	695
Carbon	342	401	521	678	791
Chouteau	301	347	458	595	695
Daniels	301	368	458	595	695
Deer Lodge	301	347	458	595	695
Fergus	301	347	458	595	695
Gallatin	370	432	579	744	951
Glacier	301	347	458	595	695
Granite	301	347	458	595	695
Jefferson	317	347	458	595	695
Lake	327	347	458	595	695
Liberty	301	347	458	595	695
Mccone	301	366	458	595	695
Meagher	301	368	458	595	695
Musselshell	306	347	458	595	695
Petroleum	301	347	458	595	695
Pondera	301	367	458	595	695
Powell	306	347	458	595	695
Ravalli	301	347	458	595	695
Roosevelt	314	347	458	595	695
Sanders	301	347	458	595	695
Silver Bow	301	347	458	595	695
Sweet Grass	324	347	458	595	695
Toole	307	347	458	595	695
Valley	301	347	458	595	695
Wibaux	301	368	458	595	695

NONMETROPOLITAN COUNTIES	O BR	1 BR	2 BR	3 BR	4 BR
Big Horn	301	347	458	595	695
Broadwater	301	347	458	595	741
Carter	301	368	458	595	695
Custer	301	347	458	595	695
Dawson	301	347	458	595	695
Fallon	301	347	458	595	695
Flathead	301	348	465	649	764
Garfield	301	347	458	595	695
Golden Valley	301	367	458	595	695
Hill	310	347	458	595	695
Judith Basin	301	368	458	595	695
Lewis and Clark	334	391	520	723	856
Lincoln	327	347	458	595	695
Madison	307	347	458	595	695
Mineral	301	347	458	595	710
Park	301	347	458	595	703
Phillips	301	347	458	595	695
Powder River	301	352	458	595	695
Prairie	301	347	458	595	695
Richland	301	375	458	595	695
Rosebud	301	347	458	595	695
Sheridan	309	347	458	595	695
Stillwater	307	347	458	595	695
Teton	301	347	458	595	695
Treasure	301	347	458	595	695
Wheatland	301	347	458	595	695

N E B R A S K A

METROPOLITAN FMR AREAS	O BR	1 BR	2 BR	3 BR	4 BR	Counties of FMR AREA within STATE
Lincoln, NE MSA	318	408	538	714	834	Lancaster
Omaha, NE-IA MSA	343	469	593	777	872	Cass, Douglas, Sarpy, Washington
Sioux City, IA-NE MSA	349	419	522	651	744	Dakota

Note: The FMRS for unit sizes larger than 4 BRs are calculated by adding 15% to the 4 BR FMR for each extra bedroom. For example, the FMR for a 5 BR unit is 1.15 times the 4BR FMR, and the FMR for a 6 BR unit is 1.30 times the 4 BR FMR. 082900

SCHEDULE B - 40TH PERCENTILE FAIR MARKET RENTS FOR EXISTING HOUSING

N E B R A S K A continued

NONMETROPOLITAN COUNTIES	O BR	1 BR	2 BR	3 BR	4 BR
Adams	250	335	442	554	664
Arthur	240	309	394	504	573
Blaine	240	309	394	504	573
Box Butte	260	309	394	505	595
Brown	240	309	394	504	585
Burt	240	309	394	504	573
Cedar	240	309	394	504	573
Cherry	240	324	394	507	596
Clay	240	309	394	504	573
Cuming	240	325	394	504	573
Dawes	256	309	394	508	599
Deuel	240	309	394	504	573
Dodge	240	309	406	535	573
Fillmore	240	309	394	504	573
Frontier	269	309	394	504	573
Gage	240	310	401	511	573
Garfield	240	309	394	504	573
Grant	240	309	394	504	573
Hall	287	379	505	664	744
Harlan	240	309	394	505	573
Hitchcock	240	309	394	504	573
Hooker	240	323	394	505	573
Jefferson	240	309	394	504	573
Kearney	240	309	394	504	599
Keya Paha	240	309	394	504	573
Knox	240	320	394	504	573
Logan	240	309	394	504	600
Mcpherson	240	309	394	505	573
Merrick	240	309	394	504	573
Nance	240	309	394	504	573
Nuckolls	240	309	394	504	573
Pawnee	240	309	394	508	573
Phelps	268	309	394	505	599
Platte	240	309	394	550	573
Red Willow	240	309	394	504	583
Rock	240	316	394	504	573
Saunders	240	309	394	504	573
Seward	297	309	402	504	573
Sherman	240	311	394	504	600
Stanton	240	309	394	504	573

NONMETROPOLITAN COUNTIES	O BR	1 BR	2 BR	3 BR	4 BR
Antelope	240	324	394	507	573
Banner	240	309	394	505	573
Boone	240	309	394	504	596
Boyd	240	322	394	504	573
Buffalo	258	374	469	585	707
Butler	240	309	394	504	573
Chase	240	325	394	504	601
Cheyenne	268	309	394	504	573
Colfax	261	321	394	504	573
Custer	268	311	394	504	595
Dawson	263	321	394	508	573
Dixon	267	309	394	504	573
Dundy	240	309	394	504	573
Franklin	240	309	394	509	573
Furnas	240	309	394	504	596
Garden	240	321	394	507	599
Gosper	240	309	394	504	580
Greeley	240	309	394	504	583
Hamilton	240	309	394	508	573
Hayes	240	323	394	504	596
Holt	240	309	394	504	573
Howard	240	309	394	504	573
Johnson	240	313	394	504	573
Keith	240	309	394	504	573
Kimball	240	309	394	505	599
Lincoln	246	321	394	504	573
Loup	240	309	394	504	598
Madison	246	323	427	553	674
Morrill	240	311	394	504	596
Nemaha	240	309	394	504	573
Otoe	240	309	394	504	600
Perkins	240	309	394	504	573
Pierce	240	309	394	504	573
Polk	240	309	394	504	573
Richardson	240	309	394	504	573
Saline	240	322	394	504	573
Scotts Bluff	244	320	406	504	596
Sheridan	240	309	394	504	574
Sioux	240	309	394	504	599
Thayer	240	324	394	504	573

Note: The FMRS for unit sizes larger than 4 BRs are calculated by adding 15% to the 4 BR FMR for each extra bedroom. For example, the FMR for a 5 BR unit is 1.15 times the 4BR FMR, and the FMR for a 6 BR unit is 1.30 times the 4 BR FMR. 082900

SCHEDULE B - 40TH PERCENTILE FAIR MARKET RENTS FOR EXISTING HOUSING PAGE 32

N E B R A S K A continued

NONMETROPOLITAN COUNTIES	O BR	1 BR	2 BR	3 BR	4 BR
Thomas	240	309	394	504	573
Valley	240	309	394	504	573
Webster	240	309	394	504	573
York	240	309	399	504	573
Thurston	240	309	394	504	573
Wayne	274	309	394	504	596
Wheeler	240	309	394	505	573

N E V A D A

METROPOLITAN FMR AREAS	O BR	1 BR	2 BR	3 BR	4 BR	Counties of FMR AREA within STATE
Las Vegas, NV-AZ MSA	508	603	718	999	1180	Clark, Nye
Reno, NV MSA	492	570	733	1021	1206	Washoe

NONMETROPOLITAN COUNTIES	O BR	1 BR	2 BR	3 BR	4 BR
Churchill	445	452	604	832	988
Elko	404	462	616	813	1012
Eureka	328	535	603	750	839
Lander	331	513	603	753	987
Lyon	392	469	603	838	988
Pershing	456	462	616	770	881
White Pine	329	453	603	813	854
Douglas	399	582	731	1014	1128
Esmeralda	429	535	603	751	842
Humboldt	482	506	610	800	855
Lincoln	329	494	603	754	843
Mineral	333	455	606	794	993
Storey	462	468	616	857	1012
Carson City	346	473	632	879	1037

N E W H A M P S H I R E

METROPOLITAN FMR AREAS	O BR	1 BR	2 BR	3 BR	4 BR	Components of FMR AREA within STATE
Boston, MA-NH PMSA	695	782	979	1223	1437	Rockingham county towns of Seabrook town South Hampton town
Lawrence, MA-NH PMSA	502	606	763	953	1172	Rockingham county towns of Atkinson town, Chester town Danville town, Derry town, Fremont town, Hampstead town Kingston town, Newton town, Plaistow town, Raymond town Salem town, Sandown town, Windham town
Lowell, MA-NH PMSA	510	659	796	997	1115	Hillsborough county towns of Pelham town
Manchester, NH PMSA	410	585	730	913	1023	Hillsborough county towns of Bedford town, Goffstown town Manchester city, Weare town Merrimack county towns of Allenstown town, Hooksett town Rockingham county towns of Auburn town, Candia town Londonderry town
Nashua, NH PMSA	483	673	835	1136	1352	Hillsborough county towns of Amherst town, Brookline town Greenville town, Hollis town, Hudson town Litchfield town, Mason town, Merrimack town Milford town, Mont Vernon town, Nashua city New Ipswich town, Wilton town
Portsmouth-Rochester, NH-ME PMSA	497	595	765	981	1203	Rockingham county towns of Brentwood town East Kingston town, Epping town, Exeter town Greenland town, Hampton town, Hampton Falls town

Note: The FMRS for unit sizes larger than 4 BRs are calculated by adding 15% to the 4 BR FMR for each extra bedroom. For example, the FMR for a 5 BR unit is 1.15 times the 4BR FMR, and the FMR for a 6 BR unit is 1.30 times the 4 BR FMR. 082900

SCHEDULE B - 40TH PERCENTILE FAIR MARKET RENTS FOR EXISTING HOUSING PAGE 33

N E W H A M P S H I R E continued

METROPOLITAN FMR AREAS	0 BR	1 BR	2 BR	3 BR	4 BR	Components of FMR AREA within STATE
						Kensington town, New Castle town, Newfields town Newington town, Newmarket town, North Hampton town Portsmouth city, Rye town, Stratham town Strafford county towns of Barrington town, Dover city Durham town, Farmington town, Lee town, Madbury town Milton town, Rochester city, Rollinsford town Somersworth city

NONMETROPOLITAN COUNTIES	0 BR	1 BR	2 BR	3 BR	4 BR	Towns within non metropolitan counties
Belknap	436	504	663	896	1089	
Carroll	364	500	666	835	1041	
Cheshire	452	537	687	895	1061	
Coos	312	382	489	638	755	
Grafton	402	485	646	835	1055	
Hillsborough	428	535	713	943	1135	Antrim town, Bennington town, Deering town Francestown town, Greenfield town, Hancock town Hillsborough town, Lyndeborough town, New Boston town Peterborough town, Sharon town, Temple town Windsor town
Merrimack	450	538	671	860	960	Andover town, Boscawen town, Bow town, Bradford town Canterbury town, Chichester town, Concord city Danbury town, Dunbarton town, Epsom town, Franklin city Henniker town, Hill town, Hopkinton town, Loudon town Newbury town, New London town, Northfield town Pembroke town, Pittsfield town, Salisbury town Sutton town, Warner town, Webster town, Wilmot town
Rockingham	468	547	733	1016	1173	Deerfield town, Northwood town, Nottingham town
Strafford	414	562	749	939	1052	Middleton town, New Durham town, Strafford town
Sullivan	435	442	574	754	804	

N E W J E R S E Y

METROPOLITAN FMR AREAS	0 BR	1 BR	2 BR	3 BR	4 BR	Counties of FMR AREA within STATE
Atlantic-Cape May, NJ PMSA	511	582	774	970	1108	Atlantic, Cape May
Bergen-Passaic, NJ PMSA	654	797	934	1244	1535	Bergen, Passaic
Jersey City, NJ PMSA	601	709	826	1050	1155	Hudson
Middlesex-Somerset-Hunterdon, NJ PMSA	699	766	956	1298	1499	Hunterdon, Middlesex, Somerset
Monmouth-Ocean, NJ PMSA	614	735	933	1240	1454	Monmouth, Ocean
Newark, NJ PMSA	567	724	872	1099	1388	Essex, Morris, Sussex, Union, Warren
Philadelphia, PA-NJ PMSA	497	611	755	945	1185	Burlington, Camden, Gloucester, Salem
Trenton, NJ PMSA	507	707	862	1167	1409	Mercer
Vineland-Millville-Bridgeton, NJ PMSA	493	600	723	902	1014	Cumberland

Note: The FMRS for unit sizes larger than 4 BRs are calculated by adding 15% to the 4 BR FMR for each extra bedroom. For example, the FMR for a 5 BR unit is 1.15 times the 4BR FMR, and the FMR for a 6 BR unit is 1.30 times the 4 BR FMR. 082900

SCHEDULE B - 40TH PERCENTILE FAIR MARKET RENTS FOR EXISTING HOUSING PAGE 34

N E W M E X I C O

METROPOLITAN FMR AREAS	O BR	1 BR	2 BR	3 BR	4 BR	Counties of FMR AREA within STATE
Albuquerque, NM MSA	397	473	592	816	963	Bernalillo, Sandoval, Valencia
Las Cruces, NM MSA	296	372	442	606	714	Dona Ana
Santa Fe, NM MSA	428	607	749	1006	1139	Los Alamos, Santa Fe

NONMETROPOLITAN COUNTIES	O BR	1 BR	2 BR	3 BR	4 BR
Catron	273	319	396	532	601
Cibola	284	310	396	532	601
Curry	273	317	415	532	601
Eddy	280	309	396	532	619
Guadalupe	273	309	396	532	605
Hidalgo	273	309	396	532	601
Lincoln	309	317	418	551	689
Mckinley	273	343	436	543	609
Otero	273	309	396	552	601
Rio Arriba	319	326	401	532	601
San Juan	308	330	412	572	678
Sierra	273	309	396	532	601
Taos	469	475	633	791	1042
Union	273	333	396	532	601

NONMETROPOLITAN COUNTIES	O BR	1 BR	2 BR	3 BR	4 BR
Chaves	273	310	409	563	601
Colfax	273	317	396	532	601
Debaca	273	310	396	532	601
Grant	323	369	472	633	714
Harding	273	309	396	532	601
Lea	273	309	396	532	601
Luna	300	330	423	567	640
Mora	273	309	396	532	601
Quay	273	395	445	557	623
Roosevelt	273	309	396	532	601
San Miguel	302	309	408	532	601
Socorro	273	309	396	532	617
Torrance	299	323	396	532	601

N E W Y O R K

METROPOLITAN FMR AREAS	O BR	1 BR	2 BR	3 BR	4 BR	Counties of FMR AREA within STATE
Albany-Schenectady-Troy, NY MSA	401	494	607	762	851	Albany, Montgomery, Rensselaer, Saratoga, Schenectady Schoharie
Binghamton, NY MSA	360	404	504	640	718	Broome, Tioga
Buffalo-Niagara Falls, NY PMSA	359	425	513	640	718	Erie, Niagara
Dutchess County, NY PMSA	595	754	933	1212	1416	Dutchess
Elmira, NY MSA	360	404	496	627	748	Chemung
Glens Falls, NY MSA	360	468	571	715	799	Warren, Washington
Jamestown, NY MSA	360	404	486	627	718	Chautauqua
Nassau-Suffolk, NY PMSA	798	962	1173	1633	1749	Nassau, Suffolk
New York, NY PMSA	750	836	949	1187	1330	Bronx, Kings, New York, Putnam, Queens, Richmond Rockland
Westchester County, NY	720	939	1144	1486	1774	Westchester
Newburgh, NY-PA PMSA	476	618	757	960	1095	Orange
Rochester, NY MSA	387	504	612	785	858	Genesee, Livingston, Monroe, Ontario, Orleans, Wayne
Syracuse, NY MSA	385	464	575	734	814	Cayuga, Madison, Onondaga, Oswego
Utica-Rome, NY MSA	359	403	484	686	715	Herkimer, Oneida

Note: The FMRS for unit sizes larger than 4 BRs are calculated by adding 15% to the 4 BR FMR for each extra bedroom. For example, the FMR for a 5 BR unit is 1.15 times the 4BR FMR, and the FMR for a 6 BR unit is 1.30 times the 4 BR FMR. 082900

SCHEDULE B - 40TH PERCENTILE FAIR MARKET RENTS FOR EXISTING HOUSING

N E W Y O R K continued

NONMETROPOLITAN COUNTIES	O BR	1 BR	2 BR	3 BR	4 BR
Allegany	359	403	484	626	715
Chenango	382	403	484	626	715
Columbia	448	471	604	791	846
Delaware	359	403	484	626	769
Franklin	359	403	484	626	715
Greene	359	465	557	719	878
Jefferson	386	455	535	670	750
Otsego	359	424	488	630	800
Schuyler	388	413	491	683	805
Steuben	371	422	484	633	715
Tompkins	468	504	647	903	1064
Wyoming	359	403	484	626	715

NONMETROPOLITAN COUNTIES	O BR	1 BR	2 BR	3 BR	4 BR
Cattaraugus	359	403	484	626	715
Clinton	359	403	521	651	730
Cortland	359	428	536	670	793
Essex	359	408	512	641	715
Fulton	359	403	484	626	715
Hamilton	359	431	496	626	715
Lewis	359	403	484	626	715
St. Lawrence	359	403	484	626	715
Seneca	383	411	497	642	715
Sullivan	465	521	635	878	890
Ulster	440	612	736	958	1206
Yates	359	403	484	626	715

N O R T H C A R O L I N A

METROPOLITAN FMR AREAS	O BR	1 BR	2 BR	3 BR	4 BR	Counties of FMR AREA within STATE
Asheville, NC MSA	349	422	550	717	773	Buncombe, Madison
Charlotte-Gastonia-Rock Hill, NC-SC MSA	519	585	659	869	1040	Cabarrus, Gaston, Lincoln, Mecklenburg, Rowan, Union
Fayetteville, NC MSA	382	434	487	674	801	Cumberland
Goldsboro, NC MSA	347	400	485	625	730	Wayne
Greensboro--Winston-Salem--High Point, NC MSA	414	472	562	775	788	Alamance, Davidson, Davie, Forsyth, Guilford, Randolph Stokes, Yadkin
Greenville, NC MSA	429	435	564	761	930	Pitt
Hickory-Morganton, NC MSA	395	430	499	630	746	Alexander, Burke, Caldwell, Catawba
Jacksonville, NC MSA	357	416	471	653	772	Onslow
Norfolk-Virginia Beach-Newport News, VA-NC MSA	440	496	586	817	960	Currituck
Raleigh-Durham-Chapel Hill, NC MSA	530	643	755	1013	1195	Chatham, Durham, Franklin, Johnston, Orange, Wake
Rocky Mount, NC MSA	334	361	438	581	641	Edgecombe, Nash
Wilmington, NC MSA	458	502	615	842	1004	Brunswick, New Hanover

NONMETROPOLITAN COUNTIES	O BR	1 BR	2 BR	3 BR	4 BR
Alleghany	295	345	413	532	630
Ashe	295	340	413	532	604
Beaufort	295	340	413	532	604
Bladen	295	340	413	532	604
Carteret	334	366	446	620	690
Cherokee	295	340	413	532	604
Clay	295	340	413	532	604
Columbus	295	340	413	532	604
Dare	306	485	558	766	783
Gates	295	340	413	532	604

NONMETROPOLITAN COUNTIES	O BR	1 BR	2 BR	3 BR	4 BR
Anson	295	340	413	532	604
Avery	329	371	451	566	632
Bertie	295	340	413	532	604
Camden	295	377	502	628	705
Caswell	295	340	413	532	604
Chowan	295	340	413	532	604
Cleveland	295	346	413	547	604
Craven	295	369	444	581	622
Duplin	295	340	413	532	604
Graham	295	340	413	532	604

Note: The FMRS for unit sizes larger than 4 BRs are calculated by adding 15% to the 4 BR FMR for each extra bedroom. For example, the FMR for a 5 BR unit is 1.15 times the 4BR FMR, and the FMR for a 6 BR unit is 1.30 times the 4 BR FMR.

082900

SCHEDULE B - 40TH PERCENTILE FAIR MARKET RENTS FOR EXISTING HOUSING PAGE 36

N O R T H C A R O L I N A continued

NONMETROPOLITAN COUNTIES	O BR	1 BR	2 BR	3 BR	4 BR
Granville	311	340	413	547	619
Halifax	295	340	413	532	604
Haywood	307	349	425	571	621
Hertford	295	340	413	532	604
Hyde	295	340	413	532	604
Jackson	295	340	413	578	755
Lee	295	377	446	578	626
Mcdowell	295	360	431	589	698
Martin	295	340	413	532	604
Montgomery	295	340	413	532	604
Northampton	295	340	413	532	604
Pasquotank	340	364	453	630	636
Perquimans	295	340	413	532	604
Polk	295	374	419	532	604
Robeson	295	347	413	532	604
Rutherford	298	340	413	532	604
Scotland	295	340	413	532	604
Surry	295	340	413	532	604
Transylvania	341	365	462	612	654
Vance	312	353	413	532	604
Washington	295	340	413	532	604
Wilkes	335	378	425	588	660
Yancey	295	346	413	532	623

NONMETROPOLITAN COUNTIES	O BR	1 BR	2 BR	3 BR	4 BR
Greene	295	340	413	532	604
Harnett	333	385	467	604	682
Henderson	382	393	486	646	744
Hoke	295	340	413	532	604
Iredell	398	408	538	673	752
Jones	295	340	413	532	604
Lenoir	295	340	413	532	604
Macon	295	352	413	532	604
Mitchell	295	386	443	605	632
Moore	339	409	489	668	801
Pamlico	295	340	413	532	604
Pender	356	431	498	642	784
Person	295	340	443	578	677
Richmond	295	340	413	532	604
Rockingham	295	340	413	532	604
Sampson	295	340	413	532	604
Stanly	295	340	419	566	604
Swain	295	340	413	532	604
Tyrrell	295	340	413	532	604
Warren	295	340	413	532	604
Watauga	385	462	584	795	958
Wilson	308	340	418	532	604

N O R T H D A K O T A

METROPOLITAN FMR AREAS	O BR	1 BR	2 BR	3 BR	4 BR	Counties of FMR AREA within STATE
Bismarck, ND MSA	350	392	522	727	860	Burleigh, Morton
Fargo-Moorhead, ND-MN MSA	344	473	571	793	849	Cass
Grand Forks, ND-MN MSA	355	423	557	768	857	Grand Forks

NONMETROPOLITAN COUNTIES	O BR	1 BR	2 BR	3 BR	4 BR
Adams	231	290	374	486	568
Benson	262	290	374	486	568
Bottineau	231	290	374	486	568
Burke	251	290	374	486	568
Dickey	251	290	374	486	568
Dunn	231	290	374	486	568
Emmons	231	290	374	486	568
Golden Valley	231	298	395	494	568

NONMETROPOLITAN COUNTIES	O BR	1 BR	2 BR	3 BR	4 BR
Barnes	231	292	386	505	568
Billings	251	290	374	486	568
Bowman	231	290	374	486	568
Cavalier	231	299	397	495	611
Divide	231	290	374	486	568
Eddy	231	290	374	486	568
Foster	231	290	376	486	568
Grant	231	290	374	486	568

Note: The FMRS for unit sizes larger than 4 BRs are calculated by adding 15% to the 4 BR FMR for each extra bedroom. For example, the FMR for a 5 BR unit is 1.15 times the 4BR FMR, and the FMR for a 6 BR unit is 1.30 times the 4 BR FMR. 082900

SCHEDULE B - 40TH PERCENTILE FAIR MARKET RENTS FOR EXISTING HOUSING

N O R T H D A K O T A continued

NONMETROPOLITAN COUNTIES	O BR	1 BR	2 BR	3 BR	4 BR
Griggs	231	290	374	486	568
Kidder	231	290	374	486	568
Logan	231	290	374	486	568
Mcintosh	231	290	374	486	568
Mclean	245	290	374	486	568
Mountrail	255	290	374	486	568
Oliver	231	290	374	486	568
Pierce	231	290	374	501	568
Ransom	236	290	374	486	568
Richland	243	290	381	486	568
Sargent	231	290	374	486	568
Sioux	231	290	374	486	568
Stark	231	290	374	486	568
Stutsman	276	290	378	527	621
Traill	243	309	374	486	568
Ward	231	318	424	573	683
Williams	231	290	374	486	568

NONMETROPOLITAN COUNTIES	O BR	1 BR	2 BR	3 BR	4 BR
Hettinger	231	290	374	486	568
Lamoure	251	290	374	486	568
Mchenry	231	290	374	486	568
Mckenzie	231	290	374	486	568
Mercer	231	290	374	486	568
Nelson	231	290	374	486	568
Pembina	231	290	374	493	586
Ramsey	238	318	424	531	693
Renville	267	290	374	489	578
Rolette	250	319	384	486	568
Sheridan	231	290	374	486	568
Slope	231	290	374	486	568
Steele	231	290	374	486	568
Towner	264	298	395	494	651
Walsh	308	329	408	511	572
Wells	246	290	374	486	568

O H I O

METROPOLITAN FMR AREAS	O BR	1 BR	2 BR	3 BR	4 BR	Counties of FMR AREA within STATE
Akron, OH PMSA	387	469	602	753	845	Portage, Summit
Brown County, OH	301	354	441	571	630	Brown
Canton-Massillon, OH MSA	292	380	484	606	681	Carroll, Stark
Cincinnati, OH-KY-IN	324	416	557	746	806	Clermont, Hamilton, Warren
Cleveland-Lorain-Elyria, OH PMSA	415	521	645	820	924	Ashtabula, Cuyahoga, Geauga, Lake, Lorain, Medina
Columbus, OH MSA	398	471	605	768	883	Delaware, Fairfield, Franklin, Licking, Madison, Pickaway
Dayton-Springfield, OH MSA	389	436	556	718	806	Clark, Greene, Miami, Montgomery
Hamilton-Middletown, OH PMSA	326	464	594	743	832	Butler
Huntington-Ashland, WV-KY-OH MSA	307	360	444	566	624	Lawrence
Lima, OH MSA	292	350	460	587	643	Allen, Auglaize
Mansfield, OH MSA	292	350	445	555	622	Crawford, Richland
Parkersburg-Marietta, WV-OH MSA	309	371	424	550	597	Washington
Steubenville-Weirton, OH-WV MSA	292	344	431	549	613	Jefferson
Toledo, OH MSA	365	444	542	698	758	Fulton, Lucas, Wood
Wheeling, WV-OH MSA	318	349	431	549	613	Belmont
Youngstown-Warren, OH MSA	342	403	505	634	722	Columbiana, Mahoning, Trumbull

Note: The FMRS for unit sizes larger than 4 BRs are calculated by adding 15% to the 4 BR FMR for each extra bedroom. For example, the FMR for a 5 BR unit is 1.15 times the 4BR FMR, and the FMR for a 6 BR unit is 1.30 times the 4 BR FMR. 082900

SCHEDULE B - 40TH PERCENTILE FAIR MARKET RENTS FOR EXISTING HOUSING

O H I O continued

NONMETROPOLITAN COUNTIES	O BR	1 BR	2 BR	3 BR	4 BR
Adams	282	335	417	532	596
Athens	390	440	517	678	832
Clinton	322	413	496	691	697
Darke	310	335	420	532	596
Erie	282	376	469	633	768
Gallia	282	335	417	532	596
Hancock	358	362	458	585	640
Harrison	282	335	417	532	596
Highland	282	335	417	532	596
Holmes	282	335	417	532	596
Jackson	282	335	417	532	596
Logan	331	336	433	583	607
Meigs	282	335	417	532	596
Monroe	282	335	417	532	596
Morrow	282	335	417	532	596
Noble	282	335	417	532	604
Paulding	282	335	417	532	596
Pike	296	353	438	561	626
Putnam	292	335	417	532	596
Sandusky	282	366	469	592	654
Seneca	283	335	417	536	596
Tuscarawas	282	335	437	547	613
Van Wert	282	339	417	532	596
Wayne	282	373	459	583	642
Wyandot	282	335	417	532	596

NONMETROPOLITAN COUNTIES	O BR	1 BR	2 BR	3 BR	4 BR
Ashland	282	335	440	550	616
Champaign	282	344	447	558	625
Coshocton	282	335	417	532	596
Defiance	335	381	502	633	703
Fayette	306	335	417	532	596
Guernsey	282	335	417	532	596
Hardin	282	335	417	532	596
Henry	325	360	449	580	659
Hocking	282	335	417	532	596
Huron	327	356	443	585	622
Knox	332	365	468	605	669
Marion	282	335	417	532	596
Mercer	282	335	417	532	613
Morgan	282	340	417	532	596
Muskingum	282	335	417	532	596
Ottawa	282	417	479	652	697
Perry	282	335	417	532	596
Preble	289	343	427	547	611
Ross	327	341	417	532	596
Scioto	282	335	417	532	596
Shelby	282	344	459	573	642
Union	282	390	515	644	745
Vinton	282	335	417	532	596
Williams	313	350	436	557	623

O K L A H O M A

METROPOLITAN FMR AREAS	O BR	1 BR	2 BR	3 BR	4 BR	Counties of FMR AREA within STATE
Enid, OK MSA	300	304	403	561	642	Garfield
Fort Smith, AR-OK MSA	337	341	449	600	630	Sequoyah
Lawton, OK MSA	371	373	475	659	722	Comanche
Oklahoma City, OK MSA	363	395	512	712	796	Canadian, Cleveland, Logan, Mcclain, Oklahoma Pottawatomie
Tulsa, OK MSA	337	402	527	733	865	Creek, Osage, Rogers, Tulsa, Wagoner

Note: The FMRS for unit sizes larger than 4 BRs are calculated by adding 15% to the 4 BR FMR for each extra bedroom. For example, the FMR for a 5 BR unit is 1.15 times the 4BR FMR, and the FMR for a 6 BR unit is 1.30 times the 4 BR FMR.

082900

SCHEDULE B - 40TH PERCENTILE FAIR MARKET RENTS FOR EXISTING HOUSING

O K L A H O M A continued

NONMETROPOLITAN COUNTIES	O BR	1 BR	2 BR	3 BR	4 BR
Adair	249	286	357	475	544
Atoka	249	286	357	475	544
Beckham	253	286	357	475	544
Bryan	249	286	357	475	544
Carter	249	288	360	501	544
Choctaw	249	286	357	475	544
Coal	249	286	357	475	544
Craig	249	286	357	487	576
Delaware	249	286	357	475	554
Ellis	249	286	357	475	544
Grady	273	286	370	503	607
Greer	249	286	357	475	544
Harper	249	286	357	475	544
Hughes	249	286	357	475	544
Jefferson	249	286	357	475	544
Kay	276	292	384	535	627
Kiowa	249	286	357	475	544
Le Flore	249	286	357	475	544
Love	249	286	361	475	544
Mcintosh	249	286	357	475	544
Marshall	249	286	357	475	544
Murray	249	286	357	475	544
Noble	249	286	357	475	544
Okfuskee	249	286	357	475	544
Ottawa	268	286	357	475	544
Payne	288	340	435	601	674
Pontotoc	249	286	357	475	544
Roger Mills	249	286	357	475	544
Stephens	253	286	357	475	566
Tillman	249	286	357	475	544
Washita	249	286	357	475	544
Woodward	249	286	357	475	544

NONMETROPOLITAN COUNTIES	O BR	1 BR	2 BR	3 BR	4 BR
Alfalfa	249	286	357	475	544
Beaver	249	290	357	475	544
Blaine	249	286	357	475	544
Caddo	249	286	357	475	544
Cherokee	261	295	357	475	552
Cimarron	249	286	357	475	544
Cotton	249	286	357	475	544
Custer	249	286	366	509	587
Dewey	249	286	357	475	544
Garvin	249	286	357	475	548
Grant	249	286	357	475	544
Harmon	249	286	357	475	544
Haskell	249	286	357	475	544
Jackson	249	323	394	518	584
Johnston	249	286	357	475	544
Kingfisher	249	294	365	478	544
Latimer	249	286	357	475	544
Lincoln	267	286	357	475	544
Mccurtain	249	286	357	475	544
Major	249	299	357	495	544
Mayes	249	290	386	487	544
Muskogee	270	303	357	493	544
Nowata	249	286	357	475	544
Okmulgee	253	286	357	475	544
Pawnee	281	286	370	476	544
Pittsburg	249	286	357	475	544
Pushmataha	249	286	357	475	544
Seminole	249	286	357	475	544
Texas	249	296	357	476	544
Washington	249	342	416	552	645
Woods	249	286	357	475	544

O R E G O N

METROPOLITAN FMR AREAS	O BR	1 BR	2 BR	3 BR	4 BR	Counties of FMR AREA within STATE
Corvallis, OR MSA	385	499	633	952	1011	Benton
Eugene-Springfield, OR MSA	339	465	606	846	977	Lane
Medford-Ashland, OR MSA	348	456	610	848	945	Jackson

Note: The FMRS for unit sizes larger than 4 BRs are calculated by adding 15% to the 4 BR FMR for each extra bedroom. For example, the FMR for a 5 BR unit is 1.15 times the 4BR FMR, and the FMR for a 6 BR unit is 1.30 times the 4 BR FMR. 082900

SCHEDULE B - 40TH PERCENTILE FAIR MARKET RENTS FOR EXISTING HOUSING PAGE 40

O R E G O N continued

METROPOLITAN FMR AREAS	O BR	1 BR	2 BR	3 BR	4 BR	Counties of FMR AREA within STATE
Portland-Vancouver, OR-WA PMSA	481	592	730	1015	1102	Clackamas, Columbia, Multnomah, Washington, Yamhill
Salem, OR PMSA	407	480	615	846	886	Marion, Polk

NONMETROPOLITAN COUNTIES	O BR	1 BR	2 BR	3 BR	4 BR
Baker	315	373	484	666	742
Coos	315	384	510	710	742
Curry	315	428	568	728	895
Douglas	315	373	484	666	793
Grant	315	373	484	666	742
Hood River	370	416	565	736	870
Josephine	315	382	492	666	776
Lake	315	373	484	666	742
Linn	378	449	582	801	893
Morrow	315	373	484	666	742
Tillamook	315	373	484	666	742
Union	315	373	484	666	742
Wasco	383	475	531	723	813

NONMETROPOLITAN COUNTIES	O BR	1 BR	2 BR	3 BR	4 BR
Clatsop	363	430	563	768	863
Crook	315	373	484	666	742
Deschutes	389	447	598	833	964
Gilliam	315	397	484	666	742
Harney	315	373	484	666	742
Jefferson	315	373	484	666	742
Klamath	315	373	484	666	788
Lincoln	382	388	517	719	782
Malheur	315	373	484	666	742
Sherman	315	373	484	666	742
Umatilla	315	373	484	666	742
Wallowa	315	373	484	666	742
Wheeler	315	373	484	666	742

P E N N S Y L V A N I A

METROPOLITAN FMR AREAS	O BR	1 BR	2 BR	3 BR	4 BR	Counties of FMR AREA within STATE
Allentown-Bethlehem-Easton, PA MSA	377	511	608	792	889	Carbon, Lehigh, Northampton
Altoona, PA MSA	288	365	438	571	639	Blair
Erie, PA MSA	292	381	448	579	647	Erie
Harrisburg-Lebanon-Carlisle, PA MSA	346	443	568	716	798	Cumberland, Dauphin, Lebanon, Perry
Johnstown, PA MSA	292	371	446	579	647	Cambria, Somerset
Lancaster, PA MSA	384	470	586	765	823	Lancaster
Newburgh, NY-PA PMSA	476	618	757	960	1095	Pike
Philadelphia, PA-NJ PMSA	497	611	755	945	1185	Bucks, Chester, Delaware, Montgomery, Philadelphia
Pittsburgh, PA PMSA	389	476	574	719	803	Allegheny, Beaver, Butler, Fayette, Washington Westmoreland
Reading, PA MSA	303	448	553	691	779	Berks
Scranton--Wilkes-Barre--Hazleton, PA MSA	292	408	489	610	737	Columbia, Lackawanna, Luzerne, Wyoming
Sharon, PA MSA	320	371	446	579	647	Mercer
State College, PA MSA	419	513	635	832	890	Centre
Williamsport, PA MSA	292	373	448	579	647	Lycoming
York, PA MSA	325	446	553	690	772	York

Note: The FMRS for unit sizes larger than 4 BRs are calculated by adding 15% to the 4 BR FMR for each extra bedroom. For example, the FMR for a 5 BR unit is 1.15 times the 4BR FMR, and the FMR for a 6 BR unit is 1.30 times the 4 BR FMR. 082900

SCHEDULE B - 40TH PERCENTILE FAIR MARKET RENTS FOR EXISTING HOUSING

P E N N S Y L V A N I A continued

NONMETROPOLITAN COUNTIES	O BR	1 BR	2 BR	3 BR	4 BR
Adams	285	384	509	660	835
Bedford	285	363	434	567	633
Cameron	285	363	434	567	633
Clearfield	285	363	434	567	633
Crawford	285	363	434	567	633
Forest	285	363	434	567	633
Fulton	285	363	434	567	633
Huntingdon	285	363	434	567	633
Jefferson	285	363	434	567	633
Lawrence	285	363	434	567	633
Mifflin	317	363	434	567	633
Montour	337	363	456	633	748
Potter	285	363	434	567	633
Snyder	343	363	435	567	633
Susquehanna	341	363	434	567	673
Union	344	457	571	714	798
Warren	285	363	434	567	633

NONMETROPOLITAN COUNTIES	O BR	1 BR	2 BR	3 BR	4 BR
Armstrong	289	383	434	567	712
Bradford	289	367	447	585	641
Clarion	285	363	434	567	633
Clinton	285	363	434	567	633
Elk	285	363	434	567	633
Franklin	285	363	440	606	633
Greene	285	363	434	567	633
Indiana	327	365	434	567	633
Juniata	285	363	434	567	633
Mc Kean	285	365	434	567	633
Monroe	456	544	672	917	1025
Northumberland	301	381	465	618	688
Schuylkill	285	363	452	567	633
Sullivan	285	363	434	567	633
Tioga	285	363	434	567	633
Venango	285	363	434	567	633
Wayne	286	442	521	664	853

R H O D E I S L A N D

METROPOLITAN FMR AREAS	O BR	1 BR	2 BR	3 BR	4 BR	Components of FMR AREA within STATE
New London-Norwich, CT-RI MSA	501	606	738	923	1055	Washington county towns of Hopkinton town, Westerly town
Providence-Fall River-Warwick, RI-MA MSA	384	523	628	789	972	Bristol county towns of Barrington town, Bristol town Warren town Kent county towns of Coventry town, East Greenwich tow Warwick city, West Greenwich tow, West Warwick town Newport county towns of Jamestown town Little Compton tow, Tiverton town Providence county towns of Burrillville town Central Falls city, Cranston city, Cumberland town East Providence ci, Foster town, Glocester town Johnston town, Lincoln town, North Providence t North Smithfield t, Pawtucket city, Providence city Scituate town, Smithfield town, Woonsocket city Washington county towns of Charlestown town, Exeter town Narragansett town, North Kingstown to, Richmond town South Kingstown to

Note: The FMRS for unit sizes larger than 4 BRs are calculated by adding 15% to the 4 BR FMR for each extra bedroom. For example, the FMR for a 5 BR unit is 1.15 times the 4BR FMR, and the FMR for a 6 BR unit is 1.30 times the 4 BR FMR. 082900

SCHEDULE B - 40TH PERCENTILE FAIR MARKET RENTS FOR EXISTING HOUSING PAGE 42

R H O D E I S L A N D continued

NONMETROPOLITAN COUNTIES	O BR	1 BR	2 BR	3 BR	4 BR	Towns within non metropolitan counties
Newport	565	658	845	1058	1183	Middletown town, Newport city, Portsmouth town
Washington	667	751	844	1089	1199	New Shoreham town

S O U T H C A R O L I N A

METROPOLITAN FMR AREAS	O BR	1 BR	2 BR	3 BR	4 BR	Counties of FMR AREA within STATE
Augusta-Aiken, GA-SC MSA	389	465	548	744	880	Aiken, Edgefield
Charleston-North Charleston, SC MSA	410	476	546	726	846	Berkeley, Charleston, Dorchester
Charlotte-Gastonia-Rock Hill, NC-SC MSA	519	585	659	869	1040	York
Columbia, SC MSA	439	484	556	735	846	Lexington, Richland
Florence, SC MSA	333	370	481	600	673	Florence
Greenville-Spartanburg-Anderson, SC MSA	395	478	539	679	799	Anderson, Cherokee, Greenville, Pickens, Spartanburg
Myrtle Beach, SC MSA	431	438	561	702	786	Horry
Sumter, SC MSA	352	390	442	605	719	Sumter

NONMETROPOLITAN COUNTIES	O BR	1 BR	2 BR	3 BR	4 BR
Abbeville	290	338	411	528	604
Bamberg	290	338	411	528	604
Beaufort	414	508	585	730	818
Chester	290	338	411	528	604
Clarendon	290	338	411	528	604
Darlington	290	338	411	528	604
Fairfield	290	389	443	552	619
Greenwood	291	338	411	528	604
Jasper	290	338	411	528	604
Lancaster	304	339	411	528	604
Lee	290	338	411	528	604
Marion	290	338	411	528	604
Newberry	290	338	411	528	604
Orangeburg	290	338	411	528	604
Union	290	338	411	528	604

NONMETROPOLITAN COUNTIES	O BR	1 BR	2 BR	3 BR	4 BR
Allendale	290	338	411	528	604
Barnwell	305	338	413	528	604
Calhoun	290	338	411	528	604
Chesterfield	290	338	411	528	604
Colleton	290	338	411	528	604
Dillon	290	338	411	528	604
Georgetown	290	369	414	528	629
Hampton	290	338	411	528	604
Kershaw	290	338	411	528	604
Laurens	290	338	411	528	604
Mccormick	290	338	411	528	643
Marlboro	290	338	411	528	604
Oconee	290	338	411	528	604
Saluda	290	338	411	528	604
Williamsburg	290	338	411	528	604

S O U T H D A K O T A

METROPOLITAN FMR AREAS	O BR	1 BR	2 BR	3 BR	4 BR	Counties of FMR AREA within STATE
Rapid City, SD MSA	362	431	574	781	945	Pennington
Sioux Falls, SD MSA	350	484	614	777	892	Lincoln, Minnehaha

Note: The FMRS for unit sizes larger than 4 BRs are calculated by adding 15% to the 4 BR FMR for each extra bedroom. For example, the FMR for a 5 BR unit is 1.15 times the 4BR FMR, and the FMR for a 6 BR unit is 1.30 times the 4 BR FMR. 082900

SCHEDULE B - 40TH PERCENTILE FAIR MARKET RENTS FOR EXISTING HOUSING

S O U T H D A K O T A continued

NONMETROPOLITAN COUNTIES	O BR	1 BR	2 BR	3 BR	4 BR
Aurora	256	343	427	565	654
Bennett	256	340	427	565	654
Brookings	274	435	482	652	769
Brule	256	340	427	565	654
Butte	296	403	536	700	825
Charles Mix	256	340	427	565	654
Clay	285	378	475	629	780
Corson	256	340	427	565	654
Davison	286	362	455	609	697
Deuel	256	340	427	565	654
Douglas	284	340	427	565	654
Fall River	292	340	427	565	654
Grant	256	340	427	565	654
Haakon	256	348	427	565	654
Hand	256	340	427	565	654
Harding	256	348	427	565	654
Hutchinson	256	340	427	565	654
Jackson	256	345	427	565	654
Jones	256	340	427	565	654
Lake	256	345	427	565	654
Lyman	256	340	427	565	654
Mcpherson	256	340	427	565	654
Meade	360	406	542	709	837
Miner	256	345	427	565	654
Perkins	256	340	427	565	654
Roberts	256	340	427	565	654
Shannon	256	345	427	565	654
Stanley	256	348	427	565	654
Todd	282	340	427	565	654
Turner	256	340	427	565	654
Walworth	256	348	427	565	654
Ziebach	256	340	427	565	654

NONMETROPOLITAN COUNTIES	O BR	1 BR	2 BR	3 BR	4 BR
Beadle	256	340	427	565	654
Bon Homme	284	340	427	565	654
Brown	282	374	470	622	720
Buffalo	256	340	427	565	660
Campbell	256	340	427	565	654
Clark	256	340	427	565	654
Codington	295	391	492	651	753
Custer	256	340	427	565	654
Day	286	340	427	565	654
Dewey	256	340	427	565	654
Edmunds	256	340	427	565	654
Faulk	256	340	450	565	654
Gregory	257	340	427	565	654
Hamlin	256	340	427	565	654
Hanson	260	356	474	596	667
Hughes	291	352	466	613	726
Hyde	256	346	427	565	654
Jerauld	256	343	427	565	654
Kingsbury	279	340	427	565	654
Lawrence	294	423	532	728	824
Mccook	256	340	427	565	654
Marshall	303	340	427	565	654
Mellette	306	345	427	565	654
Moody	256	340	427	565	654
Potter	256	340	427	565	654
Sanborn	256	340	427	565	654
Spink	278	340	434	565	654
Sully	256	340	427	565	654
Tripp	256	340	427	565	654
Union	269	340	427	565	654
Yankton	256	340	427	565	654

T E N N E S S E E

METROPOLITAN FMR AREAS	O BR	1 BR	2 BR	3 BR	4 BR	Counties of FMR AREA within STATE
Chattanooga, TN-GA MSA	372	434	522	674	768	Hamilton, Marion
Clarksville-Hopkinsville, TN-KY MSA	345	386	454	618	636	Montgomery
Jackson, TN MSA	267	353	473	654	658	Madison, Chester

Note: The FMRS for unit sizes larger than 4 BRs are calculated by adding 15% to the 4 BR FMR for each extra bedroom. For example, the FMR for a 5 BR unit is 1.15 times the 4BR FMR, and the FMR for a 6 BR unit is 1.30 times the 4 BR FMR. 082900

SCHEDULE B - 40TH PERCENTILE FAIR MARKET RENTS FOR EXISTING HOUSING PAGE 44

T E N N E S S E E continued

METROPOLITAN FMR AREAS	O BR	1 BR	2 BR	3 BR	4 BR	Counties of FMR AREA within STATE
Johnson City-Kingsport-Bristol, TN-VA MSA	310	370	458	594	704	Carter, Hawkins, Sullivan, Unicoi, Washington
Knoxville, TN MSA	310	381	479	639	767	Anderson, Blount, Knox, Loudon, Sevier, Union
Memphis, TN-AR-MS MSA	396	462	542	753	791	Fayette, Shelby, Tipton
Nashville, TN MSA	434	520	641	873	979	Cheatham, Davidson, Dickson, Robertson, Rutherford Sumner, Williamson, Wilson

NONMETROPOLITAN COUNTIES	O BR	1 BR	2 BR	3 BR	4 BR	NONMETROPOLITAN COUNTIES	O BR	1 BR	2 BR	3 BR	4 BR
Bedford	240	309	378	476	529	Benton	259	295	355	468	524
Bledsoe	240	282	355	468	524	Bradley	240	303	404	547	665
Campbell	242	282	355	468	524	Cannon	240	282	355	468	524
Carroll	240	292	355	468	524	Claiborne	240	282	355	468	524
Clay	244	282	355	468	524	Cocke	240	282	355	468	524
Coffee	240	335	377	524	597	Crockett	240	282	355	468	524
Cumberland	253	282	369	514	524	Decatur	240	282	355	468	524
Dekalb	240	282	355	468	524	Dyer	300	304	405	507	632
Fentress	240	282	355	468	524	Franklin	251	282	355	489	575
Gibson	240	282	355	468	524	Giles	240	306	379	474	530
Grainger	244	282	355	468	524	Greene	240	282	355	468	524
Grundy	240	282	355	468	524	Hamblen	240	283	371	493	524
Hancock	240	282	355	468	524	Hardeman	240	282	355	468	524
Hardin	240	282	355	468	524	Haywood	252	293	391	489	547
Henderson	240	282	355	468	524	Henry	240	282	355	468	524
Hickman	284	288	382	503	534	Houston	240	282	355	468	524
Humphreys	240	293	355	468	524	Jackson	240	282	355	468	524
Jefferson	262	282	365	468	580	Johnson	240	282	355	468	524
Lake	240	282	355	468	524	Lauderdale	240	282	359	468	524
Lawrence	240	282	355	468	524	Lewis	240	282	355	468	524
Lincoln	240	282	360	468	524	Mcminn	240	282	355	470	524
Mcnairy	240	282	355	468	524	Macon	240	282	355	468	524
Marshall	283	308	401	507	564	Maury	344	351	468	586	653
Meigs	240	282	355	468	524	Monroe	240	282	355	468	524
Moore	240	282	355	468	524	Morgan	240	282	355	468	524
Obion	279	283	362	479	524	Overton	240	282	355	468	524
Perry	240	284	355	468	524	Pickett	240	282	355	468	524
Polk	240	282	355	468	524	Putnam	292	295	379	521	560
Rhea	240	300	355	473	524	Roane	259	282	355	478	575
Scott	240	282	355	468	524	Sequatchie	240	282	355	468	524
Smith	240	282	355	468	524	Stewart	240	282	355	468	524
Trousdale	240	295	392	492	644	Van Buren	240	282	355	468	524
Warren	267	282	364	468	524	Wayne	240	282	355	468	524

Note: The FMRS for unit sizes larger than 4 BRs are calculated by adding 15% to the 4 BR FMR for each extra bedroom. For example, the FMR for a 5 BR unit is 1.15 times the 4BR FMR, and the FMR for a 6 BR unit is 1.30 times the 4 BR FMR. 082900

SCHEDULE B - 40TH PERCENTILE FAIR MARKET RENTS FOR EXISTING HOUSING

T E N N E S S E E continued

NONMETROPOLITAN COUNTIES	O BR	1 BR	2 BR	3 BR	4 BR
Weakley	260	282	355	468	524
White	244	282	355	468	524

T E X A S

METROPOLITAN FMR AREAS	O BR	1 BR	2 BR	3 BR	4 BR	Counties of FMR AREA within STATE
Abilene, TX MSA	338	376	485	654	795	Taylor
Amarillo, TX MSA	286	361	449	626	738	Potter, Randall
Austin-San Marcos, TX MSA	509	615	819	1137	1344	Bastrop, Caldwell, Hays, Travis, Williamson
Beaumont-Port Arthur, TX MSA	326	394	480	636	673	Hardin, Jefferson, Orange
Brazoria, TX PMSA	473	527	658	917	1079	Brazoria
Brownsville-Harlingen-San Benito, TX MSA	300	378	472	591	738	Cameron
Bryan-College Station, TX MSA	381	443	560	781	921	Brazos
Corpus Christi, TX MSA	357	438	559	761	900	Nueces, San Patricio
Dallas, TX	529	609	781	1080	1277	Collin, Dallas, Denton, Ellis, Hunt, Kaufman, Rockwall
El Paso, TX MSA	402	451	534	739	877	El Paso
Fort Worth-Arlington, TX PMSA	452	491	637	889	1048	Hood, Johnson, Parker, Tarrant
Galveston-Texas City, TX PMSA	464	477	597	829	979	Galveston
Henderson County, TX	296	352	430	586	704	Henderson
Houston, TX PMSA	440	495	640	892	1051	Chambers, Fort Bend, Harris, Liberty, Montgomery, Waller
Killeen-Temple, TX MSA	401	418	529	735	808	Bell, Coryell
Laredo, TX MSA	325	374	491	614	691	Webb
Longview-Marshall, TX MSA	322	363	445	607	662	Gregg, Harrison, Upshur
Lubbock, TX MSA	308	390	506	704	780	Lubbock
Mc Allen-Edinburg-Mission, TX MSA	278	370	424	529	594	Hidalgo
Odessa-Midland, TX MSA	308	356	475	660	765	Ector, Midland
San Angelo, TX MSA	286	365	443	608	717	Tom Green
San Antonio, TX MSA	376	434	561	781	923	Bexar, Comal, Guadalupe, Wilson
Sherman-Denison, TX MSA	286	391	472	603	721	Grayson
Texarkana, TX-Texarkana, AR MSA	311	380	464	612	649	Bowie
Tyler, TX MSA	358	395	482	668	707	Smith
Victoria, TX MSA	354	358	452	627	707	Victoria
Waco, TX MSA	311	381	502	667	703	Mclennan
Wichita Falls, TX MSA	343	383	462	615	725	Archer, Wichita

Note: The FMRS for unit sizes larger than 4 BRs are calculated by adding 15% to the 4 BR FMR for each extra bedroom. For example, the FMR for a 5 BR unit is 1.15 times the 4BR FMR, and the FMR for a 6 BR unit is 1.30 times the 4 BR FMR. 082900

SCHEDULE B - 40TH PERCENTILE FAIR MARKET RENTS FOR EXISTING HOUSING PAGE 46

T E X A S continued

NONMETROPOLITAN COUNTIES	O BR	1 BR	2 BR	3 BR	4 BR
Anderson	333	375	420	585	591
Angelina	302	351	395	548	646
Armstrong	277	320	418	525	591
Austin	277	320	386	529	591
Bandera	297	320	386	525	591
Bee	277	320	386	518	591
Borden	277	320	386	518	591
Brewster	277	320	386	522	625
Brooks	277	320	386	518	591
Burleson	277	320	405	548	668
Calhoun	296	320	386	534	632
Camp	375	380	475	594	664
Cass	277	320	386	518	591
Cherokee	309	321	393	518	591
Clay	277	326	386	518	603
Coke	277	320	386	518	591
Collingsworth	277	320	386	518	591
Comanche	277	320	386	518	591
Cooke	300	320	406	552	613
Crane	277	320	386	518	591
Crosby	277	320	386	518	591
Dallam	277	320	386	518	591
Deaf Smith	277	320	386	518	601
Dewitt	277	320	386	518	591
Dimmit	277	320	386	518	591
Duval	277	320	386	518	591
Edwards	277	320	386	518	591
Falls	277	320	386	518	591
Fayette	277	320	386	518	591
Floyd	277	320	386	518	591
Franklin	277	320	386	534	591
Frio	277	320	386	518	591
Garza	277	320	386	518	591
Glasscock	277	320	386	518	591
Gonzales	277	320	386	518	591
Grimes	277	320	386	522	616
Hall	277	320	386	518	591
Hansford	277	320	386	518	607
Hartley	277	320	386	518	591
Hemphill	277	357	399	557	591

NONMETROPOLITAN COUNTIES	O BR	1 BR	2 BR	3 BR	4 BR
Andrews	277	320	386	518	591
Aransas	277	341	454	632	636
Atascosa	277	320	386	518	591
Bailey	277	320	386	518	591
Baylor	277	320	386	518	591
Blanco	277	320	408	569	600
Bosque	277	320	386	518	591
Briscoe	277	320	386	518	591
Brown	277	320	387	520	635
Burnet	352	407	501	696	814
Callahan	277	320	386	518	591
Carson	277	320	386	518	591
Castro	279	320	386	518	591
Childress	277	320	386	518	591
Cochran	277	320	386	518	591
Coleman	277	320	386	518	591
Colorado	277	320	386	518	591
Concho	277	320	386	518	591
Cottle	277	320	386	518	591
Crockett	277	320	386	518	591
Culberson	277	320	386	518	591
Dawson	277	320	386	518	591
Delta	277	332	386	518	591
Dickens	277	320	386	518	591
Donley	277	320	386	518	591
Eastland	277	320	386	518	591
Erath	287	325	420	544	591
Fannin	281	320	386	520	591
Fisher	277	320	386	518	591
Foard	277	320	386	518	591
Freestone	277	320	386	518	591
Gaines	283	320	386	518	591
Gillespie	277	349	452	622	634
Goliad	277	320	386	518	591
Gray	303	320	411	518	611
Hale	277	320	386	518	591
Hamilton	277	320	386	518	591
Hardeman	277	320	386	518	591
Haskell	277	320	386	518	591
Hill	277	320	386	518	591

Note: The FMRS for unit sizes larger than 4 BRs are calculated by adding 15% to the 4 BR FMR for each extra bedroom. For example, the FMR for a 5 BR unit is 1.15 times the 4BR FMR, and the FMR for a 6 BR unit is 1.30 times the 4 BR FMR. 082900

SCHEDULE B - 40TH PERCENTILE FAIR MARKET RENTS FOR EXISTING HOUSING

T E X A S continued

NONMETROPOLITAN COUNTIES	O BR	1 BR	2 BR	3 BR	4 BR
Hockley	283	330	386	523	591
Houston	277	320	386	518	591
Hudspeth	334	377	420	528	693
Irion	277	320	386	518	591
Jackson	277	321	386	518	591
Jeff Davis	277	320	386	518	591
Jim Wells	277	320	386	518	599
Karnes	277	320	386	518	591
Kenedy	277	320	386	518	591
Kerr	277	359	448	624	736
King	277	320	386	518	591
Kleberg	337	349	425	594	699
Lamar	277	344	404	565	668
Lampasas	277	320	386	525	620
Lavaca	277	320	386	518	591
Leon	277	356	398	518	656
Lipscomb	277	320	386	518	591
Llano	277	357	475	595	780
Lynn	277	320	386	518	591
Mcmullen	277	320	386	518	591
Marion	277	320	386	518	613
Mason	277	320	386	518	591
Maverick	277	320	386	518	591
Menard	277	320	386	518	591
Mills	277	320	386	518	591
Montague	277	320	386	518	591
Morris	277	320	386	518	591
Nacogdoches	292	353	457	571	675
Newton	277	320	386	518	591
Ochiltree	277	320	386	518	591
Palo Pinto	277	320	386	518	615
Parmer	277	320	386	518	591
Polk	309	338	393	529	642
Rains	277	359	434	602	607
Real	277	320	386	518	591
Reeves	277	320	386	518	591
Roberts	277	323	386	518	591
Runnels	277	320	386	518	591
Sabine	277	320	386	518	591
San Jacinto	290	327	386	518	605

NONMETROPOLITAN COUNTIES	O BR	1 BR	2 BR	3 BR	4 BR
Hopkins	323	348	408	569	613
Howard	295	320	386	522	591
Hutchinson	277	320	399	557	658
Jack	277	320	386	518	591
Jasper	277	320	394	525	644
Jim Hogg	277	320	386	518	591
Jones	277	320	386	518	591
Kendall	277	404	454	632	747
Kent	277	320	386	518	591
Kimble	277	320	420	527	591
Kinney	277	320	386	518	591
Knox	277	320	386	518	591
Lamb	277	320	386	518	591
La Salle	277	320	386	518	591
Lee	314	353	396	553	621
Limestone	277	320	386	518	591
Live Oak	277	320	386	518	591
Loving	277	320	386	518	591
Mcculloch	285	320	386	518	591
Madison	277	329	386	518	609
Martin	277	320	386	518	591
Matagorda	320	350	434	602	607
Medina	277	320	386	518	591
Milam	277	320	386	518	591
Mitchell	277	320	386	518	591
Moore	277	325	386	518	601
Motley	277	320	386	518	591
Navarro	332	349	419	532	591
Nolan	285	320	386	518	591
Oldham	277	320	418	525	614
Panola	277	326	386	518	591
Pecos	277	320	386	522	616
Presidio	277	320	386	518	591
Reagan	353	359	477	599	783
Red River	277	357	399	518	591
Refugio	277	320	386	518	591
Robertson	277	367	409	518	591
Rusk	289	320	386	518	591
San Augustine	277	320	386	518	591
San Saba	277	320	386	518	591

Note: The FMRS for unit sizes larger than 4 BRs are calculated by adding 15% to the 4 BR FMR for each extra bedroom. For example, the FMR for a 5 BR unit is 1.15 times the 4BR FMR, and the FMR for a 6 BR unit is 1.30 times the 4 BR FMR. 082900

SCHEDULE B - 40TH PERCENTILE FAIR MARKET RENTS FOR EXISTING HOUSING PAGE 48

T E X A S continued

NONMETROPOLITAN COUNTIES	O BR	1 BR	2 BR	3 BR	4 BR
Schleicher	277	320	386	518	591
Shackelford	277	320	386	518	591
Sherman	277	320	386	518	591
Starr	277	320	386	518	591
Sterling	277	320	386	518	591
Sutton	277	320	386	518	591
Terrell	277	320	386	518	591
Throckmorton	277	320	386	518	591
Trinity	288	325	386	518	591
Upton	277	320	386	518	591
Val Verde	277	368	433	540	637
Walker	374	397	486	645	681
Washington	344	351	469	585	769
Wheeler	277	320	386	518	591
Willacy	277	320	386	518	591
Wise	277	323	388	541	591
Yoakum	277	365	448	560	736
Zapata	277	320	386	518	591

NONMETROPOLITAN COUNTIES	O BR	1 BR	2 BR	3 BR	4 BR
Scurry	277	320	400	559	660
Shelby	277	320	386	518	591
Somervell	317	357	399	548	591
Stephens	277	320	386	518	591
Stonewall	277	320	386	518	591
Swisher	277	320	386	518	591
Terry	277	320	386	518	591
Titus	294	366	414	572	591
Tyler	277	320	412	518	679
Uvalde	277	320	386	518	591
Van Zandt	296	320	400	546	660
Ward	277	320	386	518	591
Wharton	277	320	386	518	591
Wilbarger	277	320	386	518	610
Winkler	277	320	386	518	591
Wood	277	320	399	557	658
Young	277	320	386	518	599
Zavala	277	320	386	518	591

U T A H

METROPOLITAN FMR AREAS	O BR	1 BR	2 BR	3 BR	4 BR	Counties of FMR AREA within STATE
Kane County, UT	318	391	489	655	788	Kane
Provo-Orem, UT MSA	440	464	574	796	941	Utah
Salt Lake City-Ogden, UT MSA	449	520	660	918	1076	Davis, Salt Lake, Weber

NONMETROPOLITAN COUNTIES	O BR	1 BR	2 BR	3 BR	4 BR
Beaver	301	368	461	617	742
Cache	335	412	516	690	830
Daggett	327	447	593	744	833
Emery	301	368	461	617	742
Grand	301	368	461	617	742
Juab	301	368	461	617	742
Morgan	301	368	461	617	742
Rich	301	368	461	617	742
Sanpete	301	368	461	617	742
Summit	445	549	685	924	1124
Uintah	301	368	461	617	742
Washington	370	456	605	809	990

NONMETROPOLITAN COUNTIES	O BR	1 BR	2 BR	3 BR	4 BR
Box Elder	335	371	465	622	750
Carbon	323	368	461	617	742
Duchesne	301	368	461	617	742
Garfield	301	368	461	617	742
Iron	307	418	520	651	765
Millard	301	368	461	617	742
Piute	301	368	461	617	742
San Juan	301	368	461	617	742
Sevier	305	368	461	617	742
Tooele	301	382	461	617	742
Wasatch	301	382	461	617	742
Wayne	301	368	461	617	742

Note: The FMRS for unit sizes larger than 4 BRs are calculated by adding 15% to the 4 BR FMR for each extra bedroom. For example, the FMR for a 5 BR unit is 1.15 times the 4BR FMR, and the FMR for a 6 BR unit is 1.30 times the 4 BR FMR. 082900

SCHEDULE B - 40TH PERCENTILE FAIR MARKET RENTS FOR EXISTING HOUSING

V E R M O N T

METROPOLITAN FMR AREAS	O BR	1 BR	2 BR	3 BR	4 BR	Components of FMR AREA within STATE
Burlington, VT MSA	482	590	788	1074	1296	Chittenden county towns of Burlington city Charlotte town, Colchester town, Essex town Hinesburg town, Jericho town, Milton town, Richmond town St. George town, Shelburne town, South Burlington c Williston town, Winooski city Franklin county towns of Fairfax town, Georgia town St. Albans city, St. Albans town, Swanton town Grand Isle county towns of Grand Isle town South Hero town

NONMETROPOLITAN COUNTIES	O BR	1 BR	2 BR	3 BR	4 BR	Towns within non metropolitan counties
Addison	426	514	598	834	935	
Bennington	385	486	625	794	926	
Caledonia	371	444	541	682	782	
Chittenden	392	632	713	991	1168	Bolton town, Buels gore, Huntington town, Underhill town Westford town
Essex	354	427	528	665	763	
Franklin	426	483	592	751	863	Bakersfield town, Berkshire town, Enosburg town Fairfield town, Fletcher town, Franklin town Highgate town, Montgomery town, Richford town Sheldon town
Grand Isle	367	442	547	689	791	Alburg town, Isle La Motte town, North Hero town
Lamoille	340	473	564	772	885	
Orange	353	463	571	754	845	
Orleans	328	395	489	616	707	
Rutland	390	505	617	774	866	
Washington	366	454	613	767	860	
Windham	422	488	648	822	905	
Windsor	454	514	642	825	977	

V I R G I N I A

METROPOLITAN FMR AREAS	O BR	1 BR	2 BR	3 BR	4 BR	Counties of FMR AREA within STATE
Charlottesville, VA MSA	434	513	656	872	977	Albemarle, Fluvanna, Greene, Charlottesville city
Clarke County, VA	321	453	586	805	821	Clarke
Culpeper County, VA	388	566	658	870	1042	Culpeper
Danville, VA MSA	296	373	438	588	709	Pittsylvania, Danville city
Johnson City-Kingsport-Bristol, TN-VA MSA	310	370	458	594	704	Scott, Washington, Bristol city
King George County, VA	389	517	581	807	813	King George
Lynchburg, VA MSA	352	388	447	588	709	Amherst, Bedford, Campbell, Bedford city, Lynchburg city
Norfolk-Virginia Beach-Newport News, VA-NC MSA	440	496	586	817	960	Gloucester, Isle of Wight, James City, Mathews, York Chesapeake city, Hampton city, Newport News city Norfolk city, Poquoson city, Portsmouth city

Note: The FMRS for unit sizes larger than 4 BRs are calculated by adding 15% to the 4 BR FMR for each extra bedroom. For example, the FMR for a 5 BR unit is 1.15 times the 4BR FMR, and the FMR for a 6 BR unit is 1.30 times the 4 BR FMR. 082900

SCHEDULE B - 40TH PERCENTILE FAIR MARKET RENTS FOR EXISTING HOUSING PAGE 50

V I R G I N I A continued

METROPOLITAN FMR AREAS	O BR	1 BR	2 BR	3 BR	4 BR	Counties of FMR AREA within STATE
Richmond-Petersburg, VA MSA	479	542	631	878	1036	Suffolk city, Virginia Beach city, Williamsburg city Charles City, Chesterfield, Dinwiddie, Goochland, Hanover Henrico, New Kent, Powhatan, Prince George Colonial Heights city, Hopewell city, Petersburg city Richmond city
Roanoke, VA MSA	298	373	484	621	773	Botetourt, Roanoke, Roanoke city, Salem city
Warren County, VA	314	430	573	751	938	Warren
Washington, DC-MD-VA	647	735	863	1176	1418	Arlington, Fairfax, Loudoun, Prince William, Spotsylvania Stafford, Alexandria city, Fairfax city Falls Church city, Fauquier, Fredericksburg city Manassas city, Manassas Park city

NONMETROPOLITAN COUNTIES	O BR	1 BR	2 BR	3 BR	4 BR	NONMETROPOLITAN COUNTIES	O BR	1 BR	2 BR	3 BR	4 BR
Accomack	343	371	433	575	693	Alleghany	301	365	428	575	693
Amelia	289	365	428	575	693	Appomattox	289	365	428	575	693
Augusta	289	375	455	599	729	Bath	289	365	428	575	693
Bland	289	365	428	575	693	Brunswick	289	365	428	575	693
Buchanan	289	365	428	575	693	Buckingham	289	365	428	575	693
Caroline	410	415	555	736	776	Carroll	289	365	428	575	693
Charlotte	289	365	428	575	693	Craig	289	365	428	575	693
Cumberland	289	397	460	575	693	Dickenson	289	365	428	575	693
Essex	289	407	480	669	789	Floyd	289	365	428	575	693
Franklin	289	365	428	575	693	Frederick	393	453	545	746	893
Giles	289	365	428	575	693	Grayson	289	365	428	575	693
Greensville	289	375	428	575	693	Halifax	289	365	428	575	693
Henry	289	365	428	575	693	Highland	289	365	428	575	693
King and Queen	289	415	467	584	693	King William	289	397	444	575	693
Lancaster	362	406	458	610	743	Lee	289	365	428	575	693
Louisa	289	377	464	645	693	Lunenburg	289	365	428	575	693
Madison	290	431	485	608	796	Mecklenburg	289	365	428	575	693
Middlesex	289	367	428	575	693	Montgomery	297	391	459	637	754
Nelson	289	365	428	575	693	Northampton	289	365	428	575	693
Northumberland	289	365	428	575	693	Nottoway	289	365	428	575	693
Orange	321	436	584	813	954	Page	336	379	428	575	693
Patrick	289	365	428	575	693	Prince Edward	324	367	428	575	693
Pulaski	289	365	428	575	693	Rappahannock	293	475	535	742	875
Richmond	289	386	432	575	710	Rockbridge	289	365	428	575	693
Rockingham	289	401	507	695	815	Russell	289	365	428	575	693
Shenandoah	381	391	481	667	757	Smyth	289	365	428	575	693
Southampton	289	365	428	575	693	Surry	300	365	428	575	693
Sussex	289	365	428	575	693	Tazewell	289	365	428	575	693

Note: The FMRS for unit sizes larger than 4 BRs are calculated by adding 15% to the 4 BR FMR for each extra bedroom. For example, the FMR for a 5 BR unit is 1.15 times the 4BR FMR, and the FMR for a 6 BR unit is 1.30 times the 4 BR FMR. 082900

SCHEDULE B - 40TH PERCENTILE FAIR MARKET RENTS FOR EXISTING HOUSING

V I R G I N I A continued

NONMETROPOLITAN COUNTIES	O BR	1 BR	2 BR	3 BR	4 BR
Westmoreland	289	391	519	653	845
Wythe	302	365	428	575	693
Wise	289	365	428	575	693

W A S H I N G T O N

METROPOLITAN FMR AREAS	O BR	1 BR	2 BR	3 BR	4 BR	Counties of FMR AREA within STATE
Bellingham, WA MSA	401	520	692	956	1133	Whatcom
Bremerton, WA PMSA	454	524	679	917	1115	Kitsap
Olympia, WA PMSA	467	573	716	985	1162	Thurston
Portland-Vancouver, OR-WA PMSA	481	592	730	1015	1102	Clark
Richland-Kennewick-Pasco, WA MSA	500	572	685	954	1119	Benton, Franklin
Seattle-Bellevue-Everett, WA PMSA	525	639	809	1123	1327	Island, King, Snohomish
Spokane, WA MSA	321	436	527	716	801	Spokane
Tacoma, WA PMSA	404	482	642	893	1009	Pierce
Yakima, WA MSA	361	444	551	739	771	Yakima

NONMETROPOLITAN COUNTIES	O BR	1 BR	2 BR	3 BR	4 BR
Adams	319	382	497	656	728
Chelan	319	382	497	656	728
Columbia	319	382	497	656	728
Douglas	373	394	497	656	728
Garfield	319	382	497	656	728
Grays Harbor	326	382	502	677	781
Kittitas	319	382	497	656	728
Lewis	319	382	497	656	728
Mason	362	449	552	726	781
Pacific	319	382	497	656	728
San Juan	394	538	717	945	1125
Skamania	319	382	497	656	728
Wahkiakum	319	382	497	656	728
Whitman	344	391	521	723	857
Asotin	319	382	497	656	728
Clallam	372	460	585	753	823
Cowlitz	358	400	516	716	728
Ferry	319	382	497	656	728
Grant	343	382	497	656	728
Jefferson	319	412	507	687	728
Klickitat	319	382	497	656	728
Lincoln	319	382	497	656	728
Okanogan	319	382	497	656	728
Pend Oreille	319	382	497	656	873
Skagit	435	531	627	783	875
Stevens	319	382	497	656	728
Walla Walla	319	382	497	665	786

W E S T V I R G I N I A

METROPOLITAN FMR AREAS	O BR	1 BR	2 BR	3 BR	4 BR	Counties of FMR AREA within STATE
Berkeley County, WV	422	451	531	663	745	Berkeley
Charleston, WV MSA	290	393	499	685	749	Kanawha, Putnam
Cumberland, MD-WV MSA	340	409	506	668	763	Mineral
Huntington-Ashland, WV-KY-OH MSA	307	360	444	566	624	Cabell, Wayne
Jefferson County, WV	427	473	586	762	863	Jefferson

Note: The FMRS for unit sizes larger than 4 BRs are calculated by adding 15% to the 4 BR FMR for each extra bedroom. For example, the FMR for a 5 BR unit is 1.15 times the 4BR FMR, and the FMR for a 6 BR unit is 1.30 times the 4 BR FMR.

082900

SCHEDULE B - 40TH PERCENTILE FAIR MARKET RENTS FOR EXISTING HOUSING PAGE 52

W E S T V I R G I N I A continued

METROPOLITAN FMR AREAS	O BR	1 BR	2 BR	3 BR	4 BR	Counties of FMR AREA within STATE
Parkersburg-Marietta, WV-OH MSA	309	371	424	550	597	Wood
Steubenville-Weirton, OH-WV MSA	292	344	431	549	613	Brooke, Hancock
Wheeling, WV-OH MSA	318	349	431	549	613	Marshall, Ohio

NONMETROPOLITAN COUNTIES	O BR	1 BR	2 BR	3 BR	4 BR
Barbour	257	326	365	469	546
Braxton	257	313	365	469	546
Clay	257	313	365	469	546
Fayette	257	313	365	469	546
Grant	257	313	365	469	546
Hampshire	257	313	367	482	546
Harrison	282	347	401	500	600
Lewis	257	343	365	469	546
Logan	263	313	365	472	559
Marion	257	324	400	512	591
Mercer	257	313	365	469	546
Monongalia	323	358	435	600	709
Morgan	349	394	441	554	617
Pendleton	257	313	365	469	546
Pocahontas	257	313	365	469	546
Raleigh	296	349	407	524	613
Ritchie	257	313	365	469	546
Summers	257	313	365	469	546
Tucker	257	313	365	469	546
Upshur	257	313	367	469	546
Wetzel	290	313	394	491	620
Wyoming	257	313	365	469	546

NONMETROPOLITAN COUNTIES	O BR	1 BR	2 BR	3 BR	4 BR
Boone	257	313	365	469	546
Calhoun	257	313	365	469	546
Doddridge	266	313	365	469	546
Gilmer	282	313	365	469	546
Greenbrier	257	354	378	471	546
Hardy	257	313	365	469	546
Jackson	257	321	365	499	546
Lincoln	257	313	365	469	546
Mcdowell	257	313	365	469	546
Mason	257	313	365	469	561
Mingo	257	313	365	469	553
Monroe	257	313	365	469	546
Nicholas	257	313	365	469	546
Pleasants	265	313	365	469	560
Preston	257	329	365	469	546
Randolph	257	313	365	469	546
Roane	257	313	365	469	546
Taylor	314	339	371	469	546
Tyler	257	313	384	480	546
Webster	257	313	365	469	546
Wirt	257	313	365	469	546

W I S C O N S I N

METROPOLITAN FMR AREAS	O BR	1 BR	2 BR	3 BR	4 BR	Counties of FMR AREA within STATE
Appleton-Oshkosh-Neenah, WI MSA	325	400	509	641	740	Calumet, Outagamie, Winnebago
Duluth-Superior, MN-WI MSA	285	367	471	629	733	Douglas
Eau Claire, WI MSA	351	382	501	642	723	Chippewa, Eau Claire
Green Bay, WI MSA	385	424	544	756	760	Brown
Janesville-Beloit, WI MSA	358	452	559	700	785	Rock
Kenosha, WI PMSA	403	500	614	844	950	Kenosha
La Crosse, WI-MN MSA	289	372	473	633	767	La Crosse
Madison, WI MSA	445	559	676	938	1107	Dane

Note: The FMRS for unit sizes larger than 4 BRs are calculated by adding 15% to the 4 BR FMR for each extra bedroom. For example, the FMR for a 5 BR unit is 1.15 times the 4BR FMR, and the FMR for a 6 BR unit is 1.30 times the 4 BR FMR. 082900

SCHEDULE B - 40TH PERCENTILE FAIR MARKET RENTS FOR EXISTING HOUSING

W I S C O N S I N continued

METROPOLITAN FMR AREAS	0 BR	1 BR	2 BR	3 BR	4 BR	Counties of FMR AREA within STATE
Milwaukee-Waukesha, WI PMSA	386	504	633	794	887	Milwaukee, Ozaukee, Washington, Waukesha
Minneapolis-St. Paul, MN-WI MSA	427	549	702	950	1076	Pierce, St. Croix
Racine, WI PMSA	343	425	561	724	792	Racine
Sheboygan, WI MSA	310	399	487	609	756	Sheboygan
Wausau, WI MSA	381	394	492	672	745	Marathon

NONMETROPOLITAN COUNTIES	0 BR	1 BR	2 BR	3 BR	4 BR
Adams	279	326	415	529	597
Barron	279	326	415	529	597
Buffalo	279	326	415	529	597
Clark	279	326	415	529	597
Crawford	279	326	415	529	597
Door	279	346	429	552	670
Florence	279	326	415	529	597
Forest	279	326	415	529	597
Green	284	326	415	558	597
Iowa	289	326	415	545	597
Jackson	279	326	415	529	597
Juneau	285	326	415	529	597
Lafayette	284	326	415	529	597
Lincoln	279	326	415	529	597
Marinette	279	326	415	529	597
Menominee	279	326	415	529	597
Oconto	279	326	415	529	597
Pepin	279	326	415	529	597
Portage	340	359	465	581	718
Richland	279	326	415	529	597
Sauk	327	338	450	561	629
Shawano	284	326	415	529	597
Trempealeau	279	326	415	529	597
Vilas	279	326	415	529	597
Washburn	279	326	415	529	597
Waushara	279	326	415	529	597

NONMETROPOLITAN COUNTIES	0 BR	1 BR	2 BR	3 BR	4 BR
Ashland	304	338	415	529	597
Bayfield	279	326	415	529	597
Burnett	279	326	415	529	597
Columbia	279	332	436	571	641
Dodge	354	359	471	591	659
Dunn	279	326	426	569	703
Fond du Lac	324	439	520	707	729
Grant	283	326	415	529	597
Green Lake	279	326	415	529	597
Iron	279	326	415	529	597
Jefferson	279	370	480	621	679
Kewaunee	279	326	415	529	597
Langlade	279	326	415	529	597
Manitowoc	282	326	415	529	597
Marquette	279	326	415	529	597
Monroe	279	326	415	553	597
Oneida	279	327	415	533	639
Polk	279	326	422	529	597
Price	279	326	415	529	597
Rusk	279	326	415	529	597
Sawyer	279	326	415	529	597
Taylor	279	326	415	529	597
Vernon	279	326	415	529	597
Walworth	291	410	532	693	779
Waupaca	279	326	415	529	627
Wood	302	347	430	539	606

Note: The FMRS for unit sizes larger than 4 BRs are calculated by adding 15% to the 4 BR FMR for each extra bedroom. For example, the FMR for a 5 BR unit is 1.15 times the 4BR FMR, and the FMR for a 6 BR unit is 1.30 times the 4 BR FMR.

082900

SCHEDULE B - 40TH PERCENTILE FAIR MARKET RENTS FOR EXISTING HOUSING

W Y O M I N G

METROPOLITAN FMR AREAS	O BR	1 BR	2 BR	3 BR	4 BR	Counties of FMR AREA within STATE
Casper, WY MSA	328	381	487	667	788	Natrona
Cheyenne, WY MSA	371	465	621	794	964	Laramie

NONMETROPOLITAN COUNTIES	O BR	1 BR	2 BR	3 BR	4 BR
Albany	311	389	519	721	852
Campbell	320	340	436	580	685
Converse	296	340	436	578	665
Fremont	296	340	436	578	665
Hot Springs	296	340	436	578	665
Lincoln	296	340	436	578	665
Park	296	340	436	578	672
Sheridan	296	340	436	578	672
Sweetwater	308	340	436	580	685
Uinta	310	340	436	579	700
Weston	296	340	436	578	665

NONMETROPOLITAN COUNTIES	O BR	1 BR	2 BR	3 BR	4 BR
Big Horn	296	340	436	578	665
Carbon	296	340	436	578	665
Crook	296	340	436	578	665
Goshen	296	340	436	578	665
Johnson	296	340	436	578	665
Niobrara	296	340	436	578	665
Platte	296	340	436	578	665
Sublette	329	370	436	578	665
Teton	394	502	667	897	978
Washakie	296	340	436	578	665

P A C I F I C I S L A N D S

NONMETROPOLITAN COUNTIES	O BR	1 BR	2 BR	3 BR	4 BR
Pacific Islands	691	830	983	1232	1386

NONMETROPOLITAN COUNTIES O BR 1 BR 2 BR 3 BR 4 BR

P U E R T O R I C O

METROPOLITAN FMR AREAS	O BR	1 BR	2 BR	3 BR	4 BR	Counties of FMR AREA within STATE
Aguadilla, PR MSA	215	261	311	386	435	Aguada Municipio, Aguadilla Municipio, Moca Municipio
Arecibo, PR PMSA	232	282	331	415	467	Arecibo Municipio, Camuy Municipio, Hatillo Municipio
Caguas, PR PMSA	272	326	385	485	539	Caguas Municipio, Cayey Municipio, Cidra Municipio Gurabo Municipio, San Lorenzo Municipio
Mayaguez, PR MSA	255	311	369	459	517	Anasco Municipio, Cabo Rojo Municipio Hormigueros Municipio, Mayaguez Municipio Sabana Grande Municipio, San German Municipio
Ponce, PR MSA	253	310	365	457	513	Guayanilla Municipio, Juana Diaz Municipio Penuelas Municipio, Ponce Municipio, Villalba Municipio Yauco Municipio
San Juan-Bayamon, PR PMSA	341	416	491	614	690	Aguas Buenas Municipio, Barceloneta Municipio Bayamon Municipio, Canovanas Municipio Carolina Municipio, Catano Municipio, Ceiba Municipio Comerio Municipio, Corozal Municipio, Dorado Municipio Fajardo Municipio, Florida Municipio, Guaynabo Municipio Humacao Municipio, Juncos Municipio Las Piedras Municipio, Loiza Municipio Luquillo Municipio, Manati Municipio, Morovis Municipio

Note: The FMRS for unit sizes larger than 4 BRs are calculated by adding 15% to the 4 BR FMR for each extra bedroom. For example, the FMR for a 5 BR unit is 1.15 times the 4BR FMR, and the FMR for a 6 BR unit is 1.30 times the 4 BR FMR. 082900

SCHEDULE B - 40TH PERCENTILE FAIR MARKET RENTS FOR EXISTING HOUSING

P U E R T O R I C O continued

METROPOLITAN FMR AREAS	O BR	1 BR	2 BR	3 BR	4 BR	Counties of FMR AREA within STATE
						Naguabo Municipio, Naranjito Municipio Rio Grande Municipio, San Juan Municipio Toa Alta Municipio, Toa Baja Municipio Trujillo Alto Municipio, Vega Alta Municipio Vega Baja Municipio, Yabucoa Municipio

NONMETROPOLITAN COUNTIES	O BR	1 BR	2 BR	3 BR	4 BR
Adjuntas Municipio.....	202	249	292	369	408
Arroyo Municipio.....	202	249	292	369	408
Ciales Municipio.....	202	249	292	369	408
Culebra Municipio.....	202	249	292	369	408
Guayama Municipio.....	202	249	292	369	408
Jayuya Municipio.....	202	249	292	369	408
Lares Municipio.....	202	249	292	369	408
Maricao Municipio.....	202	249	292	369	408
Orocovis Municipio.....	202	249	292	369	408
Quebradillas Municipio..	202	249	292	369	408
Salinas Municipio.....	202	249	292	369	408
Santa Isabel Municipio..	202	249	292	369	408
Vieques Municipio.....	202	249	292	369	408

NONMETROPOLITAN COUNTIES	O BR	1 BR	2 BR	3 BR	4 BR
Aibonito Municipio.....	202	249	292	369	408
Barranquitas Municipio..	202	249	292	369	408
Coamo Municipio.....	202	249	292	369	408
Guanica Municipio.....	202	249	292	369	408
Isabela Municipio.....	202	249	292	369	408
Lajas Municipio.....	202	249	292	369	408
Las Marias Municipio....	202	249	292	369	408
Maunabo Municipio.....	202	249	292	369	408
Patillas Municipio.....	202	249	292	369	408
Rincon Municipio.....	202	249	292	369	408
San Sebastian Municipio.	202	249	292	369	408
Utuado Municipio.....	202	249	292	369	408

V I R G I N I S L A N D S

NONMETROPOLITAN COUNTIES	O BR	1 BR	2 BR	3 BR	4 BR
St. Croix.....	482	585	690	861	965

NONMETROPOLITAN COUNTIES	O BR	1 BR	2 BR	3 BR	4 BR
St. Johns/St. Thomas....	619	750	884	1105	1237

Note: The FMRS for unit sizes larger than 4 BRs are calculated by adding 15% to the 4 BR FMR for each extra bedroom. For example, the FMR for a 5 BR unit is 1.15 times the 4BR FMR, and the FMR for a 6 BR unit is 1.30 times the 4 BR FMR. 082900

Schedule D: FY 2001 40th Percentile Fair Market Rents
For Manufactured Home Spaces in the Section 8 Housing Choice Voucher Program

Area Name	Space Rent
California	
Los Angeles, CA	$392
Orange County, CA	$479
Riverside-San Bernardino, CA	$310
San Diego, CA	$441
San Jose, CA	$524
Vallejo-Fairfield-Napa, CA	$366
Colorado	
Boulder-Longmont, CO	$362
Denver, CO	$344
Maryland	
Hagerstown, MD	$222
Nevada	
Reno, NV	$392
New York	
Dutchess County, NY	$383
Newburgh, NY-PA	$350
Rochester, NY	$246
Utica-Rome, NY	$221
Oregon	
Portland-Vancouver, OR-WA	$296
Deschutes County, OR	$261

[FR Doc. 00–24333 Filed 9–22–00; 8:45 am]
BILLING CODE 4210–62–C

Federal Register

Monday,
September 25, 2000

Part III

The President

Notice of September 22, 2000—Continuation of Emergency With Respect to UNITA

Federal Register
Vol. 65, No. 186
Monday, September 25, 2000

Presidential Documents

Title 3—

The President

Notice of September 22, 2000

Continuation of Emergency With Respect to UNITA

On September 26, 1993, by Executive Order 12865, I declared a national emergency to deal with the unusual and extraordinary threat to the foreign policy of the United States constituted by the actions and policies of the National Union for the Total Independence of Angola (UNITA), prohibiting the sale or supply by United States persons or from the United States, or using U.S. registered vessels or aircraft, of arms, related materiel of all types, petroleum, and petroleum products to the territory of Angola, other than through designated points of entry. The order also prohibits the sale or supply of such commodities to UNITA. On December 12, 1997, in order to take additional steps with respect to the national emergency declared in Executive Order 12865, I issued Executive Order 13069, closing all UNITA offices in the United States and imposing additional sanctions with regard to the sale or supply of aircraft or aircraft parts, the granting of take-off, landing and overflight permission, and the provision of certain aircraft-related services. On August 18, 1998, in order to take further steps with respect to the national emergency declared in Executive Order 12865, I issued Executive Order 13098, blocking all property and interests in property of UNITA and designated UNITA officials and adult members of their immediate families, prohibiting the importation of certain diamonds exported from Angola, and imposing additional sanctions with regard to the sale or supply of equipment used in mining, motorized vehicles, watercraft, spare parts for motorized vehicles or watercraft, mining services, and ground or waterborne transportation services.

Because of our continuing international obligations and because of the prejudicial effect that discontinuation of the sanctions would have on prospects for peace in Angola, the national emergency declared on September 26, 1993, and the measures adopted pursuant thereto to deal with that emergency, must continue in effect beyond September 26, 2000. Therefore, in accordance with section 202(d) of the National Emergencies Act (50 U.S.C. 1622(d)), I am continuing the national emergency with respect to UNITA.

This notice shall be published in the **Federal Register** and transmitted to the Congress.

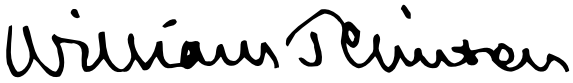

THE WHITE HOUSE,
September 22, 2000.

[FR Doc. 00–24800
Filed 9–22–00; 1:09 pm]
Billing code 3195–01–P

Reader Aids

Federal Register

Vol. 65, No. 186

Monday, September 25, 2000

CUSTOMER SERVICE AND INFORMATION

Federal Register/Code of Federal Regulations

General Information, indexes and other finding aids	**202–523–5227**
Laws	**523–5227**

Presidential Documents

Executive orders and proclamations	**523–5227**
The United States Government Manual	**523–5227**

Other Services

Electronic and on-line services (voice)	**523–4534**
Privacy Act Compilation	**523–3187**
Public Laws Update Service (numbers, dates, etc.)	**523–6641**
TTY for the deaf-and-hard-of-hearing	**523–5229**

ELECTRONIC RESEARCH

World Wide Web

Full text of the daily Federal Register, CFR and other publications:

http://www.access.gpo.gov/nara

Federal Register information and research tools, including Public Inspection List, indexes, and links to GPO Access:

http://www.nara.gov/fedreg

E-mail

PENS (Public Law Electronic Notification Service) is an E-mail service for notification of recently enacted Public Laws. To subscribe, send E-mail to

listserv@www.gsa.gov

with the text message:

subscribe PUBLAWS-L your name

Use listserv@www.gsa.gov only to subscribe or unsubscribe to PENS. We cannot respond to specific inquiries.

Reference questions. Send questions and comments about the Federal Register system to:

info@fedreg.nara.gov

The Federal Register staff cannot interpret specific documents or regulations.

FEDERAL REGISTER PAGES AND DATE, SEPTEMBER

53157–53522 1
53523–53888 5
53889–54138 6
54139–54396 7
54397–54740 8
54741–54942 11
54943–55168 12
55169–55430 13
55431–55884 14
55885–56208 15
56209–56456 18
56457–56772 19
56773–57080 20
57081–57276 21
57277–57536 22
57537–57722 25

CFR PARTS AFFECTED DURING SEPTEMBER

At the end of each month, the Office of the Federal Register publishes separately a List of CFR Sections Affected (LSA), which lists parts and sections affected by documents published since the revision date of each title.

3 CFR

Administrative Orders:

Memorandums:
September 11, 2000 56209

Presidential Determinations:
Presidential Determination No. 99–36 of September 10, 1999 (see Presidential Determination No. 2000–29 of September 12, 2000) No. 00–29 of September 12, 2000 55883
Notice of September 22, 2000 57721

Proclamations:
7336 53887
7337 54397
7338 56457
7339 56459
7340 56761
7341 56767
7342 56769
7343 56771

Executive Orders:
5327 (Revoked in part by PLO 7461) 54297
13147 (Amended by EO 13167) 57079
13167 57079
12865 (See Notice of September 22, 2000) 57721
13069 (See Notice of September 22, 2000) 57721
13098 (See Notice of September 22, 2000) 57721

5 CFR

532 55431
2635 55076

Proposed Rules:
2635 53650
2640 53942

7 CFR

246 53523
301 .....53528, 54139, 54741, 54943, 55431, 57537
457 56773
657 57537
905 .....55885, 57538
920 54945
927 53531
929 55436
944 54945
1735 54399

Proposed Rules:
6 57562
226 55102
319 56803
457 57562
932 54818
983 53652
1218 57104
1940 55784
1945 54973

8 CFR

204 53889
214 56463
245 53889

9 CFR

94 56774
98 56775
318 53531
381 53531

Proposed Rules:
71 57106
75 56807
85 57106
206 53653
317 56262
381 56262
390 56503

10 CFR

1 54948
2 54948
19 54948
30 54948
40 54948
50 54948
51 54948
70 .....54948, 56211
72 53533
430 56740

12 CFR

612 54742
614 54742
702 55439
709 55439
747 57277
1710 55169

Proposed Rules:
32 57292
741 55464

13 CFR

121 53533
124 57541
134 57541

14 CFR

23 .....55848, 56779
25 .....55443, 55848
33 55848
39 .....53157, 53158, 53161,

53897, 54140, 54143, 54145, 54403, 54407, 54409, 54743, 55175, 55449, 55450, 55452, 55453, 55457, 55891, 56231, 56233, 56236, 56780, 56783, 56785, 57280, 57282
71 .....53558, 54950, 54952, 54953, 55076, 56239, 56240, 56466, 56468, 56788, 57081, 57285, 57542, 57543
95.....54744
97 .....55458, 57081, 57087
121.....56192
125.....56192
135.....56192
145.....56192
400.....56618
401.....56618
404.....56618
405.....56618
406.....56618
413.....56618
415.....56618
431.....56618
433.....56618
435.....56618
450.....56670
Proposed Rules:
23.....56809
25.....56992, 57564
39 .....53199, 53201, 53203, 53205, 53206, 54182, 54184, 54445, 54820, 54823, 54981, 55466, 55468, 55470, 56264, 56266, 56268, 56270, 56273, 56275, 56276, 56506, 56507, 56509, 56811, 56814, 56817, 56819, 57113, 57296, 57298
71 .....54824, 54825, 57116, 57300, 57567, 57568, 57569, 57571, 57572, 57573, 57574, 57576
91.....56992
121.....56992
125.....56992
135.....56992

15 CFR

738.....55177
742.....55177
746.....55177
774.....55177
960.....56241
Proposed Rules:
801.....57117, 57119
806.....57121, 57123

16 CFR

305.....53163, 53165
1000.....53167
Proposed Rules:
313.....54186
436.....53946

17 CFR

146.....53559
200.....55180, 57438
240.....53560
275.....57438
279.....57438
Proposed Rules:
30.....53946
210.....54189
240.....54189

18 CFR

385.....57088
Proposed Rules:
1304.....56821

19 CFR

4.....56788
10.....53565
12.....53565
18.....53565
24.....53565, 56790
111.....53565
113.....53565
114.....53565
125.....53565
134.....53565
145.....53565
162.....53565
171.....53565
172.....53565
178.....56788

20 CFR

404.....54747
416.....54747
655.....57092

21 CFR

7.....56468
10.....56468
14.....56468
19.....56468
25.....56468
101.....54686, 56468
107.....56468
110.....56468
114.....56468
170.....56468
203.....56480
205.....56480
310.....56468
312.....56468
314.....56468
316.....56468
500.....56468
510.....54147, 55460
514.....56468
520.....53581
573.....53167
558 .....53581, 53582, 53583, 54147, 54410, 54411, 55883
601.....56468
803.....56468
814.....56468
860.....56468
Proposed Rules:
101.....56835
201.....56511
868.....57301
896.....57303
1310.....57577

22 CFR

22.....54148
40.....54412
42.....54412
203.....54790

24 CFR

5.....55134
401.....53899
888.....57658
903.....55134
982.....55134

25 CFR

Proposed Rules:
103.....53948
292.....55471

26 CFR

1 .....53584, 53901, 57092
25.....53587
602 .....53584, 56484, 57092
Proposed Rules:
1.....56835

27 CFR

270.....57544
275.....57544
290.....57544
295.....57544
296.....57544

28 CFR

Proposed Rules:
16.....53679
545.....56840
550.....56840, 57126

29 CFR

4022.....55894
4044.....55894
Proposed Rules:
5.....57270

30 CFR

218.....55187
917.....53909
931.....54791
Proposed Rules:
218.....55476
256.....55476
260.....55476
926.....57581, 57583
943.....54982

31 CFR

1.....56792
202.....55427
203.....55428
225.....55429
344.....55400
380.....55426

32 CFR

311.....53168
701.....53171
736.....53589
762.....53171
765.....53171
770.....53591
Proposed Rules:
326.....53902
651.....54348

33 CFR

100.....54150, 56484
117 .....54795, 54954, 56484, 56793
162.....53593
165 .....54152, 54153, 54795, 54797, 56484
167.....53911
401.....56488
Proposed Rules:
26.....56843
161.....56843
165.....56843

34 CFR

3.....57286
19.....57286
Proposed Rules:
303.....53808

36 CFR

51.....54155
230.....57547
242.....55190
1010.....55896
Proposed Rules:
7.....53208
293.....54190
800.....55928

37 CFR

Ch. 1.....56791
1 .....54604, 56366, 56791, 57024
3.....54604
5.....54604, 57024
10.....54604
Proposed Rules:
201.....54984
256.....54984
401.....54826

38 CFR

8.....54798
19.....55461
21.....55192

39 CFR

20.....55462, 56242
Proposed Rules:
111.....53212, 56511

40 CFR

9.....55810
51.....56245
52 .....53172, 53180, 53181, 53595, 53599, 53602, 54413, 55193, 55196, 55201, 55910, 56251, 56486, 56794, 56797
60.....56798
62.....53605
63 .....54419, 55810, 56798
80.....53185, 54423
180 .....55911, 55921, 56253, 57549
260.....56798
261.....54955, 56798
264.....56798
265.....567980
266.....56798
270.....56798
271.....56798, 57287
300.....56258
Proposed Rules:
50.....54828
51.....56844
52 .....53214, 53680, 53962, 54820, 55205, 56278, 56284, 56856, 57127
62.....53680
63 .....55332, 55489, 55491
80.....53215, 54447
81.....54828
85.....56844
141.....55362
146.....53218
148.....55684
152.....55929, 57585
156.....57585
174.....55929
260.....56287
261.....55684, 56287

268.....55684, 56287
271 .....55684, 56287, 56288, 57307
300.....54190, 56288
302.....55684
372.....53681

41 CFR

101-16.....54965
102-5.....54965
Ch. 301 53470

42 CFR

36.....53914
36a.....53914
447.....55076
457.....55076
Proposed Rules:
52h.....57132
405.....53963
410.....55078
414.....55078

43 CFR

Proposed Rules:
3600.....55864
3610.....55864
3620.....55864

44 CFR

Ch. I 53914
65.....53915
67.....53917
295.....53914
Proposed Rules:
67.....53964

45 CFR

2543.....53608

46 CFR

Proposed Rules:
401.....55206

47 CFR

Ch. I 55923
1 .....53610, 54799, 56261
2.....54155
11.....53610, 54155
15.....57557
21.....53610
24.....53624
25.....53610, 54155
27.....57267
51.....54433, 57291
52.....53189
64.....54799
73 .....53610, 53638, 53639, 53640, 54176, 54804, 54805, 55924, 55925, 55926, 56799, 56800
74.....53610, 54155
76.....53610
78.....54155
79 .....54176, 54805, 56801
90.....53641
95.....53190
100.....53610
101.....54155
Proposed Rules:
20.....56752, 56757
27.....57266
73 .....53690, 53973, 53974, 54192, 54832, 54833, 55930, 56857, 56858
90.....55931

48 CFR

209.....54988
1503.....57101
1552.....57101
1828.....54439
1845.....54813
1852.....54439, 54813
Proposed Rules:
2.....54940
13.....54936
22.....54104
25.....54936
31.....54940
32.....56454
35.....54940
52 .....54104, 54936, 56454
204.....54985
213.....56858
442.....54986
1811.....56859

49 CFR

192.....54441
195.....54441
593.....56489
594.....56497
Proposed Rules:
23.....54454
26.....54454
385.....56521
386.....56521
565.....53219
571.....55212
1244.....54471

50 CFR

17.....54177, 57242
20 .....53190, 53492, 53936
25.....56396
32.....56396
100.....55190
300.....54969
600.....53646
622 .....55203, 56500, 56801
635.....54970
648 .....53648, 53940, 55926
660 .....53646, 53648, 54178, 54817, 56801
679 .....53197, 53198, 54179, 54180, 54971, 56502
Proposed Rules:
17 .....53222, 53691, 53974, 54472, 54892, 56530, 57136
20.....57566
600.....54833
622.....54474, 57158
648.....54987
660 .....53692, 54475, 55214, 55495, 57308
679.....56860

REMINDERS

The items in this list were editorially compiled as an aid to Federal Register users. Inclusion or exclusion from this list has no legal significance.

RULES GOING INTO EFFECT SEPTEMBER 25, 2000

AGRICULTURE DEPARTMENT

Animal and Plant Health Inspection Service

Exportation and importation of animals and animal products:

Bovine spongiform encephalopathy; disease status change—

Denmark; published 8-24-00

Plant-related quarantine, domestic:

Melon fruit fly; published 9-25-00

AGRICULTURE DEPARTMENT

Forest Service

State and private forestry assistance; Urban and Community Forestry Assistance Program; published 9-25-00

AGRICULTURE DEPARTMENT

Natural Resources Conservation Service

Support activities:

Prime and unique farmlands; important farmlands inventory; published 9-25-00

AGRICULTURE DEPARTMENT

Rural Utilities Service

Electric loans:

Minimum Times Interest Earned Ratio (TIER) requirements; reduction; published 8-25-00

Telecommunications standards and specifications:

Materials, equipment, and construction—

Special equipment contract (including installation); published 8-25-00

COMMODITY FUTURES TRADING COMMISSION

Commodity Exchange Act:

Futures commission merchants and introducing brokers; minimum financial requirements

Subordination agreements; net capital treatment; published 8-24-00

DEFENSE DEPARTMENT

Federal Acquisition Regulation (FAR):

Deferred research and development costs; published 7-26-00

Liquidated damages; published 7-26-00

Reporting requirements repeal; published 7-26-00

Time-and-materials or labor-hours; published 7-26-00

ENERGY DEPARTMENT

Federal Energy Regulatory Commission

Natural gas companies (Natural Gas Act):

Section 7 new service applications; optional certificate and abandonment procedures; published 7-26-00

Practice and procedure:

Well category determinations; published 7-26-00

ENVIRONMENTAL PROTECTION AGENCY

Air quality implementation plans; approval and promulgation; various States:

Maryland; published 7-25-00

Pennsylvania; published 7-26-00

Texas; published 7-26-00

Pesticides; emergency exemptions, etc.:

Mefenoxam; published 9-25-00

FEDERAL COMMUNICATIONS COMMISSION

Radio frequency devices:

Spread spectrum devices; published 9-25-00

GENERAL SERVICES ADMINISTRATION

Federal Acquisition Regulation (FAR):

Deferred research and development costs; published 7-26-00

Liquidated damages; published 7-26-00

Reporting requirements repeal; published 7-26-00

Time-and-materials or labor-hours; published 7-26-00

NATIONAL AERONAUTICS AND SPACE ADMINISTRATION

Federal Acquisition Regulation (FAR):

Deferred research and development costs; published 7-26-00

Liquidated damages; published 7-26-00

Reporting requirements repeal; published 7-26-00

Time-and-materials or labor-hours; published 7-26-00

SECURITIES AND EXCHANGE COMMISSION

Securities:

Subsidiary issuers and guarantors; financial statements and periodic reports; published 8-24-00

TRANSPORTATION DEPARTMENT

Federal Aviation Administration

Airworthiness directives:

Airbus; published 8-21-00

Boeing; published 8-21-00

McDonnell Douglas; published 8-21-00

TREASURY DEPARTMENT

Alcohol, Tobacco and Firearms Bureau

Alcohol, tobacco, and other excise taxes:

Tobacco products—

Roll-your-own tobacco; manufacturer permit requirements; published 9-25-00

COMMENTS DUE NEXT WEEK

AGRICULTURE DEPARTMENT

Animal and Plant Health Inspection Service

Animal welfare:

Inspection, licensing, and procurement of animals; comments due by 10-3-00; published 8-4-00

Interstate transportation of animals and animal products (quarantine):

Brucellosis in cattle and bison—

State and area classifications; comments due by 10-2-00; published 8-3-00

AGRICULTURE DEPARTMENT

Farm Service Agency

Grants:

Loan and grant program funds; allocation methodology and formulas; comments due by 10-2-00; published 8-3-00

AGRICULTURE DEPARTMENT

Food Safety and Inspection Service

Meat and poultry inspection:

Partial quality control requirements elimination

Scales certification; comments due by 10-3-00; published 9-18-00

AGRICULTURE DEPARTMENT

Grain Inspection, Packers and Stockyards Administration

Swine packer marketing contracts; comments due by 10-5-00; published 9-5-00

AGRICULTURE DEPARTMENT

Rural Business-Cooperative Service

Grants:

Loan and grant program funds; allocation methodology and formulas; comments due by 10-2-00; published 8-3-00

AGRICULTURE DEPARTMENT

Rural Housing Service

Grants:

Loan and grant program funds; allocation methodology and formulas; comments due by 10-2-00; published 8-3-00

AGRICULTURE DEPARTMENT

Rural Utilities Service

Grants:

Loan and grant program funds; allocation methodology and formulas; comments due by 10-2-00; published 8-3-00

COMMERCE DEPARTMENT

National Oceanic and Atmospheric Administration

Fishery conservation and management:

Alaska; fisheries of Exclusive Economic Zone—

Prohibited species donation program; comments due by 10-5-00; published 9-20-00

West Coast States and Western Pacific fisheries—

Pacific whiting; comments due by 10-5-00; published 9-20-00

CONSUMER PRODUCT SAFETY COMMISSION

Dive sticks; comments due by 10-2-00; published 7-19-00

DEFENSE DEPARTMENT

Privacy Act; implementation; comments due by 10-6-00; published 8-7-00

ENVIRONMENTAL PROTECTION AGENCY

Air pollutants, hazardous; national emission standards:

Radionuclides other than radon from DOE facilities and from Federal facilities other than NRC licensees and not covered by Subpart H; comments due by 10-6-00; published 8-21-00

Air programs:

Fuels and fuel additives—

Reformulated gasoline program; alternative analytical test methods use; comments due by 10-2-00; published 9-1-00

Reformulated gasoline program; alternative analytical test methods use; comments due by 10-2-00; published 9-1-00

Air programs; approval and promulgation; State plans for designated facilities and pollutants:

Maryland; comments due by 10-5-00; published 9-5-00

Maryland; comments due by 10-5-00; published 9-5-00

Air quality implementation plans; approval and promulgation; various States:

Arizona; comments due by 10-6-00; published 9-6-00

California; comments due by 10-5-00; published 9-5-00

Illinois; comments due by 10-2-00; published 8-31-00

Maryland; comments due by 10-2-00; published 9-1-00

Texas; comments due by 10-2-00; published 9-1-00

Air quality implementation plans; approval and promulgation, various States:

Texas; comments due by 10-2-00; published 9-1-00

Air quality implementation plans; approval and promulgation; various States:

Texas; comments due by 10-5-00; published 9-5-00

Air quality implementation plans; √A√approval and promulgation; various States; air quality planning purposes; designation of areas:

Oregon; comments due by 10-2-00; published 8-31-00

Grants and other Federal assistance:

State and local assistance—

Drinking water State revolving funds; comments due by 10-6-00; published 8-7-00

Superfund program:

National oil and hazardous substances contingency plan—

National priorities list update; comments due by 10-2-00; published 8-31-00

National priorities list update; comments due by 10-2-00; published 8-31-00

FEDERAL COMMUNICATIONS COMMISSION

Radio stations; table of assignments:

Michigan; comments due by 10-2-00; published 8-24-00

Nevada; comments due by 10-2-00; published 8-24-00

New Hampshire; comments due by 10-2-00; published 8-24-00

FEDERAL DEPOSIT INSURANCE CORPORATION

Federal Deposit Insurance Act:

Depository institution insurance sales; consumer protections; comments due by 10-5-00; published 8-21-00

FEDERAL RESERVE SYSTEM

Federal Deposit Insurance Act:

Depository institution insurance sales; consumer protections; comments due by 10-5-00; published 8-21-00

HEALTH AND HUMAN SERVICES DEPARTMENT

Health Care Financing Administration

Medicare:

Hospital outpatient services; prospective payment system

Prospective payment system-exempt facilities; provider-based location criteria revision; comments due by 10-2-00; published 8-3-00

INTERIOR DEPARTMENT

Indian Affairs Bureau

Financial activities:

Alaska Resupply Operation; comments due by 10-2-00; published 8-3-00

INTERIOR DEPARTMENT

Fish and Wildlife Service

Endangered and threatened species:

Desert yellowhead; comments due by 10-5-00; published 9-5-00

INTERIOR DEPARTMENT

Minerals Management Service

Outer Continental Shelf; oil, gas, and sulphur operations:

Decommissioning activities; comments due by 10-5-00; published 7-7-00

JUSTICE DEPARTMENT

Privacy Act; implementation; comments due by 10-5-00; published 9-5-00

NUCLEAR REGULATORY COMMISSION

Domestic licensing proceedings and issuance of orders; practice rules:

High-level radioactive waste disposal at geologic repository; licensing support network; design standards for participating websites; comments due by 10-6-00; published 8-22-00

POSTAL SERVICE

Domestic Mail Manual:

Free matter for blind and other physically handicapped persons; eligibility standards; comments due by 10-2-00; published 9-1-00

Rate, fee and classification changes; comments due by 10-2-00; published 8-29-00

TRANSPORTATION DEPARTMENT

Coast Guard

Inland navigation rules:

Navigation lights for uninspected commercial and recreational vessels; certification; comments due by 10-3-00; published 8-4-00

Ports and waterway safety:

Notification of arrival; addition of charterer or cargo owner to required information; comments due by 10-2-00; published 8-18-00

TRANSPORTATION DEPARTMENT

Federal Aviation Administration

Administrative regulations:

Air traffic and related services for aircraft that transit U.S.-controlled airspace but neither take off from, nor land in, U.S.; fees; comments due by 10-4-00; published 6-6-00

Airworthiness directives:

Boeing; comments due by 10-2-00; published 8-1-00

Class E airspace; comments due by 10-2-00; published 8-31-00

Class E airspace; correction; comments due by 10-4-00; published 8-30-00

Procedural rules:

Flight Operational Quality Assurance Program; voluntary implementation; comments due by 10-3-00; published 7-5-00

TRANSPORTATION DEPARTMENT

Federal Highway Administration

Engineering and traffic operations:

Transportation Equity Act for 21st Century; implementation—

Federal-aid project authorization and agreements; comments due by 10-2-00; published 8-31-00

TREASURY DEPARTMENT

Comptroller of the Currency

Federal Deposit Insurance Act:

Depository institution insurance sales; consumer protections; comments due by 10-5-00; published 8-21-00

TREASURY DEPARTMENT

Thrift Supervision Office

Federal Deposit Insurance Act:

Depository institution insurance sales; consumer protections; comments due by 10-5-00; published 8-21-00

VETERANS AFFAIRS DEPARTMENT

Disabilities rating schedule:

Liver disabilities; comments due by 10-6-00; published 8-7-00

Loan guaranty:

Net value and pre-foreclosure debt waivers; comments due by 10-2-00; published 8-1-00

LIST OF PUBLIC LAWS

This is a continuing list of public bills from the current session of Congress which have become Federal laws. It may be used in conjunction with ''P L U S'' (Public Laws Update Service) on 202–523–6641. This list is also available online at http://www.nara.gov/fedreg.

The text of laws is not published in the **Federal Register** but may be ordered in ''slip law'' (individual pamphlet) form from the Superintendent of Documents, U.S. Government Printing

Office, Washington, DC 20402 (phone, 202–512–1808). The text will also be made available on the Internet from GPO Access at http://www.access.gpo.gov/nara/index.html. Some laws may not yet be available.

H.R. 4040/P.L. 106–265

To amend title 5, United States Code, to provide for the establishment of a program under which long-term care insurance is made available to Federal employees, members of the uniformed services, and civilian and military retirees, provide for the correction of retirement coverage errors under chapters 83 and 84 of such title, and for other purposes. (Sept. 19, 2000; 114 Stat. 762)

Last List August 23, 2000

Public Laws Electronic Notification Service (PENS)

PENS is a free electronic mail notification service of newly enacted public laws. To subscribe, go to www.gsa.gov/archives/publaws-l.html or send E-mail to **listserv@www.gsa.gov** with the following text message:

SUBSCRIBE PUBLAWS-L Your Name.

Note: This service is strictly for E-mail notification of new laws. The text of laws is not available through this service. **PENS** cannot respond to specific inquiries sent to this address.

CFR CHECKLIST

This checklist, prepared by the Office of the Federal Register, is published weekly. It is arranged in the order of CFR titles, stock numbers, prices, and revision dates.

An asterisk (*) precedes each entry that has been issued since last week and which is now available for sale at the Government Printing Office.

A checklist of current CFR volumes comprising a complete CFR set, also appears in the latest issue of the LSA (List of CFR Sections Affected), which is revised monthly.

The CFR is available free on-line through the Government Printing Office's GPO Access Service at http://www.access.gpo.gov/nara/cfr/index.html. For information about GPO Access call the GPO User Support Team at 1-888-293-6498 (toll free) or 202-512-1530.

The annual rate for subscription to all revised paper volumes is $951.00 domestic, $237.75 additional for foreign mailing.

Mail orders to the Superintendent of Documents, Attn: New Orders, P.O. Box 371954, Pittsburgh, PA 15250–7954. All orders must be accompanied by remittance (check, money order, GPO Deposit Account, VISA, Master Card, or Discover). Charge orders may be telephoned to the GPO Order Desk, Monday through Friday, at **(202) 512–1800** from 8:00 a.m. to 4:00 p.m. eastern time, or FAX your charge orders to **(202) 512-2250**.

Title	Stock Number	Price	Revision Date
1, 2 (2 Reserved)	(869–038–00001–3)	6.50	Apr. 1, 2000
3 (1997 Compilation and Parts 100 and 101)	(869–042–00002–1)	22.00	[1] Jan. 1, 2000
4	(869–042–00003–0)	8.50	Jan. 1, 2000
5 Parts:			
1–699	(869–042–00004–8)	43.00	Jan. 1, 2000
700–1199	(869–042–00005–6)	31.00	Jan. 1, 2000
1200–End, 6 (6 Reserved)	(869–042–00006–4)	48.00	Jan. 1, 2000
7 Parts:			
1–26	(869–042–00007–2)	28.00	Jan. 1, 2000
27–52	(869–042–00008–1)	35.00	Jan. 1, 2000
53–209	(869–042–00009–9)	22.00	Jan. 1, 2000
210–299	(869–042–00010–2)	54.00	Jan. 1, 2000
300–399	(869–042–00011–1)	29.00	Jan. 1, 2000
400–699	(869–042–00012–9)	41.00	Jan. 1, 2000
700–899	(869–042–00013–7)	37.00	Jan. 1, 2000
900–999	(869–042–00014–5)	46.00	Jan. 1, 2000
1000–1199	(869–042–00015–3)	18.00	Jan. 1, 2000
1200–1599	(869–042–00016–1)	44.00	Jan. 1, 2000
1600–1899	(869–042–00017–0)	61.00	Jan. 1, 2000
1900–1939	(869–042–00018–8)	21.00	Jan. 1, 2000
1940–1949	(869–042–00019–6)	37.00	Jan. 1, 2000
1950–1999	(869–042–00020–0)	38.00	Jan. 1, 2000
2000–End	(869–042–00021–8)	31.00	Jan. 1, 2000
8	(869–042–00022–6)	41.00	Jan. 1, 2000
9 Parts:			
1–199	(869–042–00023–4)	46.00	Jan. 1, 2000
200–End	(869–042–00024–2)	44.00	Jan. 1, 2000
10 Parts:			
1–50	(869–042–00025–1)	46.00	Jan. 1, 2000
51–199	(869–042–00026–9)	38.00	Jan. 1, 2000
200–499	(869–042–00027–7)	38.00	Jan. 1, 2000
500–End	(869–042–00028–5)	48.00	Jan. 1, 2000
11	(869–042–00029–3)	23.00	Jan. 1, 2000
12 Parts:			
1–199	(869–042–00030–7)	18.00	Jan. 1, 2000
200–219	(869–042–00031–5)	22.00	Jan. 1, 2000
220–299	(869–042–00032–3)	45.00	Jan. 1, 2000
300–499	(869–042–00033–1)	29.00	Jan. 1, 2000
500–599	(869–042–00034–0)	26.00	Jan. 1, 2000
600–End	(869–042–00035–8)	53.00	Jan. 1, 2000
13	(869–042–00036–6)	35.00	Jan. 1, 2000
14 Parts:			
1–59	(869–042–00037–4)	58.00	Jan. 1, 2000
60–139	(869–042–00038–2)	46.00	Jan. 1, 2000
140–199	(869–038–00039–1)	17.00	[4] Jan. 1, 2000
200–1199	(869–042–00040–4)	29.00	Jan. 1, 2000
1200–End	(869–042–00041–2)	25.00	Jan. 1, 2000
15 Parts:			
0–299	(869–042–00042–1)	28.00	Jan. 1, 2000
300–799	(869–042–00043–9)	45.00	Jan. 1, 2000
800–End	(869–042–00044–7)	26.00	Jan. 1, 2000
16 Parts:			
0–999	(869–042–00045–5)	33.00	Jan. 1, 2000
1000–End	(869–042–00046–3)	43.00	Jan. 1, 2000
17 Parts:			
1–199	(869–042–00048–0)	32.00	Apr. 1, 2000
200–239	(869–042–00049–8)	38.00	Apr. 1, 2000
240–End	(869–042–00050–1)	49.00	Apr. 1, 2000
18 Parts:			
1–399	(869–042–00051–0)	54.00	Apr. 1, 2000
400–End	(869–042–00052–8)	15.00	Apr. 1, 2000
19 Parts:			
1–140	(869–042–00053–6)	40.00	Apr. 1, 2000
141–199	(869–042–00054–4)	40.00	Apr. 1, 2000
200–End	(869–042–00055–2)	20.00	Apr. 1, 2000
20 Parts:			
1–399	(869–042–00056–1)	33.00	Apr. 1, 2000
400–499	(869–042–00057–9)	56.00	Apr. 1, 2000
500–End	(869–042–00058–7)	58.00	[7] Apr. 1, 2000
21 Parts:			
1–99	(869–042–00059–5)	26.00	Apr. 1, 2000
100–169	(869–042–00060–9)	30.00	Apr. 1, 2000
170–199	(869–042–00061–7)	29.00	Apr. 1, 2000
200–299	(869–042–00062–5)	13.00	Apr. 1, 2000
300–499	(869–042–00063–3)	20.00	Apr. 1, 2000
500–599	(869–042–00064–1)	31.00	Apr. 1, 2000
600–799	(869–038–00065–0)	10.00	Apr. 1, 2000
800–1299	(869–042–00066–8)	38.00	Apr. 1, 2000
1300–End	(869–042–00067–6)	15.00	Apr. 1, 2000
22 Parts:			
1–299	(869–042–00068–4)	54.00	Apr. 1, 2000
300–End	(869–042–00069–2)	31.00	Apr. 1, 2000
23	(869–042–00070–6)	29.00	Apr. 1, 2000
24 Parts:			
0–199	(869–042–00071–4)	40.00	Apr. 1, 2000
200–499	(869–042–00072–2)	37.00	Apr. 1, 2000
500–699	(869–042–00073–1)	20.00	Apr. 1, 2000
700–1699	(869–042–00074–9)	46.00	Apr. 1, 2000
1700–End	(869–042–00075–7)	18.00	[5] Apr. 1, 2000
25	(869–042–00076–5)	52.00	Apr. 1, 2000
26 Parts:			
§§ 1.0-1–1.60	(869–042–00077–3)	31.00	Apr. 1, 2000
§§ 1.61–1.169	(869–042–00078–1)	56.00	Apr. 1, 2000
§§ 1.170–1.300	(869–042–00079–0)	38.00	Apr. 1, 2000
§§ 1.301–1.400	(869–042–00080–3)	29.00	Apr. 1, 2000
§§ 1.401–1.440	(869–042–00081–1)	47.00	Apr. 1, 2000
§§ 1.441-1.500	(869-042-00082-0)	36.00	Apr. 1, 2000
§§ 1.501–1.640	(869–042–00083–8)	32.00	Apr. 1, 2000
§§ 1.641–1.850	(869–042–00084–6)	41.00	Apr. 1, 2000
§§ 1.851–1.907	(869–042–00085–4)	43.00	Apr. 1, 2000
§§ 1.908–1.1000	(869–042–00086–2)	41.00	Apr. 1, 2000
§§ 1.1001–1.1400	(869–042–00087–1)	45.00	Apr. 1, 2000
§§ 1.1401–End	(869–042–00088–9)	66.00	Apr. 1, 2000
2–29	(869–042–00089–7)	45.00	Apr. 1, 2000
30–39	(869–042–00090–1)	31.00	Apr. 1, 2000
40–49	(869–042–00091–9)	18.00	Apr. 1, 2000
50–299	(869–042–00092–7)	23.00	Apr. 1, 2000
300–499	(869–042–00093–5)	43.00	Apr. 1, 2000
500–599	(869–042–00094–3)	12.00	Apr. 1, 2000
600–End	(869–042–00095–1)	12.00	Apr. 1, 2000
27 Parts:			
1–199	(869–042–00096–0)	59.00	Apr. 1, 2000

Title	Stock Number	Price	Revision Date
200–End	(869–042–00097–8)	18.00	Apr. 1, 2000
28 Parts:			
0-42	(869–038–00098–9)	39.00	July 1, 1999
*43-end	(869-042-00099-4)	36.00	July 1, 2000
29 Parts:			
0–99	(869–042–00100–1)	33.00	July 1, 2000
100–499	(869–038–00101–2)	13.00	July 1, 1999
500–899	(869–038–00102–1)	40.00	[7] July 1, 1999
900–1899	(869–042–00103–6)	24.00	July 1, 2000
1900–1910 (§§ 1900 to 1910.999)	(869–042–00104–4)	46.00	[6] July 1, 2000
1910 (§§ 1910.1000 to end)	(869–042–00105–2)	28.00	[6] July 1, 2000
*1911–1925	(869–042–00106–1)	20.00	July 1, 2000
1926	(869–042–00107–9)	30.00	[6] July 1, 2000
1927–End	(869–038–00108–0)	43.00	July 1, 1999
30 Parts:			
1–199	(869–038–00109–8)	35.00	July 1, 1999
200–699	(869–042–00110–9)	33.00	July 1, 2000
*700–End	(869–042–00111–7)	39.00	July 1, 2000
31 Parts:			
0–199	(869–038–00112–8)	21.00	July 1, 1999
200–End	(869–038–00113–6)	48.00	July 1, 1999
32 Parts:			
1–39, Vol. I		15.00	[2] July 1, 1984
1–39, Vol. II		19.00	[2] July 1, 1984
1–39, Vol. III		18.00	[2] July 1, 1984
1–190	(869–038–00114–4)	46.00	July 1, 1999
191–399	(869–038–00115–2)	55.00	July 1, 1999
400–629	(869–038–00116–1)	32.00	July 1, 1999
*630–699	(869–042–00117–6)	25.00	July 1, 2000
700–799	(869–042–00118–4)	31.00	July 1, 2000
800–End	(869–038–00119–5)	27.00	July 1, 1999
33 Parts:			
1–124	(869–038–00120–9)	32.00	July 1, 1999
125–199	(869–038–00121–7)	41.00	July 1, 1999
200–End	(869–038–00122–5)	33.00	July 1, 1999
34 Parts:			
1–299	(869–038–00123–3)	28.00	July 1, 1999
*300–399	(869–042–00124–9)	28.00	July 1, 2000
400–End	(869–038–00125–0)	46.00	July 1, 1999
35	(869–042–00126–5)	10.00	July 1, 2000
36 Parts			
1–199	(869–042–00127–3)	24.00	July 1, 2000
200–299	(869–042–00128–1)	24.00	July 1, 2000
300–End	(869–038–00129–2)	38.00	July 1, 1999
37	(869–038–00130–6)	29.00	July 1, 1999
38 Parts:			
0–17	(869–038–00131–4)	37.00	July 1, 1999
*18–End	(869–042–00132–0)	47.00	July 1, 2000
39	(869–042–00133–8)	28.00	July 1, 2000
40 Parts:			
*1–49	(869–042–00134–6)	37.00	July 1, 2000
50–51	(869–038–00135–7)	25.00	July 1, 1999
52 (52.01–52.1018)	(869–038–00136–5)	33.00	July 1, 1999
52 (52.1019–End)	(869–038–00137–3)	37.00	July 1, 1999
53–59	(869–038–00138–1)	19.00	July 1, 1999
60	(869–038–00139–0)	59.00	July 1, 1999
61–62	(869–038–00140–3)	19.00	July 1, 1999
63 (63.1–63.1119)	(869–038–00141–1)	58.00	July 1, 1999
63 (63.1200–End)	(869–038–00142–0)	36.00	July 1, 1999
64–71	(869–042–00143–5)	12.00	July 1, 2000
72–80	(869–038–00144–6)	41.00	July 1, 1999
81–85	(869–038–00145–4)	33.00	July 1, 1999
86	(869–038–00146–2)	59.00	July 1, 1999
87-135	(869–038–00146–1)	53.00	July 1, 1999
136–149	(869–038–00148–9)	40.00	July 1, 1999
150–189	(869–038–00149–7)	35.00	July 1, 1999
190–259	(869–042–00150–8)	25.00	July 1, 2000
260–265	(869–038–00151–9)	32.00	July 1, 1999
266–299	(869–038–00152–7)	33.00	July 1, 1999
300–399	(869–038–00153–5)	26.00	July 1, 1999
*400–424	(869–042–00154–1)	37.00	July 1, 2000
425–699	(869–038–00155–1)	44.00	July 1, 1999
700–789	(869–038–00156–0)	42.00	July 1, 1999
790–End	(869–042–00157–5)	23.00	[6] July 1, 2000
41 Chapters:			
1, 1–1 to 1–10		13.00	[3] July 1, 1984
1, 1–11 to Appendix, 2 (2 Reserved)		13.00	[3] July 1, 1984
3–6		14.00	[3] July 1, 1984
7		6.00	[3] July 1, 1984
8		4.50	[3] July 1, 1984
9		13.00	[3] July 1, 1984
10–17		9.50	[3] July 1, 1984
18, Vol. I, Parts 1–5		13.00	[3] July 1, 1984
18, Vol. II, Parts 6–19		13.00	[3] July 1, 1984
18, Vol. III, Parts 20–52		13.00	[3] July 1, 1984
19–100		13.00	[3] July 1, 1984
1–100	(869–038–00158–6)	14.00	July 1, 1999
101	(869–038–00159–4)	39.00	July 1, 1999
102–200	(869–038–00160–8)	16.00	July 1, 1999
201–End	(869–038–00161–6)	15.00	July 1, 1999
42 Parts:			
1–399	(869–038–00162–4)	36.00	Oct. 1, 1999
400–429	(869–038–00163–2)	44.00	Oct. 1, 1999
430–End	(869–038–00164–1)	54.00	Oct. 1, 1999
43 Parts:			
1–999	(869–038–00165–9)	32.00	Oct. 1, 1999
1000–end	(869–038–00166–7)	47.00	Oct. 1, 1999
44	(869–038–00167–5)	28.00	Oct. 1, 1999
45 Parts:			
1–199	(869–038–00168–3)	33.00	Oct. 1, 1999
200–499	(869–038–00169–1)	16.00	Oct. 1, 1999
500–1199	(869–038–00170–5)	30.00	Oct. 1, 1999
1200–End	(869–038–00171–3)	40.00	Oct. 1, 1999
46 Parts:			
1–40	(869–038–00172–1)	27.00	Oct. 1, 1999
41–69	(869–038–00173–0)	23.00	Oct. 1, 1999
70–89	(869–038–00174–8)	8.00	Oct. 1, 1999
90–139	(869–038–00175–6)	26.00	Oct. 1, 1999
140–155	(869–038–00176–4)	15.00	Oct. 1, 1999
156–165	(869–038–00177–2)	21.00	Oct. 1, 1999
166–199	(869–038–00178–1)	27.00	Oct. 1, 1999
200–499	(869–038–00179–9)	23.00	Oct. 1, 1999
500–End	(869–038–00180–2)	15.00	Oct. 1, 1999
47 Parts:			
0–19	(869–038–00181–1)	39.00	Oct. 1, 1999
20–39	(869–038–00182–9)	26.00	Oct. 1, 1999
40–69	(869–038–00183–7)	26.00	Oct. 1, 1999
70–79	(869–038–00184–5)	39.00	Oct. 1, 1999
80–End	(869–038–00185–3)	40.00	Oct. 1, 1999
48 Chapters:			
1 (Parts 1–51)	(869–038–00186–1)	55.00	Oct. 1, 1999
1 (Parts 52–99)	(869–038–00187–0)	30.00	Oct. 1, 1999
2 (Parts 201–299)	(869–038–00188–8)	36.00	Oct. 1, 1999
3–6	(869–038–00189–6)	27.00	Oct. 1, 1999
7–14	(869–038–00190–0)	35.00	Oct. 1, 1999
15–28	(869–038–00191–8)	36.00	Oct. 1, 1999
29–End	(869–038–00192–6)	25.00	Oct. 1, 1999
49 Parts:			
1–99	(869–038–00193–4)	34.00	Oct. 1, 1999
100–185	(869–038–00194–2)	53.00	Oct. 1, 1999
186–199	(869–038–00195–1)	13.00	Oct. 1, 1999
200–399	(869–038–00196–9)	53.00	Oct. 1, 1999
400–999	(869–038–00197–7)	57.00	Oct. 1, 1999
1000–1199	(869–038–00198–5)	17.00	Oct. 1, 1999
1200–End	(869–038–00199–3)	14.00	Oct. 1, 1999
50 Parts:			
1–199	(869–038–00200–1)	43.00	Oct. 1, 1999
200–599	(869–038–00201–9)	22.00	Oct. 1, 1999

Title	Stock Number	Price	Revision Date
600–End	(869–038–00202–7)	37.00	Oct. 1, 1999
CFR Index and Findings Aids	(869–042–00047–1)	53.00	Jan. 1, 2000
Complete 1999 CFR set		951.00	1999
Microfiche CFR Edition:			
Subscription (mailed as issued)		290.00	1999
Individual copies		1.00	1999
Complete set (one-time mailing)		247.00	1997
Complete set (one-time mailing)		264.00	1996

[1] Because Title 3 is an annual compilation, this volume and all previous volumes should be retained as a permanent reference source.

[2] The July 1, 1985 edition of 32 CFR Parts 1–189 contains a note only for Parts 1–39 inclusive. For the full text of the Defense Acquisition Regulations in Parts 1–39, consult the three CFR volumes issued as of July 1, 1984, containing those parts.

[3] The July 1, 1985 edition of 41 CFR Chapters 1–100 contains a note only for Chapters 1 to 49 inclusive. For the full text of procurement regulations in Chapters 1 to 49, consult the eleven CFR volumes issued as of July 1, 1984 containing those chapters.

[4] No amendments to this volume were promulgated during the period January 1, 1999, through January 1, 2000. The CFR volume issued as of January 1, 1999 should be retained.

[5] No amendments to this volume were promulgated during the period April 1, 1999, through April 1, 2000. The CFR volume issued as of April 1, 1999 should be retained.

[6] No amendments to this volume were promulgated during the period July 1, 1999, through July 1, 2000. The CFR volume issued as of July 1, 1999 should be retained.

[7] No amendments to this volume were promulgated during the period July 1, 1998, through July 1, 1999. The CFR volume issued as of July 1, 1998, should be retained.